US010705268B2

(12) **United States Patent**
Fu et al.

(10) **Patent No.: US 10,705,268 B2**
(45) **Date of Patent: Jul. 7, 2020**

(54) **GAP FILL OF IMPRINTED STRUCTURE WITH SPIN COATED HIGH REFRACTIVE INDEX MATERIAL FOR OPTICAL COMPONENTS**

(71) Applicant: **Applied Materials, Inc.**, Santa Clara, CA (US)

(72) Inventors: **Jinxin Fu**, Fremont, CA (US); **Ludovic Godet**, Sunnyvale, CA (US); **Wayne McMillan**, San Jose, CA (US)

(73) Assignee: **Applied Materials, Inc.**, Santa Clara, CA (US)

(*) Notice: Subject to any disclaimer, the term of this patent is extended or adjusted under 35 U.S.C. 154(b) by 38 days.

(21) Appl. No.: **16/120,733**

(22) Filed: **Sep. 4, 2018**

(65) **Prior Publication Data**

US 2020/0003936 A1 Jan. 2, 2020

Related U.S. Application Data

(60) Provisional application No. 62/692,247, filed on Jun. 29, 2018.

(51) **Int. Cl.**

B29D 11/00	(2006.01)
G02B 5/18	(2006.01)
G03F 7/00	(2006.01)

(52) **U.S. Cl.**

CPC ..... ***G02B 5/1852*** (2013.01); ***B29D 11/00875*** (2013.01); ***G03F 7/0002*** (2013.01); (Continued)

(58) **Field of Classification Search**

None

See application file for complete search history.

(56) **References Cited**

U.S. PATENT DOCUMENTS

6,144,795	A *	11/2000	Dawes	C03B 19/12 385/141
2004/0076391	A1 *	4/2004	Ghoshal	G02B 1/046 385/123

(Continued)

FOREIGN PATENT DOCUMENTS

KR	10-2007-0036189	A	4/2007
KR	10-2012-0053318	A	5/2012

(Continued)

OTHER PUBLICATIONS

Lu, "Synthesis of PDMS-metal oxide hybrid nanocomposites using in situ sol-gel route", Michigan Technological University, 2012, pp. 1-203. (Year: 2012).*

(Continued)

Primary Examiner — Lisa L Herring

(74) *Attorney, Agent, or Firm* — Patterson + Sheridan LLP

(57) **ABSTRACT**

Embodiments of the present disclosure generally relate to a method for forming an optical component, for example, for a virtual reality or augmented reality display device. In one embodiment, the method includes forming a first layer on a substrate, and the first layer has a first refractive index. The method further includes pressing a stamp having a pattern onto the first layer, and the pattern of the stamp is transferred to the first layer to form a patterned first layer. The method further includes forming a second layer on the patterned first layer by spin coating, and the second layer has a second refractive index greater than the first refractive index. The second layer having the high refractive index is formed by spin coating, leading to improved nanoparticle uniformity in the second layer.

18 Claims, 7 Drawing Sheets

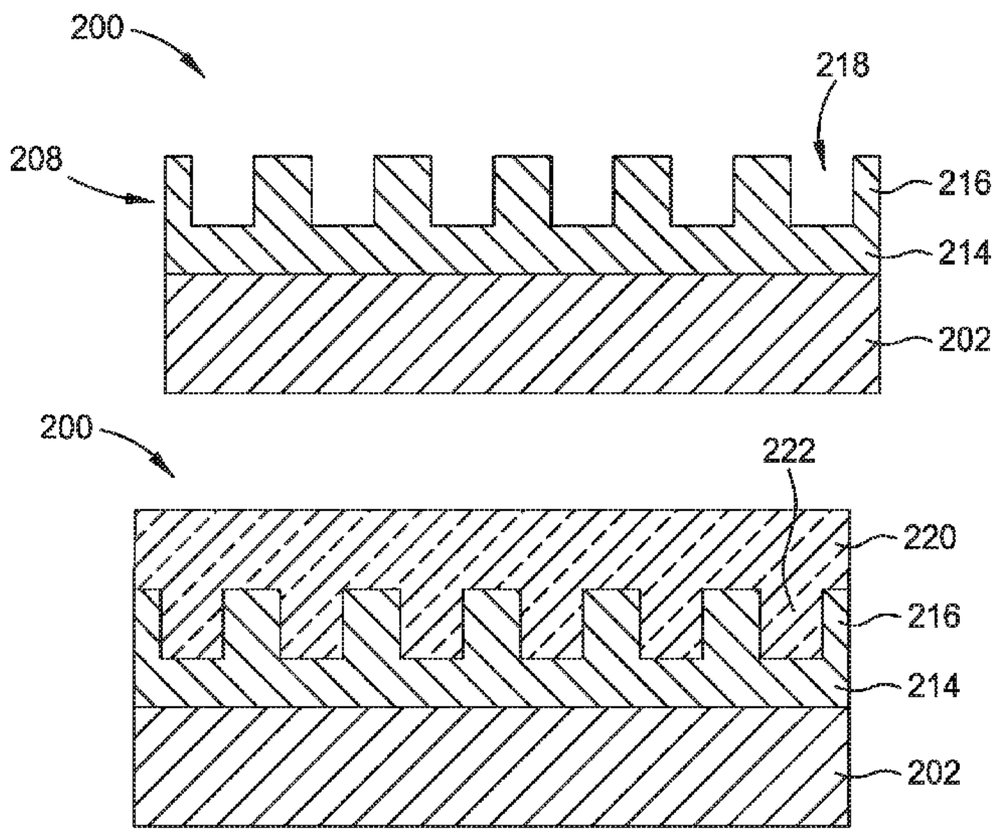

(52) **U.S. Cl.**
CPC ***G03F 7/0007*** (2013.01); *B29D 11/00759* (2013.01); *B29D 11/00884* (2013.01)

(56) **References Cited**

U.S. PATENT DOCUMENTS

2007/0107629	A1*	5/2007	Zheng	C08G 77/06 106/187.1
2019/0187342	A1*	6/2019	Hatakeyama	G02B 27/0172
2019/0369321	A1*	12/2019	Young	B29D 11/0075

FOREIGN PATENT DOCUMENTS

KR	10-2016-0025061	A	3/2016
KR	10-2017-0075900	A	7/2017
WO	2014/045595	A1	3/2014

OTHER PUBLICATIONS

PCT Notification of Transmittal of the International Search Report and the Written Opinion of the International Searching Authority for International Application No. PCT/US2019/033711; dated Aug. 29, 2019; 12 total pages.

* cited by examiner

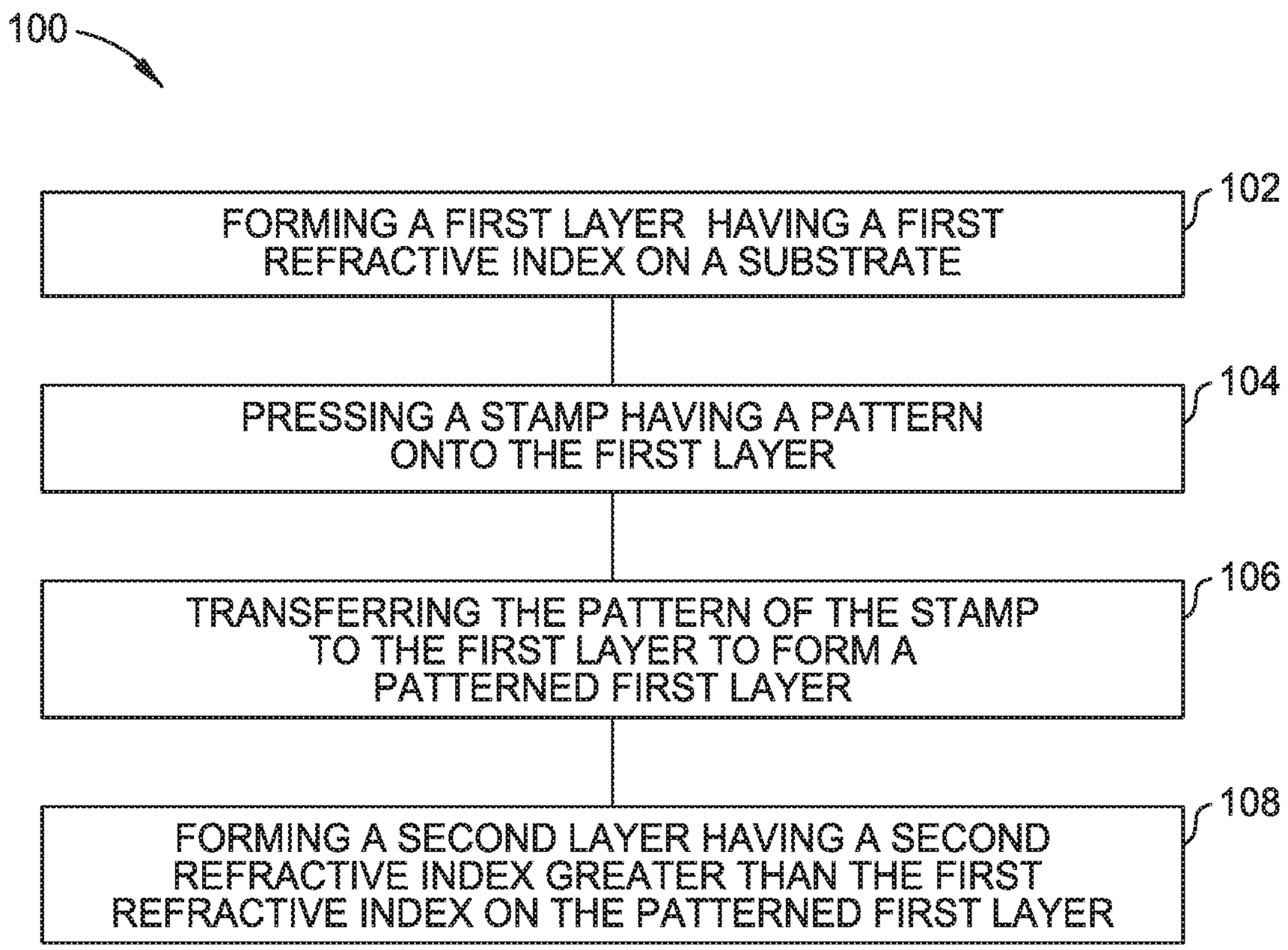
100
FORMING A FIRST LAYER HAVING A FIRST REFRACTIVE INDEX ON A SUBSTRATE
102
PRESSING A STAMP HAVING A PATTERN ONTO THE FIRST LAYER
104
TRANSFERRING THE PATTERN OF THE STAMP TO THE FIRST LAYER TO FORM A PATTERNED FIRST LAYER
106
FORMING A SECOND LAYER HAVING A SECOND REFRACTIVE INDEX GREATER THAN THE FIRST REFRACTIVE INDEX ON THE PATTERNED FIRST LAYER
108

FIG. 1

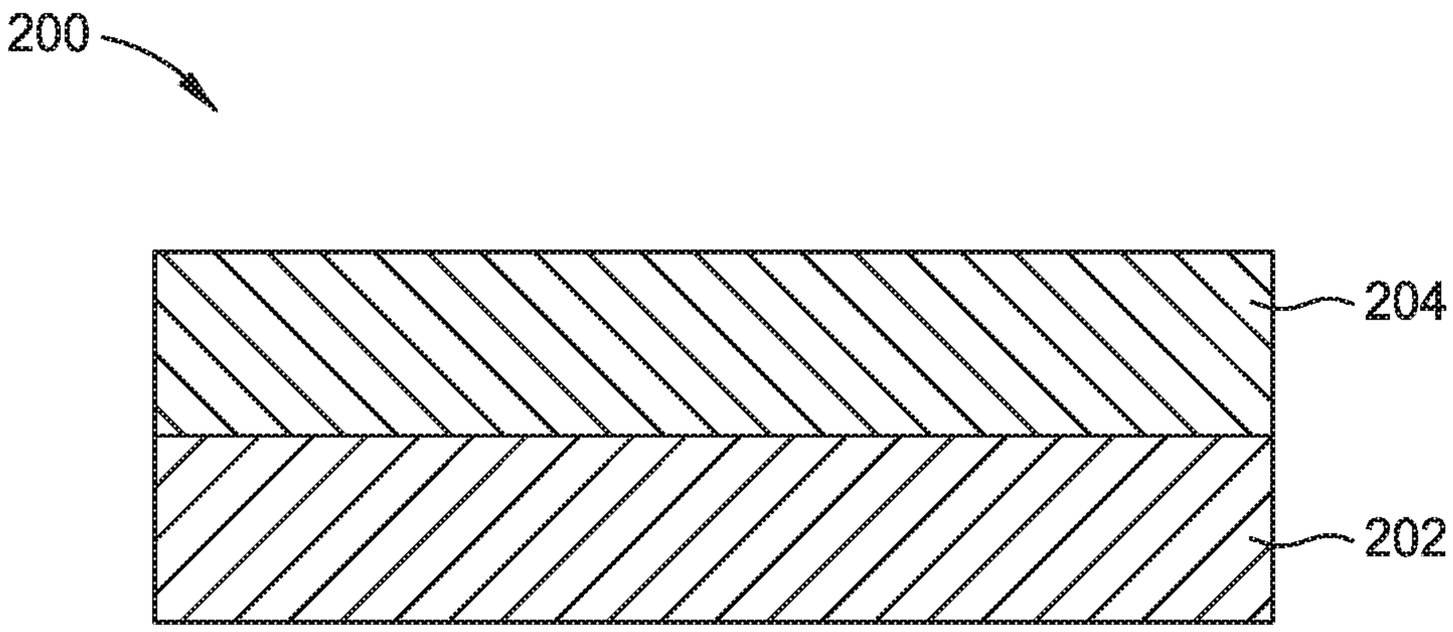

FIG. 2A

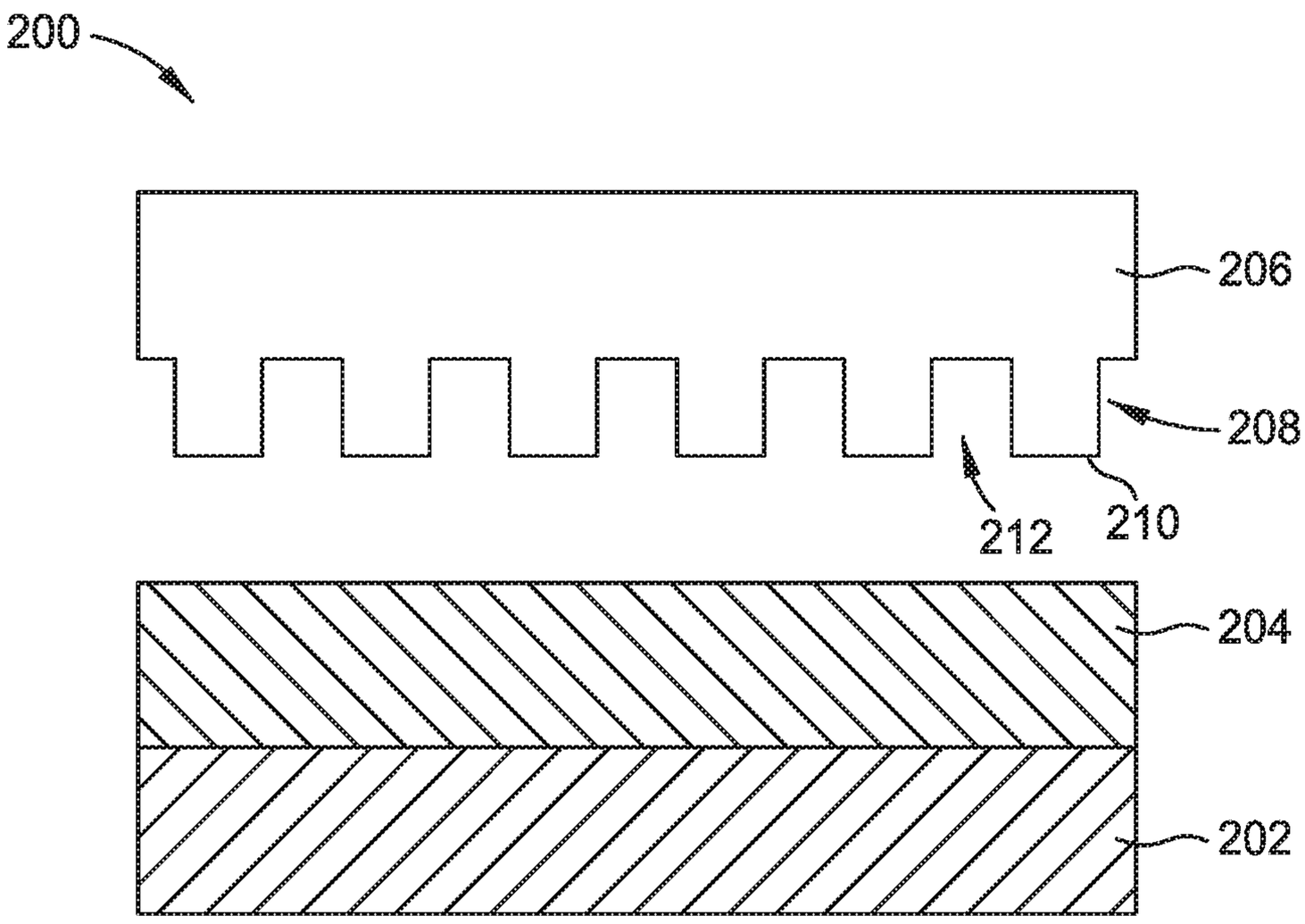

FIG. 2B

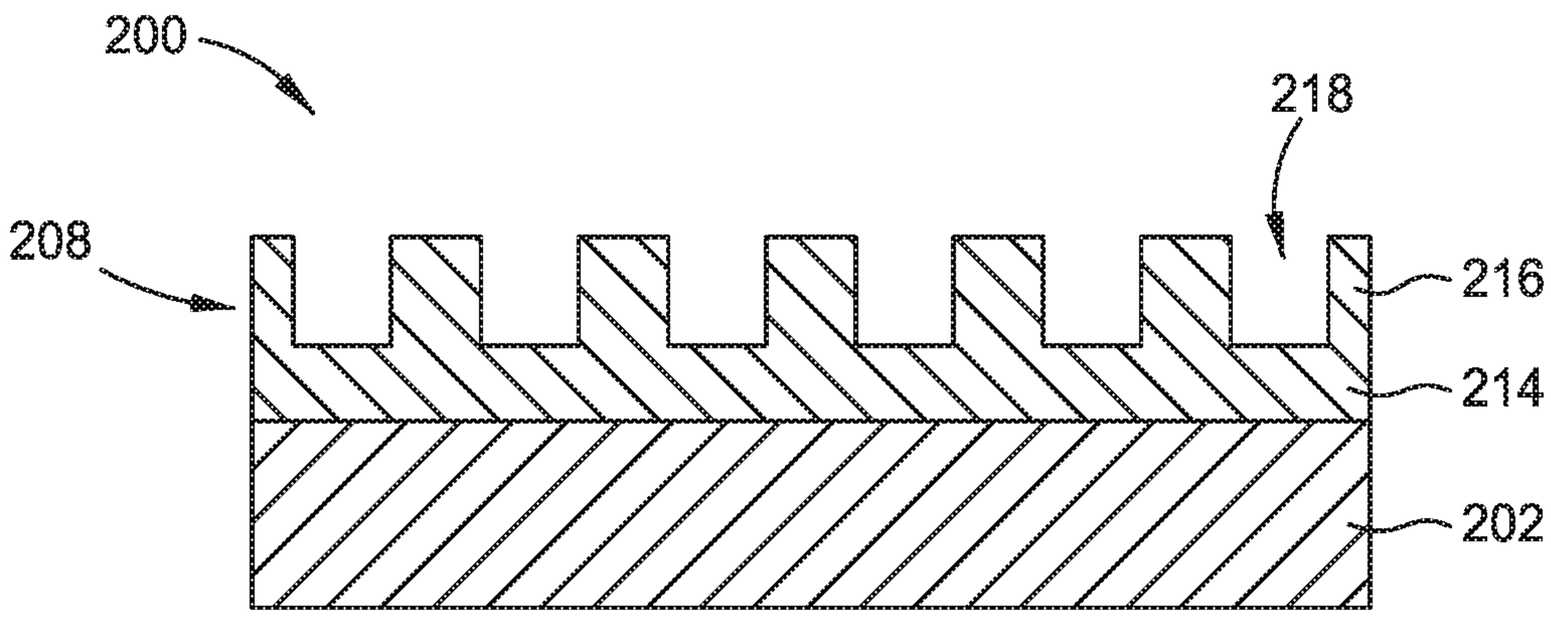

FIG. 2C

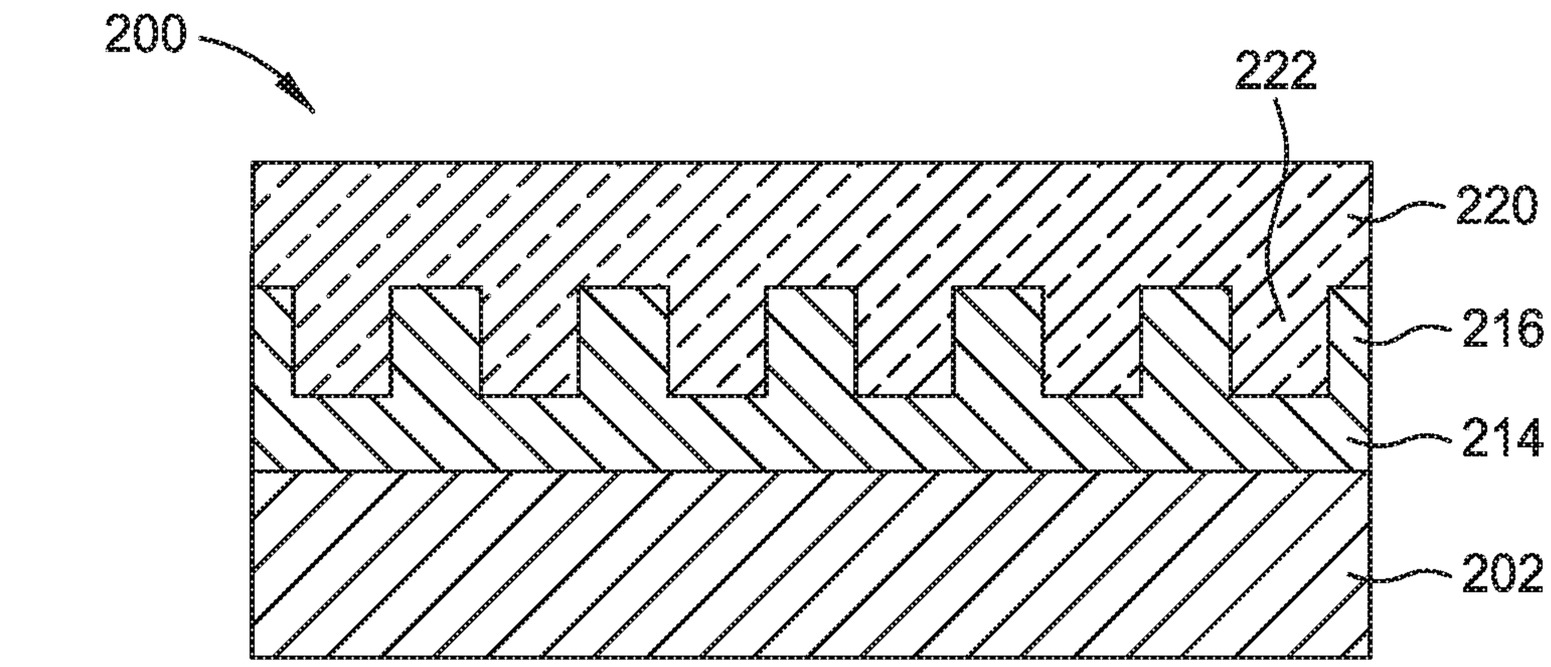

FIG. 2D

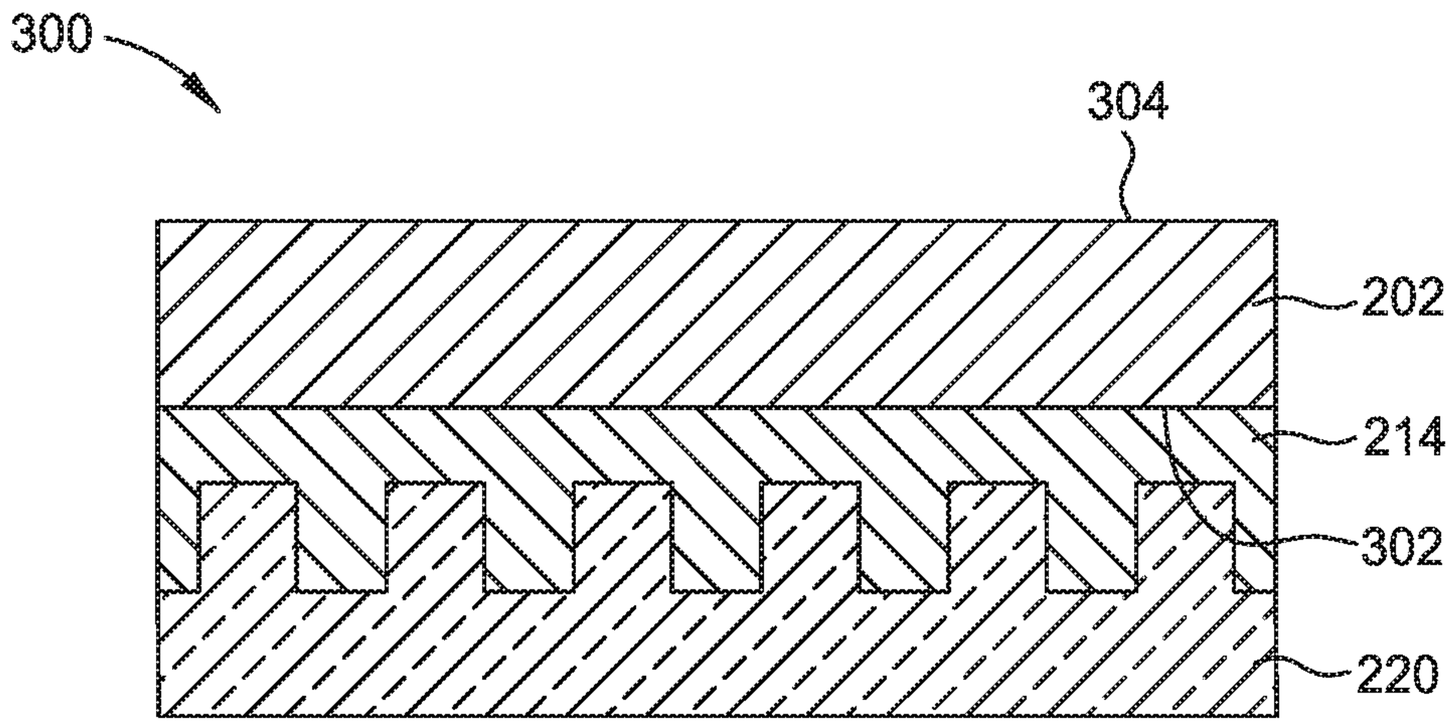

FIG. 3A

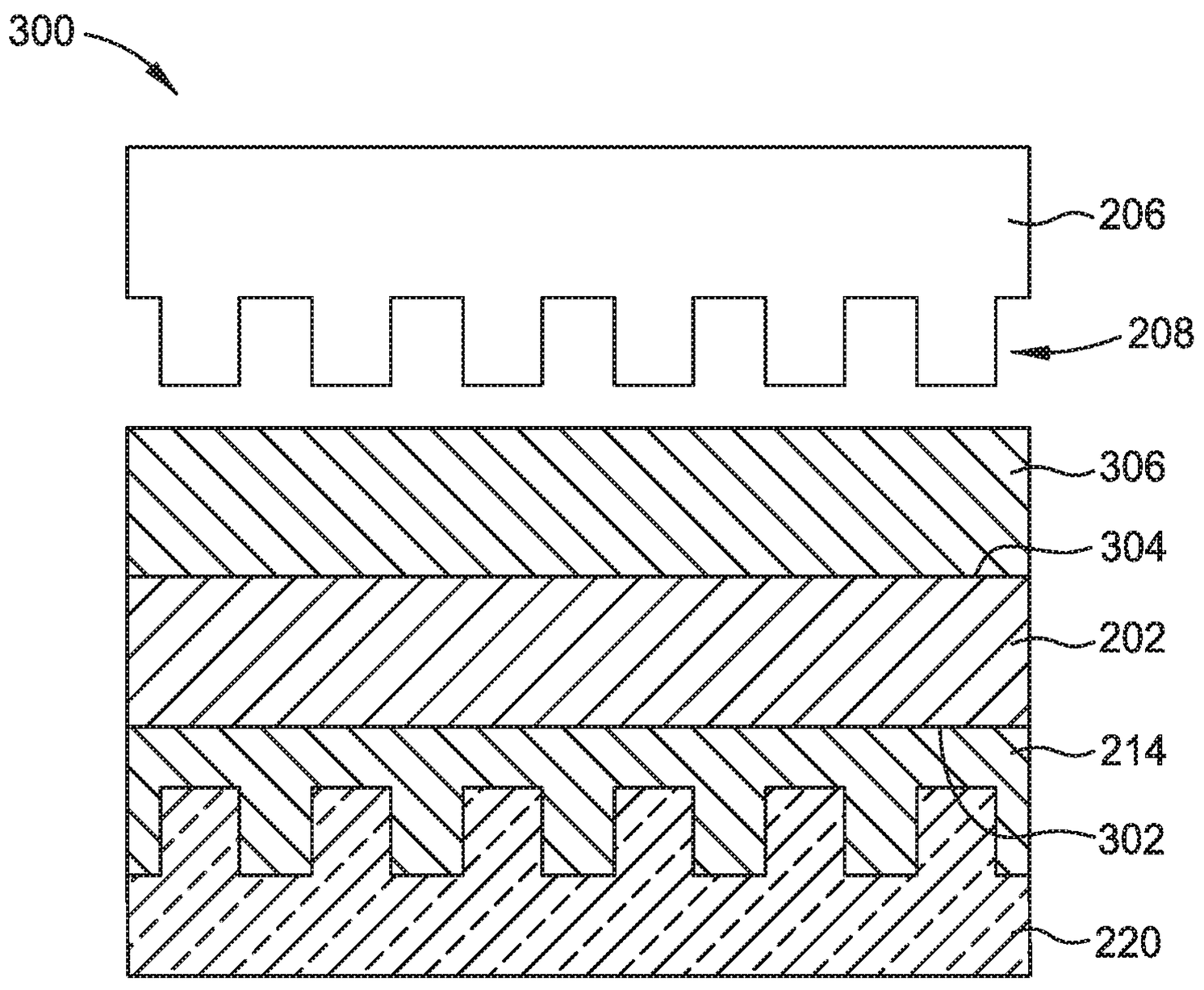

FIG. 3B

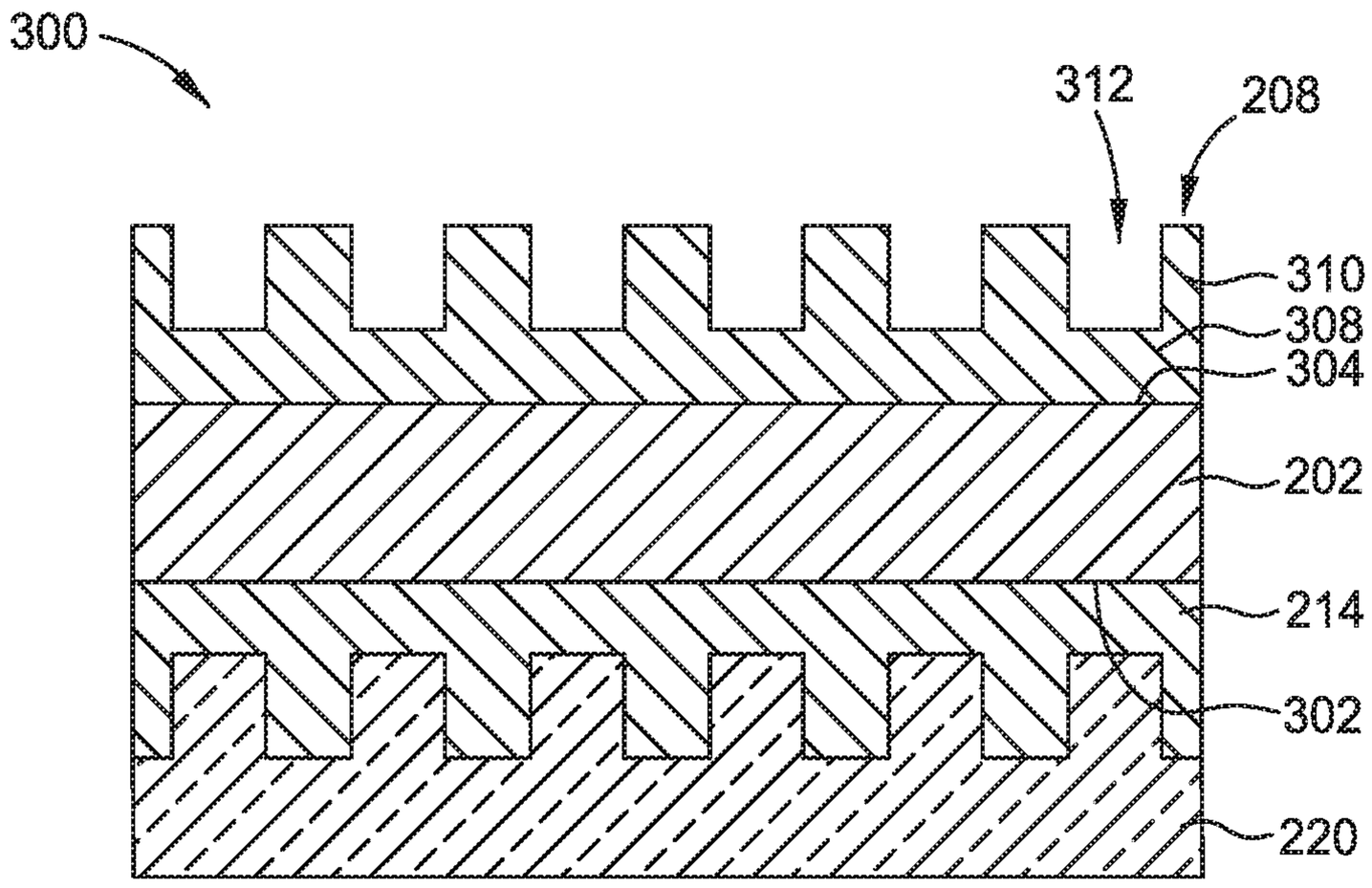
300
312
208
310
308
304
202
214
302
220

FIG. 3C

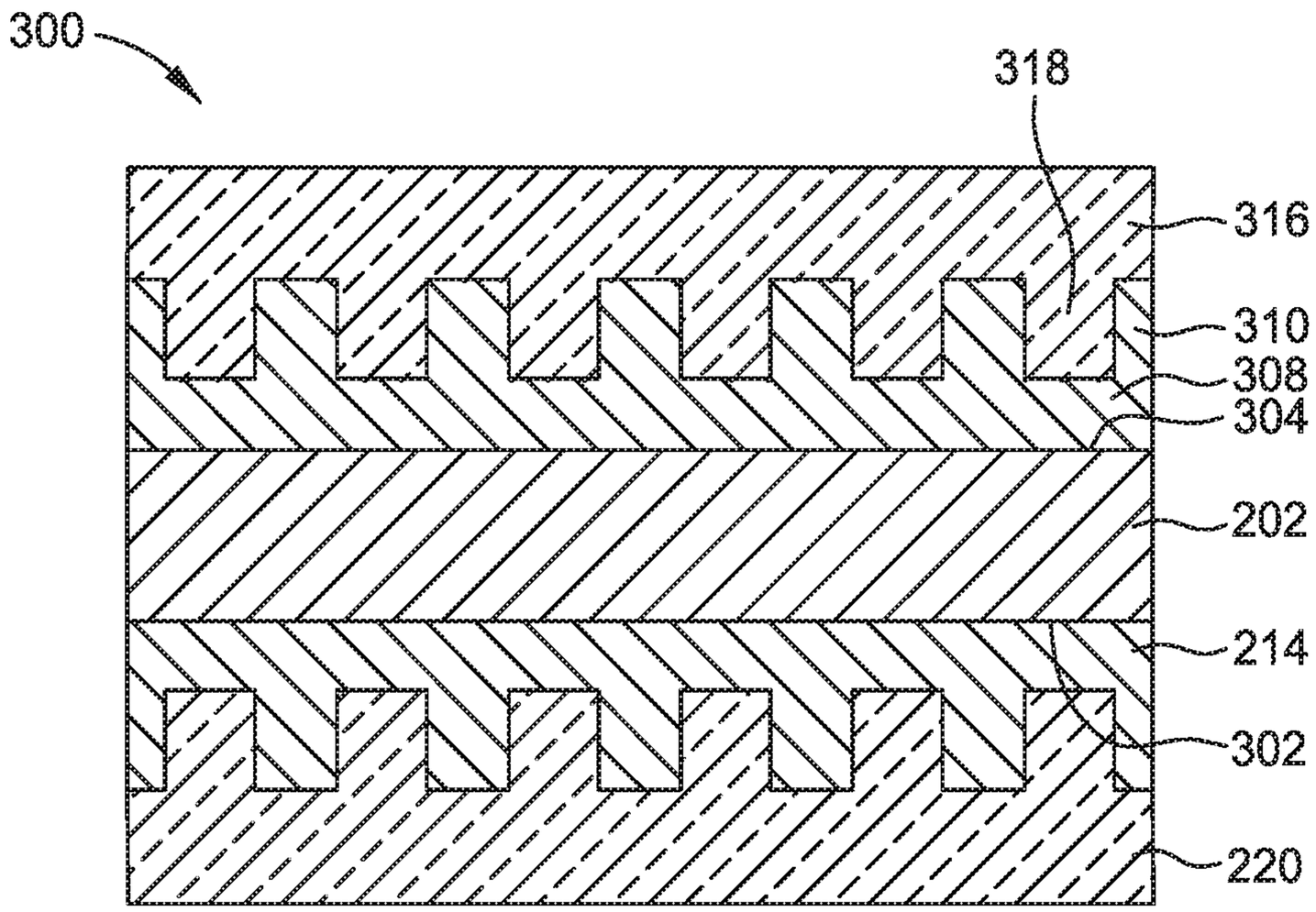
300
318
316
310
308
304
202
214
302
220

FIG. 3D

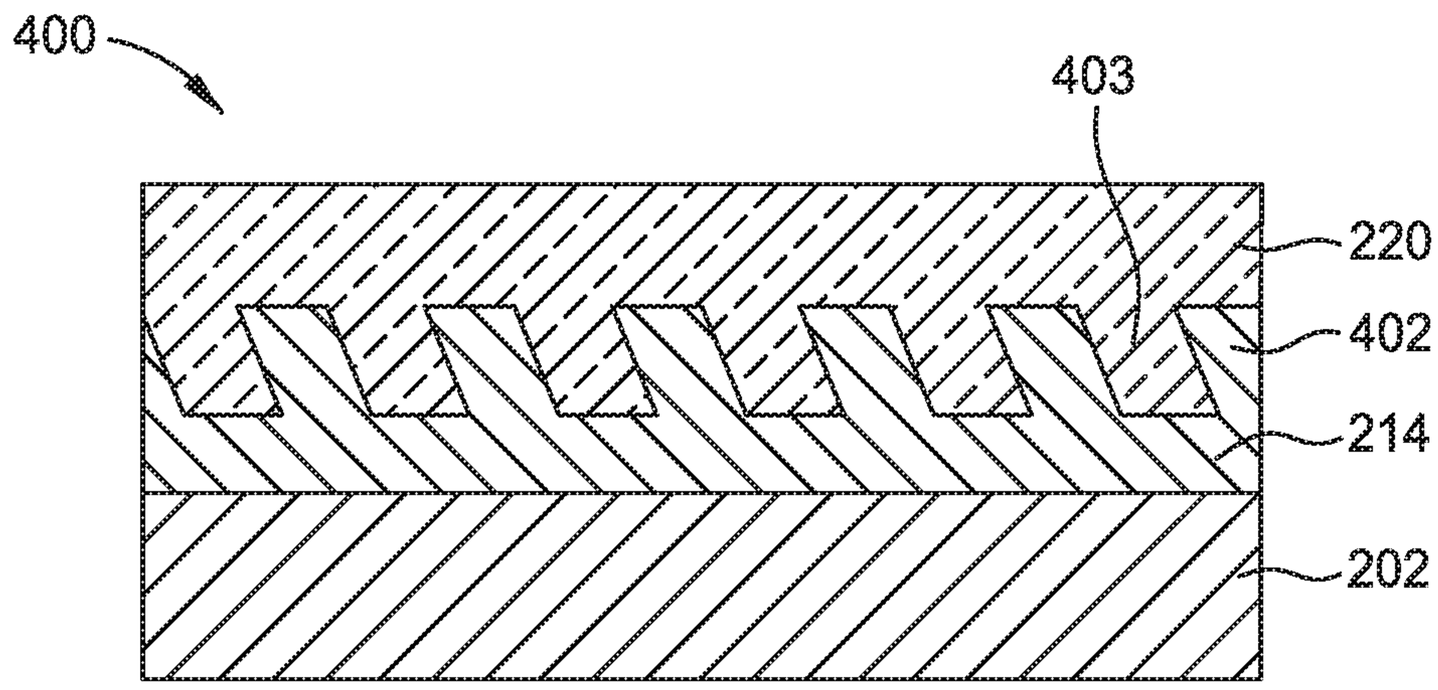

FIG. 4A

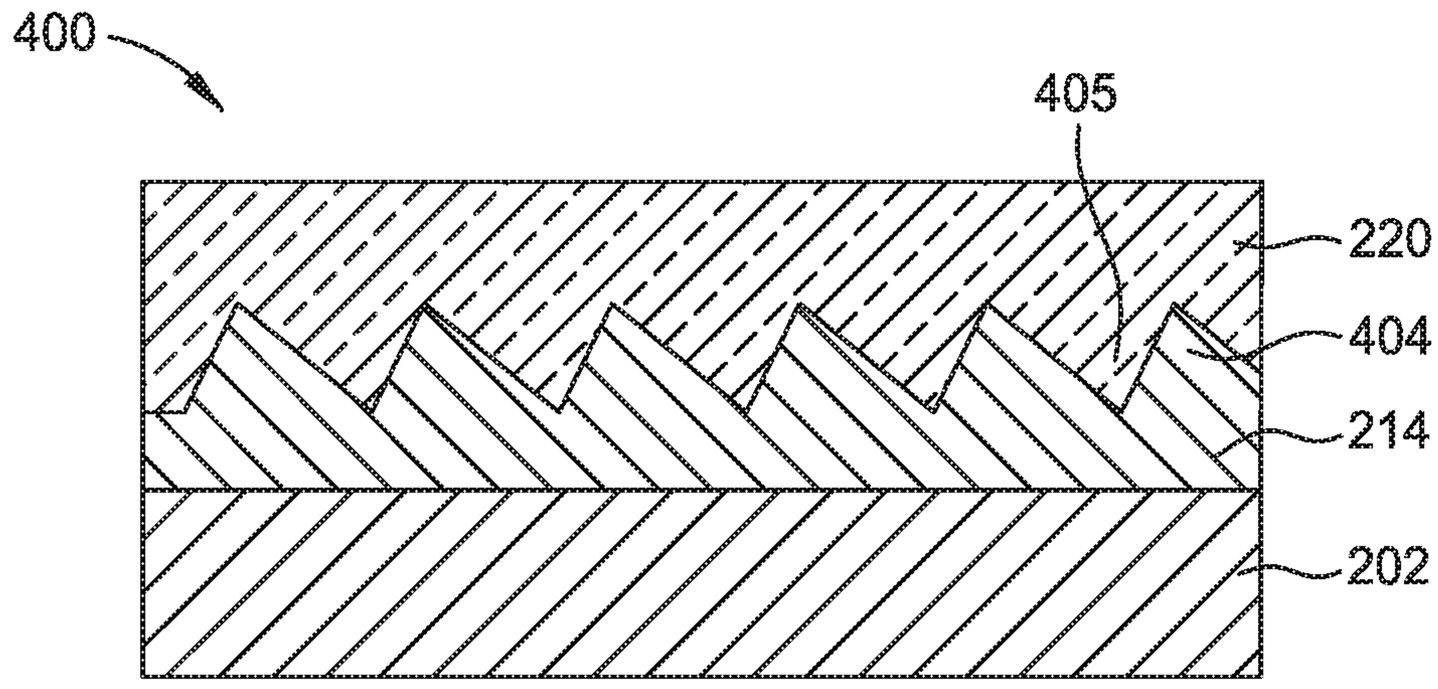

FIG. 4B

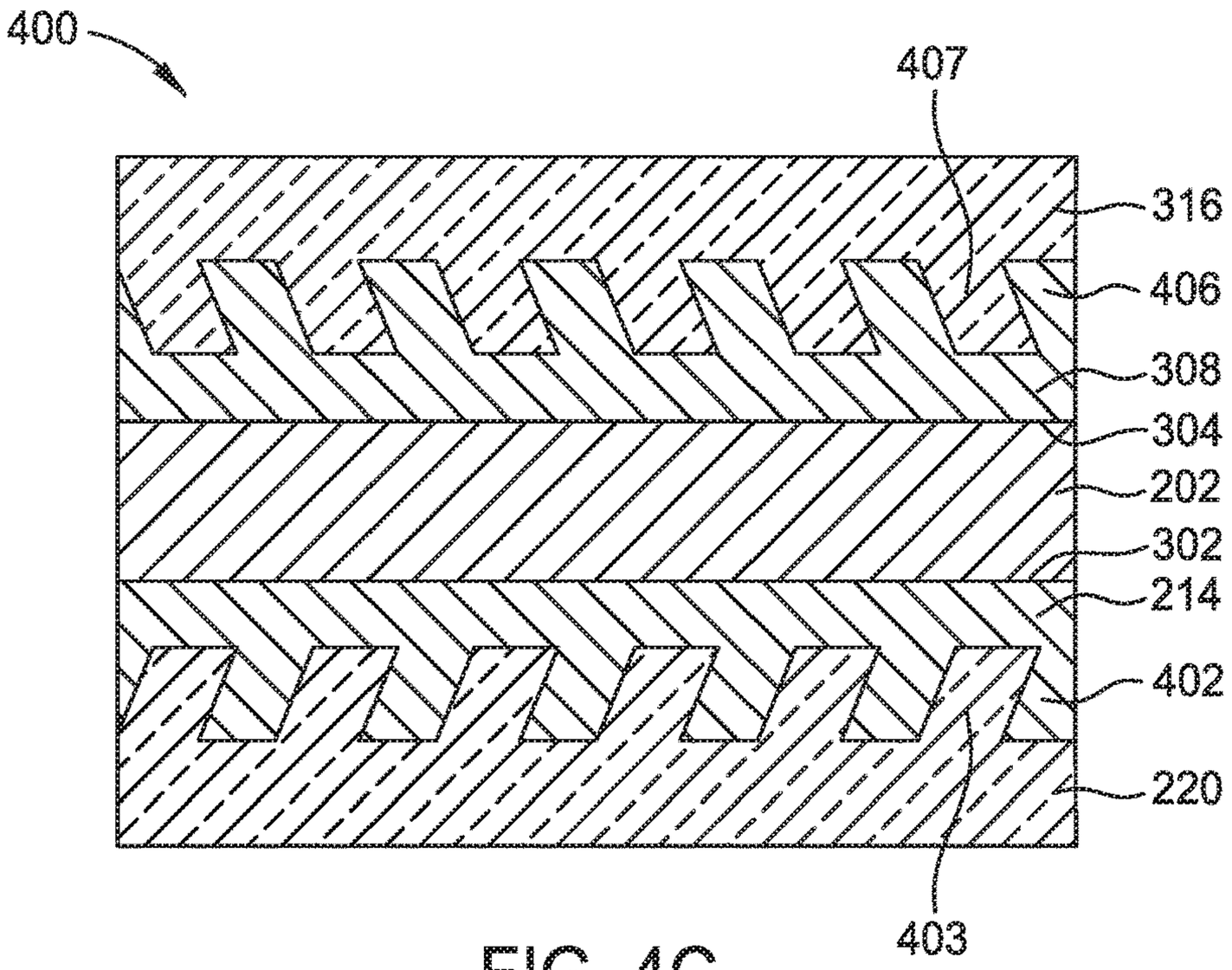
400
407
316
406
308
304
202
302
214
402
220
403

FIG. 4C

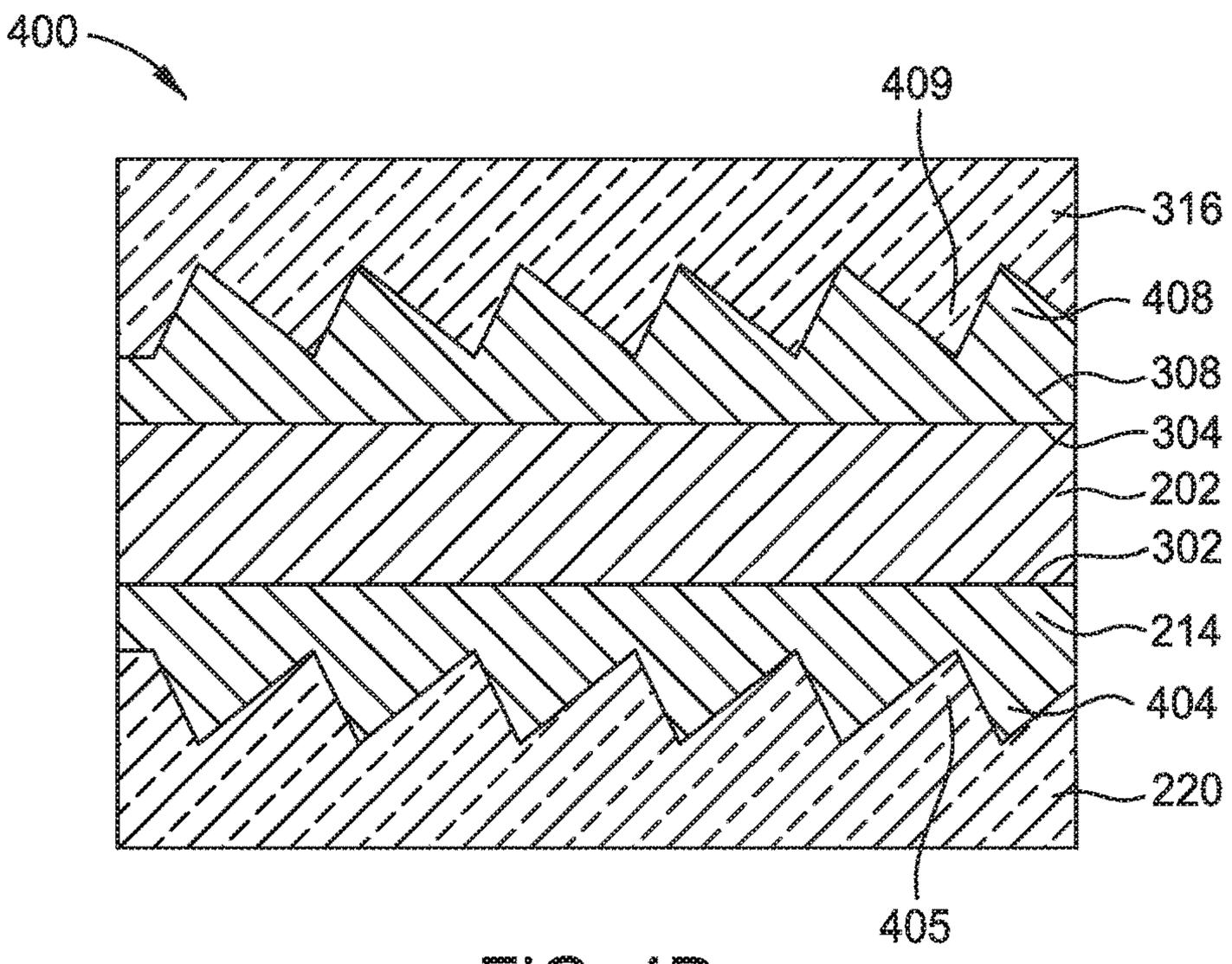
400
409
316
408
308
304
202
302
214
404
220
405

FIG. 4D

GAP FILL OF IMPRINTED STRUCTURE WITH SPIN COATED HIGH REFRACTIVE INDEX MATERIAL FOR OPTICAL COMPONENTS

CROSS-REFERENCE TO RELATED APPLICATIONS

This application claims priority to U.S. Provisional Patent Application Ser. No. 62/692,247, filed on Jun. 29, 2018, which herein is incorporated by reference.

BACKGROUND

Field

Embodiments of the present disclosure generally relate to display devices for augmented, virtual, and mixed reality. More specifically, embodiments described herein provide a method for forming an optical component for a display device.

Description of the Related Art

Virtual reality is generally considered to be a computer generated simulated environment in which a user has an apparent physical presence. A virtual reality experience can be generated in 3D and viewed with a head-mounted display (HMD), such as glasses or other wearable display devices that have near-eye display panels as lenses to display a virtual reality environment that replaces an actual environment.

Augmented reality enables an experience in which a user can still see through the display lenses of the glasses or other HMD device to view the surrounding environment, yet also see images of virtual objects that are generated for display and appear as part of the environment. Augmented reality can include any type of input, such as audio and haptic inputs, as well as virtual images, graphics, and video that enhances or augments the environment that the user experiences.

Both virtual reality and augmented reality display devices utilize optical components, such as waveguides or flat lens/meta surfaces, including a patterned layer having high refractive index (RI), such as 1.7 or higher. The refractive index is a ratio of the speed of light in a vacuum to the speed of light in the medium. Conventional method for forming the patterned high RI layer includes pressing a stamp having the pattern onto a layer of nanoparticles of the high RI material to transfer the pattern to the layer of nanoparticles. The resulting patterned high RI layer has either non-uniform dispersion of the nanoparticles in the patterned high RI layer or brittle structure due to weak bonding between nanoparticles.

Accordingly, an improved method for forming optical components for virtual reality or augmented reality display devices is needed.

SUMMARY

Embodiments of the present disclosure generally relate to a method for forming an optical component, for example, for a virtual reality or augmented reality display device. In one embodiment, a method includes forming a first layer having a first refractive index on a substrate, pressing a stamp having a pattern onto the first layer, transferring the pattern to the first layer to form a patterned first layer, and forming a second layer having a second refractive index greater than the first refractive index on the patterned first layer by spin coating.

In another embodiment, a method includes forming a first layer having a first refractive index ranging from about 1.1 to about 1.5, pressing a stamp having a pattern onto the first layer, transferring the pattern to the first layer to form a patterned first layer, and forming a second layer having a second refractive index ranging from about 1.7 to about 2.4 on the patterned first layer by spin coating.

In another embodiment, a method includes forming a first layer having a first refractive index on a first surface of a substrate, pressing a first stamp having a first pattern onto the first layer, transferring the first pattern to the first layer to form a patterned first layer, and forming a second layer having a second refractive index ranging from about 1.7 to about 2.4 on the patterned first layer by spin coating. The second layer includes a metal oxide.

BRIEF DESCRIPTION OF THE DRAWINGS

So that the manner in which the above recited features of the present disclosure can be understood in detail, a more particular description of the disclosure, briefly summarized above, may be had by reference to embodiments, some of which are illustrated in the appended drawings. It is to be noted, however, that the appended drawings illustrate only exemplary embodiments and are therefore not to be considered limiting of its scope, and may admit to other equally effective embodiments.

FIG. **1** is a flow diagram of a method for forming an optical component according to one embodiment described herein.

FIGS. **2**A-**2**D illustrate schematic cross-sectional views of the optical component during different stages of the method of FIG. **1** according to one embodiment described herein.

FIGS. **3**A-**3**D illustrate schematic cross-sectional views of an optical component during different stages according to one embodiment described herein.

FIGS. **4**A-**4**D illustrate schematic cross-sectional views of an optical component according to embodiments described herein.

To facilitate understanding, identical reference numerals have been used, where possible, to designate identical elements that are common to the figures. It is contemplated that elements and features of one embodiment may be beneficially incorporated in other embodiments without further recitation.

DETAILED DESCRIPTION

Embodiments of the present disclosure generally relate to a method for forming an optical component, for example, for a virtual reality or augmented reality display device. In one embodiment, the method includes forming a first layer on a substrate, and the first layer has a first refractive index. The method further includes pressing a stamp having a pattern onto the first layer, and the pattern of the stamp is transferred to the first layer to form a patterned first layer. The method further includes forming a second layer on the patterned first layer by spin coating, and the second layer has a second refractive index greater than the first refractive index. The second layer having the high refractive index is formed by spin coating, leading to improved nanoparticle uniformity in the second layer.

FIG. **1** is a flow diagram of a method **100** for forming an optical component **200** according to one embodiment

described herein. FIGS. **2**A-**2**D illustrate schematic cross-sectional views of the optical component **200** during different stages of the method **100** of FIG. **1** according to one embodiment described herein. The method **100** starts at block **102** by forming a first layer **204** having a first RI on a substrate **202**, as shown in FIG. **2**A. In one embodiment, the substrate **202** is fabricated from a visually transparent material, such as glass. The substrate **202** has a RI ranging from about 1.4 to about 2.0. The first layer **204** is fabricated from a transparent material, and the first RI ranges from about 1.1 to about 1.5. In one embodiment, the RI of the substrate **202** is the same as the first RI of the first layer **204**. In another embodiment, the RI of the substrate **202** is different from the first RI of the first layer **204**. The first layer **204** is fabricated from porous silicon dioxide, quartz, or any suitable material. In one embodiment, the first layer **204** is formed on the substrate **202** by spin coating. For example, a solution including a silicon precursor is spin-coated onto the substrate **202** and then heated in oxygen environment to form the first layer **204**. In some embodiments, there are no nanoparticles dispersed in the solution. The silicon precursor is dissolved in the solution.

Next, at block **104**, a stamp **206** having a pattern **208** is pressed onto the first layer **204**, as shown in FIG. **2**B. The stamp **206** is fabricated from any suitable material, such as silicon, quartz, glass, or a polymer. The polymer may be polyurethane, polybutadiene, polyisoprene, or poly(dimethylsiloxane) (PDMS). The pattern **208** formed on the stamp **206** may include a plurality of protrusions **210** and a plurality of gaps **212**. Adjacent protrusions **210** are separated by a gap **212**. The protrusions **210** may have any suitable shape. After the stamp **206** is pressed onto the first layer **204**, a curing process may be performed to cure the first layer **204**. The curing process may utilize UV light or thermal energy to cure the first layer **204**.

After the first layer **204** is cured, the stamp **206** is removed from the cured first layer **204**, and the pattern **208** of the stamp **206** is transferred to the cured first layer **204** to form a patterned first layer **214**, as shown at block **106** in FIG. **1** and in FIG. **2**C. The pattern **208** of the patterned first layer **214** includes a plurality of protrusions **216** and a plurality of gaps **218**. Adjacent protrusions **216** are separated by a gap **218**. As shown in FIG. **2**C, the protrusion **216** has a rectangular shape. The protrusion **216** may have any other suitable shape. Examples of the protrusion **216** having different shapes are shown in FIGS. **4**A-**4**D. In one embodiment, the protrusions **216** are gratings. Gratings are a plurality of parallel elongated structures that splits and diffracts light into several beams traveling in different directions. Gratings may have different shapes, such as sine, square, triangle, or sawtooth gratings. Because the first layer **204**, or the patterned first layer **214**, does not contain any nanoparticles, there are no non-uniformity issues. Furthermore, the removal of the stamp **206** from the patterned first layer **214** does not damage the patterned first layer **214**, because the patterned first layer **214** is not formed by packing nanoparticles.

Next, at block **108**, a second layer **220** having a refractive index greater than that of the first layer **204** is formed on the patterned first layer **214** by spin coating, as shown in FIG. **2**D. The second layer **220** includes metal oxides, such as titanium oxide (TiO_x), tantalum oxide (TaO_x), zirconium oxide (ZrO_x), hafnium oxide (HfO_x), or niobium oxide (NbO_x). In one embodiment, the second layer **220** has a RI ranging from about 1.7 to about 2.4. In one embodiment, the second layer **220** includes nanoparticles of the metal oxides dispersed in a polymer matrix or a carrier liquid, and the nanoparticles are uniformly distributed throughout the second layer **220** due to the spin coating method. Furthermore, because the patterned first layer **214** has the pattern **208** formed thereon, the second layer **220** is also patterned as the second layer **220** is spin coated on the patterned first layer **214**. As shown in FIG. **2**D, the second layer **220** includes a plurality of protrusions **222**, and each protrusion **222** is formed in a corresponding gap **218** (as shown in FIG. **2**C) of the patterned first layer **214**. The protrusions **216** of the patterned first layer **214** and the protrusions **222** of the second layer **220** are alternately positioned. Because the pattern of the second layer **220**, i.e., the protrusions **222**, are formed without using a stamp to press thereonto, the pattern of the second layer **220** is not damaged and the nanoparticles of the metal oxide material are uniformly distributed in the second layer **220**.

After the spin coating of the second layer **220**, a curing process may be performed to cure the second layer **220**. The curing process of the second layer **220** may be the same as the curing process of the patterned first layer **214**. The optical component **200** including layers having different RIs may be used in any suitable display devices. For example, in one embodiment, the optical component **200** is used as a waveguide or waveguide combiner in augmented reality display devices. Waveguides are structures that guide optical waves. Waveguide combiners are used in augmented reality display devices that combine real world images with virtual images. In another embodiment, the optical component **200** is used as a flat lens/meta surfaces in augmented and virtual reality display devices and 3D sensing devices, such as face ID and LIDAR.

FIGS. **2**A-**2**D illustrate the method **100** for forming the optical component **200** including layers having different RIs on one side of the substrate **202**. In some embodiments, both sides of the substrate **202** can be utilized to form layers having different RIs thereon. FIGS. **3**A-**3**D illustrate schematic cross-sectional views of an optical component **300** during different stages according to one embodiment described herein. As shown in FIG. **3**A, the substrate **202** includes a first surface **302** and a second surface **304** opposite the first surface **302**. The patterned first layer **214** and the second layer **220** are formed on the first surface **302** of the substrate **202**, as described in FIGS. **2**A-**2**D. Next, a third layer **306** is formed on the second surface **304** of the substrate **202**, and the third layer **306** is patterned by the stamp **206**, as shown in FIG. **3**B. The third layer **306** may be fabricated from the same materials as the first layer **204** (as shown in FIG. **2**A). The third layer **306** may be formed by the same process as the first layer **204**. The stamp **206** includes the pattern **208**.

Next, as shown in FIG. **3**C, the pattern **208** of the stamp **206** is transferred to the third layer **306** to form a patterned third layer **308**, and the stamp **206** is removed from the patterned third layer **308**. The patterned third layer **308** is cured by a curing process similar to the curing process performed on the patterned first layer **214** prior to removal of the stamp **206**. The patterned third layer **308** includes a plurality of protrusions **310** and a plurality of gaps **312**. Adjacent protrusions **310** are separated by a gap **312**. The patterned third layer **308** may be fabricated from the same material as the patterned first layer **214** and may have the same pattern as the patterned first layer **214**. In other words, the patterned third layer **308** may be identical to the patterned first layer **214**. In some embodiments, the patterned third layer **308** has a different pattern than the patterned first layer **214**. Next, as shown in FIG. **3**D, a fourth layer **316** is formed on the patterned third layer **308** by spin coating. The

fourth layer **316** may be identical to the second layer **220** and may be fabricated by the same method as the second layer **220**. The fourth layer **316** includes a pattern, such as the plurality of protrusions **318**. The protrusions **310** of the patterned third layer **308** and the protrusions **318** of the fourth layer **316** are alternately positioned. The optical component **300** includes layers having different RIs formed on two surfaces of the substrate **202**. The optical component **300** may be used in any suitable display devices. For example, in one embodiment, the optical component **300** is used as a waveguide or waveguide combiner in augmented reality display devices. In another embodiment, the optical component **300** is used as a flat lens/meta surfaces in augmented and virtual reality display devices and 3D sensing devices, such as face ID and LIDAR.

FIGS. **4**A-**4**D illustrate schematic cross-sectional views of an optical component **400** according to embodiments described herein. As shown in FIG. **4**A, the optical component **400** includes the substrate **202**, the patterned first layer **214** disposed on the substrate **202**, and the second layer **220** disposed on the patterned first layer **214**. The patterned first layer **214** includes a plurality of protrusions **402**, and the second layer **220** includes a plurality of protrusions **403**. Each of the protrusions **402**, **403** has a parallelogramical cross-sectional area, as shown in FIG. **4**A. The protrusions **402**, **403** may be gratings.

As shown in FIG. **4**B, the optical component **400** includes the substrate **202**, the patterned first layer **214** disposed on the substrate **202**, and the second layer **220** disposed on the patterned first layer **214**. The patterned first layer **214** includes a plurality of protrusions **404**, and the second layer **220** includes a plurality of protrusions **405**. Each of the protrusions **404**, **405** has a triangular cross-sectional area, as shown in FIG. **4**B. The protrusions **404**, **405** may be gratings.

As shown in FIG. **4**C, the optical component **400** includes the substrate **202**, the patterned first layer **214** disposed on the first surface **302** of the substrate **202**, and the second layer **220** disposed on the patterned first layer **214**. The patterned first layer **214** includes the plurality of protrusions **402**, and the second layer **220** includes the plurality of protrusions **403**. The optical component **400** further includes the patterned third layer **308** disposed on the second surface **304** of the substrate **202** and the fourth layer **316** disposed on the patterned third layer **308**. The patterned third layer **308** includes a plurality of protrusions **406**, and the fourth layer **316** includes a plurality of protrusions **407**. The protrusions **406**, **407** may be substantially the same as the protrusions **402**, **403**, respectively. The protrusions **402**, **403**, **406**, **407** may be gratings.

As shown in FIG. **4**D, the optical component **400** includes the substrate **202**, the patterned first layer **214** disposed on the first surface **302** of the substrate **202**, and the second layer **220** disposed on the patterned first layer **214**. The patterned first layer **214** includes the plurality of protrusions **404**, and the second layer **220** includes the plurality of protrusions **405**. The optical component **400** further includes the patterned third layer **308** disposed on the second surface **304** of the substrate **202** and the fourth layer **316** disposed on the patterned third layer **308**. The patterned third layer **308** includes a plurality of protrusions **408**, and the fourth layer **316** includes a plurality of protrusions **409**. The protrusions **408**, **409** may be substantially the same as the protrusions **404**, **405**, respectively. The protrusions **404**, **405**, **408**, **409** may be gratings. The optical component **400** may be used in any suitable display devices. For example, in one embodiment, the optical component **400** is used as a waveguide or waveguide combiner in augmented reality display devices. In another embodiment, the optical component **400** is used as a flat lens/meta surfaces in augmented and virtual reality display devices and 3D sensing devices, such as face ID and LIDAR.

A method for forming an optical component including layers having different RIs is disclosed. A pattern is formed in the layer having a lower RI, and the layer having a higher RI is spin coated on the patterned layer with the lower RI. The spin coated layer having the higher RI has improved uniformity of nanoparticles of the high RI material. Furthermore, the layer having the higher RI is not damaged because imprinting of the layer having the higher RI using a stamp is avoided. The application of the optical component is not limited to augmented and virtual reality display devices and 3D sensing devices. The optical component can be used in any suitable applications.

While the foregoing is directed to embodiments of the present disclosure, other and further embodiments of the disclosure may be devised without departing from the basic scope thereof, and the scope thereof is determined by the claims that follow.

What is claimed is:

1. A method, comprising:

forming a first layer having a first refractive index on a first surface of a substrate;

pressing a stamp having a pattern onto the first layer;

transferring the pattern to the first layer to form a patterned first layer;

forming a second layer having a second refractive index greater than the first refractive index on the patterned first layer by spin coating; and

forming a third layer having a third refractive index on a second surface of the substrate, the second surface being opposite the first surface of the substrate.

2. The method of claim **1**, wherein the first refractive index ranges from about 1.1 to about 1.5.

3. The method of claim **1**, wherein the first layer comprises porous silicon dioxide or quartz.

4. The method of claim **1**, wherein the second layer comprises a metal oxide.

5. The method of claim **1**, wherein the second layer comprises titanium oxide, tantalum oxide, zirconium oxide, hafnium oxide, or niobium oxide.

6. The method of claim **1**, wherein the first layer is formed on the substrate by spin coating.

7. A method, comprising:

forming a first layer having a first refractive index ranging from about 1.1 to about 1.5 on a first surface of a substrate;

pressing a stamp having a pattern onto the first layer;

transferring the pattern to the first layer to form a patterned first layer;

forming a second layer having a second refractive index ranging from about 1.7 to about 2.4 on the patterned first layer by spin coating; and

forming a third layer having a third refractive index on a second surface of the substrate, the second surface being opposite the first surface of the substrate.

8. The method of claim **7**, wherein the first layer comprises porous silicon dioxide or quartz.

9. The method of claim **7**, wherein the second layer comprises a metal oxide.

10. The method of claim **7**, wherein the second layer comprises titanium oxide, tantalum oxide, zirconium oxide, hafnium oxide, or niobium oxide.

11. The method of claim 7, wherein transferring the pattern to the first layer comprises curing the first layer with the stamp on the first layer.

12. The method of claim 11, wherein the curing the first layer comprises UV curing or thermal curing.

13. A method, comprising:

forming a first layer having a first refractive index on a first surface of a substrate;

pressing a first stamp having a first pattern onto the first layer;

transferring the first pattern to the first layer to form a patterned first layer;

forming a second layer having a second refractive index ranging from about 1.7 to about 2.4 on the patterned first layer by spin coating, the second layer comprising a metal oxide; and

forming a third layer having a third refractive index on a second surface of the substrate, the second surface being opposite the first surface of the substrate.

14. The method of claim 13, wherein the first layer comprises porous silicon dioxide or quartz.

15. The method of claim 13, wherein the second layer comprises titanium oxide, tantalum oxide, zirconium oxide, hafnium oxide, or niobium oxide.

16. The method of claim 13, wherein the first layer is formed on the first surface of the substrate by spin coating.

17. The method of claim 13, further comprising:

pressing a second stamp having a second pattern onto the third layer;

transferring the second pattern to the third layer to form a patterned third layer; and

forming a fourth layer having a fourth refractive index greater than the third refractive index on the patterned third layer by spin coating.

18. The method of claim 17, wherein the second pattern is different from the first pattern.

* * * * *