US010845715B2

(12) **United States Patent**
Babayan et al.

(10) **Patent No.: US 10,845,715 B2**
(45) **Date of Patent: Nov. 24, 2020**

(54) **POST EXPOSURE PROCESSING APPARATUS**

(71) Applicant: **Applied Materials, Inc.**, Santa Clara, CA (US)

(72) Inventors: **Viachslav Babayan**, Sunnyvale, CA (US); **Ludovic Godet**, Sunnyvale, CA (US); **Kyle M. Hanson**, Kalispell, MT (US); **Robert B. Moore**, Bigfork, MT (US)

(73) Assignee: **APPLIED MATERIALS, INC.**, Santa Clara, CA (US)

(*) Notice: Subject to any disclaimer, the term of this patent is extended or adjusted under 35 U.S.C. 154(b) by 0 days.

(21) Appl. No.: **16/548,711**

(22) Filed: **Aug. 22, 2019**

(65) **Prior Publication Data**

US 2019/0377272 A1 Dec. 12, 2019

Related U.S. Application Data

(63) Continuation of application No. 15/947,409, filed on Apr. 6, 2018, now Pat. No. 10,401,742, which is a (Continued)

(51) **Int. Cl.**

G03F 7/20	(2006.01)
G03F 7/38	(2006.01)
H01L 21/67	(2006.01)

(52) **U.S. Cl.**

CPC ***G03F 7/70716*** (2013.01); ***G03F 7/38*** (2013.01); ***G03F 7/70725*** (2013.01);
(Continued)

(58) **Field of Classification Search**

CPC G03F 7/70716; G03F 7/38; G03F 7/70725; H01L 21/6719; H01L 21/67028
(Continued)

(56) **References Cited**

U.S. PATENT DOCUMENTS

6,079,358 A	6/2000	Kim et al.
6,187,152 B1	2/2001	Ting et al.

(Continued)

FOREIGN PATENT DOCUMENTS

CN	101536151 A	9/2009
CN	102244023 A	11/2011

(Continued)

OTHER PUBLICATIONS

Written Opinion for PCT/US2017/059969 dated Feb. 9, 2018.
(Continued)

Primary Examiner — Hung Nguyen
(74) *Attorney, Agent, or Firm* — Patterson + Sheridan, LLP

(57) **ABSTRACT**

Implementations described herein relate to apparatus for post exposure processing. More specifically, implementations described herein relate to field-guided post exposure process chambers and cool down/development chambers used on process platforms. In one implementation, a plurality of post exposure process chamber and cool/down development chamber pairs are positioned on a process platform in a stacked arrangement and utilize a shared plumbing module. In another implementation, a plurality of post exposure process chamber and cool down/development chambers are positioned on a process platform in a linear arrangement and each of the chambers utilize an individually dedicated plumbing module.

20 Claims, 7 Drawing Sheets

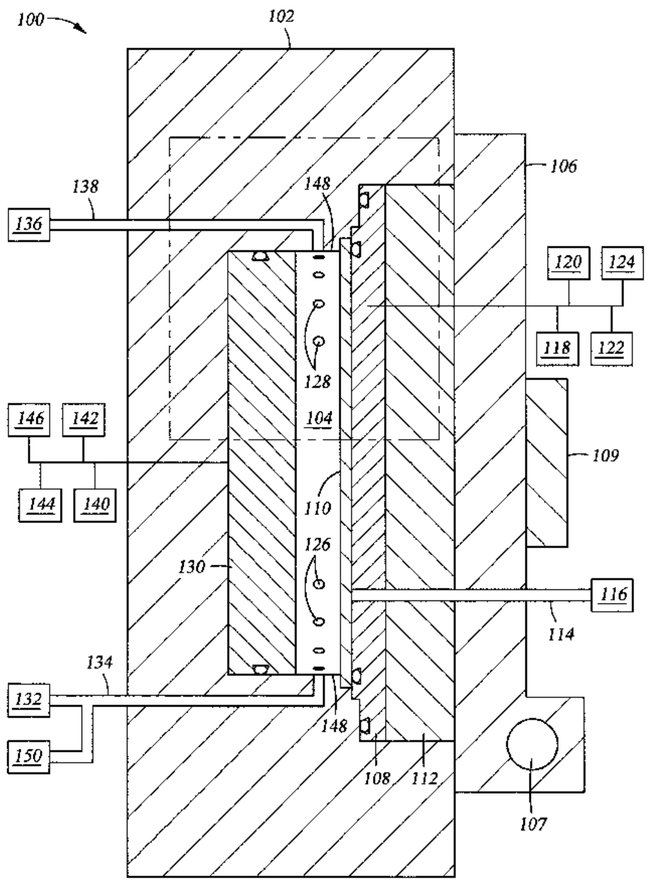

Related U.S. Application Data

continuation of application No. 15/435,007, filed on Feb. 16, 2017, now Pat. No. 9,964,863.

(60) Provisional application No. 62/436,873, filed on Dec. 20, 2016.

(52) **U.S. Cl.**
CPC ***H01L 21/6719*** (2013.01); ***H01L 21/67028*** (2013.01); ***H01L 21/67051*** (2013.01); ***H01L 21/67109*** (2013.01); ***H01L 21/67126*** (2013.01); ***H01L 21/67167*** (2013.01); ***H01L 21/67178*** (2013.01); ***H01L 21/67248*** (2013.01)

(58) **Field of Classification Search**
USPC 355/27, 30
See application file for complete search history.

(56) **References Cited**

U.S. PATENT DOCUMENTS

6,242,164	B1	6/2001	Choi et al.	
6,686,132	B2	2/2004	Cheng et al.	
6,841,342	B2	1/2005	Nishi et al.	
7,274,429	B2	9/2007	Paxton et al.	
7,474,377	B2	1/2009	Matsuoka et al.	
7,780,366	B2	8/2010	Ogata et al.	
7,780,813	B2	8/2010	Pau et al.	
9,280,070	B2	3/2016	Xie et al.	
9,964,863	B1	5/2018	Babayan et al.	
10,203,604	B2 *	2/2019	Babayan	G03F 7/2035
2002/0096114	A1	7/2002	Carducci et al.	
2004/0001787	A1	1/2004	Porshnev et al.	
2004/0016637	A1	1/2004	Yang et al.	
2005/0074706	A1	4/2005	Bristol et al.	
2006/0130751	A1	6/2006	Volfovski et al.	
2006/0177586	A1	8/2006	Ishida et al.	
2006/0201616	A1	9/2006	Matsuoka et al.	
2007/0077171	A1	4/2007	Hamada	
2007/0144439	A1	6/2007	Englhardt et al.	
2007/0177870	A1	8/2007	Hamada	
2008/0050679	A1	2/2008	Salek et al.	
2008/0304940	A1	12/2008	Auer-Jongepier et al.	
2010/0009274	A1	1/2010	Yamamoto	
2011/0165515	A1	7/2011	Wang et al.	
2011/0290283	A1	12/2011	Obweger et al.	
2012/0031894	A1	2/2012	Shigetomi	
2012/0244645	A1	9/2012	Rathsack et al.	
2012/0285621	A1	11/2012	Tan	
2012/0312336	A1	12/2012	Itoh et al.	
2015/0218697	A1 *	8/2015	Nguyen	H01J 37/32623 427/569
2016/0357107	A1	12/2016	Buchberger, Jr. et al.	
2018/0004094	A1 *	1/2018	Hanson	C23C 16/56

FOREIGN PATENT DOCUMENTS

JP	2003-124088	A	4/2003
JP	2007242854	A	9/2007
JP	2009260033	A	11/2009
JP	2016178185	A	10/2016
TW	201523712	A	6/2015
TW	201546948	A	12/2015
TW	201615905	A	5/2016
WO	2010/054076	A2	5/2010
WO	2011/112823	A2	9/2011
WO	2018/004815	A1	1/2018

OTHER PUBLICATIONS

Office Action for Taiwan Application No. 106140879 dated Nov. 13, 2019.

Communication pursuant to Rule 164(1) EPC and Search Report for European Application No. 17885260.4 dated Jun. 16, 2020.

Extended European Search Report for European Application No. EP 17 88 5260 dated Aug. 27, 2020.

Office Action for Taiwan Application No. 106140879 dated Jun. 30, 2020.

Search Report for Taiwan Application No. 106140879 dated Jun. 30, 2020.

Japanese Office Action dated Sep. 1, 2020, for Japanese Patent Application No. 2019-532810.

Chinese Office Action dated Sep. 3, 2020, for Chinese Patent Application No. 201780073007.8.

* cited by examiner

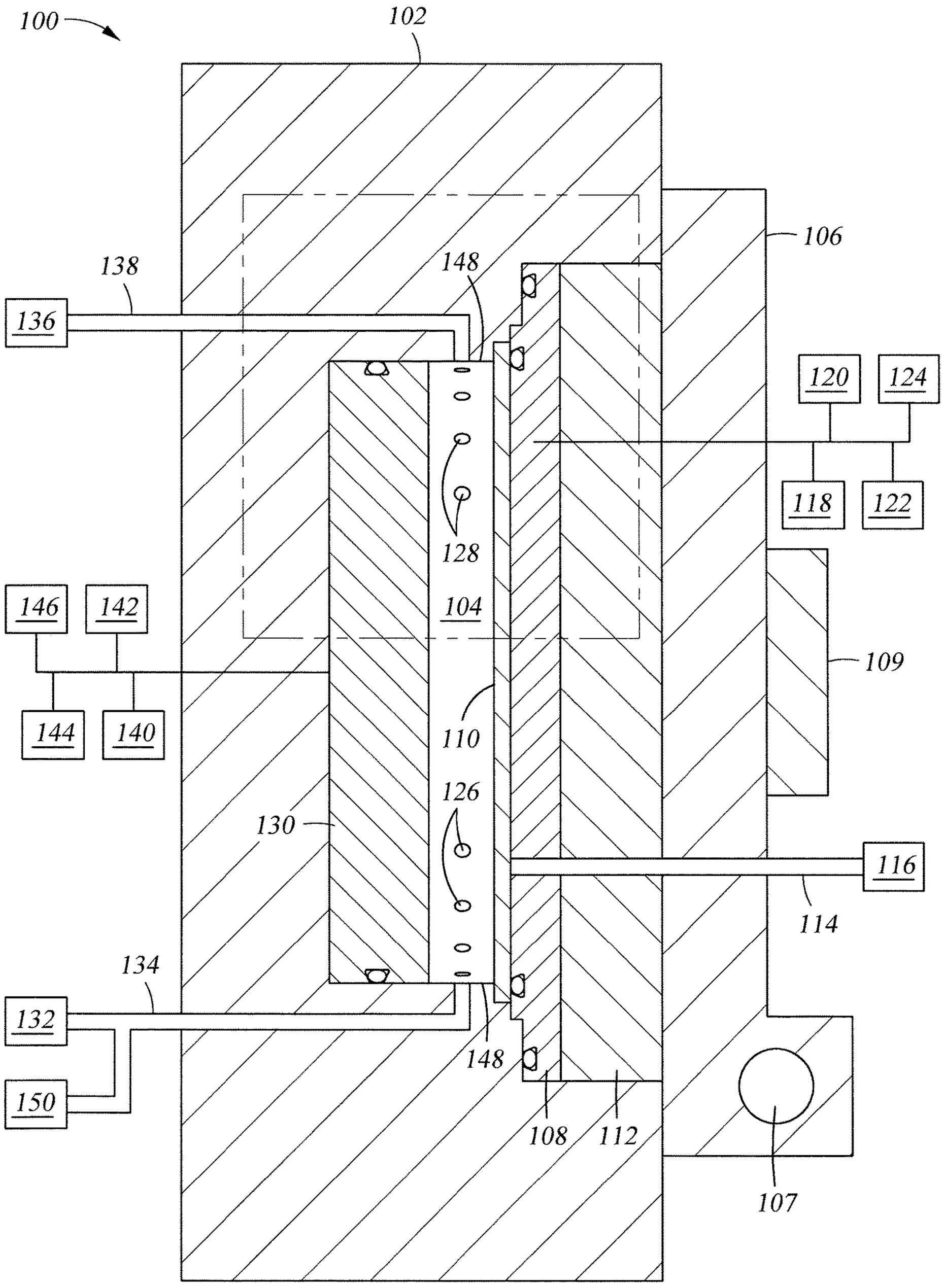
100
102
106
138
148
136
120
124
118
122
128
146
142
104
109
144
140
110
126
130
116
114
134
132
148
150
108
112
107

Fig. 1

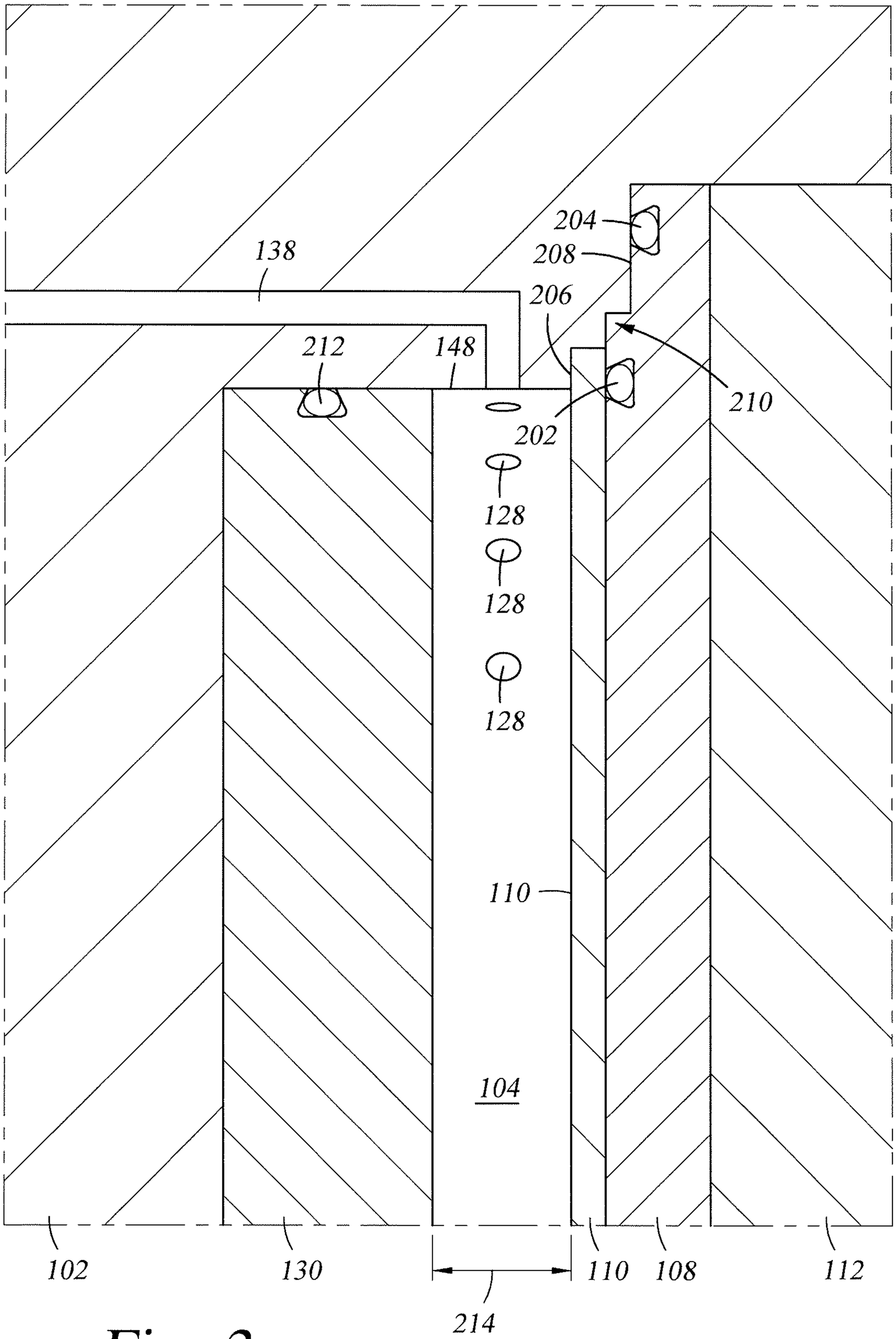
138
204
208
206
212
148
210
202
128
128
128
110
104
102
130
110
108
112
214

Fig. 2

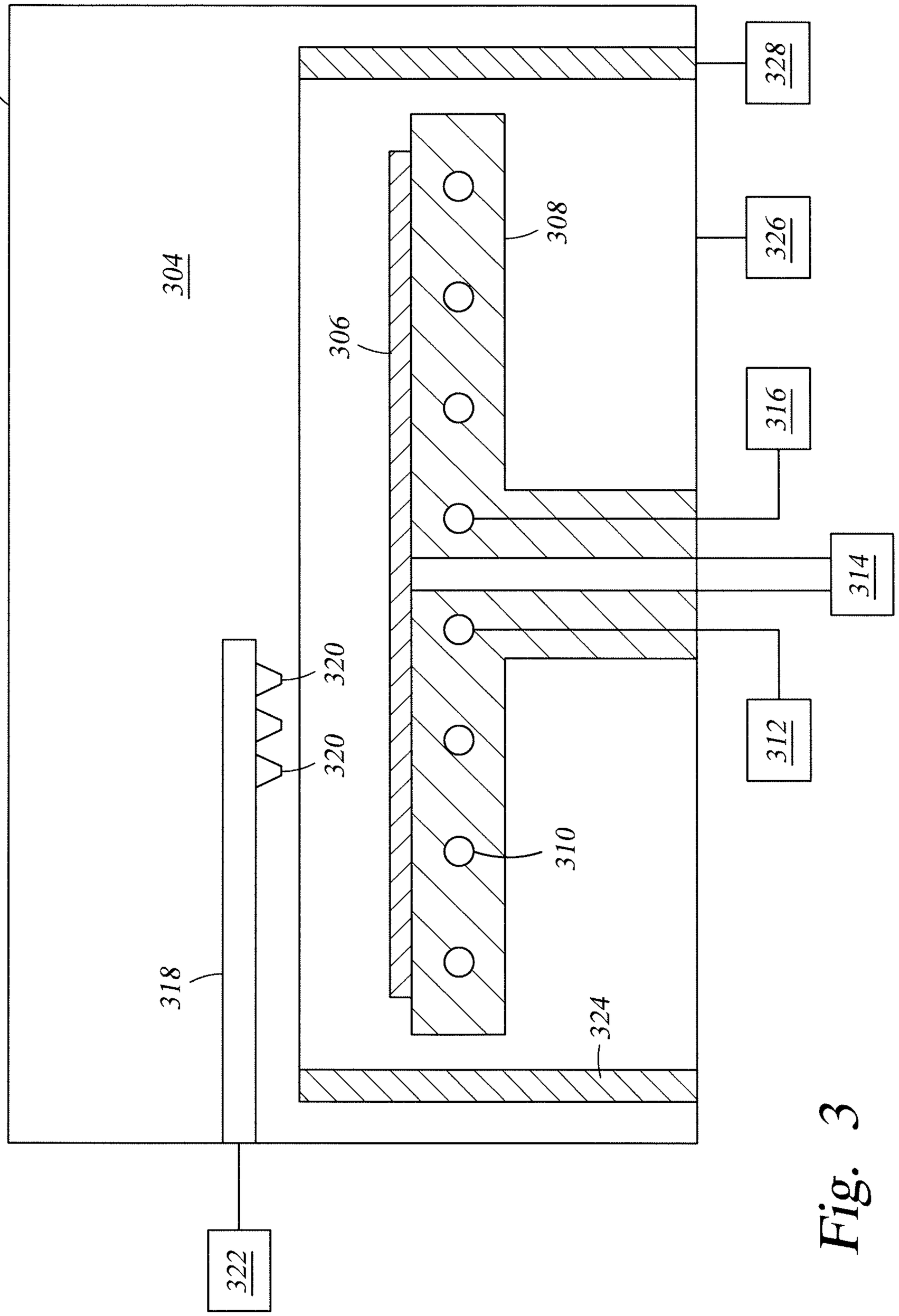

Fig. 3

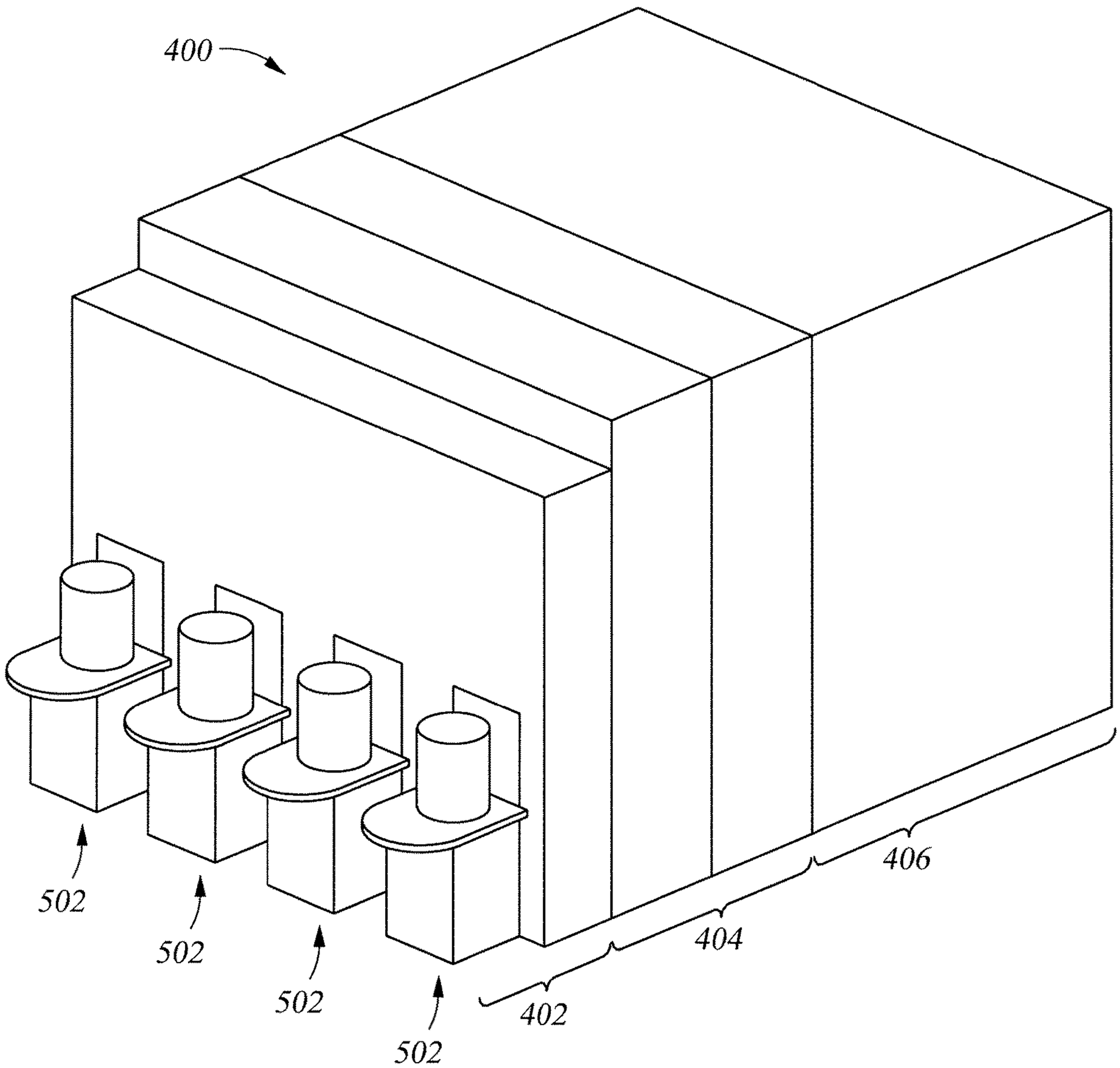

Fig. 4

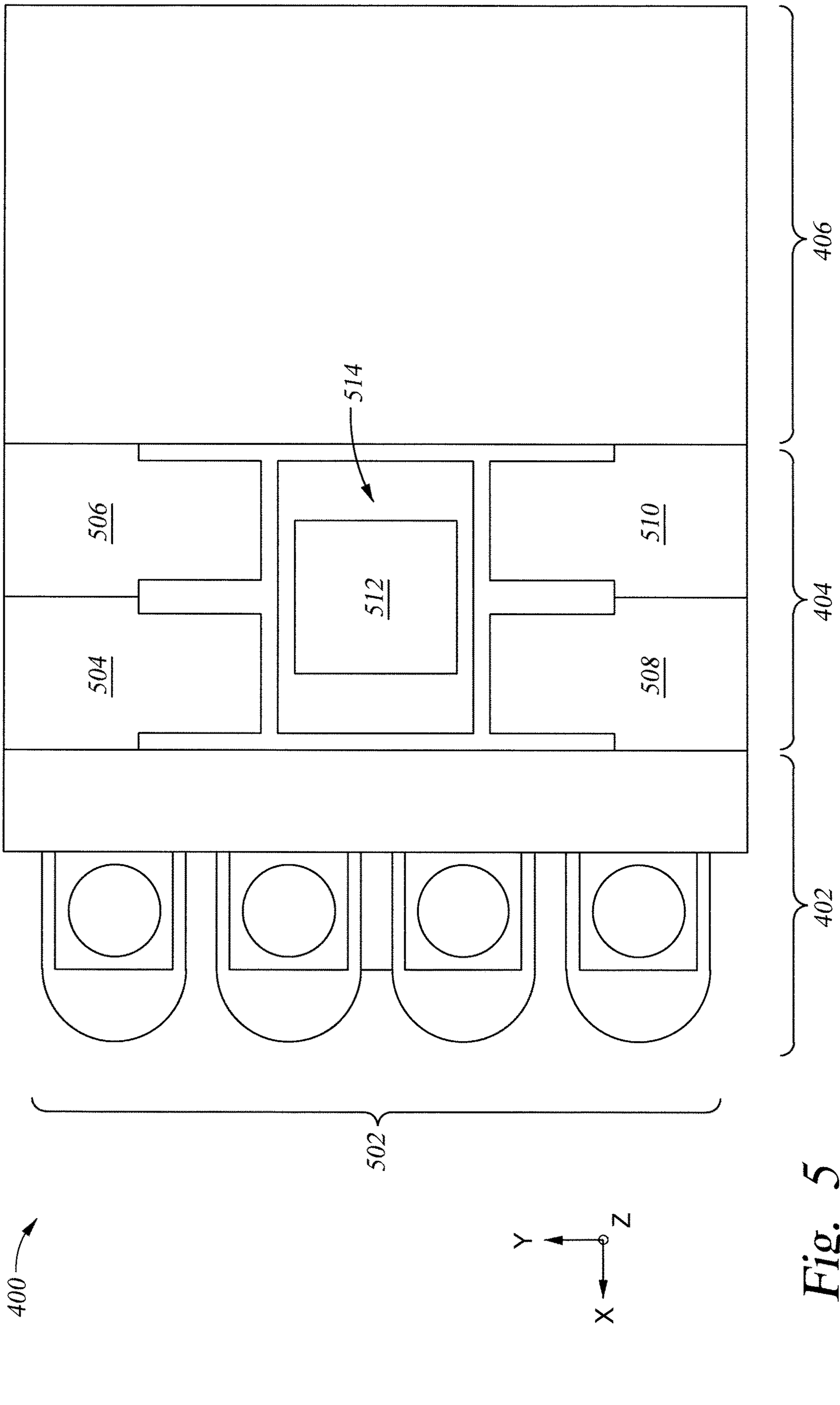

Fig. 5

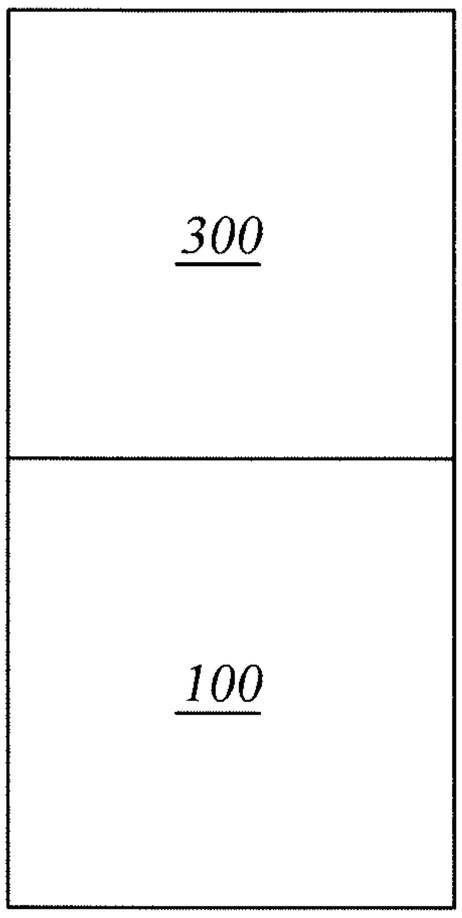

Fig. 6

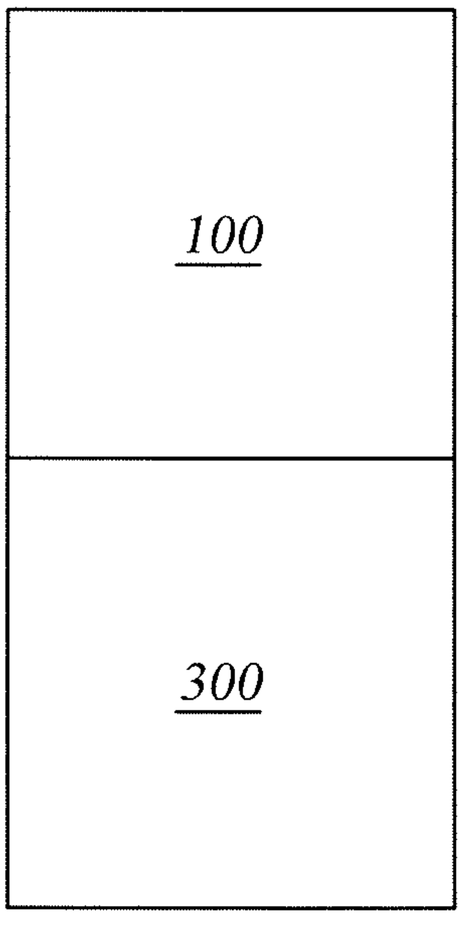

Fig. 7

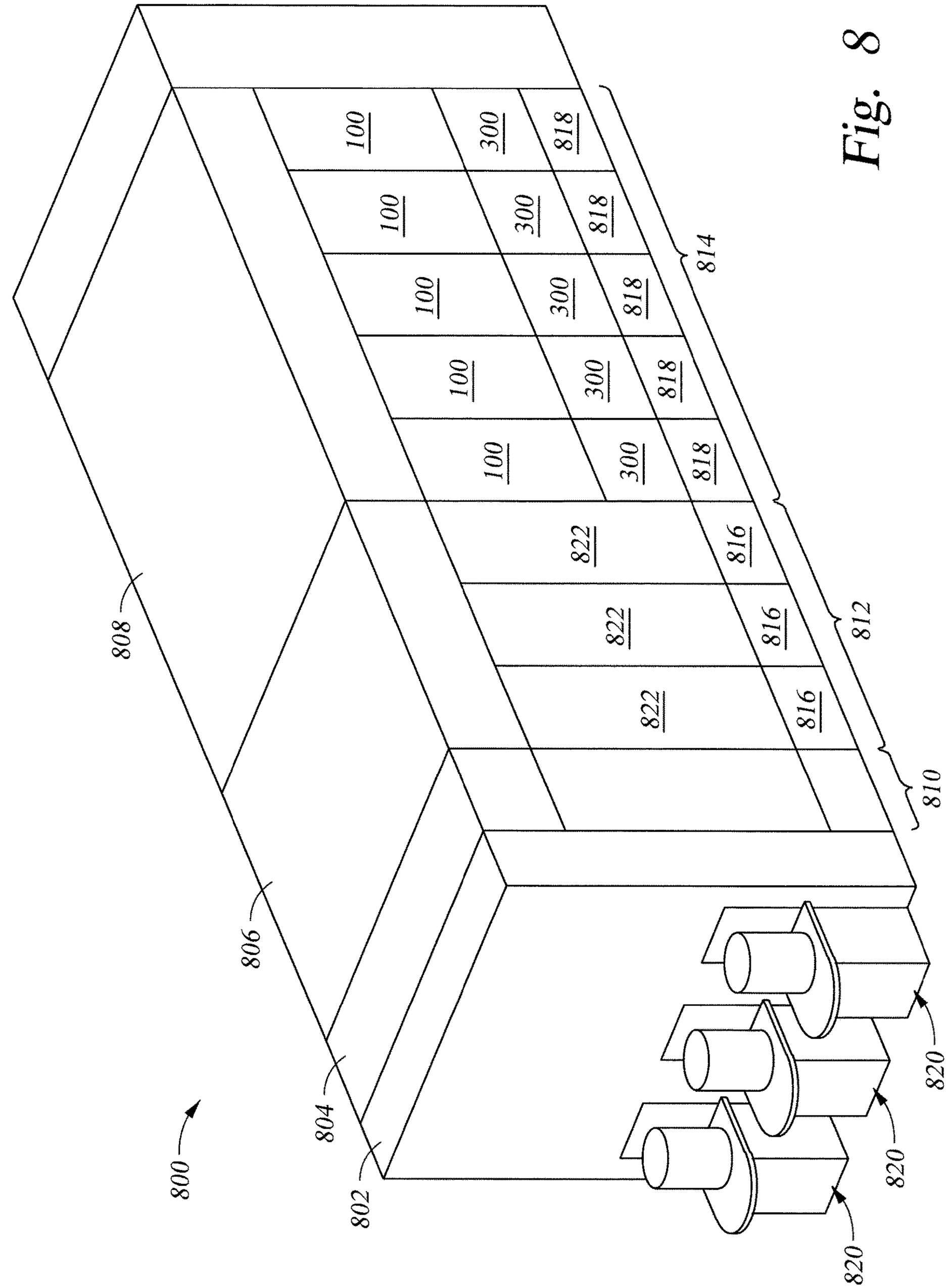

Fig. 8

POST EXPOSURE PROCESSING APPARATUS

CROSS-REFERENCE TO RELATED APPLICATIONS

This application is a continuation of U.S. patent application Ser. No. 15/947,409, filed Apr. 6, 2018, now U.S. Pat. No. 10,401,742, which is a continuation of U.S. patent application Ser. No. 15/435,007, filed Feb. 16, 2017, now U.S. Pat. No. 9,964,863, which claims benefit of U.S. Provisional Patent Application No. 62/436,873, filed Dec. 20, 2016, all of which are hereby incorporated by reference in their entirety.

BACKGROUND

Field

Implementations of the present disclosure generally relate to apparatus for processing substrates after lithographic exposure.

Description of the Related Art

Integrated circuits have evolved into complex devices that can include millions of components (e.g., transistors, capacitors and resistors) on a single chip. Photolithography is a process that may be used to form components on a chip. Generally the process of photolithography involves a few basic stages. Initially, a photoresist layer is formed on a substrate. A chemically amplified photoresist may include a resist resin and a photoacid generator. The photoacid generator, upon exposure to electromagnetic radiation in the subsequent exposure stage, alters the solubility of the photoresist in the development process. The electromagnetic radiation may have any suitable wavelength, for example, a 193 nm ArF laser, an electron beam, an ion beam, or other suitable source.

In an exposure stage, a photomask or reticle may be used to selectively expose certain regions of the substrate to electromagnetic radiation. Other exposure methods may be maskless exposure methods. Exposure to light may decompose the photo acid generator, which generates acid and results in a latent acid image in the resist resin. After exposure, the substrate may be heated in a post-exposure bake process. During the post-exposure bake process, the acid generated by the photoacid generator reacts with the resist resin, changing the solubility of the resist during the subsequent development process.

After the post-exposure bake, the substrate, particularly the photoresist layer, may be developed and rinsed. Depending on the type of photoresist used, regions of the substrate that were exposed to electromagnetic radiation may either be resistant to removal or more prone to removal. After development and rinsing, the pattern of the mask is transferred to the substrate using a wet or dry etch process.

In a recent development, an electrode assembly is utilized to generate an electric field to a photoresist layer disposed on the substrate prior to or after an exposure process so as to modify chemical properties of a portion of the photoresist layer where the electromagnetic radiation is transmitted to for improving lithography exposure/development resolution. However, the challenges in implementing such systems have not yet been adequately overcome.

Therefore, there is a need for apparatus for improving post exposure bake and development processes.

SUMMARY

In one implementation, a platform apparatus is provided. The apparatus includes a factory interface, a plumbing module, and a process module disposed between the factory interface and the plumbing module. The process module includes a central region having a robot disposed therein and a plurality of process stations disposed about the central region. Each process station includes a process chamber and a post process chamber in a stacked arrangement.

In another implementation, a platform apparatus is provided. The apparatus includes a factory interface, a plumbing module, and a process module disposed between the factory interface and the plumbing module. The process module includes a central region having a robot disposed therein. The robot includes a plurality of end effectors and the end effectors are moveable in three axes. A plurality of process stations are disposed about the central region and each process station includes a process chamber and a post process chamber in a stacked arrangement.

In yet another implementation, a platform apparatus is provided. The apparatus includes a factory interface and an intermediate module disposed adjacent the factory interface. A buffer station is disposed in the intermediate module and a support module is disposed adjacent the intermediate module. A plurality of cleaning stations are disposed in the support module and a process module is disposed adjacent to the support module. The process module includes a plurality of process stations and each process station includes a process chamber and a post process chamber in a stacked arrangement and a plumbing module dedicated to each process station.

BRIEF DESCRIPTION OF THE DRAWINGS

So that the manner in which the above recited features of the present disclosure can be understood in detail, a more particular description of the disclosure, briefly summarized above, may be had by reference to implementations, some of which are illustrated in the appended drawings. It is to be noted, however, that the appended drawings illustrate only exemplary implementations and are therefore not to be considered limiting of its scope, may admit to other equally effective implementations.

FIG. **1** illustrates a schematic, cross-sectional view of a process chamber according to implementations described herein.

FIG. **2** illustrates a detailed view of a portion of the process chamber of FIG. **1** according to implementations described herein.

FIG. **3** illustrates a post process chamber according to implementations described herein.

FIG. **4** illustrates a perspective view of a process platform according to implementations described herein.

FIG. **5** illustrates a schematic, plan view of the process platform of FIG. **4** according to implementations described herein.

FIG. **6** is a schematic, side view of a process chamber and a post-process chamber arrangement in the process platform of FIG. **4** according to implementations described herein.

FIG. **7** is a schematic, side view of a process chamber and a post-process chamber arrangement in the process platform of FIG. **4** according to implementations described herein.

FIG. **8** illustrates a perspective view of a process platform according to implementations described herein.

To facilitate understanding, identical reference numerals have been used, where possible, to designate identical elements that are common to the figures. It is contemplated that elements and features of one implementation may be beneficially incorporated in other implementations without further recitation.

DETAILED DESCRIPTION

Implementations described herein relate to apparatus for post exposure processing. More specifically, implementations described herein relate to field-guided post exposure process chambers and cool down/development chambers implemented on process platforms. In one implementation, a plurality of post exposure process chamber and cool/down development chamber pairs are positioned on a process platform in a stacked arrangement and utilize a shared plumbing module. In another implementation, a plurality of post exposure process chamber and cool down/development chambers are positioned on a process platform in a linear arrangement and each of the chambers utilize an individually dedicated plumbing module.

FIG. **1** illustrates a schematic, cross-sectional view of a process chamber **100** according to implementations described herein. In one implementation, the process chamber **100** is configured for performing immersion field guided post exposure bake (iFGPEB) processes. The chamber **100** is positioned in a vertical orientation such that when a substrate is being processed, a major axis of the substrate is oriented vertically and a minor axis of the substrate is oriented horizontally. The chamber **100** includes a chamber body **102**, which is manufactured from a metallic material, such as aluminum, stainless steel, and alloys and combinations thereof. Alternatively, the chamber body **102** is manufactured from polymer materials, such as polytetrafluoroethylene (PTFE), or high temperature plastics, such as polyether ether ketone (PEEK).

The body **102** defines, at least partially, a process volume **104** therein. For example, a sidewall **148** of the body **102** defines a diameter of the process volume **104**. A major axis of the process volume **104** is oriented vertically and a minor axis of the process volume **104** is oriented horizontally. A first plurality of fluid ports **126** are formed in the chamber body **102** through the sidewall **148**. A second plurality of fluid ports **128** are also formed in the sidewall **148** of the chamber body **102** opposite the first plurality of fluid ports **126**. The first plurality of fluid ports **126** are in fluid communication with a process fluid source **132** via first conduit **134**. The second plurality of fluid ports **128** are in fluid communication with a fluid outlet **136** via a second conduit **138**. The process fluid source **132**, either alone or in combination with other apparatus, is configured to preheat process fluid to a temperature of between about 70° C. and about 130° C., such as about 110° C., prior to the fluid entering the process volume **104**.

In one implementation, a purge gas source **150** is also in fluid communication with the process volume **104** via the first fluid conduit **134** and the first plurality of fluid ports **126**. Gases provided by the purge gas source **150** may include nitrogen, argon, inert gases and the like to purge the processing volume **104** during or after iFGPEB processing. When desired, purge gases may be exhausted from the processing volume **104** via the fluid outlet **136**.

A door **106** is operably coupled to the chamber body **102**. In the illustrated implementation, the door **106** is oriented in a processing position such that the door **106** is disposed adjacent to and abuts the chamber body **102**. The door **106** is formed from materials similar to the materials selected for the chamber body **102**. Alternatively, the chamber body may be formed from a first material, such as a polymeric material, and the door **106** may be formed from a second material different from the first material, such as a metallic material. A shaft **107** extends through the door **106** and provides an axis (i.e. the Z-axis) about which the door **106** rotates to open and close the door **106**.

The door **106** may be coupled to a track (not shown) and the door **106** is configured to translate along the track in the X-axis. A motor (not shown) may be coupled to the door **106** and/or the track to facilitate movement of the door **106** along the X-axis. Although the door **106** is illustrated in a closed processing position, opening and closing of the door **106** may be performed by moving the door **106** away from the chamber body **102** along the X-axis prior to rotating the door **106** about the Z-axis. For example, the door **106** may rotate about 90° from the illustrated processing position to a loading position such that positioning of a substrate **110** on a first electrode **108** can be performed with a reduced probability of substrate breakage during loading.

A backing plate **112** is coupled to the door **106** and the first electrode **108** is coupled to the backing plate **112**. The backing plate **112** is formed from materials similar to the door **106** or the chamber body **102**, depending on the desired implementation. The first electrode **108** may be formed from an electrically conductive metallic material. In addition, the material utilized for the first electrode **108** may be a non-oxidative material. The materials selected for the first electrode **108** provide for desirable current uniformity and low resistance across the surface of the first electrode **108**. In certain implementations, the first electrode **108** is a segmented electrode configured to introduce voltage non-uniformities across the surface of the first electrode **108**. In this implementation, a plurality of power sources are utilized to power different segments of the first electrode **108**.

The first electrode **108** is sized to accommodate attachment of the substrate **110** thereon. The first electrode **108** is also sized to allow for positioning adjacent the chamber body **102** and the process volume **104**. In one implementation, the first electrode **108** is fixably coupled to the backing plate **112** and the door **106**. In another implementation, the first electrode **108** is rotatably coupled to the backing plate **112** and the door **106**. In this implementation, a motor **109** is coupled to the door **106** and is configured to impart rotational movement on either the backing plate **112** or the first electrode **108**. In one implementation, the first electrode **108** is configured as a ground electrode.

A vacuum source **116** is in fluid communication with a substrate receiving surface of the first electrode **108**. The vacuum source **116** is coupled to a conduit **114** which extends from the vacuum source **116** through the door **106**, the backing plate **112**, and the first electrode **108**. Generally, the vacuum source **116** is configured to vacuum chuck the substrate **110** to the first electrode **108**.

A heat source **118**, a temperature sensing apparatus **120**, a power source **122**, and a sensing apparatus **124** are coupled to the first electrode **108**. The heat source **118** provides power to one or more heating elements, such as resistive heaters, disposed within the first electrode **108**. It is also contemplated that the heat source **118** may provide power to heating elements disposed within the backing plate **112**. The heat source **118** is generally configured to heat either the first electrode **108** and/or or the backing plate **112** to facilitate preheating of fluid during iFGPEB processes. The heat

source **118** may also be utilized to maintain a desired temperature of the process fluid during substrate processing in addition to or distinct from preheating the process fluid. In one implementation, the heat source **118** is configured to heat the first electrode **108** to a temperature of between about 70° C. and about 130° C., such as about 110° C.

The temperature sensing apparatus **120**, such as a thermocouple or the like, is communicatively coupled to the heat source **118** to provide temperature feedback and facilitate heating of the first electrode **108**. The power source **122** is configured to supply, for example, between about 1 V and about 20 kV to the first electrode **108**. Depending on the type of process fluid utilized, current generated by the power source **122** may be on the order of tens of nano-amps to hundreds of milliamps. In one implementation, the power source **122** is configured to generate electric fields ranging from about 1 kV/m to about 2 MV/m. In some implementations, the power source **122** is configured to operate in either voltage controlled or current controlled modes. In both modes, the power source may output AC, DC, and/or pulsed DC waveforms. Square or sine waves may be utilized if desired. The power source **122** may be configured to provide power at a frequency of between about 0.1 Hz and about 1 MHz, such as about 5 kHz. The duty cycle of the pulsed DC power or AC power may be between about 5% and about 95%, such as between about 20% and about 60%.

The rise and fall time of the pulsed DC power or AC power may be between about 1 ns and about 1000 ns, such as between about 10 ns and about 500 ns. The sensing apparatus **124**, such as a voltmeter or the like, is communicatively coupled to the power source **122** to provide electrical feedback and facilitate control of the power applied to the first electrode **108**. The sensing apparatus **124** may also be configured to sense a current applied to the first electrode **108** via the power source **122**.

A second electrode **130** is coupled to the chamber body **102** adjacent the process volume **104** and partially defined the process volume **104**. Similar to the first electrode **108**, the second electrode **130** is coupled to a heat source **140**, a temperature sensing apparatus **142**, a power source **144**, and a sensing apparatus **146**. The heat source **140**, a temperature sensing apparatus **142**, a power source **144**, and a sensing apparatus **146** may function similarly to the heat source **118**, a temperature sensing apparatus **120**, a power source **122**, and a sensing apparatus **124**. In one implementation, the second electrode **130** is an actively powered electrode and the first electrode **108** is a ground electrode. As a result of the aforementioned electrode arrangement, acid generated upon exposure of a resist disposed on the substrate **110** may be modulated during iFGPEB processing to improve patterning and resist de-protection characteristics.

FIG. **2** illustrates a detailed view of a portion of the process chamber **100** of FIG. **1** according to implementations described herein. The process volume **104** has a width **214** defined between the substrate **110** and the second electrode **130**. In one implementation, the width **214** of the process volume **104** is between about 1.0 mm and about 10 mm, such as between about 4.0 mm and about 4.5 mm. The relatively small gap between the substrate **110** and the second electrode **130** reduces the volume of the process volume **104** which enables utilization of reduced quantities of process fluid during iFGPEB processing. In addition, the width **214**, which defines a distance between the second electrode **130** and the substrate, is configured to provide for a substantially uniform electrical field across the surface of the substrate **110**. The substantially uniform field provides for improved patterning characteristics as a result of iFGPEB processing. Another benefit of the gap having the width **214** is a reduction in voltage utilized to generate the desired electrical field.

In operation, the process volume **104** is filled with process fluid during iFGPEB processing. In one implementation, a first flow rate utilized to fill the process volume **104** with process fluid prior to activation of an electric field is between about 5 L/min and about 10 L/min. Once the process volume **104** is filled with process fluid, the electric field is applied and a second flow rate of process fluid between about 0 L/min and about 5 L/min is utilized during iFGPEB processing. In one implementation, the process fluid fill time is between about 1 second and about 5 seconds and the processing time is between about 30 seconds and about 90 seconds, such as about 60 seconds. In one implementation, process fluid continues to flow during iFGPEB processing. In this implementation, the volume of the process volume **104** is exchanged between about 1 time and about 10 times per substrate processed. In another implementation, the process fluid is predominantly static during processing. In this implementation, the volume of the process volume **104** is not exchanged during substrate processing of each substrate.

In another operational implementation, a first flow rate is utilized to initially fill the process volume **104**. The first flow rate is less than 5 L/min for an amount of time to fill the process volume **104** such that the first fluid ports **126** are submerged. A second flow rate of greater than 5 L/min is them utilized to fill the remainder of the process volume **104**. During application of electric field in iFGPEB processing, a third flow rate of less than 5 L/min is utilized. The flow rate modulation between the first and second flow rates is configured to reduce turbulence of the fluid with in the process volume **104** and reduce or eliminate the formation of bubbles therein. However, if bubbles are formed, the buoyancy of the bubbles enables the bubbles to escape from the process volume **104** via the second fluid ports **128** in order to minimize the insulating effect of the bubbles on the electric field during iFGPEB processing. Accordingly, a more uniform electric field may be achieved to improve iFGPEB processing.

To reduce the probability of process fluid leakage out of the process volume, a plurality of O-rings are utilized to maintain the fluid containment integrity of the process volume. A first O-ring **202** is disposed in the first electrode **108** on the substrate receiving surface of the first electrode **108**. The first O-ring **202** may be positioned on the first electrode radially inward from an outer diameter of the substrate **110**.

In one example, the first O-ring **202** is positioned on the first electrode **108** a distance between about 1 mm and about 10 mm radially inward from the outer diameter of the substrate **110**. The first O-ring is positioned to contact the backside of the substrate **110** when the substrate is chucked to the first electrode **108**. A first surface **206** of the sidewall **148** is shaped and sized to contact an edge region of the substrate **110** when the substrate **110** is in the illustrated processing position.

In one implementation, the first O-ring **202** is disposed in the first electrode **108** opposite the first surface **206** of the sidewall **148**. It is contemplated that the first O-ring **202** may prevent the leakage of process fluid from the process volume **104** to a region behind the substrate **110**, such as the substrate supporting surface of the first electrode **108**. Advantageously, vacuum chucking of the substrate **110** is maintained and process fluid is prevented from reaching the vacuum source **116**.

The first electrode **108** has a ledge **210** disposed radially outward of the first O-ring. The ledge **210** is disposed radially outward from the position of the first O-ring **202**. A second O-ring **204** is coupled to the first electrode **108** radially outward of the ledge **210**. A second surface **208** of the sidewall **148** is shaped and sized to contact the first electrode **108** adjacent to and extending radially inward from the outer diameter of the first electrode **108**. In one implementation, the second O-ring **204** is disposed in contact with the second surface **208** of the sidewall **148** when the substrate **110** is disposed in a processing position. It is contemplated that the second O-ring **204** may prevent the leakage of process fluid from the process volume **108** beyond the outer diameter of the first electrode **108**.

A third O-ring **212** is coupled to the second electrode **130** along an outer diameter of the second electrode **130**. The third O-ring **212** is also disposed in contact with the sidewall **148** of the chamber body **102**. The third O-ring **212** is configured to prevent process fluid from flowing behind the second electrode **130**. Each of the O-rings **202**, **204**, **212** are formed from an elastomeric material, such as a polymer or the like. In one implementation, the O-rings **202**, **204**, **212** have a circular cross-section. In another implementation, the O-rings **202**, **204**, **212** have a non-circular cross-section, such as a triangular cross section or the like. It is also contemplated that each of the O-rings **202**, **204**, **212** are subjected to a compressive force suitable to prevent the passage of process fluid beyond the O-rings **202**, **204**, **212** and fluidly seal the process volume **104**.

FIG. **3** illustrates a post process chamber **300** according to implementations described herein. After iFGPEB processing of a substrate in the process chamber **100**, the substrate is transferred to the post process chamber **300**. The post process chamber **300** includes a chamber body **302** defining a process volume **304** and a pedestal **308** disposed in the process volume **304**. A substrate **306** positioned on the pedestal **308** is post processed by cooling and rinsing the substrate **306**. By combining cooling and rinsing, the bake to cool delay of substrate processing is minimized.

When the substrate **306** is positioned on the pedestal **308**, the substrate is vacuum chucked by application of vacuum from a vacuum source **314**. Cooling of the substrate **306** begins once the substrate **306** is chucked. Fluid conduits **310** are formed in the pedestal **308** and the fluid conduits **310** are in fluid communication with a cooling fluid source **312**. Cooling fluid is flowed through the fluid conduits **310** to cool the substrate **306**.

During cooling, the substrate **306** is also rinsed to remove any remaining process fluid still present on the substrate surface. Rinse fluid is dispensed onto the device side of the substrate **306** from a fluid delivery arm **318** which may include fluid delivery nozzles **320**. Rinse fluid, such as de-ionized water or the like, is provided from a rinse fluid source **322** via the arm **318** and the nozzles **320**.

After rinsing and cooling, the substrate **306** is optionally spin dried by rotating the pedestal **308**. The pedestal **308** is coupled to a power source **316** which enables rotation of the pedestal **308**. During spin drying of the substrate **306**, a shield **324** is raised to collect fluid spun off of the substrate **306**. In certain implementations, the shield **324** is also raised during cooling and/or rinsing of the substrate **306**. The shield **324** is ring like in shape and sized with an inner diameter greater than a diameter of the pedestal **308**. The shield **324** is also disposed radially outward of the pedestal **308**. The shield **324** is coupled to a motor **328** which raises and lowers the shield **324** such that the shield **324** extends above the substrate **306**. Fluid collected during spin drying by the shield **324** is removed from the process volume **304** via a drain **326**. It is noted that during cooling and rinsing of the substrate **306**, the shield **324** may optionally be disposed in a lowered position and subsequently raised during spin drying of the substrate **306**. The shield **324** may also be lowered during loading and unloading of the substrate **306**.

Once the substrate **306** has been dried, resist on the substrate **306** is developed by the application of a developer, such as tetramethylammonium hydroxide (TMAH). In one implementation, the developer is dispensed from the arm **318** and nozzles **320**. After development, the substrate **306** is rinsed with deionized water and dried again to prepare the substrate **306** for subsequent processing.

FIG. **4** illustrates a perspective view of a process platform **400** according to implementations described herein. One example of the process platform **400** is the BLAZER™ platform, available from Applied Materials, Inc., Santa Clara, Calif. It is contemplated that other suitably configured platforms from other manufacturers may also be utilized in accordance with the implementations described herein.

The process platform **400** includes a factory interface **402**, a process module **404**, and a plumbing module **406**. The factory interface **402** is coupled to the process module **404** and the process module **404** is coupled to the plumbing module **406**. The factory interface **402** includes a plurality of front opening unified pods (FOUPs) **502**, such as four FOUPs **502**. However, it is contemplated that the factory interface **402** may utilize a greater or lesser number of FOUPs **502**, depending upon the throughput capability of the process module **404**.

The process module **404** includes a plurality of process chambers. In one implementation, the process module **404** includes a plurality of process chambers **100** and a plurality of post process chambers **300**. It is contemplated that the process module **404** may be implemented with corresponding numbers of process chambers **100** and post process chambers **300**. In one example, the process module **404** includes four process chambers **100** and four post process chambers **300**. In another example, the process module **404** includes six process chamber s **100** and six post process chambers **300**. It is believed that utilizing pairs of process and post process chambers **100**, **300** provides for improved process efficiency and increased throughput.

The process module **404** may also include a plurality of cleaning chambers. The cleaning chambers may be utilized in a variety of implementations, for example, pre-cleaning substrates prior to processing in the process chambers **100** or cleaning substrates after processing the post process chambers **300**. In an operational implementation, a substrate enters the process platform **400** through one of the FOUPs **502** where the substrate is transferred through the factory interface **402** to the process module **404**. The substrate is then processed in one of the process chambers **100** and transferred to a corresponding one of the post process chambers **300**. As described above, cleaning of the substrate is optionally performed before or after iFGPEB processing and development in the process module **404**. Upon completion of the iFGPEB processing and any desired post process cleaning, the substrate is returned to the factory interface **402** and one of the FOUPs **502**.

The plumbing module **406** includes a full complement of apparatus for performing iFGPEB processing utilizing the process chambers **100** and post process chambers **300** disposed in the process module **404**. The plumbing module **406** generally includes all fluid handling components for each of the chambers of the process module **404**. As such, the plumbing components are disposed in a single location

which is easily accessible for maintenance. In addition, the plumbing module **406** enables a single location for supply and return of fluids utilized in iFGPEB processing. The plumbing module **406** may also include in-situ fluid analysis apparatus. For example, the fluids utilized in iFGPEB processing may be analyzed for various aspects, such as temperature via a thermocouple, flow rate via a flow meter, etc. The ability to gather fluid data and other process data in-situ provides for more efficient operation of the platform **400** by enabling real time process parameter modulation.

The plumbing module **406** is configured to share certain components between the process chambers **100** and post process chambers **300** in order to reduce the cost associated with the plumbing apparatus complement. For example, instead of each process chamber **100** having individual plumbing components dedicated to a single process chamber **100**, the plumbing module utilized plumbing apparatus which are shared between the plurality of the process chambers **100**. Similarly, the post process chambers **300** utilize plumbing apparatus which are shared between the plurality of post process chamber **300**.

For operating the process chamber **100**, the plumbing module **406** includes a process fluid source reservoir having a volume sufficient to supply process fluid to the process chambers **100** in a sequential manner. For example, the process fluid source reservoir (an associated complement of plumbing components, e.g. flow meters, flow controllers, conduits, heaters, filters, valves, drains, etc.) is configured to continuously provide process fluid in a volume sufficient to operate the process chambers **100** sequentially. In another implementation, the process fluid reservoir and associated plumbing apparatus complement is configured to provide a volume of process fluid sufficient to operate the plurality of process chambers **100** concurrently.

Similarly, for operation of the post process chambers **300**, the plumbing module **406** includes at least a rinse fluid source reservoir, a cooling fluid source reservoir, a developer source reservoir and associated plumbing apparatus complement. The post process chambers **300** may be operated sequentially or concurrently and the plumbing apparatus complement and reservoirs are configured to facilitate processing in either implementation by providing sufficient volumes of fluid to enable efficient operation of the post process chambers **300**.

FIG. **5** illustrates a schematic, plan view of the process platform **400** of FIG. **4** according to implementations described herein. The process module **404**, which includes the process chambers **100** and post process chambers **300**, is configured with pairs of chambers **100** and **300** in process stations **504**, **506**, **508**, **510**. While four process stations are illustrated, it is contemplated that a lesser or greater number of process stations, such as six process stations, may be used according to the implementations described herein. The process stations **504**, **506**, **508**, **510** are disposed about a periphery of the process module **404** and a robot **512** is disposed in a central region **514** between the plurality of process stations **504**, **506**, **508**, **510**. Thus, the process stations **504**, **506**, **508**, **510** are disposed adjacent to the central region **514** and are positioned in proximity to the robot **512**.

In one implementation, the robot **512** has an arm with a single end effector sized to carry substrates between various modules **402**, **404** and process stations **504**, **506**, **508**, **510**. In another implementation, the robot **512** has two arms, each arm having an end effector, for carrying the substrates. In this implementation, a first end effector may be utilized to retrieve substrates from the factory interface **402** and deliver the substrates to a process chamber **100** of one of the process stations **504**, **506**, **508**, **510**. A second end effector is utilized to transfer the substrate processed in the process chamber **100** to the post process chamber **300** of the same process station. The second effector may be utilized to cool substrates retrieved from the process chamber **100**. In this implementation, the second end effector may be cooled, for example, by a fluid, and the surface area of the second end effector may be sufficiently large to contact the substrates to improve the rate of substrate cooling during substrate transfer. Subsequently, the first end effector may be utilized to transfer the substrate from the post process chamber **300** back to the factory interface **402**. Advantageously, it is contemplated that utilizing a robot with different end effectors designed for certain transfer operations may reduce the probability of substrate contamination between different process operations and improve throughput.

The robot **512** moves linearly in the X direction to retrieve substrates from the factory interface **402** and to deliver the substrates to various process stations **504**, **506**, **508**, **510** within the process module **404**. The robot **512** also moves in the Y and Z directions to deliver and retrieve substrates from the chambers **100**, **300** of the process stations **504**, **506**, **508**, **510**.

In an operational implementation, a substrate is delivered to a process chamber **100** of one of the process stations **504**, **506**, **508**, **510** and iFGPEB processing is performed for an amount of time between about 30 seconds and about 90 seconds, for example, about 60 seconds. During processing of the substrate, the robot **512** may transfer other substrates between chambers **100**, **300** of the process stations **504**, **506**, **508**, **510** or to and from the factory interface **402**. After the substrate has been iFGPEB processed in the process chamber **100**, the robot **512** transfers the substrate to the post process chamber **300** of the same process station having the process chamber **100** which iFGPEB processed the substrate. The post process operation, which includes a cool down and development process, may be performed for an amount of time between about 15 seconds and about 90 seconds, such as about 30 seconds. After post processing, the substrate may be optionally cleaned and then delivered back to the factory interface **402**.

FIG. **6** is a schematic, side view of a process chamber **100** and a post-process chamber **300** arrangement in the process platform of FIG. **4** according to implementations described herein. More specifically, FIG. **6** illustrates the arrangement of the process chamber **100** and post process chamber **300** in a single process station. In the illustrated implementation, the post process chamber **300** is disposed above the process chamber **100**. In other words, the post process chamber **300** is stacked on the process chamber **100**. The chambers **300**, **100** are also positioned such that openings of the chambers **300**, **100** face the central region **514** and the robot **512** to allow for ingress and egress of substrates.

FIG. **7** is a schematic, side view of a process chamber **100** and a post-process chamber **300** arrangement within the process platform of FIG. **4** according to implementations described herein. More specifically, FIG. **7** illustrates the arrangement of the process chamber **100** and post process chamber **300** in a single process station. In the illustrated implementation, the process chamber is disposed above the post process chamber **300**. In other words, the process chamber **100** is stacked on the post process chamber **300**. Similar to the implementation described with regard to FIG. **6**, the chambers **100**, **300** are positioned such that openings of the chambers **100**, **300** face the central region **514** and the robot to allow for ingress and egress of substrates.

By positioning the process chambers **100** and post process chamber **300** in a stacked arrangement in each of the process stations **504**, **506**, **508**, **510**, transfer time of substrates between the chambers **100**, **300** by the robot is reduced an improved throughput may be realized. While the above implementations have contemplated that a substrate is processed in one of the process stations **504**, **506**, **508**, **510**, it is contemplated that a substrate may be processed in a process chamber **100** of a first process station and a post process chamber **300** of a second process station different from the first process station.

FIG. **8** illustrates a perspective view of a process platform **800** according to implementations described herein. One example of the process platform **800** is the RAIDER® platform, available from Applied Materials, Inc., Santa Clara, Calif. It is contemplated that other suitably configured platforms from other manufacturers may also be utilized in accordance with the implementations described herein.

The process platform **800** includes a factory interface **802**, an intermediate module **804**, a support module **806**, and a process module **808**. The factory interface **802** is coupled to the intermediate module **804**, which is coupled to the support module **806**, which is coupled to the process module **808**. The factory interface **402** includes a plurality of front opening unified pods (FOUPs) **820**, such as three FOUPs **820**. However, it is contemplated that the factory interface **802** may utilize a greater or lesser number of FOUPs **820**, depending upon the throughput capability of the process module **808**.

The process module **808** includes a plurality of process stations **814**. The process stations **814** may be similar to the process stations **504**, **506**, **508**, **510** in that each process station **814** contains a stacked process chamber **100** and post process chamber **300**. While the illustrated implementation shows that the process chambers **100** are disposed on top of the post process chamber **30** (See FIG. **7**), it is contemplated, similar to FIG. **6**, that the post process chamber **300** may be disposed on top of the process chambers **100**. Accordingly, it is contemplated that the process module **808** is implemented with corresponding numbers of process chambers **100** and post process chambers **300**.

In one example, the process module **808** includes five process chambers **100** and five post process chambers **300** disposed on opposite sides of a centrally disposed robot track (not shown) for a total of ten process chambers **100** and ten post process chambers **300**. While five process stations **814** are illustrated, it is contemplated that four (eight total) or six (twelve total) process stations **814** may also be advantageously utilized. A plurality of plumbing modules **818** are also provided in the process module **808**. In this implementation, each process station **814** has a dedicated plumbing module **818**. A robot (not shown) similar to the robot **512** may also be disposed in the process module **808** and operate to transfer substrates between the chambers **100**, **300** of the process stations **814** and between the process module **808** and the support module **806**.

The support module **806** includes a plurality of cleaning chambers **822**. The cleaning chambers **822** are configured to rinse and spin dry substrates that have been iFGPEB processed in the process stations **814** of the process module **808**. It is contemplated that the cleaning chambers **822** may be configured to rinse both a device side and a backside of the substrate either sequentially or simultaneously. The cleaning chambers **822** may also clean substrates prior to processing in the process module **808**. A plurality of plumbing modules **816** are also provided in the support module **806**. In this implementation, each clean station **812** having a cleaning chamber **822** has a dedicated plumbing module **812**. Accordingly, the plumbing module **816** is configured to support cleaning of substrates with a complement of apparatus configured to enable cleaning operations. In certain implementations, the support module **806** may also have a robot (not shown) which transfers substrates between the clean stations **812** and the process module **808** or the intermediate module **804**. Alternatively, process module robot may move between the process module **808** and the support module **806** to enable substrate transfer.

The intermediate module **804** includes one or more buffer stations **810** to improve the efficiency of substrate transfer between the factory interface **802** and the support module **806**. The buffer station **810** may be utilized to compensate for process time disparities between process operations performed in the support module **806** and the process module **808**. The buffer stations **810** may also be temperature controlled to modulate substrate temperature prior to processing in the support module **806** or delivery back to the factory interface **802**.

In summation, implementations described herein provide for improved platforms for performing iFGPEB and associated process operations. Utilizing process stations having stacked process and post process chambers enables more efficient substrate transfer and increased throughput. In addition, various plumbing module configurations provide for improved process parameter modulation and maintenance operations. Accordingly, iFGPEB processing operations may be advantageously implemented on the apparatus describe herein.

While the foregoing is directed to implementations of the present disclosure, other and further implementations of the disclosure may be devised without departing from the basic scope thereof, and the scope thereof is determined by the claims that follow.

What is claimed is:

1. A process chamber, comprising:

a chamber body defining a process volume, wherein a major axis of the process volume is oriented vertically and a minor axis of the process volume is oriented horizontally;

a door coupled to the chamber body;

a first electrode coupled to the door, the first electrode configured to support a substrate thereon;

a first plurality of fluid ports formed in a sidewall of the chamber body adjacent the process volume; and

a second plurality of fluid ports formed in the sidewall of the chamber body adjacent the process volume opposite the first plurality of fluid ports; and

a power source communicatively coupled to the first electrode.

2. The process chamber of claim **1**, wherein the power source is provides a power ranging between about 1 V and about 20 kV to the first electrode.

3. The process chamber of claim **1**, wherein the power source provides a power with a frequency between about 0.1 Hz and about 1 MHz to the first electrode.

4. The process chamber of claim **1**, wherein the power source generates an electric field ranging between about 1 kV/m and about 2 MV/m within the process volume.

5. The process chamber of claim **1**, wherein the power source operates in a voltage-controlled mode.

6. The process chamber of claim **1**, wherein the power source operates in a current-controlled mode.

7. The process chamber of claim **1**, wherein the power source generates AC, DC, and pulsed DC waveforms to the first electrode.

8. The process chamber of claim 7, wherein the power source generates AC and pulsed DC power having a duty cycle between about 20% and about 60%.

9. The process chamber of claim 1, wherein the first electrode is coupled to the door via a backing plate.

10. The apparatus of claim 9, wherein the first electrode is configured to vacuum chuck a substrate thereon.

11. The process chamber of claim 1, further comprising:

a seal coupled to the first electrode, wherein the seal is configured to contact a backside of a substrate when a frontside of the substrate is disposed adjacent the process volume.

12. The process chamber of claim 1, further comprising:

a second electrode coupled to the chamber body, the second electrode at least partially defining the process volume.

13. The process chamber of claim 1, further comprising:

a process fluid source in fluid communication with the process volume via a first plurality of channels and first plurality of fluid ports.

14. The process chamber of claim 13, further comprising:

a fluid outlet in fluid communication with the process volume via a second plurality of channels and the second plurality of fluid ports.

15. The process chamber of claim 1, wherein the process chamber is coupled to a process module, wherein the process module comprises:

a central region having a robot disposed therein; and

a plurality of process stations disposed about the central region.

16. The process chamber of claim 15, wherein the process module is coupled to a plumbing module.

17. The process chamber of claim 16, wherein the plumbing module comprises a process fluid source reservoir shared by the plurality of process stations.

18. The process chamber of claim 15, wherein the process chamber is disposed in one of the plurality of process stations and comprises ingress/egress openings disposed adjacent to and facing the central region.

19. The process chamber of claim 15, wherein the process chamber is disposed on top of a post process chamber.

20. The apparatus of claim 19, wherein the post process chamber further comprises:

a second chamber body defining a second process volume;

a rotatable pedestal disposed within the process volume;

a fluid delivery arm configured to deliver cleaning fluid to the second process volume; and

a shield capable of being raised and lowered by a motor, the shield having an inner diameter greater than a diameter of the rotatable pedestal, wherein the shield is disposed radially outward of the rotatable pedestal.

* * * * *