US010935799B2

(12) **United States Patent**
Meyer Timmerman Thijssen et al.

(10) **Patent No.: US 10,935,799 B2**
(45) **Date of Patent: Mar. 2, 2021**

(54) **OPTICAL COMPONENT HAVING DEPTH MODULATED ANGLED GRATINGS AND METHOD OF FORMATION**

(71) Applicant: **APPLIED Materials, Inc.**, Santa Clara, CA (US)

(72) Inventors: **Rutger Meyer Timmerman Thijssen**, Sunnyvale, CA (US); **Ludovic Godet**, Boston, MA (US); **Morgan Evans**, Manchester, MA (US); **Joseph C. Olson**, Beverly, MA (US)

(73) Assignee: **Applied Materials, Inc.**, Santa Clara, CA (US)

(*) Notice: Subject to any disclaimer, the term of this patent is extended or adjusted under 35 U.S.C. 154(b) by 58 days.

(21) Appl. No.: **16/168,185**

(22) Filed: **Oct. 23, 2018**

(65) **Prior Publication Data**

US 2020/0124865 A1 Apr. 23, 2020

(51) **Int. Cl.**

G02B 5/18	(2006.01)
G02B 27/09	(2006.01)
G02B 27/01	(2006.01)

(52) **U.S. Cl.**

CPC ***G02B 27/0944*** (2013.01); ***G02B 5/1819*** (2013.01); ***G02B 27/0172*** (2013.01); *G02B 2027/0178* (2013.01)

(58) **Field of Classification Search**

CPC G02B 27/0172; G02B 27/0944; G02B 5/1857; G02B 5/1809; G02B 5/1819; G02B 2027/0174; G02B 2027/0178

(Continued)

(56) **References Cited**

U.S. PATENT DOCUMENTS

5,982,545	A *	11/1999	Su	G02B 5/1857 359/566
6,545,808	B1 *	4/2003	Ehbets	G02B 5/1857 359/15

(Continued)

FOREIGN PATENT DOCUMENTS

KR	20170037980	A	4/2017
WO	2016048729	A1	3/2016
WO	2018067500	A1	4/2018

OTHER PUBLICATIONS

International Search Report and Written Opinion dated Jan. 3, 2020 for PCT/US2019/051646 filed Sep. 18, 2019.

(Continued)

Primary Examiner — Audrey Y Chang

(74) *Attorney, Agent, or Firm* — Kacvinsky Daisak Bluni PLLC

(57) **ABSTRACT**

A method of forming an optical grating component. The method may include providing a substrate, the substrate comprising an underlayer and a hard mask layer, disposed on the underlayer. The method may include patterning the hard mask layer to define a grating field and etching the underlayer within the grating field to define a variable height of the underlayer along a first direction, the first direction being parallel to a plane of the substrate. The method may include forming an optical grating within the grating field using an angled ion etch, the optical grating comprising a plurality of angled structures, disposed at a non-zero angle of inclination with respect to a perpendicular to a plane of the substrate, wherein the plurality of angled structures define a variable depth along the first direction, based upon the variable height of the underlayer.

15 Claims, 11 Drawing Sheets

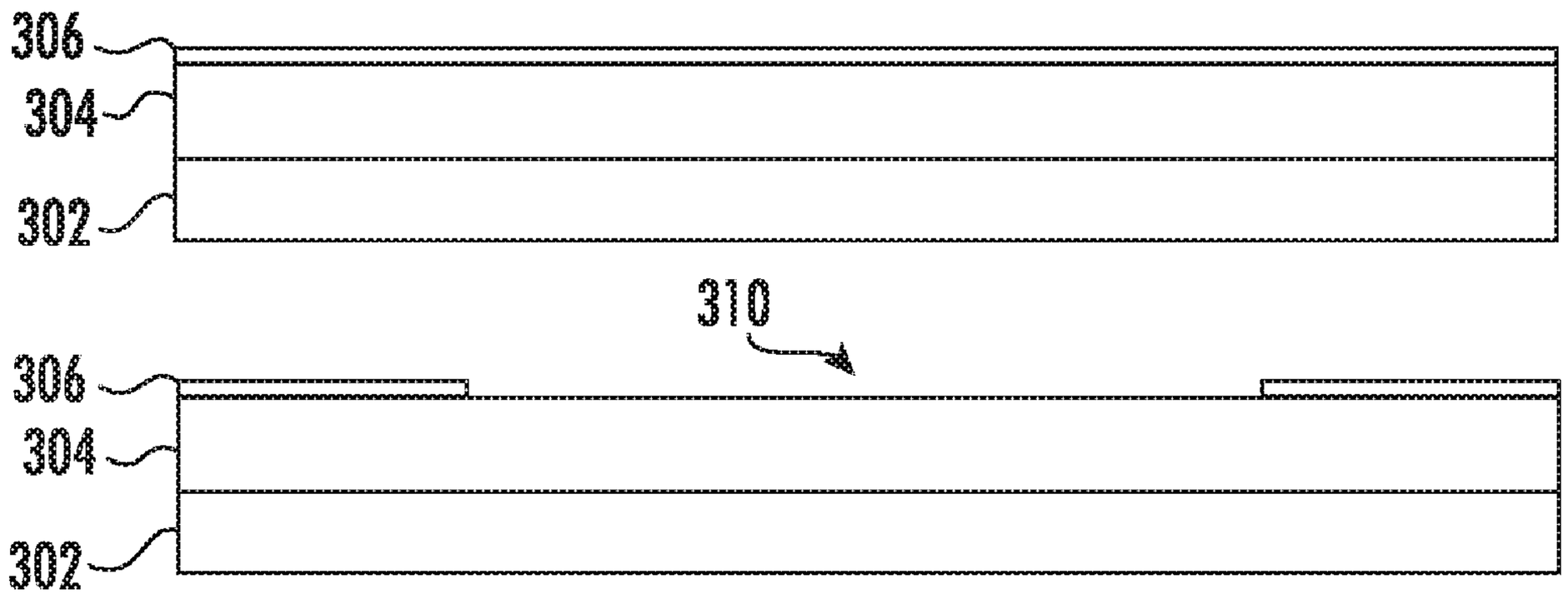

(58) **Field of Classification Search**
USPC 359/575, 576, 566, 569; 216/24
See application file for complete search history.

(56) **References Cited**

U.S. PATENT DOCUMENTS

2009/0268295	A1*	10/2009	Miller	G02B 1/11 359/576
2011/0038049	A1*	2/2011	Vallius	G02B 5/1809 359/575
2016/0033784	A1*	2/2016	Levola	G02B 6/0058 385/37
2016/0116739	A1	4/2016	Tekolste et al.	
2018/0052277	A1*	2/2018	Schowengerdt	G02C 11/10
2019/0018186	A1*	1/2019	Fattal	G02B 6/0038
2019/0258008	A1*	8/2019	Hautala	G02B 6/34

OTHER PUBLICATIONS

"Diffractive optics for virtual reality displays", Author: Tapani Levola, Society for Information Display 1071-0922/06/1405-0467; Journal of the SID 14/5, 2006; pp. 467-475.

* cited by examiner

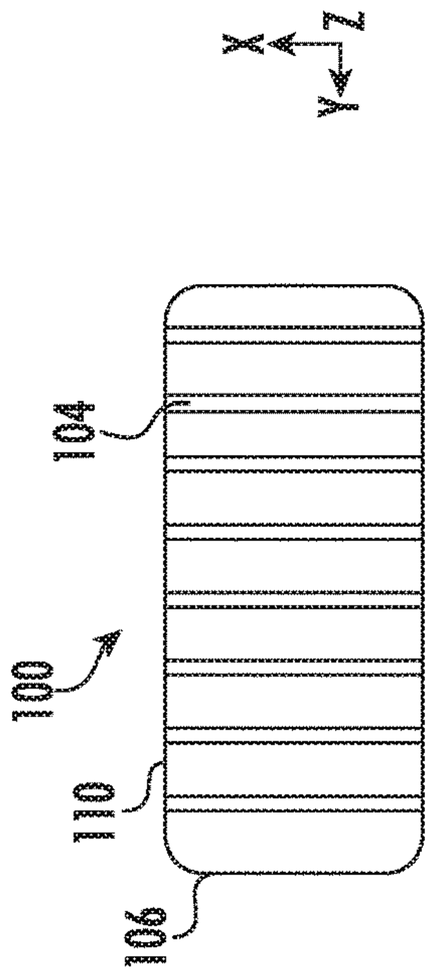

FIG. 1B

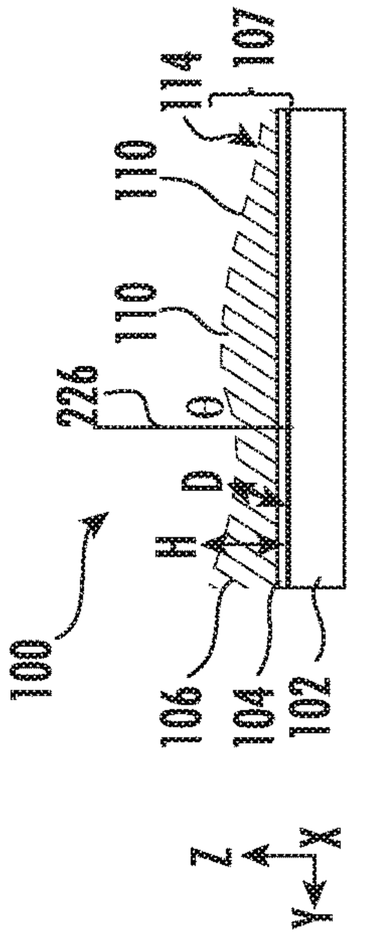

FIG. 1A

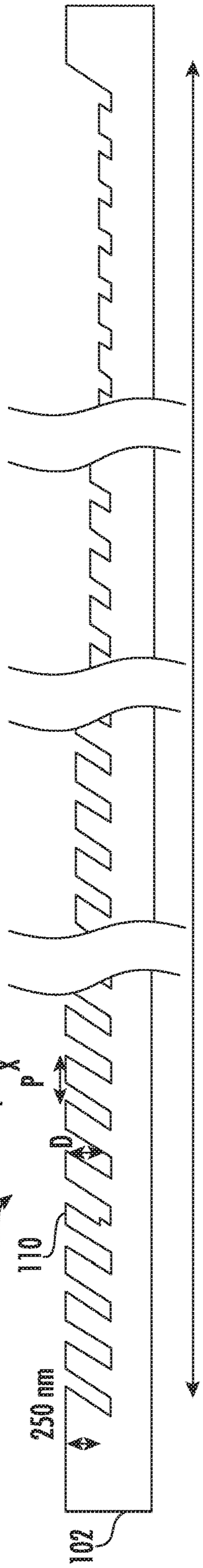

FIG. 1C

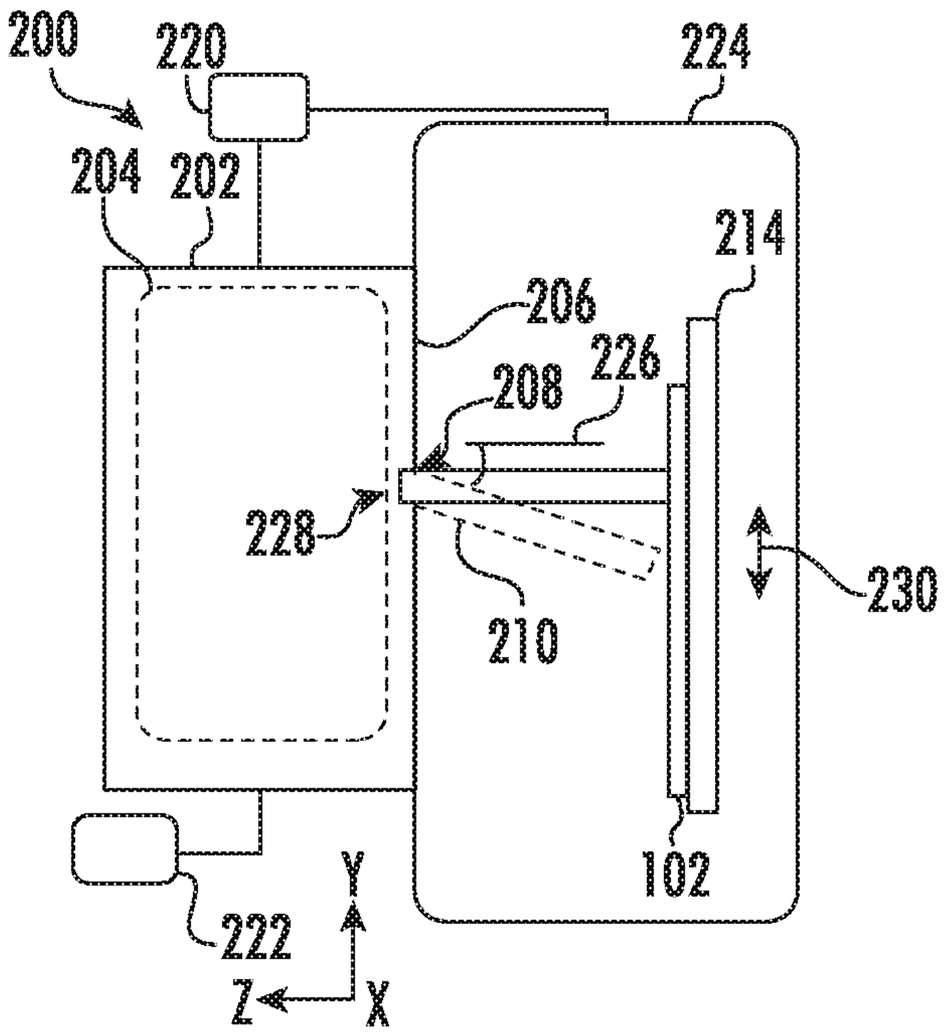
200
220
224
204
202
214
206
226
208
228
230
210
102
222
Y
Z
X

FIG. 2A

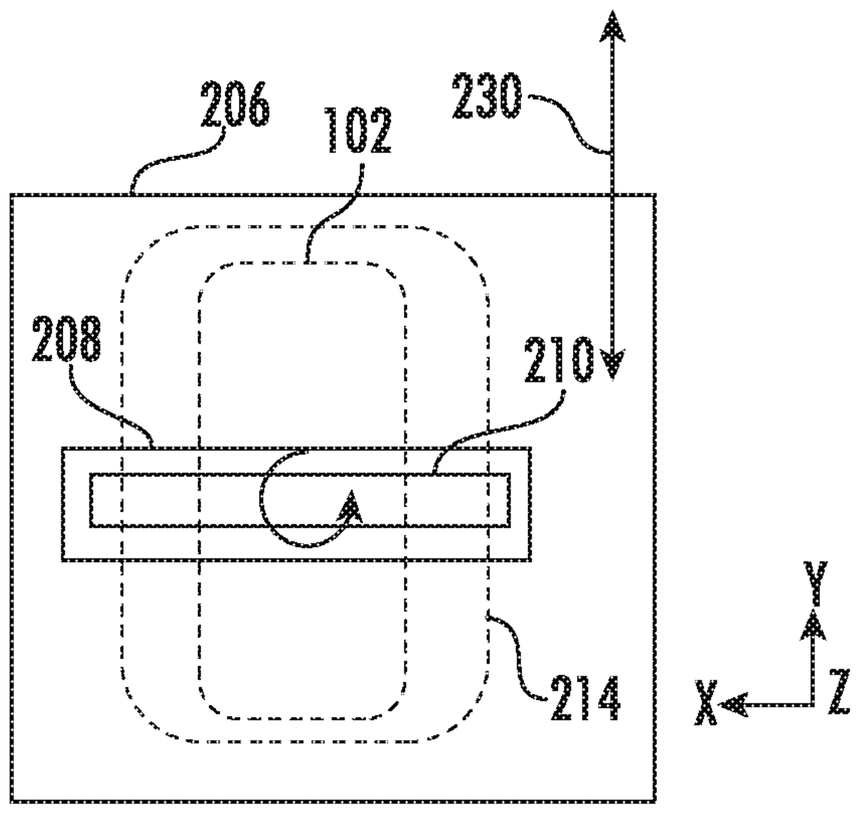
206
102
230
208
210
214
Y
X
Z

FIG. 2B

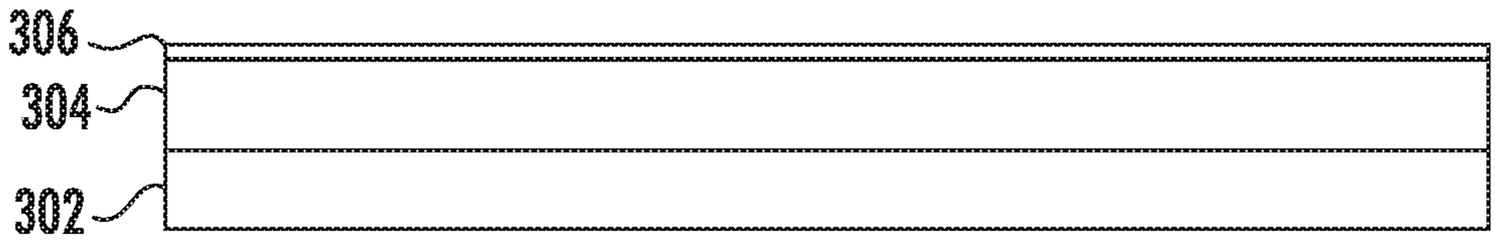

FIG. 3A

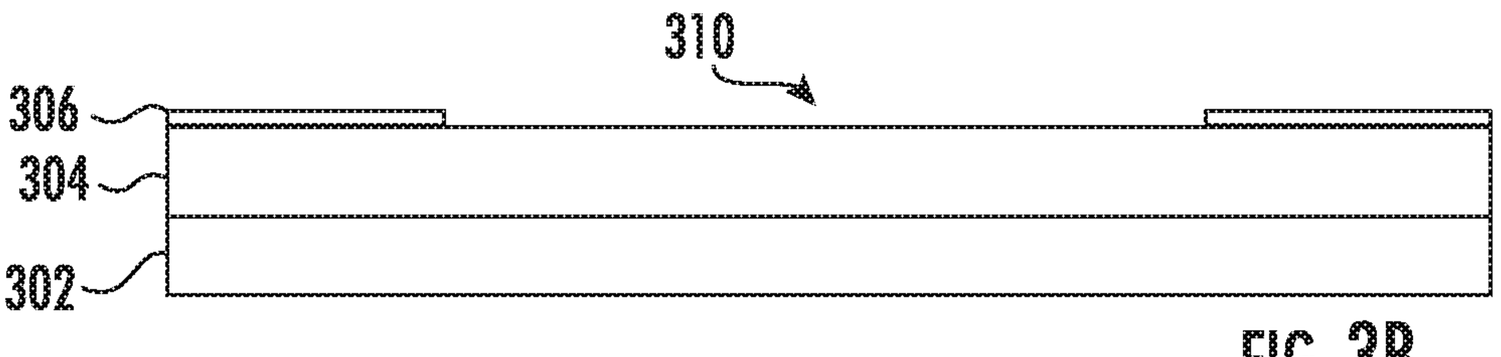

FIG. 3B

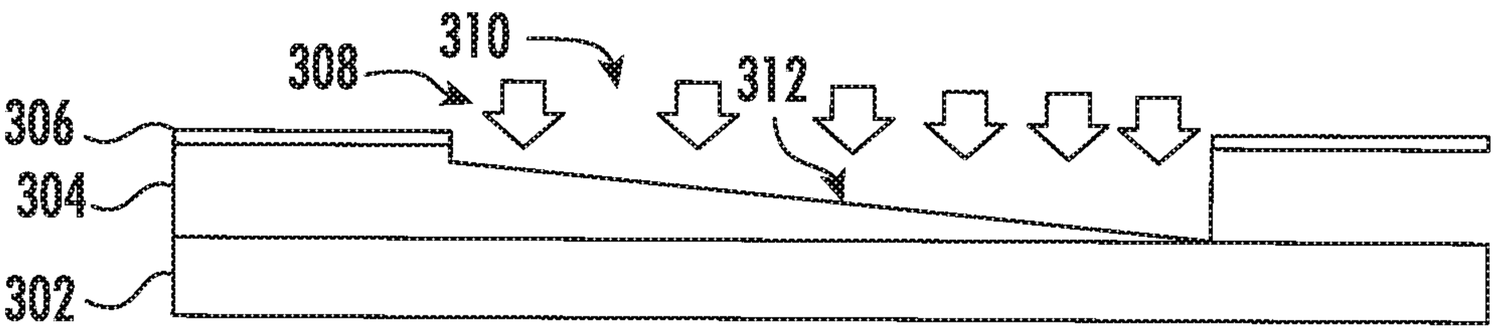

FIG. 3C

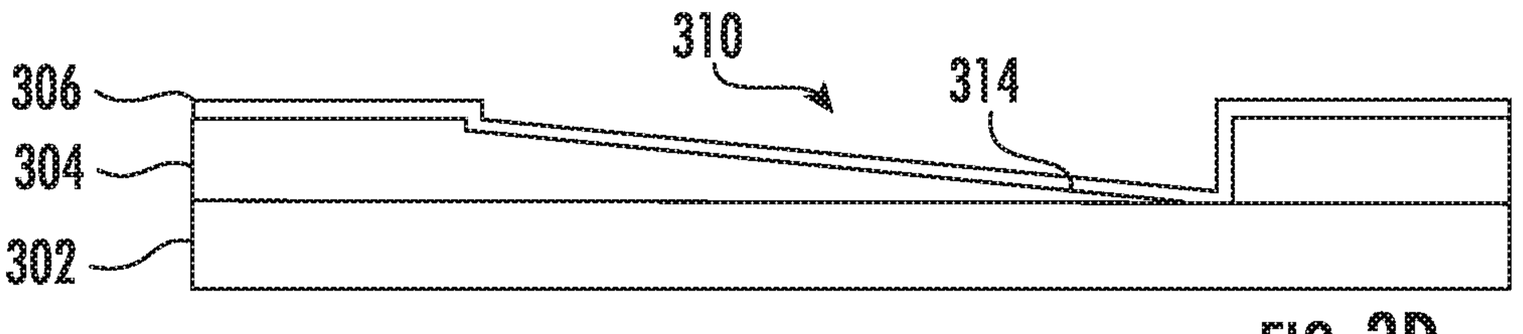

FIG. 3D

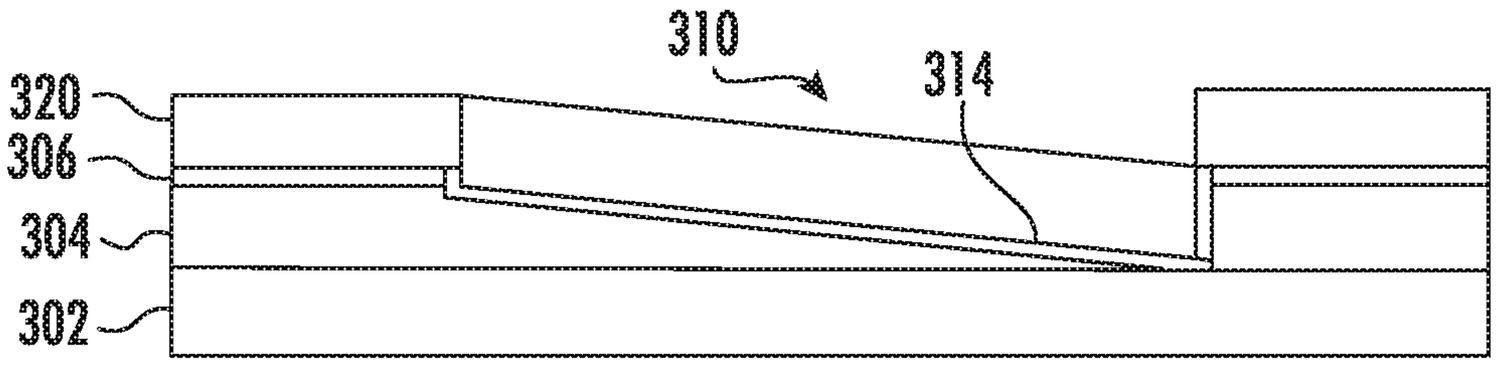

FIG. 3E

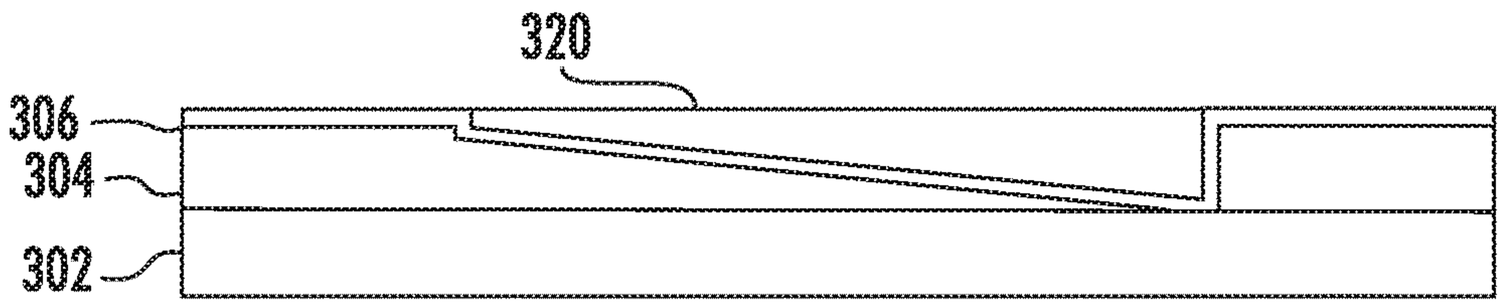

FIG. 3F

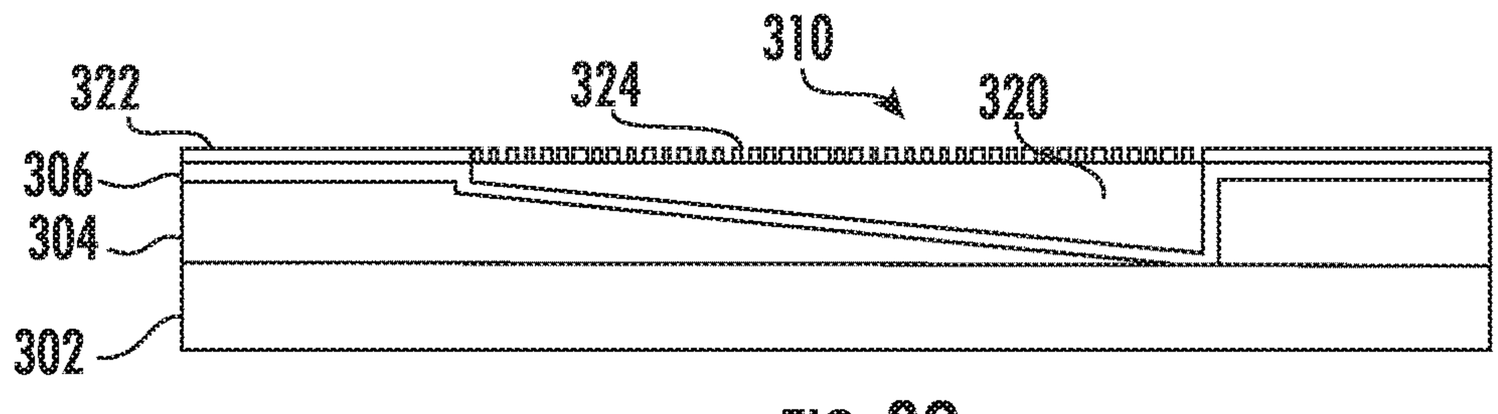

FIG. 3G

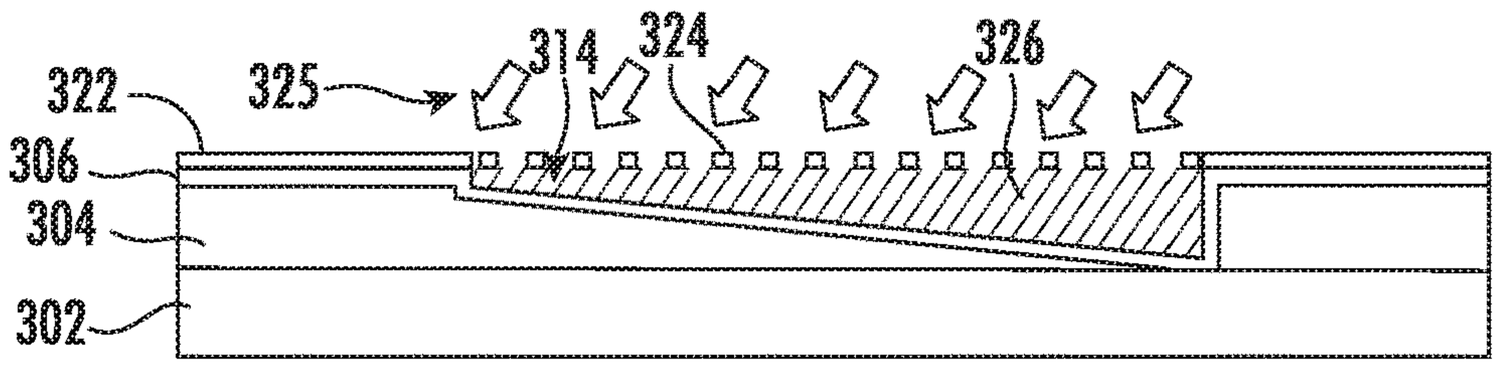

FIG. 3H

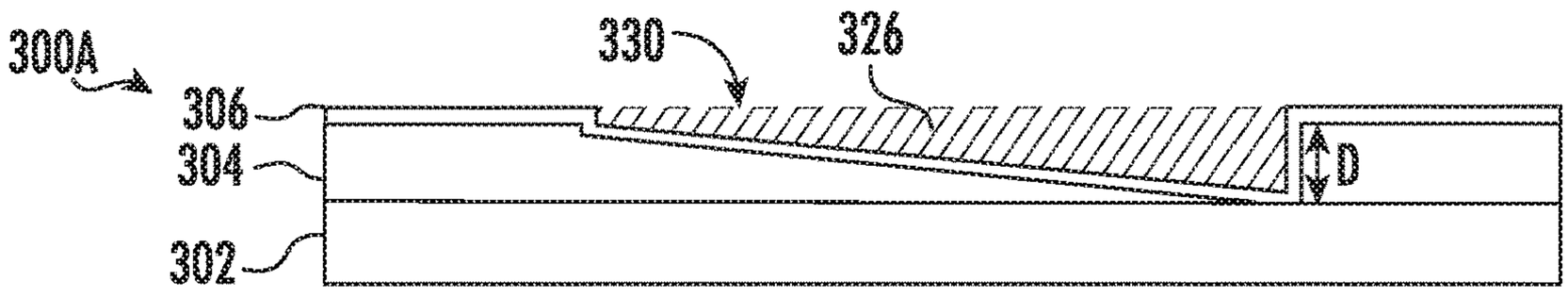

FIG. 3I

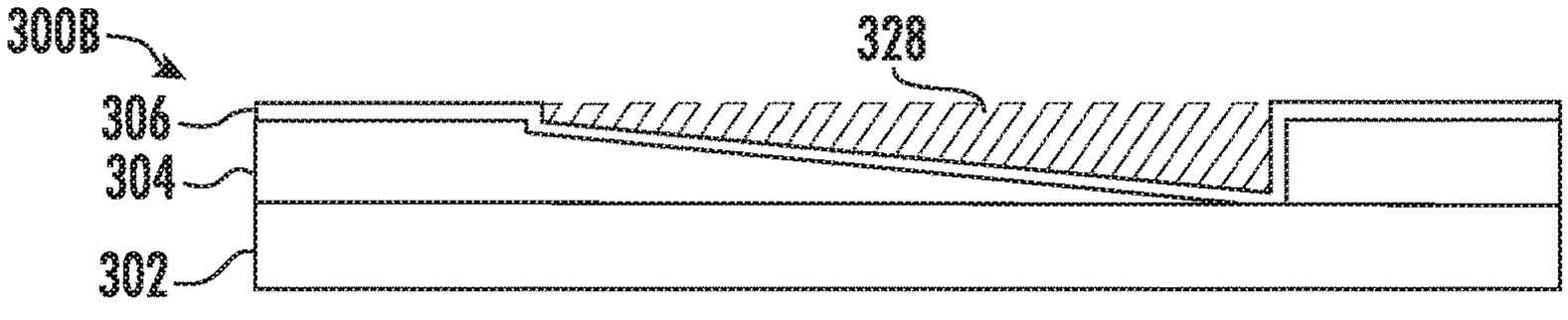

FIG. 3J



FIG. 4A

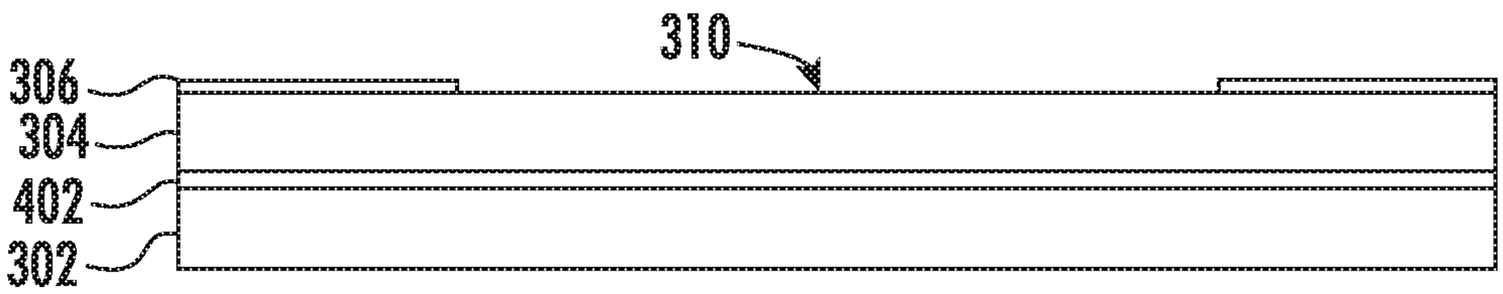

FIG. 4B

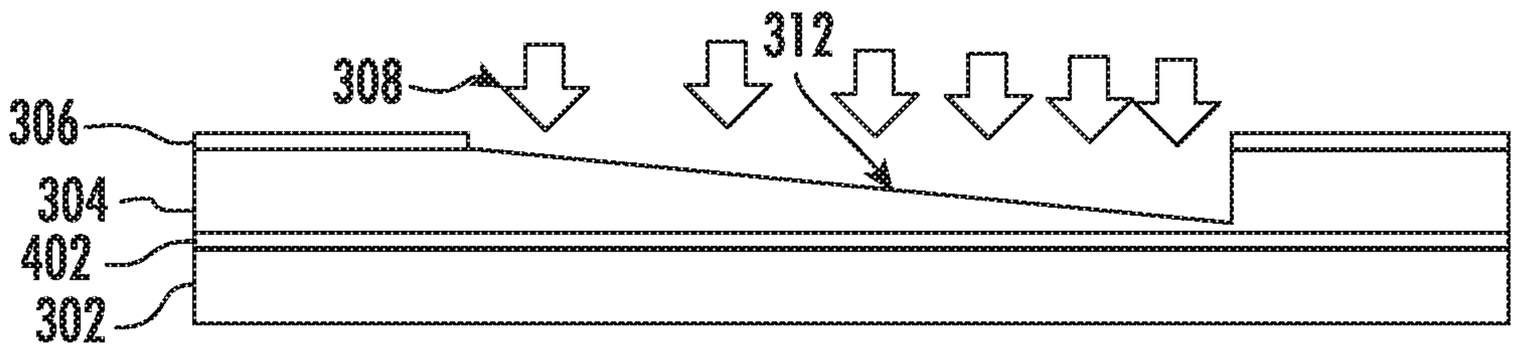

FIG. 4C

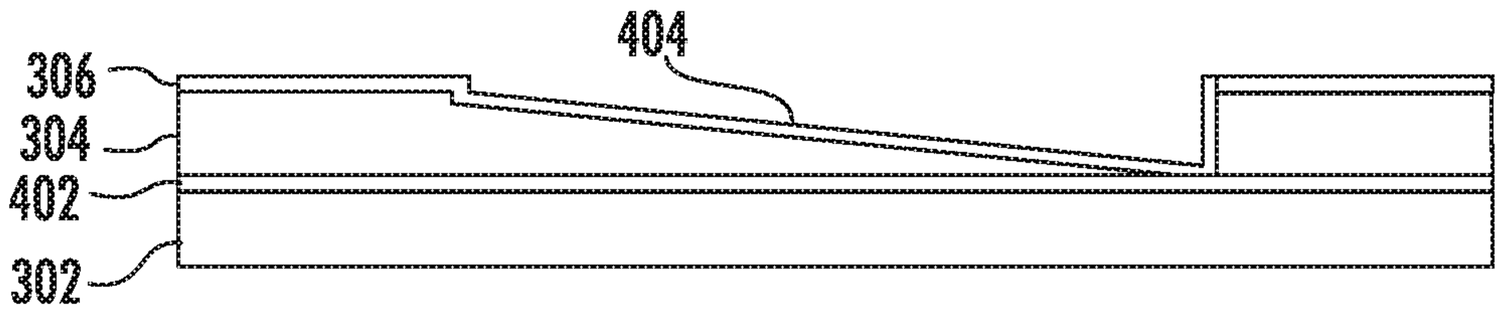

FIG. 4D

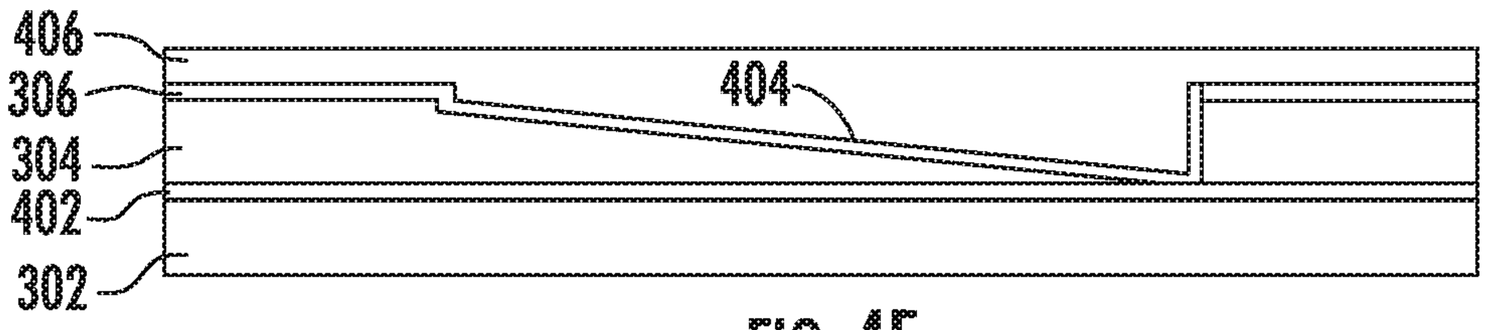

FIG. 4E

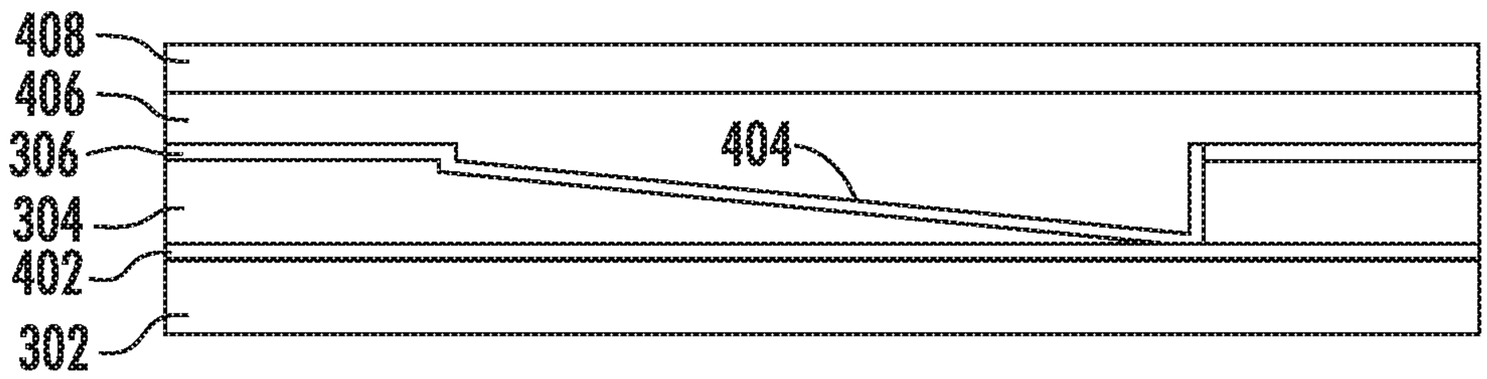

FIG. 4F

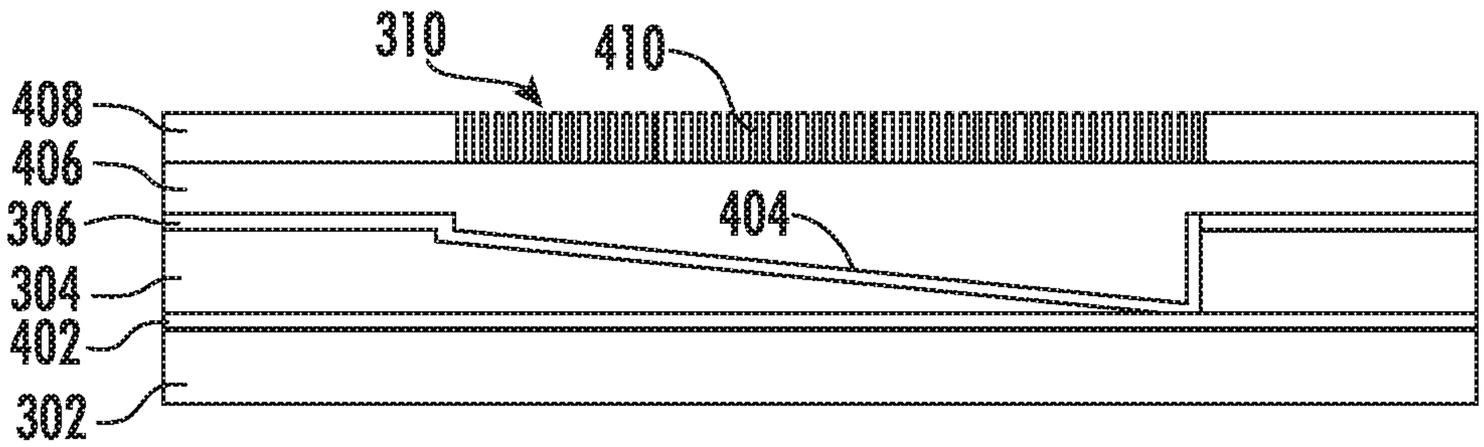

FIG. 4G

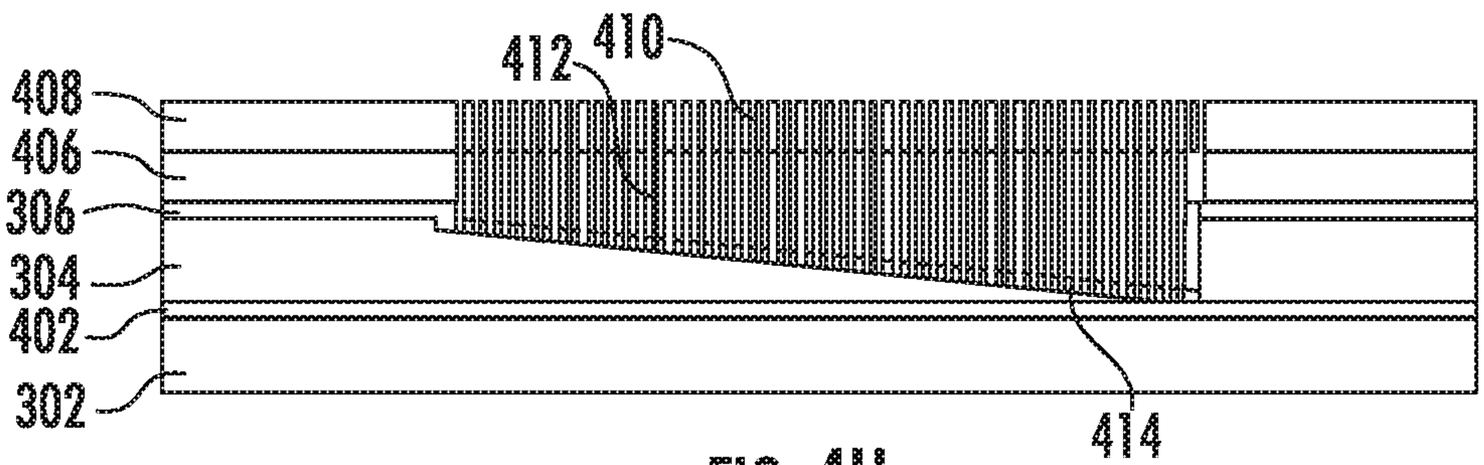

FIG. 4H

414

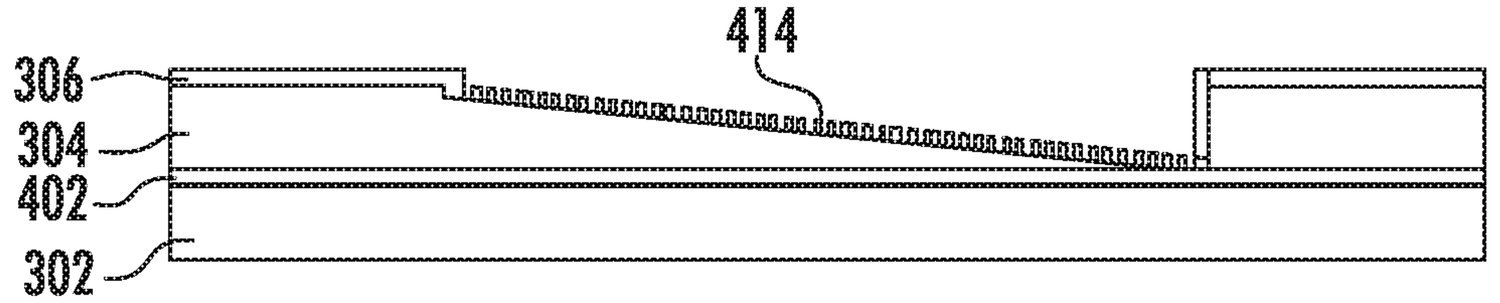

FIG. 4I

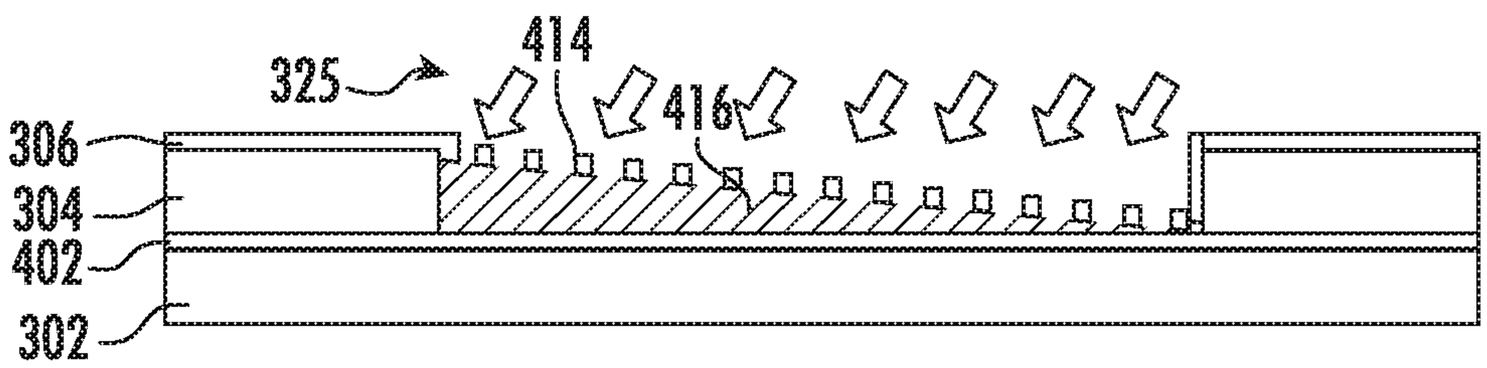

FIG. 4J

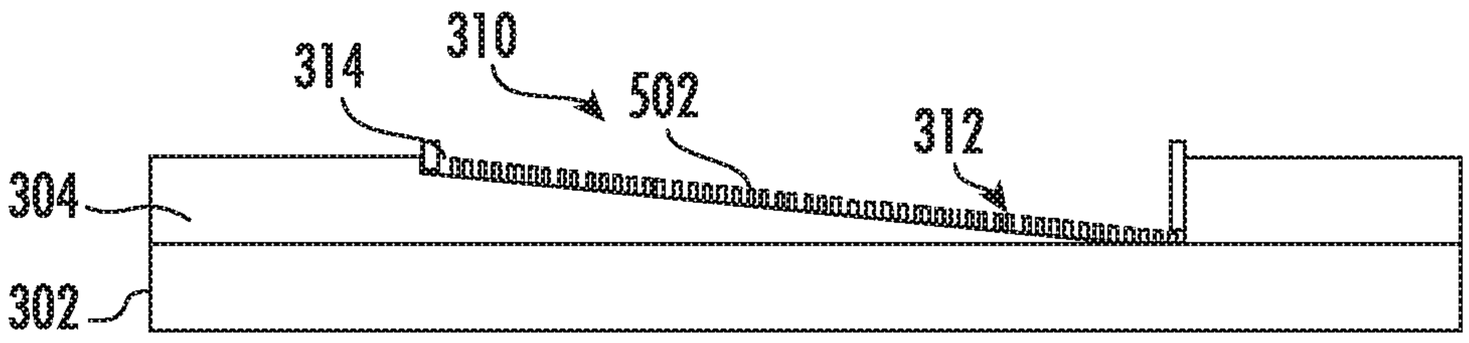

FIG. 5A

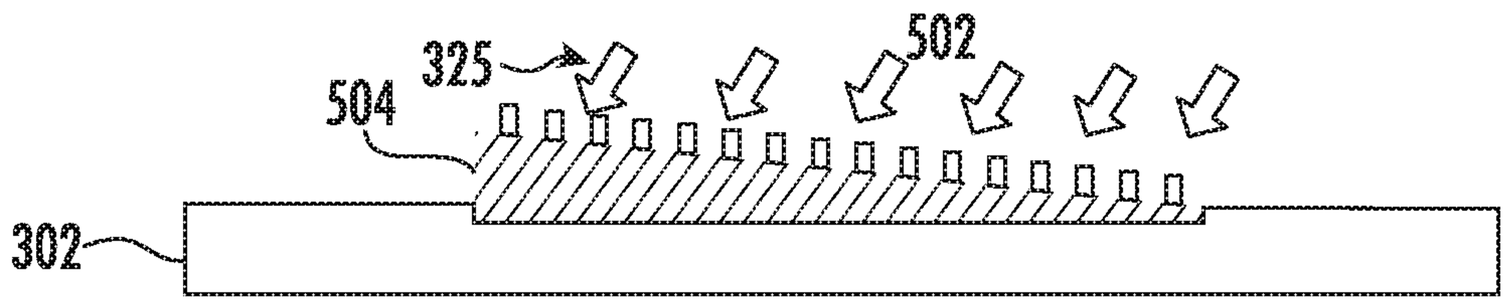

FIG. 5B

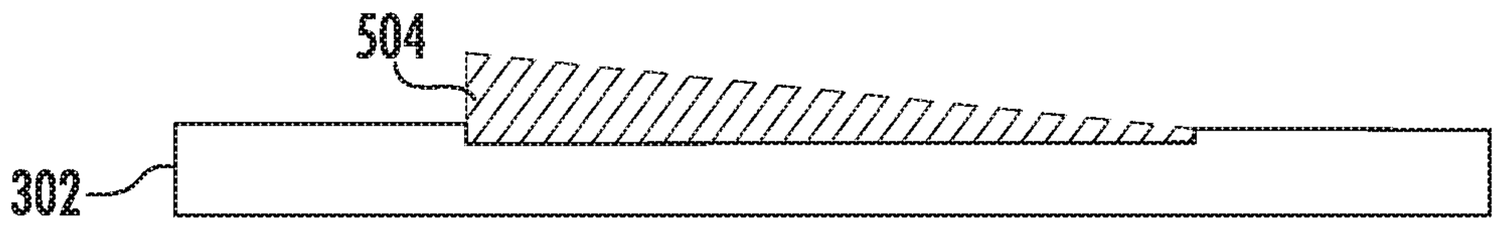

FIG. 5C

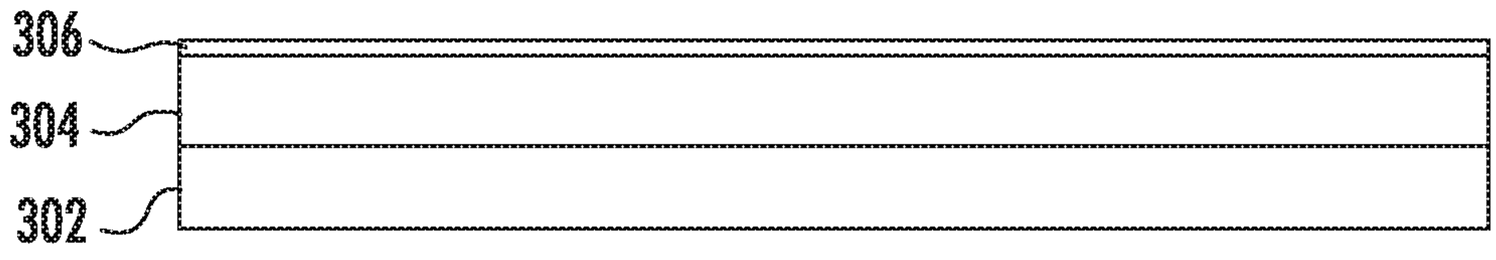

FIG. 6A

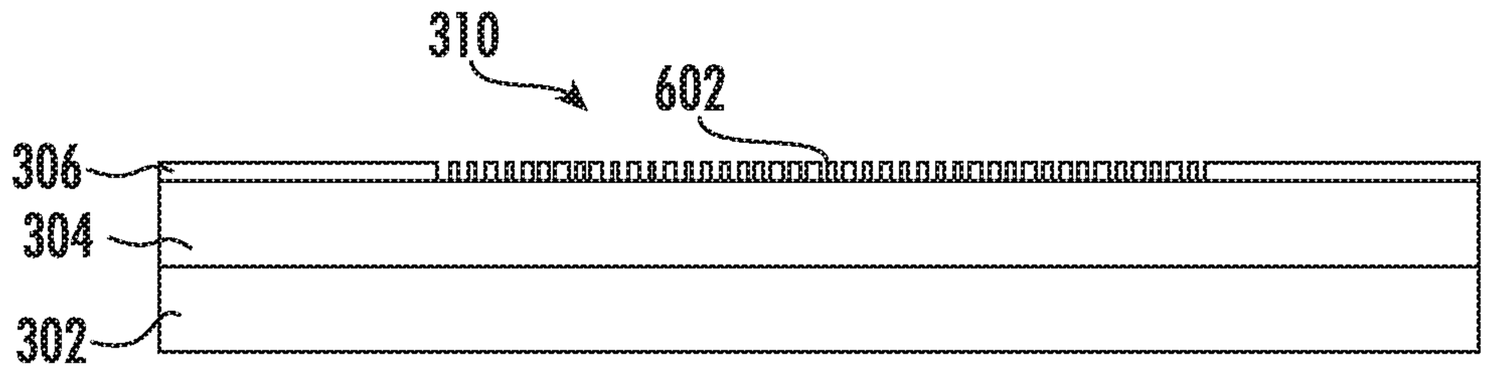

FIG. 6B

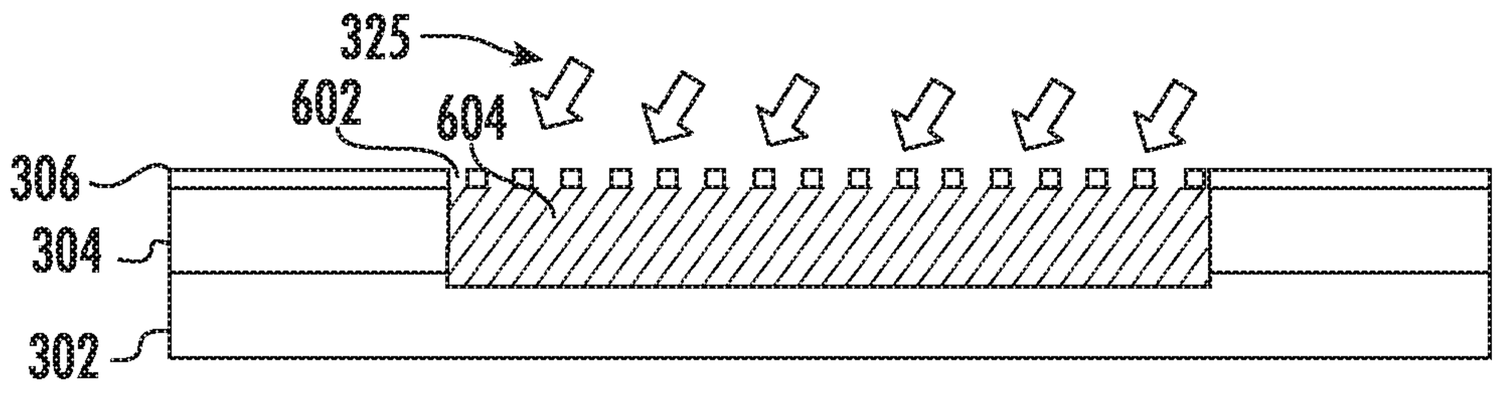

FIG. 6C

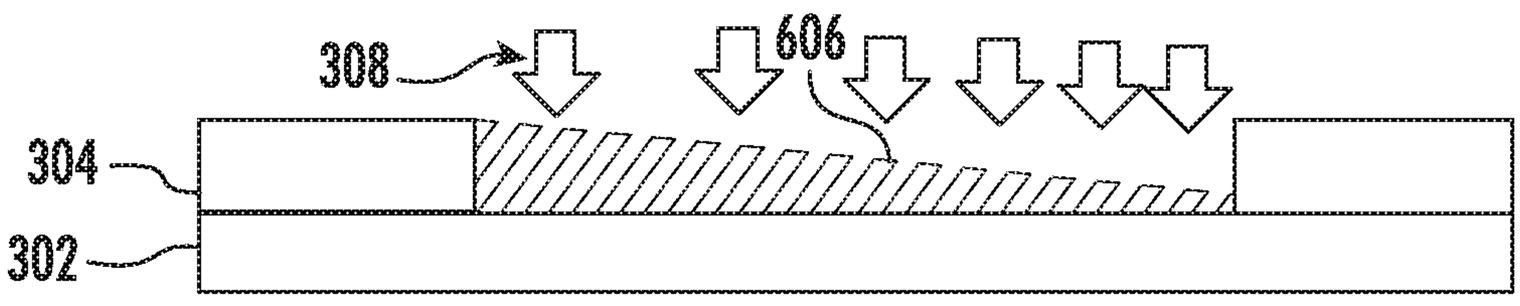

FIG. 6D

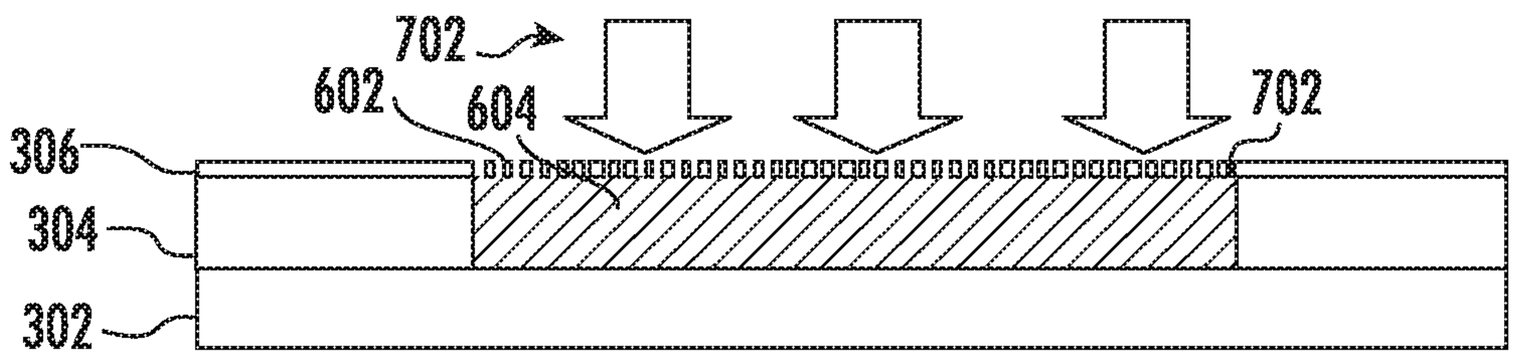

FIG. 7A

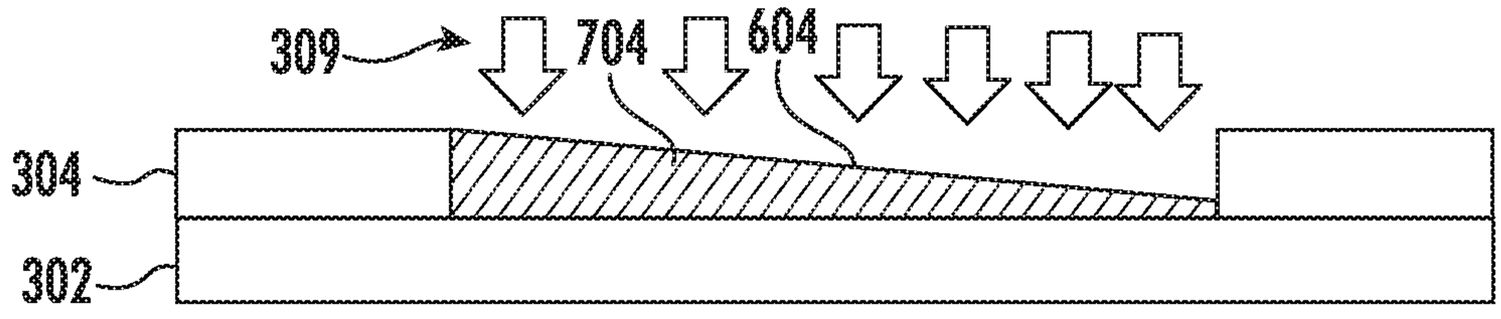

FIG. 7B

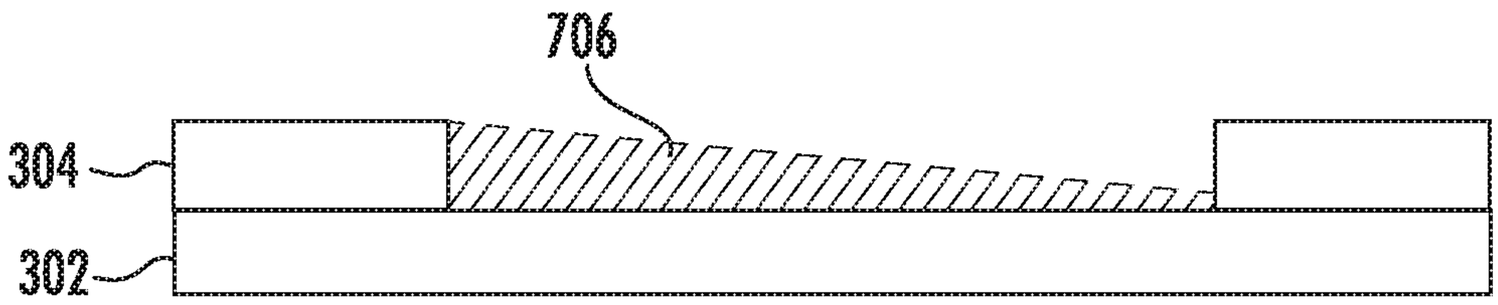

FIG. 7C

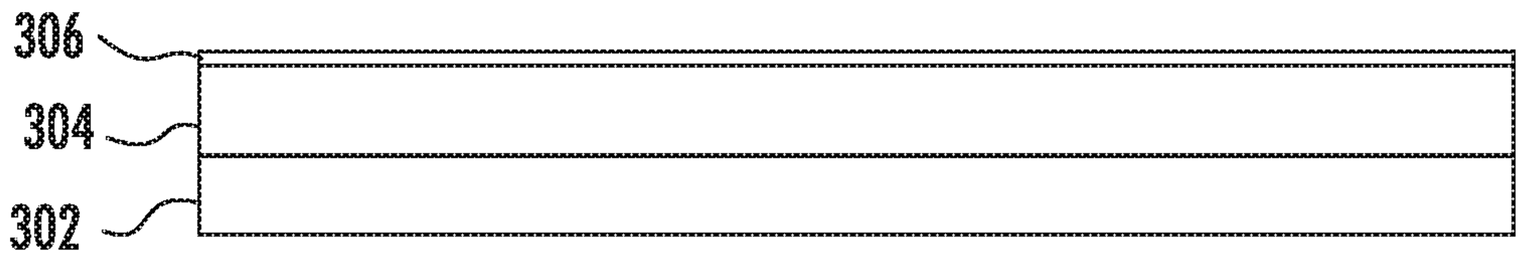

FIG. 8A

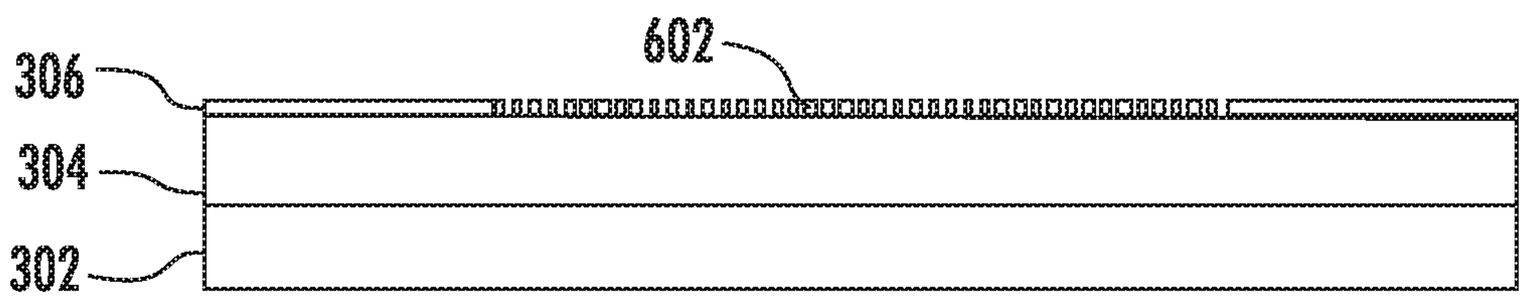

FIG. 8B

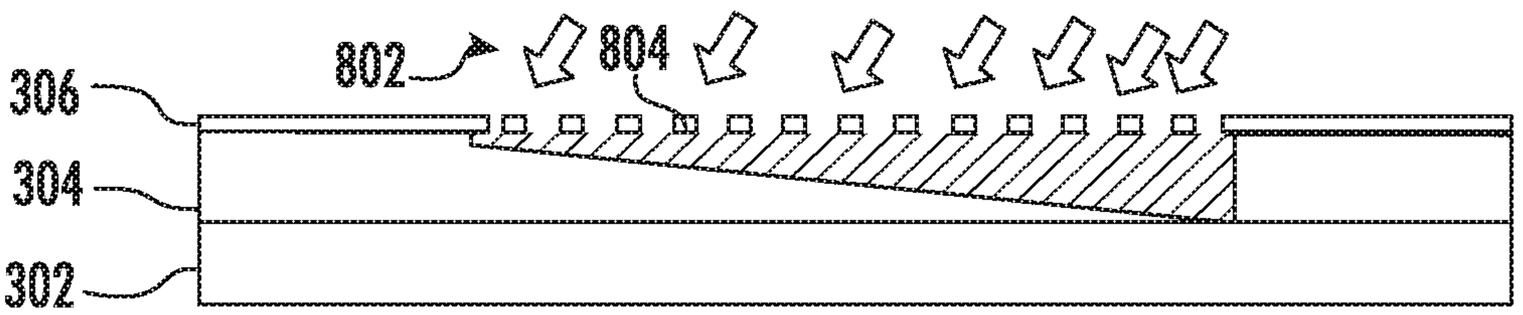

FIG. 8C

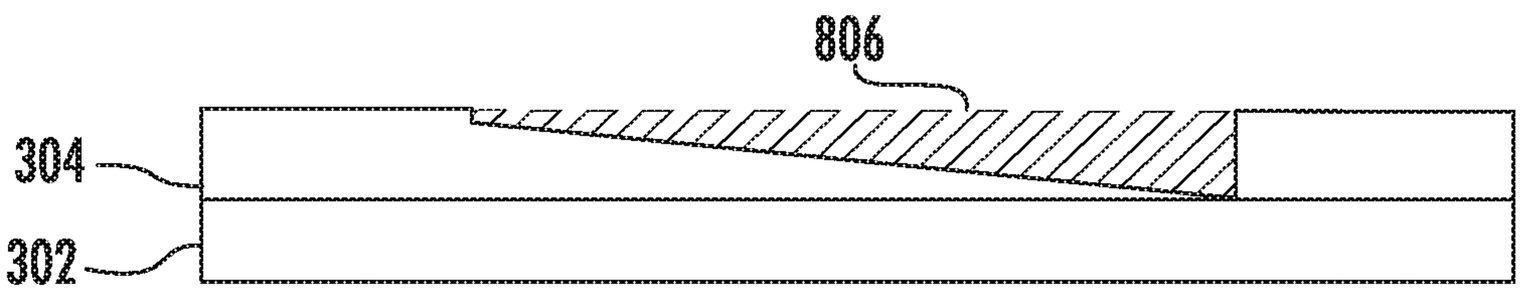

FIG. 8D

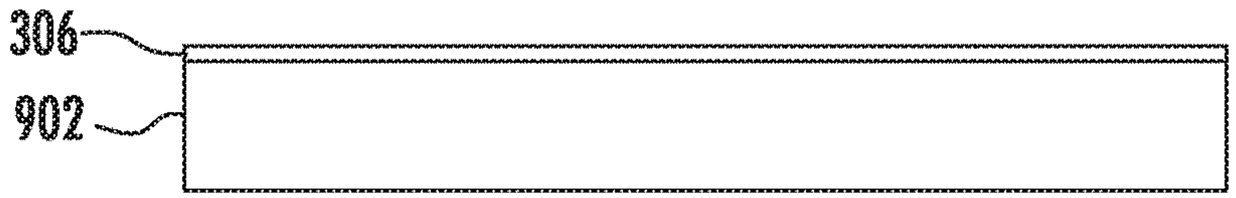

FIG. 9A

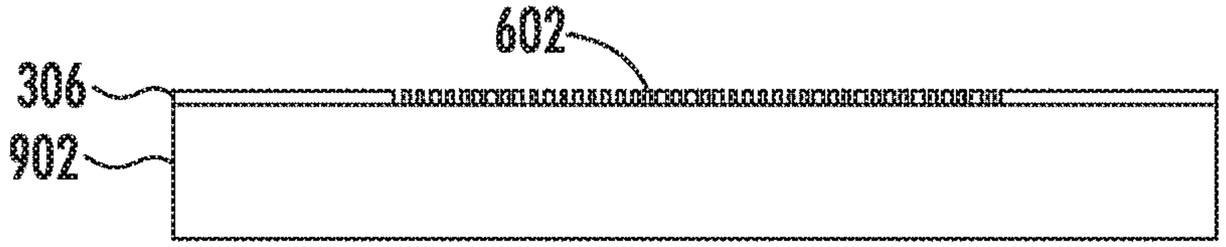

FIG. 9B

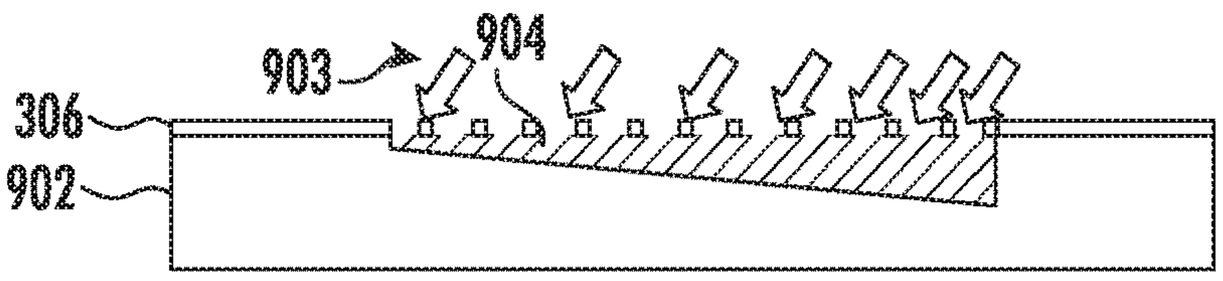

FIG. 9C

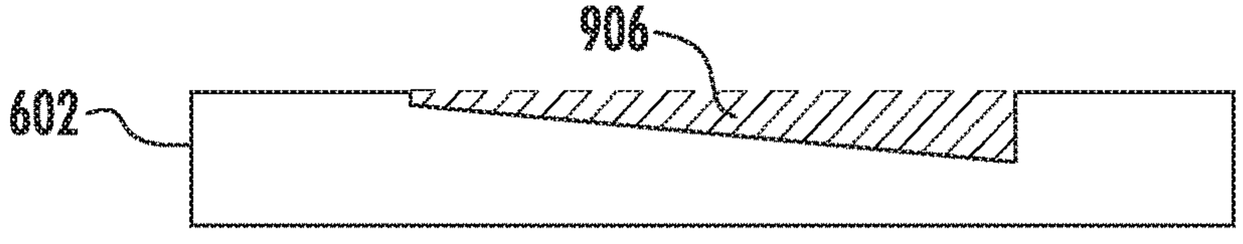

FIG. 9D

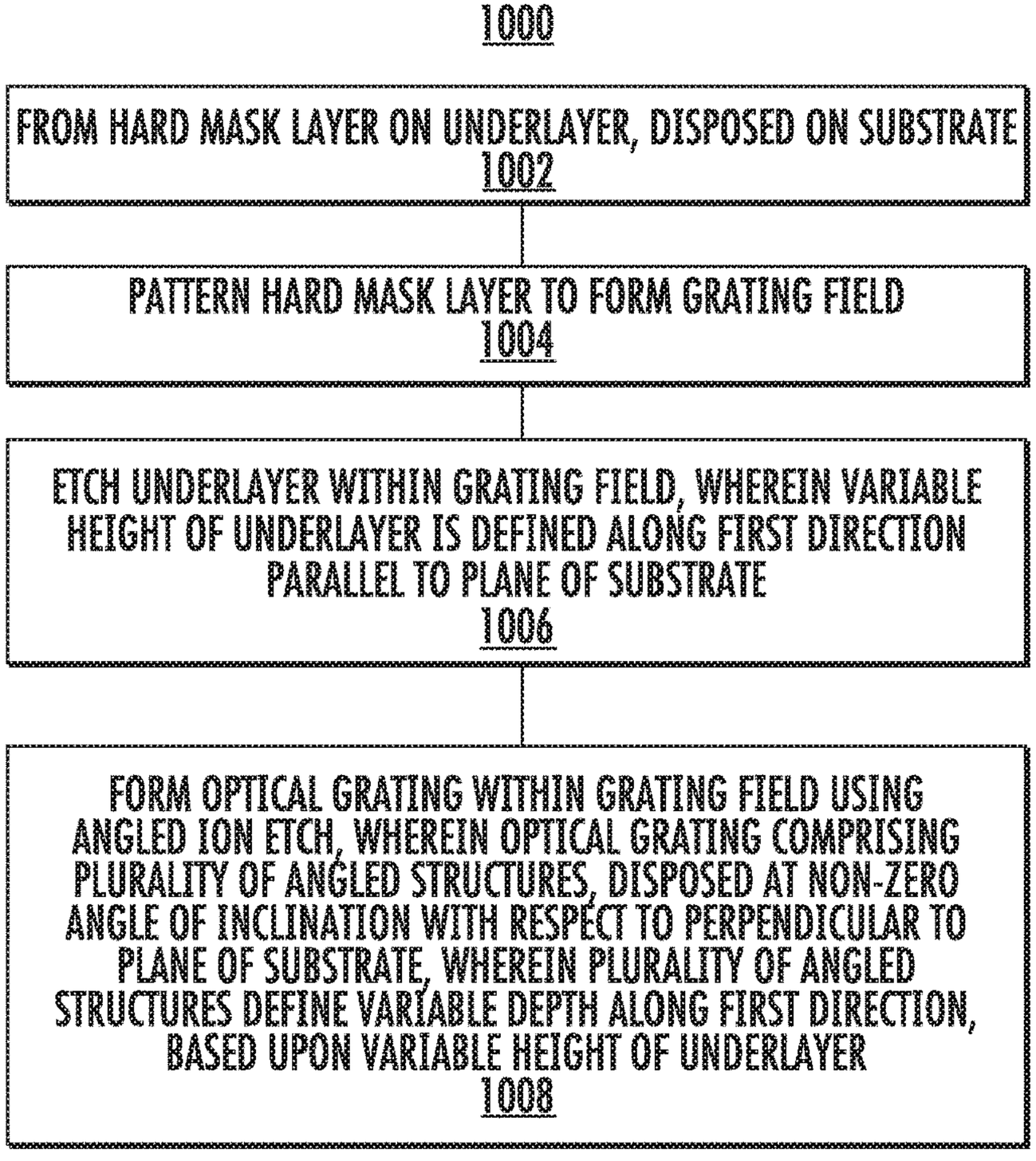

FIG. 10

OPTICAL COMPONENT HAVING DEPTH MODULATED ANGLED GRATINGS AND METHOD OF FORMATION

FIELD

This disclosure relates to optical elements, and more particularly to approaches for forming variable gratings in optical lenses.

BACKGROUND

Optical lenses have long been used to manipulate light for various advantages. Recently, micro-diffraction gratings have been utilized in holographic and augmented/virtual reality (AR & VR) devices.

One particular AR & VR device is a wearable display system such as a headset, which headset is arranged to display an image within a short distance from a human eye. Such wearable headsets are sometimes referred to as head mounted displays, and are provided with a frame displaying an image within a few centimeters of the user's eyes. The image can be a computer generated image on a display, such as a micro display. The optical components are arranged to transport light of the desired image, where the light is generated on the display to the user's eye to make the image visible to the user. The display where the image is generated can form part of a light engine, where the image itself generates collimated light beams, which beams can be guided by the optical component to provide an image visible to the user.

Different kinds of optical components have been used to convey the image from the display to the human eye. To properly function in an augmented reality lens, the height (thickness) of an optical grating is designed to vary as a function of distance of propagation of the light across the lens. In known devices, multiple different regions, such as two or three different regions, are formed on the surface of a lens, where the grating height in one region is different from the grating height in other regions. To provide these different regions, different etches are used to etch the gratings in different regions so the height of the gratings may differ among the different regions. Within a given region, the grating height is uniform, while the grating height changes abruptly at the border between one region and an adjacent region. In addition to increasing processing complexity, the resulting augmented reality lenses provide a blockiness over different regions of a lens, where the height of the gratings increases in a discontinuous fashion between one region and an adjacent region. This blockiness may lead to decreased image clarity and resolution.

Therefore, with respect to at least the above considerations the present disclosure is provided.

BRIEF SUMMARY

In one embodiment, a method of forming an optical grating component is provided. The method may include providing a substrate, the substrate comprising an underlayer and a hard mask layer, disposed on the underlayer. The method may include patterning the hard mask layer to define a grating field and etching the underlayer within the grating field to define a variable height of the underlayer along a first direction, the first direction being parallel to a plane of the substrate. The method may include forming an optical grating within the grating field using an angled ion etch, the optical grating comprising a plurality of angled structures, disposed at a non-zero angle of inclination with respect to a perpendicular to a plane of the substrate, wherein the plurality of angled structures define a variable depth along the first direction, based upon the variable height of the underlayer.

In another embodiment, an optical grating component is provided. The optical grating component may include a substrate base, and a grating layer, disposed on the substrate base. The grating layer may include a grating field, wherein the grating field comprises an array of angled structures. The plurality of angled structures may have a pitch of less than one micrometer, disposed at a non-zero angle of inclination with respect to a perpendicular to a plane of the substrate base, having a variable depth along the first direction, and defining a grating surface, parallel to a plane of the substrate base.

In another embodiment, a method of forming an optical grating component, may include providing a substrate, the substrate comprising a silicon nitride underlayer and a hard mask layer, disposed on the silicon nitride underlayer. The method may include patterning the hard mask layer to define a grating field and etching the silicon nitride underlayer within the grating field to define a variable height of the underlayer along a first direction, the first direction being parallel to a plane of the substrate. The method may include forming an optical grating within the grating field using an angled ion etch. The optical grating may include a plurality of angled structures, disposed at a non-zero angle of inclination with respect to a perpendicular to a plane of the substrate, wherein the plurality of angled structures define a variable depth along the first direction, based upon the variable height of the underlayer.

BRIEF DESCRIPTION OF THE DRAWINGS

The accompanying drawings illustrate exemplary approaches of the disclosure, including the practical application of the principles thereof, as follows:

FIG. **1**A depicts a side cross sectional view of an optical grating component, according to embodiments of the disclosure;

FIG. **1**B depicts a top plan view of the optical grating component of FIG. **1**A;

FIG. **1**C depicts details of the geometry of a side cross sectional view of an optical grating component, according to embodiments of the disclosure

FIG. **2**A shows a processing apparatus, depicted in schematic form, in accordance with embodiments of the present disclosure;

FIG. **2**B shows an extraction plate component and substrate in top plan view in accordance with embodiments of the present disclosure;

FIG. **3**A-FIG. **3**J depict various stages in fabrication of an optical grating component according to some embodiments of the disclosure;

FIG. **4**A-FIG. **4**J depict various stages in fabrication of another optical grating component according to some embodiments of the disclosure;

FIG. **5**A to FIG. **5**C depict various stages in fabrication of another optical grating component according to some embodiments of the disclosure;

FIG. **6**A to FIG. **6**D depict various stages in fabrication of another optical grating component according to further embodiments of the disclosure;

FIG. **7**A to FIG. **7**C depict various stages in fabrication of still another optical grating component according to other embodiments of the disclosure;

FIG. **8**A to FIG. **8**D depict various stages in fabrication of a further optical grating component according to further embodiments of the disclosure;

FIG. **9**A to FIG. **9**D depict various stages in fabrication of yet another optical grating component according to further embodiments of the disclosure; and

FIG. **10** depicts a process flow in accordance with embodiments of the disclosure.

The drawings are not necessarily to scale. The drawings are merely representations, not intended to portray specific parameters of the disclosure. The drawings are intended to depict exemplary embodiments of the disclosure, and therefore are not be considered as limiting in scope. In the drawings, like numbering represents like elements.

DETAILED DESCRIPTION

The present embodiments will now be described more fully hereinafter with reference to the accompanying drawings, where some embodiments are shown. The subject matter of the present disclosure may be embodied in many different forms and are not to be construed as limited to the embodiments set forth herein. These embodiments are provided so this disclosure will be thorough and complete, and will fully convey the scope of the subject matter to those skilled in the art. In the drawings, like numbers refer to like elements throughout.

As used herein, an element or operation recited in the singular and proceeded with the word "a" or "an" are understood as possibly including plural elements or operations, except as otherwise indicated. Furthermore, references to "one embodiment" or "some embodiments" of the present disclosure may be interpreted as including the existence of additional embodiments also incorporating the recited features.

Embodiments herein provide novel optical components and systems and methods for forming an optical component. Various embodiments are related to optical grating components, where the term "optical grating component" refers to a device or part including an optical grating, including AR & VR headsets, eyepieces for AR & VR, or masters for forming optical gratings for eyepieces such as eyeglasses.

FIG. **1**A depicts a side cross sectional view of an optical grating component **100**, according to embodiments of the disclosure. FIG. **1**B depicts a top plan view of the optical grating component **100**. The optical grating component **100** may be used as an optical grating to be placed on an eyeglass or formed integrally in the eyeglass in accordance with various embodiments of the disclosure. The optical grating component **100** includes a substrate **102**, and optical grating **106**, disposed on the substrate **102**. In some embodiments, the substrate **102** is an optically transparent material, such as a known glass. The embodiments are not limited in this context. The optical grating **106** may be disposed in a grating layer **107**, as described further below. In the embodiment of FIG. **1**A and FIG. **1**B, the optical grating component **100** further includes etch stop layer **104**, disposed between the substrate **102** and grating layer **107**. According to some embodiments of the disclosure, the grating layer **107** may be an optically transparent material, such as silicon oxide, silicon nitride, glass, or other material.

According to some embodiments of the disclosure, the optical grating **106** may comprise a grating height H in the range of 100 nm to 1000 nm. As, such the optical grating **106** may be appropriate for use in an eyepiece of a AR & VR apparatus. The embodiments are not limited in this context. In accordance with some embodiments, the etch stop layer **104** may be an optically transparent material and may have a thickness of 10 nm to 100 nm. The embodiments are not limited in this context. Examples of a suitable material for etch stop layer **104** include SiN, SiO_2, TiN, SiC, TiCN, and other materials. In embodiments where the optical grating **106** is to be applied to or incorporated in an eyepiece of an eyeglass, an especially appropriate material is an optically transparent material, including materials where refractive index matches to other layers to reduce of minimize reflection. In embodiments where the optical grating component **100** forms a master for fabricating optical gratings for an eyepiece, the etch stop layer **104** need not be optically transparent. Moreover, the etch stop layer **104** may be omitted in some embodiments.

As further shown in FIG. **1**A, the optical grating **106** may comprise a plurality of angled structures, shown as angled structures **110**, disposed at a non-zero angle of inclination (θ), with respect to a perpendicular **226** to a plane of the substrate **102**, wherein the angled structures **110** are arranged to define a variable height along a first direction. In the example of FIG. **1**A, the angled structures **110** are separated by trenches **114** and define a variable height along the direction parallel to the Y-axis of the Cartesian coordinate system shown, where the first direction (Y-Axis) is parallel to the plane of the substrate **102**, in this case the X-Y plane. A hallmark of the optical grating **106** is a smooth variation in grating height H along the first direction, i.e., along the "Y-direction." In various embodiments, the variation in grating height H or variation in grating depth d may be on the order of 10%, 20%, or 30%, 50%, or 70%, 90% or 100% across the width direction (Y-direction) from left to right in FIG. **1**A. Notably, the width of the optical grating **106** along the Y-direction may be on the order of several millimeters to several centimeters, while the grating height H may be on the order of 1 micrometer or less. Accordingly, the variation in grating height H may range on the order of several hundred nanometers or less. The embodiments are not limited in this context.

One effect of the smooth variation in grating height H is to improve performance of an augmented reality glasses by improving the guiding of light from a light source across the surface of an eyepiece, where the smooth variation in grating height H generates a better distribution of light, and better augmented reality image.

Turning again to FIG. **1**B, there is shown a 2-dimensional representation of the optical grating **106** in top plan view, where the optical grating **106** may have an area on the order of a few square centimeters. As illustrated, the angled structures **110** may extend along a second direction (X-direction), such as perpendicular to the Y-direction. According to some embodiments, the grating height H may be uniform along the X-direction, meaning the grating height H may vary smoothly along the Y-direction, while being constant along the X direction, for a given angled structure **110**. In this respect, the pitch of the angled structures **110** in the optical grating **106** may be on the order of the wavelength of visible light, meaning the optical grating **106** may include tens of thousands of angled structures **110**. Thus, the variation in height along the Y-direction within a single angled structure, meaning an angled structure **110**, may be negligible.

FIG. **1**C depicts details of the geometry of a side cross sectional view of an optical grating component **100**, according to embodiments of the disclosure. In various embodiments angled structures **110** may have a maximum height or maximum depth in some regions of 100 nm to 500 nm. The embodiments are not limited in this context. One example of

a maximum depth is 250 nm. The angled structures may have a width along the Y-axis on the order of 100 nm to 500 nm, with a pitch p on the order of 200 nm to 750 nm. The embodiments are not limited in this context. As shown in FIG. **1**C, the depth D of angled structures **110** may gradually change across the optical grating **106**, over a distance of 25 mm, for example (the dimensions shown in FIG. **1**C are merely exemplary, for the purposes of illustration). The view of FIG. **1**C illustrates **4** different segments of an optical grating **106**, separated from one another by several millimeters or more. Thus, many thousands of individual angled structures may be disposed between the different segments shown in FIG. **1**C. The depth D may decrease in one example from 250 nm to 80 nm across the optical grating **106**. In an example of a linear decrease, assuming a pitch p of 325 nm, and a width of optical grating **106** of 25 mm along the Y-axis. The total change in depth between adjacent structures (assuming zero height at the end of a grating) may be 0.00325 nm or 3.3 picometers, essentially no measurable change. Thus, the angle ϑ formed by changes in height along a grating may be less than 0.01 degrees, meaning locally, across the width of an angled structure, or between adjacent angled structures, the optical grating **106** is effectively flat.

Turning now to FIG. **2**A, there is shown a processing apparatus **200**, depicted in schematic form. The processing apparatus **200** represents a processing apparatus for etching portions of a substrate, or depositing on a substrate, to generate, for example, the optical gratings of the present embodiments. The processing apparatus **200** may be a plasma based processing system having a plasma chamber **202** for generating a plasma **204** therein by any convenient method as known in the art. An extraction plate **206** may be provided as shown, having an extraction aperture **208**, where a non-uniform etching or non-uniform deposition may be performed to reactively etch or deposit a grating layer **107**. A substrate **102**, including, for example, the aforementioned optical grating structure, is disposed in the process chamber **224**. A substrate plane of the substrate **102** is represented by the X-Y plane of the Cartesian coordinate system shown, while a perpendicular to the plane of the substrate **102** lies along the Z-axis (Z-direction).

As further shown in FIG. **2**A, an ion beam **210** may be extracted when a voltage difference is applied using bias supply **220** between the plasma chamber **202** and substrate **102**, or substrate platen **214**, as in known systems. The bias supply **220** may be coupled to the process chamber **224**, for example, where the process chamber **224** and substrate **102** are held at the same potential.

According to various embodiments, the ion beam **210** may be extracted along the perpendicular **226** or may be extracted at a non-zero angle of incidence, shown as θ, with respect to the perpendicular **226**.

The trajectories of ions within the ion beam **210** may be mutually parallel to one another or may lie within a narrow angular range, such as within 10 degrees of one another or less. Thus, the value of θ may represent an average value of incidence angle where the individually trajectories vary up to several degrees from the average value. In various embodiments, the ion beam **210** may be extracted as a continuous beam or as a pulsed ion beam as in known systems. For example, the bias supply **220** may be configured to supply a voltage difference between plasma chamber **202** and process chamber **224**, as a pulsed DC voltage, where the voltage, pulse frequency, and duty cycle of the pulsed voltage may be independently adjusted from one another.

In various embodiments, gas, such as a chemically reactive gas, may be supplied by the source **222** to plasma chamber **202**. The plasma **204** may generate various etching species or depositing species, depending upon the exact composition of species provided to the plasma chamber **202**.

In various embodiments, the ion beam **210** may be provided as a ribbon ion beam having a long axis extending along the X-direction of the Cartesian coordinate system shown in FIG. **2**B. By scanning a substrate platen **214** including substrate **102** with respect to the extraction aperture **208**, and thus with respect to the ion beam **210** along the scan direction **230**, the ion beam **210** may etch the substrate **102** or deposit upon the substrate **102**. The ion beam **210** may be composed of any convenient gas mixture, including inert gas, reactive gas, and may be provided in conjunction with other gaseous species in some embodiments. In particular embodiments, the ion beam **210** and other reactive species may be provided as an etch recipe to the substrate **102** so as to perform a directed reactive ion etching of a layer, such as the grating layer **107**. Such an etch recipe may use known reactive ion etch chemistries for etching materials such as oxide or other material, as known in the art. In other embodiments, the ion beam **210** may be formed of inert species where the ion beam **210** is provided to etch the substrate **102** or more particularly, the grating layer **107**, by physical sputtering, as the substrate **102** is scanned with respect to ion beam **210**.

In this example of FIG. **2**B, the ion beam **210** is provided as a ribbon ion beam extending to a beam width along the X-direction, where the beam width is adequate to expose an entire width of the substrate **102**, even at the widest part along the X-direction. Exemplary beam widths may be in the range of 10 cm, 20 cm, 30 cm, or more while exemplary beam lengths along the Y-direction may be in the range of 2 mm, 3 mm, 5 mm, 10 mm, or 20 mm. The embodiments are not limited in this context.

Notably, the scan direction **230** may represent the scanning of substrate **102** in two opposing (180 degrees) directions along the Y-direction, or just a scan toward the left or a scan toward the right. As shown in FIG. **2**B, the long axis of ion beam **210** extends along the X-direction, perpendicularly to the scan direction **230**. Accordingly, an entirety of the substrate **102** may be exposed to the ion beam **310** when scanning of the substrate **102** takes place along a scan direction **230** to an adequate length from a left side to right side of substrate **102**, as shown in FIG. **2**B.

In various embodiments, as detailed below, the processing apparatus **200** may be used to form a non-uniform grating layer, having a variable grating height, as shown above with respect to FIG. **1**A. This variable grating height may be accomplished by scanning the substrate **102** with respect to the ion beam **210** using a selected area processing (SAP) recipe. In brief, a SAP scan recipe may entail varying at least one process parameter of a set of process parameters during scanning of the substrate **102**. Possible effects of selective area processing include changing the etch rate, deposition rate, implantation dose or degree of amorphization caused by the ion beam **210**, as a function of different locations on the substrate **102**. In particular, "selective area processing" or "SAP" may refer to the operation of scanning a substrate with respect to an ion beam to expose different portions of the substrate to an ion beam in sequential fashion, where at least one parameter, such as the scan rate of the substrate or the duty cycle of a pulsed ion beam, is varied while scanning the substrate.

Such process parameters may include the scan rate of the substrate **102**, the ion energy of the ion beam **210**, duty cycle

of the ion beam **210** when provided as a pulsed ion beam, and rotational position of the substrate **102**. The embodiments are not limited in this context. Because the deposition rate or etch rate caused by the ion beam **210** varies during scanning of the substrate **102**, the thickness or height of the grating layer **107** may vary along the scan direction (Y-axis), generating (after further process operations, detailed below) the resultant structure as shown in FIG. **1**A.

In the figures to follow, various embodiments are illustrated for formation of an optical grating component. A common feature of these embodiments is the use of patterning and non-uniform etching applied to a hard mask layer and an underlayer to define an optical grating. In particular, a grating field is defined in a substrate where the optical grating is to be formed and the underlayer is etched in a manner defining a variable height within the underlayer along a given direction parallel to the substrate plane. The optical grating is formed by using an angled reactive ion etch (or angled RIE (ARIE)) to define a plurality of angled structures. As detailed below, the angled structures, in turn, define a variable depth mimicking the variable height of the underlayer. As shown in the figures to follow, in some examples, the angled structures of the optical grating are formed directly within the underlayer, while in other examples the angled structures are formed in a planarization layer formed over the underlayer.

Turning now to FIGS. **3**A-**3**J there is shown a side cross-sectional view of an optical grating component at different instances during fabrication, according to embodiments of the disclosure. FIG. **3**I shows one variant, optical grating component **300**A, while FIG. **3**J shows another variant, optical grating component **300**B. According to some embodiments, the optical grating components may be used as masters for forming optical gratings to be applied to lenses in AR & VR hardware. In other embodiments, the optical grating components may be directly applied to lenses. Thus, the exact materials to be used for substrate bases as well as optical grating layers may vary depending upon the application of the optical grating component, as will be readily appreciated by those of skill in the art.

At FIG. **3**A, a substrate is provided including a substrate base **302**, underlayer **304**, disposed on the substrate base **302**, and hard mask layer **306**, disposed on the underlayer **304**. In various non-limiting embodiments, the underlayer **304** may be silicon nitride, such as Si_3N_4, while the hard mask layer **306** is silicon dioxide (SiO_2). Notably, the material of hard mask layer **306** may differ from the material of underlayer **304**, facilitating the use of underlayer **304** as an etch stop during patterning of hard mask layer **306**.

Exemplary thickness of underlayer **304** ranges between 100 nm and 1000 nm, depending upon the height of optical gratings to be formed. Exemplary thickness of hard mask layer **306** may be any suitable thickness given that at least a portion of the hard mask layer **306** is to be preserved after etching of the underlayer **304**. Thus, to the extent the underlayer **304** may be subject to a selective etch for etching the underlayer **304** faster than the hard mask layer **306**, the hard mask layer **306** thickness may be less than or equal to the underlayer **304** thickness in some embodiments.

Turning to FIG. **3**B, there is shown a subsequent instance after patterning the hard mask layer **306** to define a grating field **310**. As such, the underlayer **304** is exposed in the grating field **310**. The patterning may be accomplished by known methods, including contact printing, photolithography, or other methods. For example, a photoresist layer may be applied, followed by a contact lithography process to define the grating field **310**, an etch operation to etch the hard mask layer **306**, and a strip operation to remove the photoresist.

The grating field **310** may have the designed shape for an optical grating within the X-Y plane of the Cartesian coordinate system shown. For example, the grating field **310** may have a rectangular shape, a trapezoidal shape, or other shape, such as known shapes used for optical gratings in AR & VR hardware. As such, the dimensions of the grating field **310** along the X-axis or Y-axis may be on the order of millimeters or centimeters.

In FIG. **3**C, there is shown a subsequent instance where the underlayer **304** is subjected to selective area processing using etching ions **308**. The etching ions **308** may be provided as part of a known reactive ion etching (RIE) recipe, appropriate to selectively etch the underlayer **304** with respect to the hard mask layer **306**.

The etching ions **308** may be provided as a ribbon beam as discussed above, where the ribbon beam is elongated along the X-axis, while the substrate base **302** is scanned along the Y-axis, equivalent to the scan direction **230**. According to the present embodiments, the degree of etching of the underlayer **304** caused by etching ions **308** may be varied along the scan direction **230** by varying any combination of the aforementioned parameters. For example, the scan rate of the substrate platen **214** may be varied as the substrate base **102** is scanned under an ion beam containing the etching ions **308**. In some embodiments where the width of an ion beam along the Y-axis is 1 mm to 3 mm, for example, the width of the optical grating **106** along the Y-axis may be 2 cm. Accordingly, a non-uniform etch profile may be introduced into the grating layer **107** by adjusting the scan rate of the narrow (1 mm wide) ion beam during scanning across the 2-cm width of the optical grating **106**.

In another embodiment, the etching ions **308** may be provided in a pulsed ion beam, where the duty cycle of the pulsed ion beam is varied while the substrate base **102** is scanned along the Y-axis. Notably, known pulsed supplies may pulse ion beams at frequencies in the kHz range, meaning the duty cycle can be adjusted over periods of milliseconds or less. Accordingly, for a scan rate of the substrate **102** on the order of millimeters per second, the duty cycle may be adjusted many thousands of times during scanning across a 2-cm optical grating, for example. Thus, the effective etch rate of the etching ions **308** may be finely tailored along the Y-axis.

According to some embodiments of the disclosure, a designed or theoretical grating height profile for a given optical grating may be calculated to optimize performance of the optical grating. This grating height profile may then be used to program and SAP recipe for the processing apparatus **200** to generate the profile in the underlayer **304** using etching ions **308**. For clarity, FIG. **3**C illustrates an example where the underlayer **304** is etched to generate a linearly decreasing thickness from left to right. The etching ions **308** may or may not etch through an entirety of the underlayer **304** toward the deepest part. Thus, the relative intensity of etching increases linearly as the substrate base **302** is scanned, so more etching takes place in regions to the right in the figure. As a result, the upper surface **312** of the underlayer **304** slopes downwardly to the right. Notably, the drawing of FIG. **3**C is not to scale. Thus, as discussed with respect to FIG. **1**C, the upper surface **312** may define an angle with respect to the X-Y plane of less than 0.01 degrees, and in some cases less than 0.001 degrees.

At FIG. **3**D a subsequent operation is shown where an etch stop layer **314** is applied to the underlayer **304**. Appli-

cation may take place using chemical vapor deposition (CVD), atomic layer deposition (ALD), or other technique. In the example where underlayer **304** is silicon nitride, the etch stop layer **314** may be TiN, TaN, or silicon oxide. The embodiments are not limited in this context.

At FIG. **3**E a backfill layer **320** is deposited on the etch stop layer **314**. The backfill layer **320** may be deposited in a blanket deposition, covering the substrate on regions outside of the grating field **310**. The backfill layer **320** may be silicon nitride in some embodiments.

At FIG. **3**F, the backfill layer **320** is planarized. As such, backfill layer **320** may be removed from regions over the hard mask layer **306**, and may define a planar surface, parallel to the X-Y plane. Planarization may take place using selective area processing in some cases, where an ion beam is directed to the substrate while the substrate base is scanned.

At FIG. **3**G another hard mask layer is deposited, shown as hard mask layer **322**. The hard mask layer **322** is then patterned in the grating field **310** to define a grating structure **324**, acting as a grating mask. The hard mask layer **322** may be patterned by known techniques, as discussed above. As such, the grating structure **324** may define the size and shape (within the X-Y plane) of structures in an optical grating to be formed in the backfill layer **320**. In various embodiments where the width of angled structures to be formed is less than 500 nm, deep ultraviolet lithography may be used to define the grating structure **324** in the hardmask layer **322**.

At FIG. **3**H, an angled ion etch is performed to direct angled ions **325** to the grating structure **324**. The angled ions **325** may be provided as an angled ion beam in a RIE etch recipe to selectively etch the backfill layer **320** with respect to the hard mask layer **322**. This selective etching results in the formation of angled structures **326** in the backfill layer **320**. The angled ions **325** may be provided at a designed angle of incidence to generate an appropriate angle of inclination in the angled structures **326**.

In accordance with various embodiments, a directional angled reactive ion etch (including location-specific intensity variation), represented by angled ions **325**, may include other non-ionic species, and may be chosen according to known reactive ion etch compositions for selectively etching the backfill layer **320**. For example, the etch chemistry (such as CH_3F or CHF_3) may be chosen to selectively etch Si_3N_4 with respect to SiO_2 in one example. Returning to FIG. **2**A and FIG. **2**B, the angled ions **325** may be provided as a ribbon ion beam, with the ion trajectories of the ribbon ion beam defining a non-zero angle of inclination θ with respect to the perpendicular **226**, (the Z-axis of FIG. **3**H) as shown. The non-zero angle of incidence may be generated according to known techniques, such as using a beam blocker (not shown) adjacent the extraction aperture **208**, adjusting the extraction aperture width along the Y-axis, as well adjusting plasma conditions within the plasma **204**, including gas pressure, so as to change the curvature of the plasma sheath boundary **228**, proximate the extraction aperture **208**. Notably, the etch stop layer **314** prevents etching of underlayer **304**. For example, using known RIE chemistry, the backfill layer **320** may be etched 10 times to 100 times more rapidly than etch stop layer **314**. Thus, the backfill layer **320** may be etched to different depths at different regions of the grating field **310**, while not removing the etch stop layer **314**. While in some embodiments, the etching of the backfill layer **320** may be uniform, in other embodiments, a selective area processing operation may be applied to perform the operation of FIG. **3**H, where the scan rate or duty cycle is varied while scanning the substrate with respect to angled ions **325**, as generally described above. In this manner, exposure to etching ions in shallower portions of the backfill layer **320** may be reduced, ensuring the etch stop layer **314** is not removed, and accordingly generating the designed depth for the angle structures **326**.

At FIG. **3**I, the hard mask layer is selectively removed, leaving the optical grating component **300**A. As such, the optical grating component **300**A may include many thousands or tens of thousands of angled structures **326**, where the angled structures **326** define a variable depth along a given direction, in this case along a first direction parallel to the Y-axis. Notably, the variable depth, D, of the angled structures **326**, is a direct result of the variable height of the underlayer **304**. Said differently, the depth of the angled structures **326** increases as the height of the underlayer decreases along the Y-axis. A related feature of the optical grating component **300**A is the upper surface **330**, where the upper surface is parallel to the X-Y plane, and thus the grating structures **326** generally form a mirror image in cross-section to the underlayer **304** in the grating field **310**.

At FIG. **3**J, the optional operation is shown where the depositing of a coating, such as an oxide coating, is performed. This operation results in the formation of coated angled structures **328**, forming the optical grating component **300**B. This operation may be useful to enable nanoimprint lithography where the optical grating component **300**B is to be used as a master to form optical gratings. In other applications, this operation may be suitable to chemically stabilize (hermetically seal) material in layer **320**, when the material of layer **320** is a polymer or other soft material.

Turning now to FIGS. **4**A-**4**J there is shown a side cross-sectional view of an optical grating component at different instances during fabrication, according to further embodiments of the disclosure. By way of comparison to the sequence of FIGS. **3**A-**3**J, this approach does not employ the extra planarization operation of FIG. **3**F, while entailing additional lithography operations.

At FIG. **4**A, a substrate is provided including the substrate base **302**, as well as underlayer **304**, disposed above the substrate base **302**, and hard mask layer **306**, disposed on the underlayer **304**. In this embodiment, an etch stop layer **402** is disposed between the underlayer **304** and the substrate base **302**. In various non-limiting embodiments, the material of etch stop layer **402** may differ from the material of underlayer **304** facilitating the use of etch stop layer **402** as an etch stop during patterning of underlayer **304**. The etch stop layer **402** may be, for example, TiN or TaN, and may be deposited by chemical vapor deposition in some embodiments.

Turning to FIG. **4**B, there is shown a subsequent instance after deposition of the hard mask layer **306** and subsequent patterning to define a grating field **310**, generally as described above with respect to FIG. **3**B. As such, the underlayer **304** is exposed in the grating field **310**.

In FIG. **4**C, there is shown a subsequent instance where the underlayer **304** is subjected to selective area processing using etching ions **308**, as described above with respect to FIG. **3**C. The etching ions **308** may or may not etch through an entirety of the underlayer **304** toward the deepest part.

At FIG. **4**D a subsequent operation is shown where another etch stop layer shown as etch stop layer **404**, is applied to the underlayer **304**. Application may take place using chemical vapor deposition (CVD), atomic layer deposition (ALD), or other technique. In the example where underlayer **304** is silicon nitride, the etch stop layer **404** may be TiN, TaN, or silicon oxide. The embodiments are not

limited in this context. As detailed below, the configuration of FIG. **4**D may be employed, wherein the etch stop layer **402** acts as a lower etch stop layer, and the etch stop layer **404** acts as an upper etch stop layer.

At FIG. **4**E an optical proximity layer **406** is deposited on the etch stop layer **404**. The optical proximity layer **406** may be deposited in a blanket deposition, covering the substrate on regions outside of the grating field **310**. The optical proximity layer **406** may be silicon nitride in some embodiments.

At FIG. **4**F, a photoresist layer **408** is deposited on the structure of FIG. **4**E. At FIG. **4**G, in a subsequent operation, a grating pattern **410** is formed in the photoresist layer **408**, in the grating field **310**. The grating pattern **410** may be formed using known lithography techniques, such as deep ultraviolet lithography.

At the stage shown in FIG. **4**H, in a subsequent series of operations, the grating pattern **410** is transferred into the optical proximity layer **406**, forming the grating pattern **412**, and then transferred into the etch stop layer **404**, forming the grating structure **414**. The transfer operations to form the grating structure **414** may involve directional etching, such as known reactive ion etching processes.

At FIG. **4**I, there is shown a subsequent instance, after stripping of the optical proximity layer **406** and photoresist layer **408** has been performed. The stripping of these layers may be performed in a selective matter according to known processes to selectively remove optical proximity layer **406** and photoresist layer **408**, while not etching the grating structure **414**. As such, the grating structure **414** may be similar to the grating structure **324**, described above. A notable difference in grating structure **414** is the grating structure **414** is disposed along the upper surface **312**, and thus on a surface where the height of the underlayer **304**, disposed under the grating structure **414**, varies within the grating field **310**.

At FIG. **4**J, an angled ion etch is performed to direct angled ions **325** to the grating structure **414**. The angled ions **325** may be provided as described above with respect to the various embodiments of FIG. **3**H. This selective etching results in the formation of angled structures **416** in the underlayer **304**. The angled ions **325** may be provided at a designed angle of incidence to generate an appropriate angle of inclination in the angled structures **416**. While not shown, the grating structure **414** may be selectively removed, leaving an optical grating formed from the angled structures **416**.

By way of comparison, when the same selective area processing operation is used in the operations of FIG. **3**C and FIG. **4**C, the angled structures **416** may be considered a mirror image of the angled structures **326**, where the X-Y plane acts as the mirror plane.

In additional embodiments of the disclosure, a structure similar to the structure of FIG. **4**J may be formed according to a shorter sequence of operations. Turning now to FIG. **5**A, there is shown an initial operation, according to a different sequence subsequent to the operations depicted in FIGS. **3**A-**3**D. In this variant, the etch stop layer **314** is patterned to form a grating structure **502**, where the grating structure **502** lies along the upper surface **312**. Because the grating structure **502** may be a different material from the underlayer **304**, the grating structure **502** may be used as a mask to form an optical grating in the underlayer **304**, as noted above. Notably, in patterning to form the grating structure **502**, the hard mask layer **306** may be removed from regions outside of the grating field **310**.

At FIG. **5**B, an angled ion etch is performed using the angled ions **325**, forming the angled structures **504**. At FIG. **5**C, the grating structure **502** may be selectively removed.

Notably, the substrate base **302** may be a different material from underlayer **304**, where etch rate of the substrate base **302** is less than the etch rate of the underlayer **304**, prevents etching of underlayer **304**. Thus, the underlayer **304** may be etched to different depths at different regions of the grating field **310**, while not substantially etching the substrate base **302**. In other embodiments, a selective area processing operation may be applied to perform the operation of FIG. **5**B, where the scan rate or duty cycle is varied while scanning the substrate with respect to angled ions **325**, as generally described above. In this manner, exposure to etching ions in less tall portions (to the right in FIG. **5**C) of the underlayer **304** may be reduced, ensuring the substrate base **302** is not etched to a larger extent than in regions to the left, where the underlayer **304** is taller. The resulting optical grating may be similar to the optical grating formed after the operation of FIG. **4**J, save the absence of underlayer **304**, outside of the grating field **310**.

In additional embodiments of the disclosure, angled structures may be generated before a variable depth or variable height is generated in an optical grating. By way of comparison to approaches where variable height is generated firstly, in these additional embodiments, the bottom of angled structures may be more well defined, while the tops of the angled structures may be not as well shaped.

Turning to FIG. **6**A, there is shown a structure similar to or the same as the structure of FIG. **3**A. In FIG. **6**B, the structure of FIG. **6**A is etched to form a planar grating structure, also defining at the same time the grating field **310**. The planar grating structure, shown as grating structure **602**, may define a similar pattern to the grating structure **324** or the grating structure **414**, or the grating structure **502**, for example. At FIG. **6**C, angled ions **325** are directed to the grating structure **602**, according to the operations described above, forming the angled structures **604**. Notably, the angled structures **604** at this stage define a uniform depth or uniform thickness across the grating field **310**. At FIG. **6**D the etching ions **308** are used to perform a non-uniform etch, as described above. As a result, an optical grating **606** is formed, having a variable height or variable depth along the Y-axis.

In one variant of the embodiment of FIGS. **5**A-**5**D, after the operation of FIG. **5**C, a backfill material **702** may be filled between the angled structures **604**, as shown in FIG. **7**A. A non-uniform etching operation may subsequently be performed with the backfill material **702** in place, forming the optical grating structure **704**, as shown in FIG. **7**B. In some embodiments, the backfill material **702** may be removed, resulting in the optical grating **706**, shown in FIG. **7**C.

In still further embodiments of the disclosure, formation of an optical grating may be accomplished wherein the etching an underlayer and the forming of an optical grating are performed simultaneously in one operation. Turning to FIG. **8**A, and FIG. **8**B, there is shown formation of structures similar to or the same as the structures of FIGS. **6**A and **6**B. In FIG. **8**C, angled ions **802** are directed to the grating structure **602**, where the angled ions **802** are directed at a non-zero angle of incidence with respect to a perpendicular (Z-axis). As such, grating structures **804** are formed, being disposed at a non-zero angle of inclination with respect to the perpendicular. At the same time the angled ions **802** are directed to the grating structure **602** to etch the underlayer **304** in a non-uniform manner, such as in a selective area

processing operation, described above. Thus, after removal of the grating structure **602** in FIG. **8**D, the resulting optical grating, shown as optical grating **806**, exhibits a variable height, similar to the structure of FIG. **6**D or FIG. **7**C.

While the embodiments described above may entail the use of an underlayer such as silicon nitride to form an optical grating, in further embodiments of the disclosure, an optical grating may be formed within a silicon layer, such as monocrystalline silicon or polysilicon. Turning to FIG. **9**A, there is shown a structure where the hard mask layer **306** is disposed on a silicon layer **902**. In some embodiments, the silicon layer **902** may be disposed on a substrate base. At FIG. **9**B, a grating structure **602** is formed on the silicon layer **902**, where the grating structure **602** may be similar to the structures described above. To ensure high selectivity, in the case where hard mask layer **306** is silicon oxide, the etch chemistry for etching the hard mask layer **306**, when disposed over silicon layer **902** may differ from the etch chemistry for etching the hard mask layer **306**, when disposed over silicon nitride.

At FIG. **9**C, angled ions **903** are directed to the grating structure **602**, where the angled ions **903** are directed at a non-zero angle of incidence with respect to a perpendicular (Z-axis). As such, grating structures **904** are formed, being disposed at a non-zero angle of inclination with respect to the perpendicular. At the same time the angled ions **903** are directed to the grating structure **602** to etch the silicon layer **902** in a non-uniform manner, such as in a selective area processing operation, described above. As with the operation of FIG. **9**B, the angled ions **903** may be provided in a reactive ion etching operation, where the chemistry of the reactive ion etching process may differ from a RIE chemistry used to form angled structures in silicon nitride, for example. After removal of the grating structure **602** in FIG. **9**D, the resulting optical grating, shown as optical grating **906**, exhibits a variable height, similar to the structure of FIG. **6**D or FIG. **7**C, while the grating structures **904** may differ in material (silicon) from the previous embodiments.

Turning to FIG. **10**, there is shown a process flow **1000** according to various embodiments of the disclosure. At block **1002**, a hard mask is formed over an underlayer, disposed on a substrate. The materials of the hard mask and underlayer may differ from one another. In one example, the underlayer is a material such as silicon nitride, while the hard mask is a silicon oxide material. The substrate may include a substrate base suitable for use in optical grating applications. For example, when used as an optical grating component to be applied directly to an eyepiece, the substrate may be optically transparent. When used as a master for forming optical gratings to be applied to an eyepiece, the substrate need not be optically transparent.

At block **1004**, the hard mask layer is patterned to form a grating field. The grating field may have the dimensions within a plane of the substrate corresponding to the size and shape of an optical grating to be formed. For example, the optical grating field may have dimensions on the order of several millimeters to a few centimeters in X- and Y directions. In some embodiments, the optical grating field may be a lone window within the hard mask layer, while in other embodiments, the optical grating field may be formed with a pattern of sub-micrometer lines arranged in an array having an overall dimensions of millimeters to centimeters.

At block **1006**, the underlayer is etched within the grating field, to form a variable height in the underlayer along a first direction within the plane of the substrate. For example, the underlayer may be etched so the height of the underlayer decreases monotonically along one direction parallel to the Y-axis, while the height of the underlayer remains uniform along the X-axis. According to different embodiments, the underlayer may be etched wherein the height varies linearly with distance along the Y-axis, or may vary in a non-linear fashion. In some embodiments, the underlayer may be etched in a non-uniform manner in an ion exposure by scanning the optical grating through a ribbon ion beam, where the ion exposure is arranged according to a selective area processing recipe. The selective area processing recipe may control parameters including the substrate scan speed, ion current, duty cycle of a pulsed ion beam, or a combination of parameters, to vary total ion dose delivered to different regions of the underlayer in the grating field as the substrate is scanned through the ribbon ion beam. In various embodiments the height of the underlayer after the ion exposure may vary between a maximum height of 1 micrometer or less and a minimum height of zero micrometers. As such, after the etching of the underlayer, the local angle defined by the surface of the underlayer with respect to horizontal (X-Y plane) may be less than 0.01 degrees and in some cases less than 0.001 degrees.

At block **1008**, an optical grating is formed within the grating field using an angled ion etch. In various embodiments the angled ion etch may be performed using a suitable ion beam, including a ribbon ion beam. After the angled ion etch, the optical grating may include a plurality of angled structures, disposed at a non-zero angle of inclination with respect to a perpendicular (e.g., Z-axis) to the plane of the substrate (X-Y plane). In some embodiments, this range of non-zero angle of inclination may range up to 75 degrees, such as 10 degrees, 20 degrees, 30 degrees, 45 degrees, 60 degrees. The embodiments are not limited in this context. In various embodiments, the angled ion etch may be carried out using a grating pattern defined in a hard mask layer, where the grating pattern extends throughout the grating field. The angled ion etch may be carried out by scanning the grating pattern under (through) a ribbon ion beam. In some embodiments, the angled ion etch may also be controlled according to a selective area processing recipe to vary the ion dose imparted to different portions of the grating pattern, to match the local height of the optical grating layer being etched, such as the underlayer. The grating pattern may be arranged to generate the angled structures as an array of lines, where the lines define a sub-micrometer pitch, and where an individual line may extend for millimeters or centimeters across a length of grating field (e.g. along X-axis).

In various embodiments, the height of a line and the local depth of the optical grating along the X-axis may be uniform, while the plurality of angled structure define a variable height along a first direction (e.g., Y-axis). The variation in height or depth of the angled structures may be smooth, wherein variation in depth between successive angled structures is less than one nanometer, and in some cases less than 1 picometers, while a total variation in depth of the angled structures across the grating field may range up to 1 micrometer. As such, the variable depth of angled structures across the grating field may be based upon the variable height of the underlayer generated by the etch of the underlayer at block **1006**.

In some embodiments, the variable depth of the angled structures may be defined by forming the angled structures directly within the variable-height underlayer. In other embodiments, the variable depth of the angled structures may be defined by forming the angled structures in a planarized backfill layer formed above the variable-height

underlayer, where a variable depth is imparted into the planarized backfill layer by virtue of formation above the variable-height underlayer.

In accordance with different embodiments, the operations and block **1006** and block **1008** may be performed in any suitable order, including block **1006** first, block **1008** first, or block **1006** and block **1008** being performed simultaneously in one operation.

In sum, various embodiments described herein provide approaches for forming optical grating components including eyepieces for AR & VR, or masters for forming optical gratings for AR & VR eyepieces. One advantage of the present embodiments is the ability to perform the operations of non-uniform etching to generate a variable height of an optical grating as well as angled etching to form angled structures of the optical grating within a common tool. A related advantage is the flexibility afforded by various embodiments to perform operations of angled etching and non-uniform etching in any suitable sequence.

The present disclosure is not to be limited in scope by the specific embodiments described herein. Indeed, other various embodiments of and modifications to the present disclosure, in addition to those described herein, will be apparent to those of ordinary skill in the art from the foregoing description and accompanying drawings. Thus, such other embodiments and modifications are intended to fall within the scope of the present disclosure. Furthermore, the present disclosure has been described herein in the context of a particular implementation in a particular environment for a particular purpose. Those of ordinary skill in the art will recognize the usefulness is not limited thereto and the present disclosure may be beneficially implemented in any number of environments for any number of purposes. Thus, the claims set forth below are to be construed in view of the full breadth and spirit of the present disclosure as described herein.

What is claimed is:

1. A method of forming an optical grating component, comprising:

providing an underlayer atop a substrate;

providing a hard mask layer atop the underlayer;

patterning an opening in the hard mask layer;

etching the underlayer through the opening of the hard mask layer to define a variable height of the underlayer along a first direction, the first direction being parallel to a plane defined by a top surface of the substrate;

forming an etch stop layer over the underlayer after the underlayer is etched;

forming a backfill material over the hard mask layer and over the etch stop layer;

planarizing the backfill material selective to the hard mask layer, wherein a top surface of the backfill material over the etch stop layer is co-planar with the hard mask layer; and

forming a plurality of angled structures in the backfill material using an angled ion etch delivered at a non-zero angle of inclination with respect to a perpendicular to the plane defined by the top surface of the substrate, wherein the plurality of angled structures define a variable depth along the first direction, based upon the variable height of the underlayer.

2. The method of claim **1**, further comprising:

forming a second hard mask layer atop the backfill material and the hard mask layer;

patterning a set of openings in the second hard mask layer to define a plurality of grating structures; and

directing an angled ion beam to the backfill material in the presence of the plurality of grating structures to form the plurality of angled structures.

3. The method of claim **2**, further comprising removing the second hard mask layer after formation of the plurality of angled structures.

4. The method of claim **1**, wherein forming the backfill layer comprises depositing a silicon nitride over the hard mask layer and over the etch stop layer.

5. The method of claim **1**, further comprising depositing an oxide coating on the plurality of angled structures after the angled ion etch.

6. The method of claim **1**, wherein forming the plurality of angled structures comprises forming a plurality of trenches in the backfill layer selective to the etch stop layer.

7. The method of claim **1**, wherein etching the underlayer through the opening of the hard mask layer comprises recessing the underlayer to define a top surface of the underlayer having a constant slope relative to the plane of the substrate.

8. A method of forming an optical grating component, comprising:

providing an underlayer atop a substrate;

providing a hard mask layer atop the underlayer;

patterning an opening in the hard mask layer;

etching the underlayer through the opening of the hard mask layer to define a variable height of the underlayer along a first direction, the first direction being parallel to a plane defined by a top surface of the substrate;

forming a backfill material over the hard mask layer and over an etch stop layer;

planarizing the backfill material selective to the hard mask layer, wherein a top surface of the backfill material over the etch stop layer is co-planar with the hard mask layer; and

forming a plurality of angled structures in the backfill material using an angled ion etch delivered to the backfill material at a non-zero angle of inclination with respect to a perpendicular to the plane defined by the top surface of the substrate, wherein the plurality of angled structures define a variable depth along the first direction, based upon the variable height of the underlayer.

9. The method of claim **8**, further comprising forming an etch stop layer over the underlayer after the underlayer is etched.

10. The method of claim **9**, wherein forming the backfill layer comprises depositing a silicon nitride over the hard mask layer and over the etch stop layer.

11. The method of claim **9**, wherein forming the plurality of angled structures comprises forming a plurality of trenches in the backfill layer selective to the etch stop layer.

12. The method of claim **9**, further comprising:

forming a second hard mask layer atop the backfill material and the hard mask layer; and

patterning a set of openings in the second hard mask layer to define a plurality of grating structures, wherein the angled ion etch comprises directing an angled ion beam to the backfill material in the presence of the plurality of grating structures.

13. The method of claim **12**, further comprising removing the second hard mask layer after formation of the plurality of angled structures.

14. The method of claim **13**, further comprising depositing an oxide coating on the plurality of angled structures after the second hard mask layer is removed.

15. The method of claim 8, wherein etching the underlayer through the opening of the hard mask layer comprises recessing the underlayer to define a top surface of the underlaying having a constant slope relative to the plane of the substrate.

* * * * *