US010954594B2

(12) **United States Patent**
Babayan et al.

(10) **Patent No.: US 10,954,594 B2**
(45) **Date of Patent: Mar. 23, 2021**

(54) **HIGH TEMPERATURE VAPOR DELIVERY SYSTEM AND METHOD**

(71) Applicant: **Applied Materials, Inc.**, Santa Clara, CA (US)

(72) Inventors: **Viachslav Babayan**, Sunnyvale, CA (US); **Qiwei Liang**, Fremont, CA (US); **Tobin Kaufman-Osborn**, Sunnyvale, CA (US); **Ludovic Godet**, Sunnyvale, CA (US); **Srinivas D. Nemani**, Sunnyvale, CA (US)

(73) Assignee: **Applied Materials, Inc.**, Santa Clara, CA (US)

(*) Notice: Subject to any disclaimer, the term of this patent is extended or adjusted under 35 U.S.C. 154(b) by 1297 days.

(21) Appl. No.: **14/957,440**

(22) Filed: **Dec. 2, 2015**

(65) **Prior Publication Data**

US 2017/0088949 A1 Mar. 30, 2017

Related U.S. Application Data

(60) Provisional application No. 62/235,130, filed on Sep. 30, 2015.

(51) **Int. Cl.**
C23C 16/448 (2006.01)
C23C 16/44 (2006.01)
(Continued)

(52) **U.S. Cl.**
CPC ***C23C 16/4485*** (2013.01); ***C23C 16/4401*** (2013.01); ***C23C 16/4411*** (2013.01);
(Continued)

(58) **Field of Classification Search**
CPC C23C 14/24; C23C 16/4485; C23C 16/45517; C23C 16/4401; C23C 16/46;
(Continued)

(56) **References Cited**

U.S. PATENT DOCUMENTS

3,260,235 A * 7/1966 Witz C23C 14/22 118/69
4,563,262 A * 1/1986 Sablev C23C 14/325 204/192.38

(Continued)

FOREIGN PATENT DOCUMENTS

JP H07273052 A 10/1995
JP 2003027218 A 1/2003

(Continued)

OTHER PUBLICATIONS

Taiwanese Office Action (with attached English translation of the Search Report) for Application No. 105127638; dated May 15, 2019; 6 total pages.

(Continued)

Primary Examiner — Aiden Lee
(74) *Attorney, Agent, or Firm* — Patterson + Sheridan, LLP

(57) **ABSTRACT**

The present disclosure generally relate to a semiconductor processing apparatus. In one embodiment, a processing chamber is disclosed herein. The processing chamber includes a chamber body and lid defining an interior volume, the lid configured to support a housing having a cap, a substrate support disposed in the interior volume, a vaporizer coupled to the cap and having an outlet open to the interior volume of the processing chamber, wherein the vaporizer is configured to deliver a precursor gas to a processing region defined between the vaporizer and the substrate support, and a heater disposed adjacent to the vaporizer, wherein the heater is configured to heat the vaporizer.

19 Claims, 5 Drawing Sheets

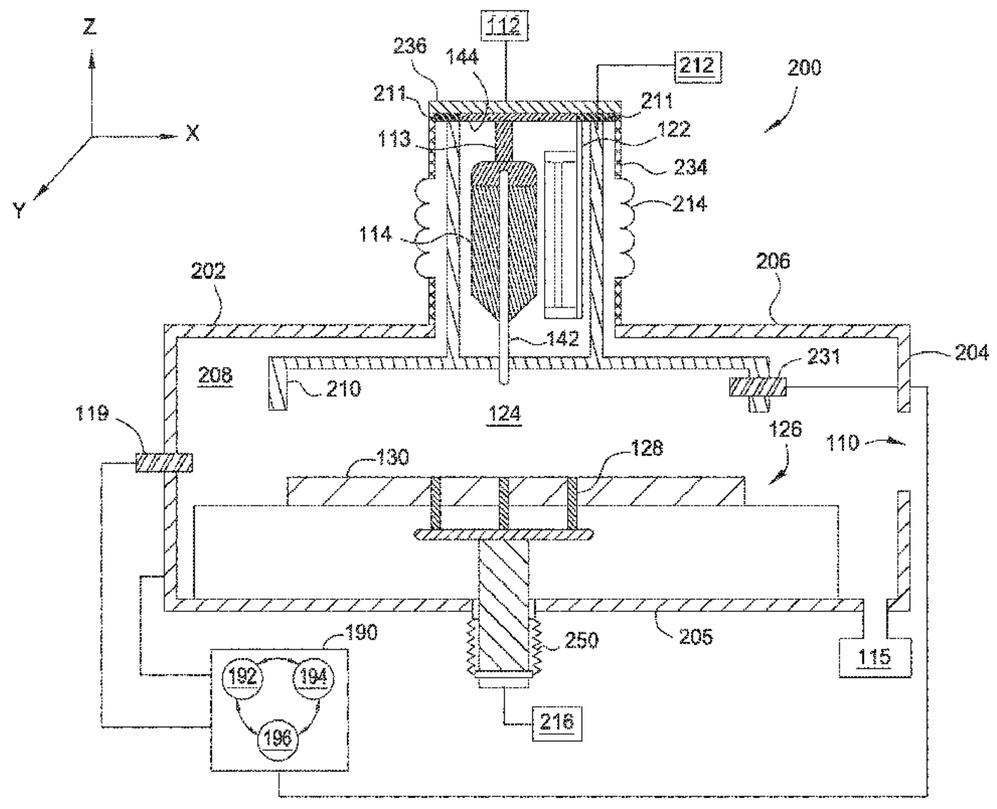

(51) **Int. Cl.**

C23C 16/458	(2006.01)
C23C 16/46	(2006.01)
H01L 21/687	(2006.01)
H01L 21/67	(2006.01)
H01L 21/677	(2006.01)
C23C 16/455	(2006.01)

(52) **U.S. Cl.**
CPC ***C23C 16/4586*** (2013.01); ***C23C 16/45517*** (2013.01); ***C23C 16/46*** (2013.01); ***H01L 21/6719*** (2013.01); ***H01L 21/67109*** (2013.01); ***H01L 21/67115*** (2013.01); ***H01L 21/67742*** (2013.01); ***H01L 21/67754*** (2013.01); ***H01L 21/68707*** (2013.01); ***H01L 21/68764*** (2013.01); ***H01L 21/68771*** (2013.01)

(58) **Field of Classification Search**
CPC C23C 16/4586; C23C 16/4411; C23C 16/448; H01L 21/6719; H01L 21/68764; H01L 21/67109; H01L 21/67742; H01L 21/67754; H01L 21/67115; H01L 21/68707; H01L 21/68771
USPC 118/726
See application file for complete search history.

(56) **References Cited**

U.S. PATENT DOCUMENTS

4,791,273	A	12/1988	Satoh et al.	
5,009,738	A *	4/1991	Gruenwald	H01J 37/3244 156/345.47
5,674,574	A	10/1997	Atwell et al.	
5,968,594	A *	10/1999	Hu	C23C 16/448 427/248.1
6,258,170	B1	7/2001	Somekh et al.	
6,280,793	B1	8/2001	Atwell et al.	
6,512,885	B1 *	1/2003	Yamamuka	C23C 16/4481 118/724
6,593,580	B2	7/2003	Miyabayashi	
7,009,281	B2 *	3/2006	Bailey, III	H01J 37/32522 156/345.24
7,112,804	B2	9/2006	Horsky et al.	
7,326,937	B2	2/2008	Mehta et al.	
7,695,233	B2 *	4/2010	Toshima	H01L 21/67201 156/345.23
7,699,932	B2 *	4/2010	Miller	C23C 16/45544 118/715
2002/0185069	A1 *	12/2002	Hoffmann	C23C 14/12 118/726
2004/0007180	A1 *	1/2004	Yamasaki	C23C 16/16 118/715
2007/0254100	A1 *	11/2007	Nijhawan	C23C 16/303 427/248.1
2008/0241381	A1	10/2008	Suzuki	
2010/0255181	A1 *	10/2010	Hopper	C23C 16/4485 427/8

FOREIGN PATENT DOCUMENTS

JP	2007520059	A	7/2007
JP	2007242648	A	9/2007
JP	2013064200	A	4/2013
TW	500823	B	9/2002
TW	201202470	A	1/2012
TW	201511136	A	3/2015

OTHER PUBLICATIONS

Office Action for Japanese Patent Application No. 2016-187671 dated Sep. 1, 2020.
Office Action for Taiwan Patent Application No. 109113153 dated Dec. 11, 2020.

* cited by examiner

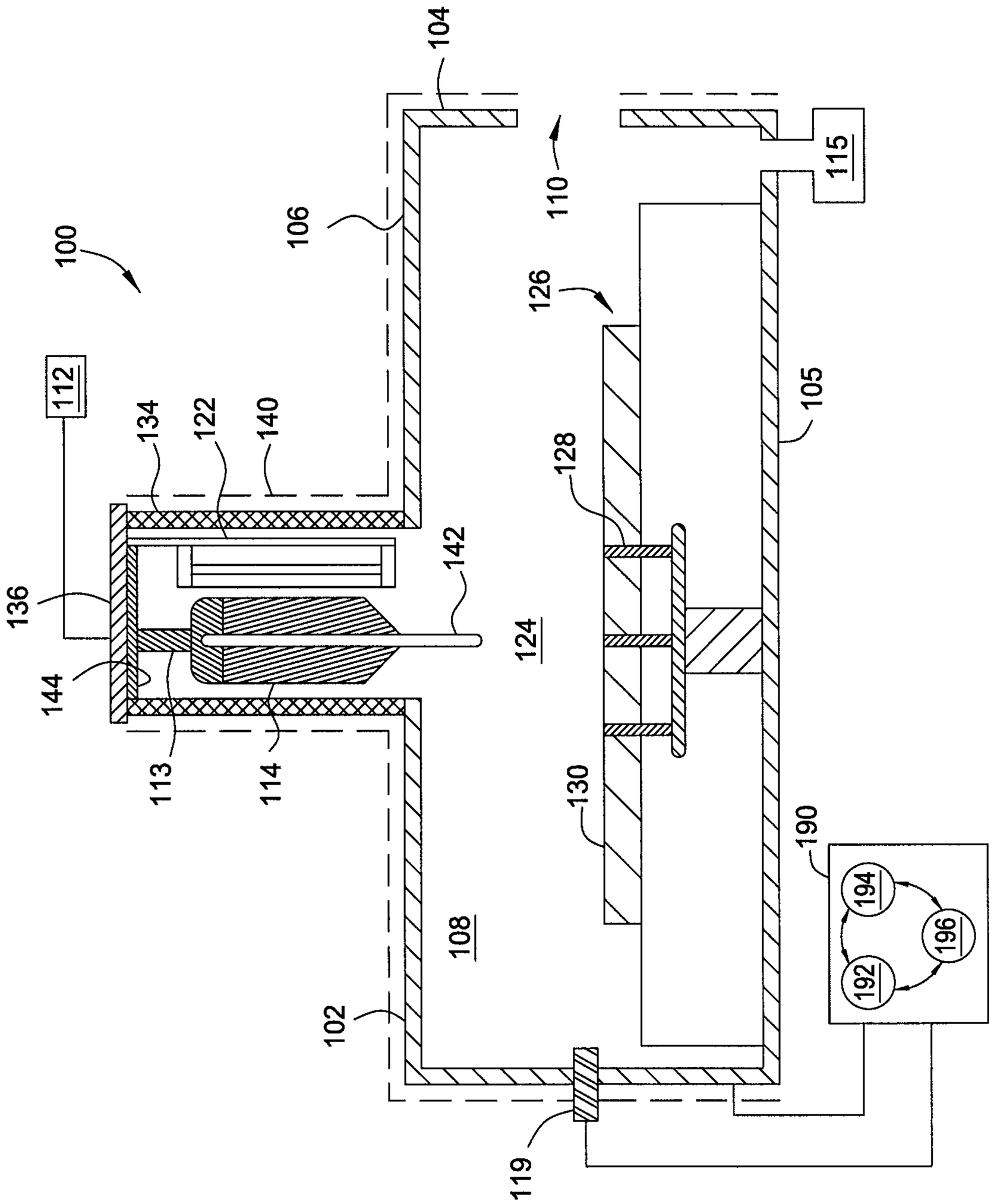
104
100
106
112
134
122
140
136
142
144
113
114
102
108
119
126
128
124
130
110
115
105
190
194
196
192

FIG. 1

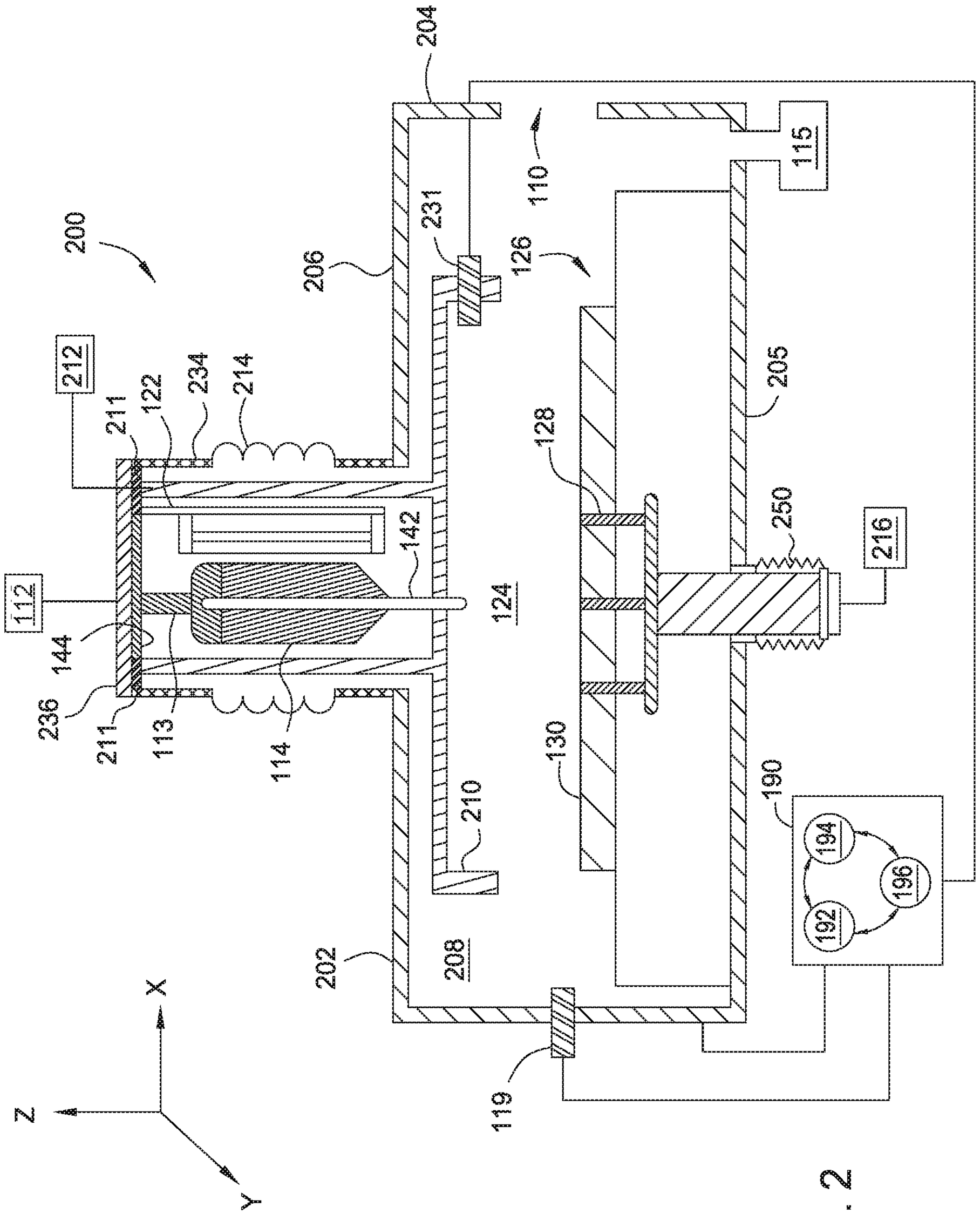
200
204
110
231
206
126
115
212
211
122
234
214
205
128
250
216
142
112
124
144
236
211
113
114
130
210
190
194
196
192
208
202
119
Z
X
Y

FIG. 2

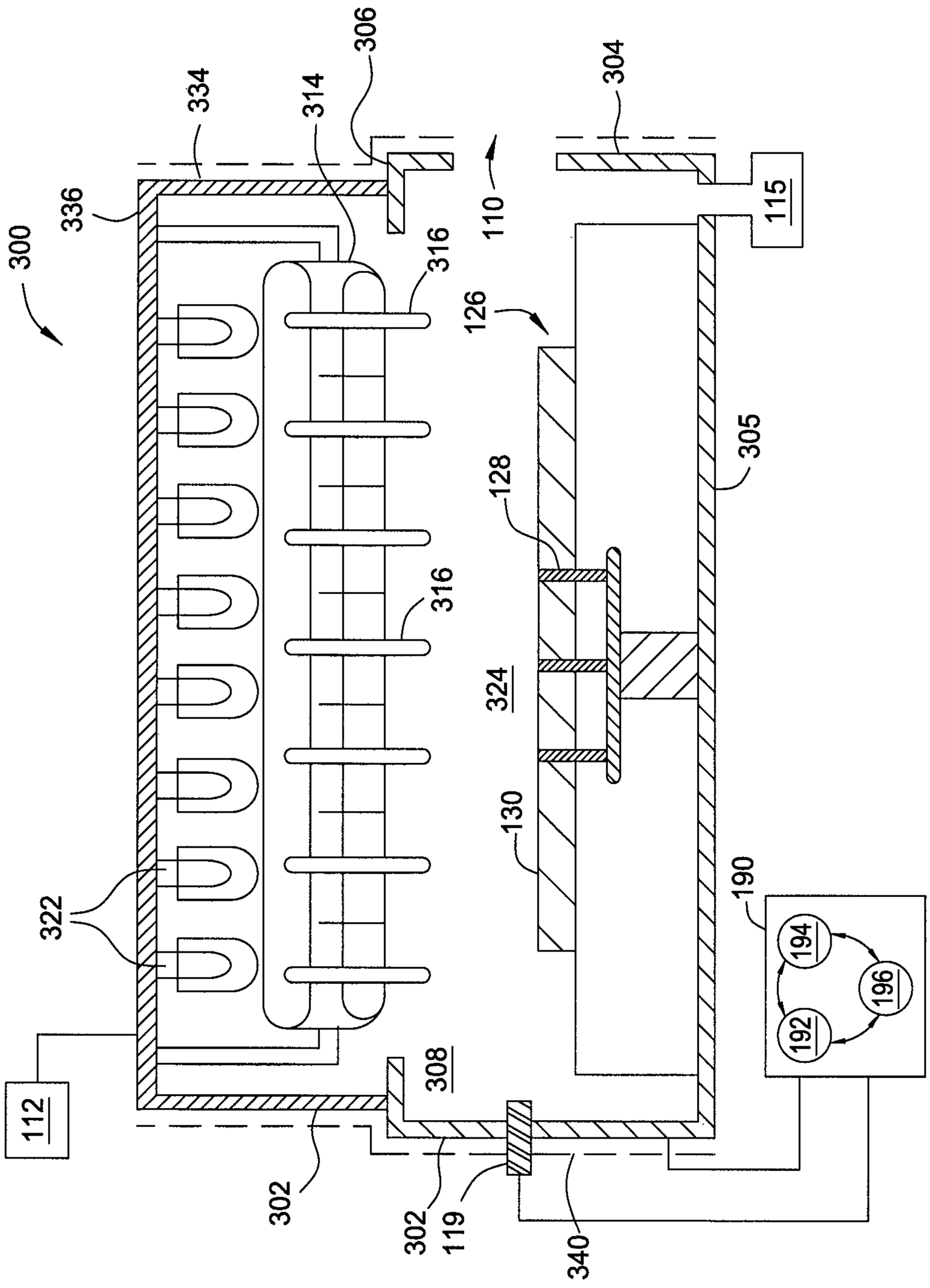
300
336
334
314
306
316
322
112
302
308
110
304
115
126
128
305
324
130
302
119
340
190
194
196
192

FIG. 3

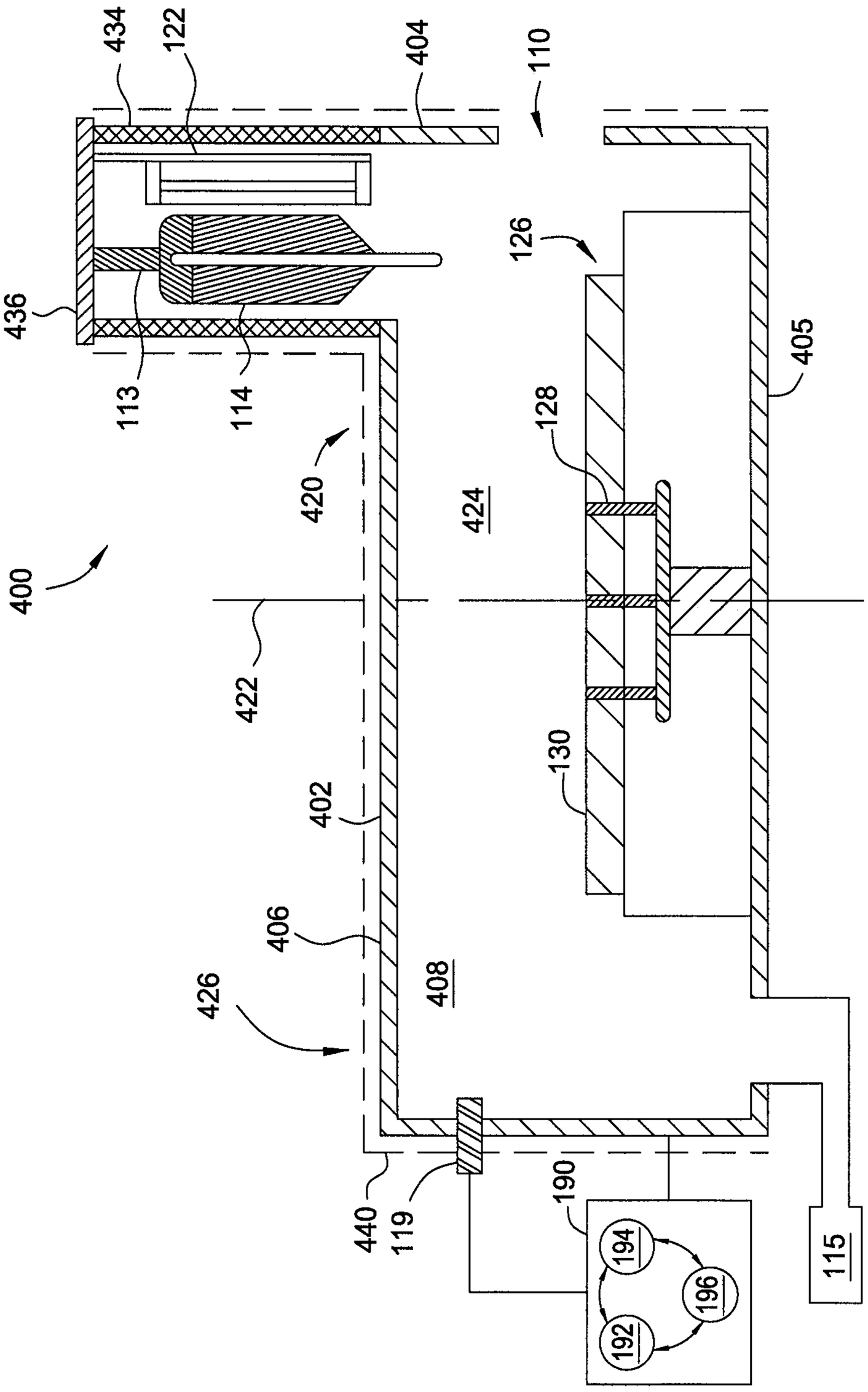
434
122
404
110
436
113
114
126
405
128
420
424
400
422
130
402
406
426
408
440
119
190
194
196
192
115

FIG. 4

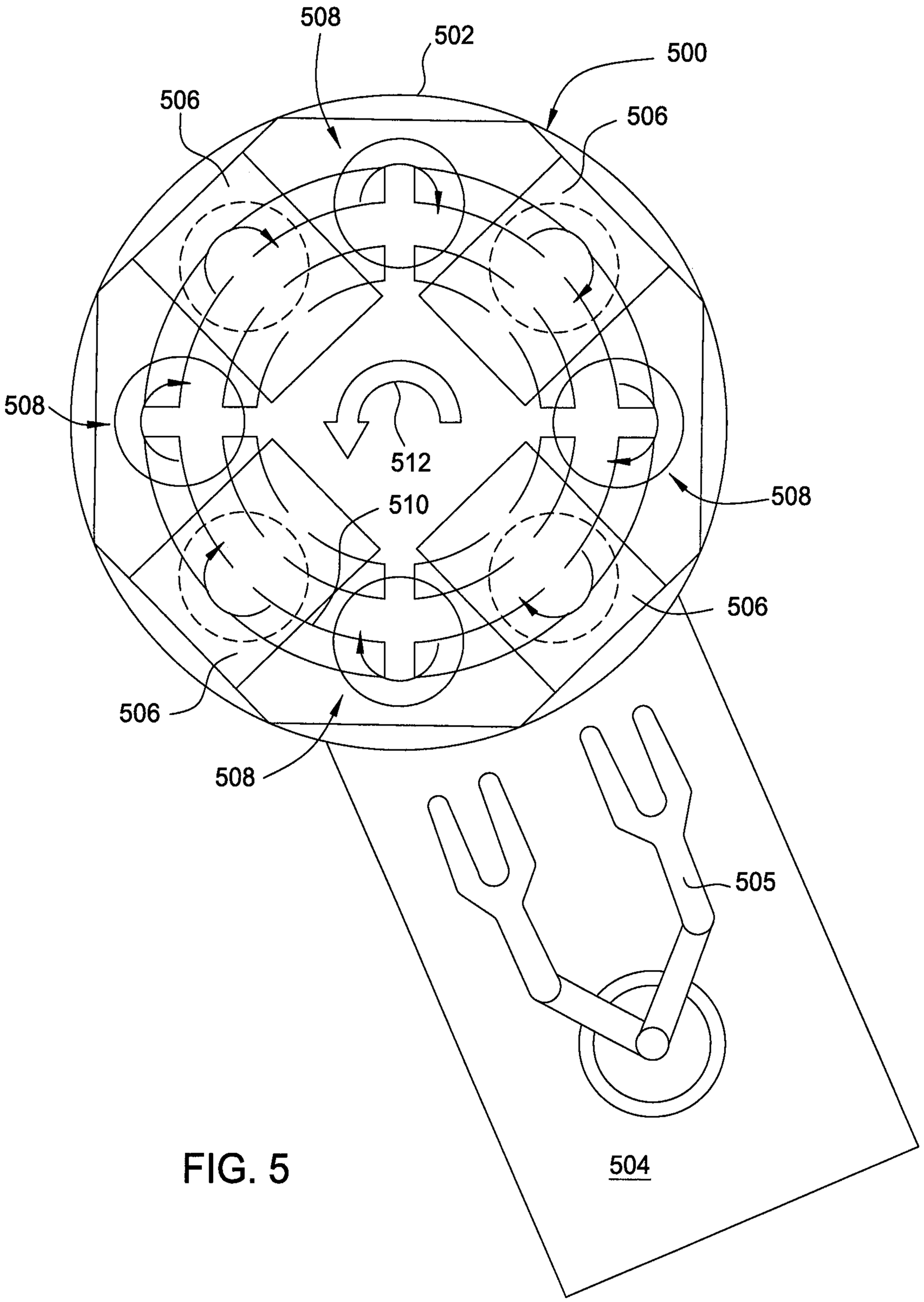

FIG. 5

HIGH TEMPERATURE VAPOR DELIVERY SYSTEM AND METHOD

CROSS-REFERENCE TO RELATED APPLICATIONS

This application claims priority from U.S. Provisional Application Ser. No. 62/235,130, filed Sep. 30, 2015, which is hereby incorporated by reference in its entirety.

BACKGROUND

Field

Embodiments of the present disclosure generally relate to a semiconductor processing apparatus, and more particularly to an apparatus for delivering precursors with high boiling temperatures.

Description of the Related Art

Reliably producing sub-half micron and smaller features is one of the key technology challenges for next generation very large scale integration (VLSI) and ultra large scale integration (ULSI) of semiconductor devices. However, as the limits of circuit technology are pushed, the shrinking dimensions of VLSI and ULSI technology have placed additional demands on processing capabilities. Reliable formation of gate structures on the substrate is important to VLSI and ULSI success and to the continued effort to increase circuit density.

As circuit densities increase for next generation devices, the widths of interconnects, such as vias, trenches, contacts, gate structures and other features, as well as the dielectric materials therebetween, decrease to 45 nm and 32 nm dimensions and beyond. In order to enable the fabrication of next generation devices and structures, three dimensional (3D) stacking of features in semiconductor chips is often utilized. In particular, fin field effect transistors (FinFETs) are often utilized to form three dimensional (3D) structures in semiconductor chips. By arranging transistors in three dimensions instead of conventional two dimensions, multiple transistors may be placed in the integrated circuits (ICs) very close to each other. As circuit densities and stacking increase, the ability to selectively deposit subsequent materials on previously deposited materials gains importance.

Thus, there is a need for improved apparatus for selective deposition suitable for three dimensional (3D) stacking of semiconductor chips or other semiconductor devices.

SUMMARY

In one embodiment, a processing chamber is disclosed herein. The processing chamber includes a chamber body and lid defining an interior volume, the lid configured to support a housing having a cap, a substrate support disposed in the interior volume, a vaporizer coupled to the cap of the processing chamber within the interior volume of the processing chamber, wherein the vaporizer is configured to deliver a precursor gas to a processing region defined between the vaporizer and the substrate support, and a heater disposed adjacent to the vaporizer, wherein the heater is configured to heat the vaporizer.

In another embodiment, a processing chamber is disclosed herein. The processing chamber includes a chamber body and lid defining an interior volume, wherein the lid is configured to support a housing having a cap, and wherein the cap includes a water cooled base plate to control a temperature of the cap, a substrate support assembly disposed in the interior volume, a vaporizer coupled to the cap of the processing chamber within the interior volume by a thermal isolator, wherein the vaporizer is configured to deliver a precursor to a processing region defined between the vaporizer and the substrate support assembly, and a heater disposed adjacent to the vaporizer, wherein the heater is configured to heat the vaporizer to a temperature between 100° C. and 600° C.

In one embodiment, a substrate processing platform for processing a plurality of substrates is disclosed herein. The substrate processing platform includes a rotary track mechanism, a plurality of processing chambers, and a transfer robot. The plurality of processing chambers is disposed in an array about the rotary track mechanism. One processing chamber includes a chamber body and lid defining an interior volume, the lid configured to support a housing having a cap, a substrate support disposed in the interior volume, a vaporizer coupled to the cap of the processing chamber within the interior volume of the processing chamber, wherein the vaporizer is configured to deliver a precursor gas to a processing region defined between the vaporizer and the substrate support, and a heater disposed adjacent to the vaporizer, wherein the heater is configured to heat the vaporizer. The transfer robot is configured to carry a plurality of substrates and concurrently transfer the substrates into and out of the substrate processing platform.

BRIEF DESCRIPTION OF THE DRAWINGS

So that the manner in which the above recited features of the present disclosure can be understood in detail, a more particular description of the disclosure, briefly summarized above, may be had by reference to embodiments, some of which are illustrated in the appended drawings. It is to be noted, however, that the appended drawings illustrate only typical embodiments of this disclosure and are therefore not to be considered limiting of its scope, for the disclosure may admit to other equally effective embodiments.

FIG. **1** illustrates a processing chamber having heated sidewalls and a vaporizer mounted above a substrate, according to one embodiment.

FIG. **2** illustrates a processing chamber having a vaporizer and an internal heat shield, according to one embodiment.

FIG. **3** illustrates a processing chamber having heated side walls and a multi-nozzle vaporizer, according to one embodiment.

FIG. **4** illustrates a processing chamber with a cross-flow configuration, according to one embodiment.

FIG. **5** illustrates a multi-chamber processing system, according to one embodiment.

To facilitate understanding, identical reference numerals have been used, where possible, to designate identical elements that are common to the figures. It is contemplated that elements and features of one embodiment may be beneficially incorporated in other embodiments without further recitation.

It is to be noted, however, that the appended drawings illustrate only exemplary embodiments of this disclosure and are therefore not to be considered limiting of its scope, for the disclosure may admit to other equally effective embodiments.

DETAILED DESCRIPTION

FIG. **1** illustrates a processing chamber **100**, according to one embodiment. For example, the processing chamber **100** may be a chemical vapor deposition (CVD) chamber, or any processing chamber that delivers precursors with high boil-

ing points and low vapor pressures. The processing chamber **100** includes a chamber body **102** having sidewalls **104**, a bottom **105**, and a lid **106**. The sidewalls **104** and lid **106** define an interior volume **108**. In one embodiment, the sidewalls **104** and lid **106** are heated. For example, the sidewalls **104** and lid **106** may be heated to a temperature of 250° Celsius (C), while a substrate support assembly **126** may be heated to 220° C. In one embodiment, the substrate support assembly **126** may be a heated substrate support assembly. For example, the substrate support assembly **126** may be heated to a temperature of about 190° C., or about 20°-30° C. lower than the sidewalls **104**. An external heat shield **140** may be positioned around the chamber body **102** to protect users from the heated sidewalls **104** and lid **106**. A substrate transfer port **110** is formed in the sidewall **104** for transferring substrates into and out of the interior volume **108**.

A precursor delivery system **112** is coupled to the processing chamber **100** to supply a precursor material into the interior volume **108**. In one embodiment, the precursor may include octadecylphosphonic acid (ODPA), tungsten hexachloride, dodecanethiol, and the like. An exhaust port **115** may be coupled to the processing chamber **100** in communication with the interior volume **108** to control the pressure in the interior volume **108**. The gas pressure within the processing chamber **100** may be monitored by a pressure sensor **119**. For example, in one embodiment, the pressure of the processing chamber **100** is maintained at a pressure between 1 mtorr to 200 torr.

A substrate support assembly **126** is disposed within the interior volume **108** of the processing chamber **100**. The substrate support assembly **126** is configured to support a substrate (not shown) during processing. The substrate support assembly **126** includes a plurality of lift pins **128** movably disposed therethrough. The lift pins **128** may be actuated to project from a support surface **130** of the substrate support assembly **126**, thereby placing the substrate in a spaced-apart relation to the substrate support assembly **126** to facilitate transfer with a transfer robot (not shown).

The lid **106** is configured to support a housing **134**. The housing **134** includes a cap **136** disposed opposite the lid **106**, and encloses the vaporizer **114**. The vaporizer may suspend from the cap **136** or be coupled to another portion of the housing **134**. The vaporizer **114** includes an outlet port **142** that is directly open to the interior volume **108**. The vaporizer **114** is configured to convert precursors supplied by the precursor delivery system **112** to a vapor to be supplied to a processing region **124** defined between the substrate support assembly **126** and the vaporizer **114**. The precursors may be solid or liquid at room temperature. A thermal isolator **113** may be placed between the cap **136** and the vaporizer **114** to protect the cap **136** from overheating. A heating element **122** is positioned within the housing **134** adjacent to the vaporizer **114**. In one embodiment, the heating element **122** is supported by the cap **136** or housing **134**. The heating element **122** is configured to heat the precursor inside the vaporizer **114**. The heating element **122** may be, for example, a lamp, a light emitting diode, a laser, a resistive heater, or any suitable heater. In one embodiment, the heating element **122** heats the vaporizer **114** such that the precursor reaches a temperature between 100° C. and 600° C. The cap **136** may include a water cooled base plate **144** configured to help control the temperature of the cap **136** and housing **134**.

A controller **190** is coupled to the processing chamber **100**. The controller **190** includes a central processing unit (CPU) **192**, a memory **194**, and support circuits **196**. The controller **190** is utilized to control a rate of gas supplied by the vaporizer **114** to the processing region **124** and the temperatures of the sidewalls **104**, bottom **105**, and substrate support assembly **126**. Maintaining a substrate support assembly **126** temperature to be less than the vaporizer **114** temperature aids in reducing the deposition on the sidewalls **104** of the chamber body **102**. The CPU **192** may be of any form of a general purpose computer processor that can be used in an industrial setting. The software routines can be stored in the memory **194**, such as random access memory, read only memory, floppy or hard disk drive, or other form of digital storage. The support circuits **196** are conventionally coupled to the CPU **192** and may comprise cache, clock circuits, input/output subsystems, power supplies, and the like. The software routines, when executed by the CPU **192**, transform the CPU **192** into a specific purpose computer (controller) **190** that controls the processing chamber **100** such that the processes are performed in accordance with the present disclosure. The software routines may also be stored and/or executed by a second controller (not shown) that is located remotely from the chamber.

The controller **190** may be representative of a control system that includes a plurality of controllers. For example, the controller **190** may include a heater controller, a multichannel heater controller, and a main controller. The heater controller is configured to power the heating elements of the vaporizer **114**. The multichannel heater controller is configured to heat the sidewalls **104**, the lid **106**, the substrate support assembly **126**, and internal heat shield (shown in FIG. **2**). The main controller is configured to regulate chamber **100** pressure by varying the temperature of the vaporizer **114** and the exhaust port **115** position. The main controller also provides set points to the multichannel heater controller based on user input and recipe parameters.

FIG. **2** illustrates processing chamber **200**, according to another embodiment. The processing chamber **200** is substantially similar to the processing chamber **100**. The processing chamber **200** includes a chamber body **202** having sidewalls **204**, a bottom **205**, and a lid **206**. The sidewalls **204**, lid **206**, and bottom **205** define an interior volume **208**. In one embodiment, the sidewalls **204** and lid **206** are water cooled chamber walls. The water cooled chamber sidewalls **204** and lid **206** aid in controlling the temperature of the chamber body **202**.

The lid **206** is configured to support a housing **234**. The housing **234** includes a cap **236** disposed opposite the lid **206**, and encloses the vaporizer **114**. The vaporizer **114** may suspend from the cap **236** or be coupled to another portion of the housing **234**. An internal heat shield **210** is mounted to the cap **236** or housing **234** within the interior volume **208**. Thermal isolators **211** are positioned between the internal heat shield **210** and the cap **236** or housing **234**. The internal heat shield **210** is spaced from the chamber body **202**. The internal heat shield **210** at least partially surrounds the vaporizer **114**. The internal heat shield **210** may be heated in lieu of heating the sidewalls **204** and lid **206** of the chamber body **202** to a high temperature. The internal heat shield **210** prevents unintended condensation on the chamber body **202** and eliminates the need for an external heat shield (such as external heat shield **140** in FIG. **1**), and also eliminates the need for heating chamber walls and lid, resulting in an energy efficient system. In one embodiment, the internal heat shield **210** includes an internal pressure sensor **231** that is configured to measure the gas pressure within the volume of the internal heat shield **210**, while the

pressure sensor **119** monitors the pressure of the processing chamber **200** outside the internal heat shield **210**.

The vaporizer **114** includes an outlet port **142** that extends through the internal heat shield **210**. The outlet port **142** is open to the space within of the processing region **124** between the heat shield **210** and substrate disposed on the support surface **130** of the substrate support assembly **126**. In another embodiment, a showerhead (not shown) may be integrated into the internal heat shield **210** for uniform vapor distribution. The outlet port **142** would open into a plenum (not shown) in the showerhead. The showerhead would be heated to the same temperature as the heat shield.

In one embodiment, the processing chamber **200** further includes a first actuator **212** coupled to the cap **236**. The cap **236** is coupled to the housing **234** by a bellows **214**. The bellows **214** allow the actuator **212** to move the cap **236** in the z-direction while maintaining vacuum within the interior volume **208** of the processing chamber **200**. Moving the cap **236** in the z-direction raises and lowers the internal heat shield **210** and the vaporizer **114** coupled to the cap **236**. Lowering the internal heat shield **210** reduces the spacing within of the processing region **124** between the substrate and internal heat shield **210**, and confines the process gases directly above the substrate. This results in an efficient process material and energy utilization of the process gases. In one embodiment, the internal heat shield **210** may include an oring (not shown) at the base of the internal heat shield **210**. The oring allows for a cavity above the substrate to be pressurized to a higher pressure than the base pressure of the processing chamber **200**, resulting in an efficient process material utilization. This is measured by the internal pressure sensor **231** positioned within the internal heat shield **210**.

In another embodiment, the processing chamber **200** may include a second actuator **216** coupled to the substrate support assembly **126**. The second actuator **216** is configured to move the substrate support assembly **126** in the z-direction. Moving the substrate support assembly **126** in the upwards z-direction positions the substrate support assembly **126** closer to the internal heat shield **210** such that the processing region **124** is confined, similar to having the actuator **212** lower the internal heat shield **210**. A bellows **250** is coupled to the bottom **205** of the chamber body **202** to maintain vacuum when the actuator **216** moves the substrate support assembly **126**.

FIG. **3** illustrates another embodiment of a processing chamber **300**. The processing chamber **300** is substantially similar to processing chambers **200** and **100**. The processing chamber **300** includes a chamber body **302** having sidewalls **304**, a bottom **305**, and a lid **306**. The sidewalls **304**, lid **306**, and bottom **305** define an interior volume **308**. In one embodiment, the sidewalls **304** and lid **306** are heated. For example, the sidewalls **304** and lid **306** may be heated to a temperature of 250° C. An external heat shield **340** may be positioned around the chamber body **302** to protect users from the heated sidewalls **304** and lid **306**. In another embodiment, an internal heat shield, similar to internal heat shield **210**, may be used in lieu of heating the sidewalls **304** and lid **306**.

The lid **306** is configured to support a housing **334**. The housing **334** includes a cap **336** disposed opposite the lid **306**, and encloses the vaporizer **314**. The vaporizer **314** may suspend from the cap **336** or be coupled to another portion of the housing **334**. The vaporizer **314** includes a plurality of outlet ports **316** that is directly open to the interior volume **308**. The vaporizer **314** is configured to convert the precursor supplied by the precursor delivery system **112** to a vapor to be supplied to a processing region **324** defined between the substrate support assembly **126** and the vaporizer **114**. The plurality of outlets **316** allow for a uniform flow of vapor to be distributed to the substrate. A plurality of heating elements **322** are positioned adjacent to the vaporizer **314**. In one embodiment, the heating elements **322** are mounted to the cap **336**, between the cap **336** and the vaporizer **314**. The heating elements **322** are configured to heat the precursor inside the vaporizer **314**. The heating elements **322** may be, for example, a lamp, a light emitting diode, a laser, a resistive heater, or any suitable heating elements. In one embodiment, the heating elements **322** heat the vaporizer **314** such that the precursor reaches a temperature between 100° C. and 600° C. The plurality of heating elements **322** and the plurality of outlets **316** allow for different processing zones across a surface of the substrate.

FIG. **4** illustrates a processing chamber **400**, according to another embodiment. The processing chamber **400** is substantially similar to processing chamber **100**. The processing chamber **400** includes a chamber body **402** having sidewalls **404**, a bottom **405**, and a lid **406**. The sidewalls **404**, lid **406**, and bottom **405** define an interior volume **408**. In one embodiment, the sidewalls **404** and lid **406** are heated. For example, the sidewalls **404** and lid **406** may be heated to a temperature of 250° C. An external heat shield **440** may be positioned around the chamber body **402** to protect users from the heated sidewalls **404** and lid **406**. A substrate transfer port **110** is formed in the sidewall **404** for transferring substrates into and out of the interior volume **408**.

The lid **406** is configured to support a housing **434**. The housing **434** includes a cap **436** disposed opposite the lid **406**, and encloses the vaporizer **114**. The vaporizer **114** may suspend from the cap **436** or be coupled to another portion of the housing **434**. The vaporizer **114** includes an outlet port **142** that is directly open to the interior volume **408**. The lid **406** supports the housing at a first side **420** of a centerline **422** of the substrate support assembly **126**. Thus, the vaporizer **114** is coupled to the cap **436** at the first side **420** of the centerline **422** of the substrate support assembly **126**. The exhaust port **115** is positioned at a second side **426** of the centerline **422**, opposite the first side **420**. The positioning of the vaporizer **114** and the exhaust port **115** at opposite sides of the centerline **422** allows for a cross-flow of vapor across the surface of the substrate (not shown) in a processing region **424**.

Alternatively, in another embodiment, the housing **434** may be supported horizontally by the sidewall **404** to provide a cross-flow of vapor across the surface of the substrate. The vaporizer **114** is positioned on the sidewall **404** at a first side **420** of a centerline **422** of the substrate support assembly **126**.

In another embodiment, the chamber **400** may include a vertical chamber configuration, wherein the substrate is mounted vertically on a vertical substrate support assembly, and gas flows from the top to the bottom across the surface of the substrate.

FIG. **5** illustrates a schematic view of a substrate processing system **500**, according to one embodiment. The processing system **500** includes a processing platform **502** having a plurality of processing chambers **506**. The processing platform **502** is coupled to a transfer chamber **504**. The transfer chamber **504** includes a dual blade robot **505** disposed therein, configured to transfer two substrates (not shown) in and out of the processing platform **502**. Optionally, multiple buffer stations **508** are disposed in-between the processing chambers **506** for spatially separating each processing chamber **506** and/or conducting substrate heating or curing.

As shown in FIG. **5**, a plurality of substrates can be rotationally disposed in the processing chambers **506**. During substrate processing, a rotary track mechanism **510** is configured to rotate in a horizontal direction **512** (e.g., clockwise or counterclockwise) at a first rotating speed such that the plurality of substrates are rotated under and passed through each of the processing chambers **506** and the buffer stations **508**.

The processing chambers **506** may be any one of the processing chambers **100**, **200**, **300**, or **400** configured to deposit a precursor to the substrates. The processing chamber **506** may also include a pre-clean processing chamber to remove native oxides, contaminants, or both from exposed surfaces of the substrate, a post-deposition treatment chamber, and a deposition chamber to form a structure on the surface of the substrate.

While the foregoing is directed to embodiments of the present disclosure, other and further embodiments of the disclosure may be devised without departing from the basic scope thereof, and the scope thereof is determined by the claims that follow.

What is claimed is:

1. A processing chamber, comprising:

a chamber body and a lid, the chamber body and the lid defining an interior volume of the processing chamber, the lid supporting a housing, the housing comprising:

a vaporizer;

an internal heat shield spaced from the chamber body, the internal heat shield surrounding the vaporizer and the internal heat shield surrounding an outlet port of the vaporizer;

a heater disposed adjacent to the vaporizer; and

a first actuator coupled to the vaporizer and the internal heat shield, the first actuator operable to move the vaporizer and the internal heat shield to a position that encloses a surface of a substrate support disposed in the interior volume of the processing chamber, the enclosed surface and the internal heat shield forming a processing region that is open to the outlet port of the vaporizer.

2. The processing chamber of claim **1**, wherein the chamber body comprises:

temperature controlled walls; and

a temperature controlled lid.

3. The processing chamber of claim **2**, wherein the housing further comprises a cap.

4. The processing chamber of claim **1**, wherein the internal heat shield is heated.

5. The processing chamber of claim **4** further comprising:

a second actuator operable to move the substrate support towards the lid.

6. The processing chamber of claim **1**, wherein the outlet of the vaporizer comprises a plurality of openings.

7. The processing chamber of claim **1**, further comprising:

an exhaust port positioned at a first side of a centerline of the substrate support, and wherein the vaporizer is disposed on a second side of the centerline of the substrate support.

8. The processing chamber of claim **1**, wherein the heater is selected from the group consisting of a resistive heater, halogen lamps, light emitting diodes, lasers, and flash lamps.

9. A processing chamber, comprising:

a chamber body and a lid, the chamber body and the lid defining an interior volume of the processing chamber, the lid supporting a housing, the housing comprising:

a vaporizer;

an internal heat shield spaced from the chamber body, the internal heat shield surrounding the vaporizer and the internal heat shield surrounding an outlet port of the vaporizer;

a first thermal isolator coupled to the vaporizer;

a second thermal isolator coupled to the internal heat shield;

a heater disposed adjacent to the vaporizer; and

a first actuator coupled to the vaporizer and the internal heat shield, the first actuator operable to move the vaporizer and the internal heat shield to a position that encloses a surface of a substrate support disposed in the interior volume of the processing chamber, the enclosed surface and the internal heat shield forming a processing region that is open to the outlet port of the vaporizer.

10. The processing chamber of claim **9**, wherein the chamber body comprises:

temperature controlled walls; and

a temperature controlled lid.

11. The processing chamber of claim **9**, wherein the internal heat shield is heated.

12. The processing chamber of claim **9**, wherein the vaporizer includes a plurality of openings.

13. The processing chamber of claim **9**, further comprising:

an exhaust port positioned at a first side of a centerline of the substrate support, and wherein the vaporizer is disposed at a second side of the centerline of the substrate support.

14. A substrate processing platform for processing a plurality of substrates, the substrate processing platform comprising:

a rotary track mechanism;

a plurality of processing chambers disposed in an array about the rotary track mechanism, wherein one of the processing chambers further comprises:

a chamber body and a lid, the chamber body and the lid defining an interior volume of the processing chamber, the lid supporting a housing, the housing comprising:

a vaporizer;

an internal heat shield spaced from the chamber body, the internal heat shield surrounding the vaporizer and the internal heat shield surrounding an outlet port of the vaporizer;

a heater disposed adjacent to the vaporizer; and

a first actuator coupled to the vaporizer and the internal heat shield, the first actuator operable to move the vaporizer and the internal heat shield to a position that encloses a surface of a substrate support disposed in the interior volume of the processing chamber, the enclosed surface and the internal heat shield forming a processing region that is open to the outlet port of the vaporizer; and

a transfer robot configured to carry a plurality of substrates and concurrently transfer the substrates into and out of the substrate processing platform.

15. The substrate processing platform of claim **14**, wherein the processing chamber further comprises:

water cooled walls; and

a water cooled lid.

16. The substrate processing platform of claim **14**, wherein the internal heat shield is heated.

17. The substrate processing platform of claim **16**, wherein the processing chamber further comprises:

a second actuator operable to move the substrate support towards the lid.

18. The substrate processing platform of claim **14**, wherein the vaporizer includes a plurality of openings.

19. The substrate processing platform of claim **14**, wherein the processing chamber further comprises:

an exhaust port positioned at a first side of a centerline of the substrate support, and wherein the vaporizer is disposed at a second side of the centerline of the substrate support.

* * * * *