US010955606B2

(12) **United States Patent**
Young et al.

(10) **Patent No.: US 10,955,606 B2**
(45) **Date of Patent: Mar. 23, 2021**

(54) **METHOD OF IMPRINTING TILT ANGLE LIGHT GRATINGS**

(71) Applicant: **Applied Materials, Inc.**, Santa Clara, CA (US)

(72) Inventors: **Michael Yu-tak Young**, Cupertino, CA (US); **Ludovic Godet**, Sunnyvale, CA (US); **Robert Jan Visser**, Menlo Park, CA (US); **Wayne McMillan**, San Jose, CA (US)

(73) Assignee: **APPLIED MATERIALS, INC.**, Santa Clara, CA (US)

(*) Notice: Subject to any disclaimer, the term of this patent is extended or adjusted under 35 U.S.C. 154(b) by 321 days.

(21) Appl. No.: **16/191,340**

(22) Filed: **Nov. 14, 2018**

(65) **Prior Publication Data**

US 2019/0369321 A1 Dec. 5, 2019

Related U.S. Application Data

(60) Provisional application No. 62/677,969, filed on May 30, 2018.

(51) **Int. Cl.**
B29D 11/00 (2006.01)
F21V 8/00 (2006.01)

(52) **U.S. Cl.**
CPC ***G02B 6/0065*** (2013.01); ***B29D 11/0075*** (2013.01); ***G02B 6/0036*** (2013.01)

(58) **Field of Classification Search**
CPC . B29D 11/0075; G02B 6/0065; G02B 6/0036
See application file for complete search history.

(56) **References Cited**

U.S. PATENT DOCUMENTS

7,758,794	B2 *	7/2010	Chou	B29C 43/003 264/319
8,092,723	B2 *	1/2012	Laakkonen	B82Y 10/00 264/1.31
2006/0227425	A1	10/2006	Kleemann et al.	
2009/0224416	A1	9/2009	Laakkonen et al.	

(Continued)

FOREIGN PATENT DOCUMENTS

CN	101313234	A	11/2008
TW	200404172	A	3/2004
WO	2016/018737	A1	2/2016

OTHER PUBLICATIONS

Taiwanese Office Action issued to 108118378 dated Sep. 1, 2020.

(Continued)

Primary Examiner — Mathieu D Vargot
(74) *Attorney, Agent, or Firm* — Patterson + Sheridan LLP

(57) **ABSTRACT**

Embodiments described herein relate to methods of fabricating waveguide structures with gratings having front angles less than about 45° and back angles less than about 45°. The methods include imprinting stamps into nanoimprint resists disposed on substrates. The nanoimprint resists are subjected to a cure process. The stamps are released from the nanoimprint resist at a release angle ϑ using a release method. The nanoimprint resists are subjected to an anneal process to form a waveguide structure comprising a plurality of gratings with a front angle α and a back angle β relative to a second plane of the surface of the substrate less than about 45°.

20 Claims, 7 Drawing Sheets

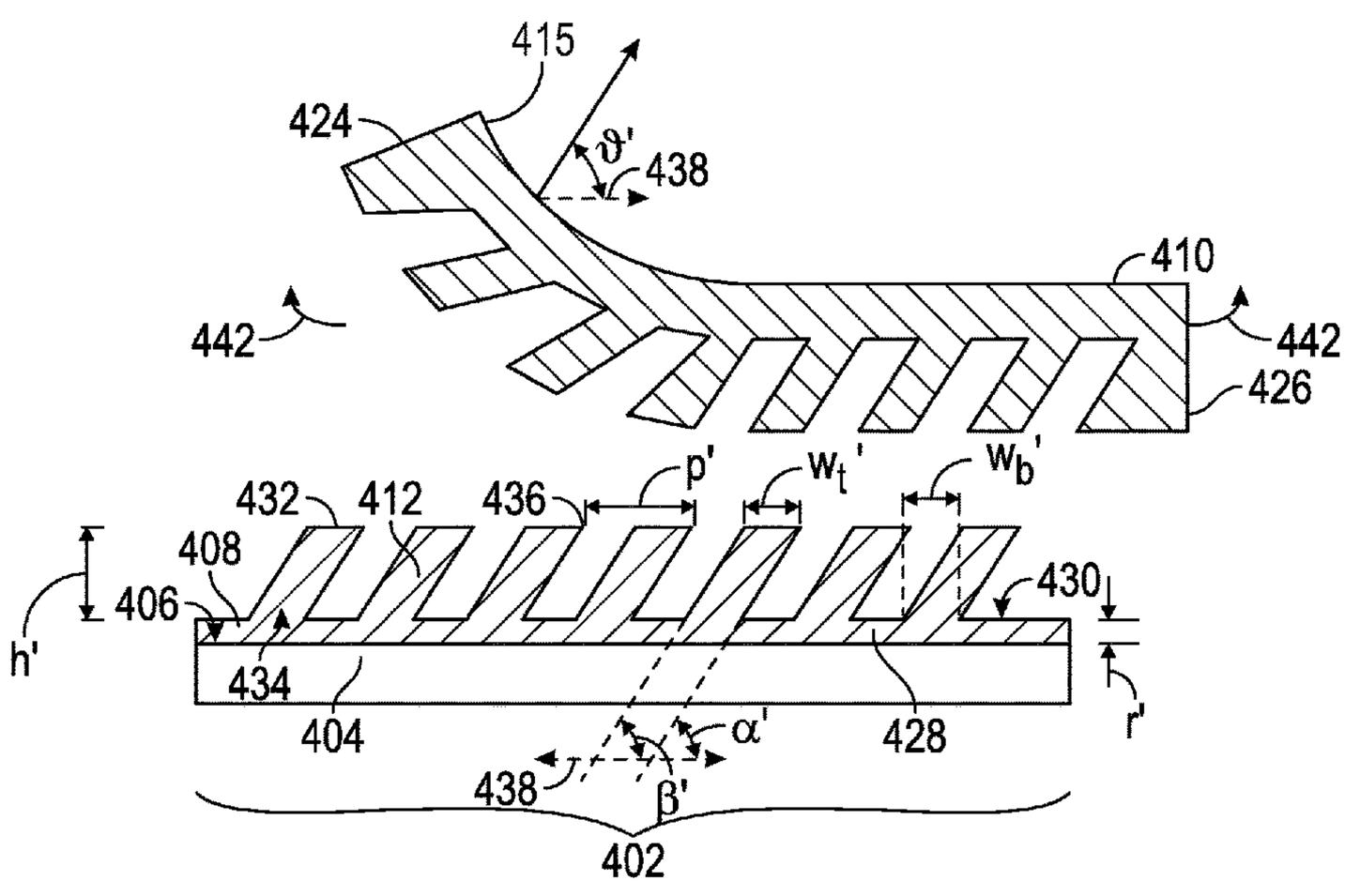

(56) **References Cited**

U.S. PATENT DOCUMENTS

2015/0034591	A1	2/2015	Vink et al.
2016/0231477	A1	8/2016	Saarikko et al.
2017/0131546	A1	5/2017	Woltman et al.

OTHER PUBLICATIONS

PCT Notification of Transmittal of the International Search Report and the Written Opinion of the International Searching Authority for International Application No. PCT/US2019/028985; dated Sep. 11, 2019; 9 total pages.

* cited by examiner

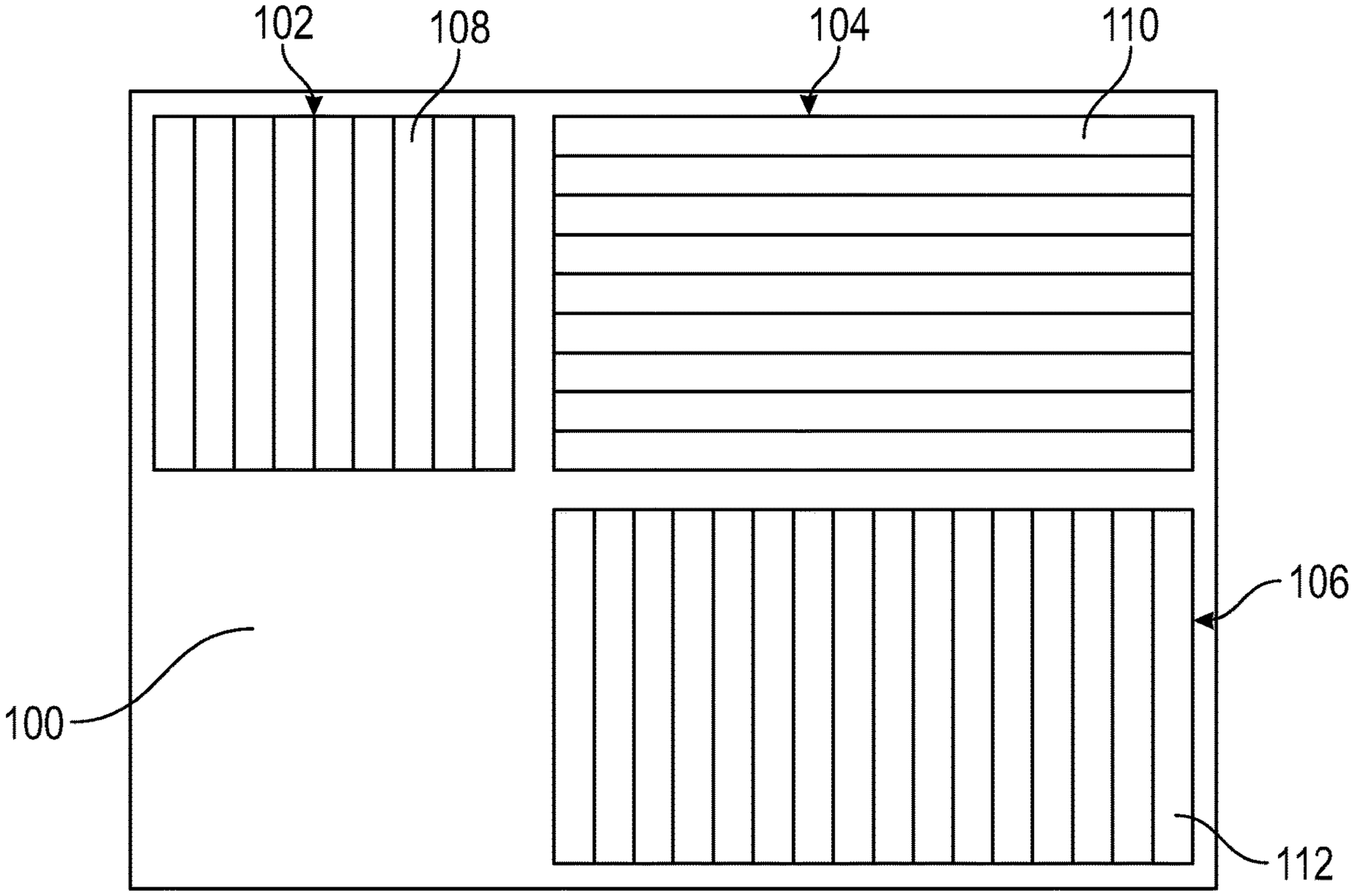

FIG. 1

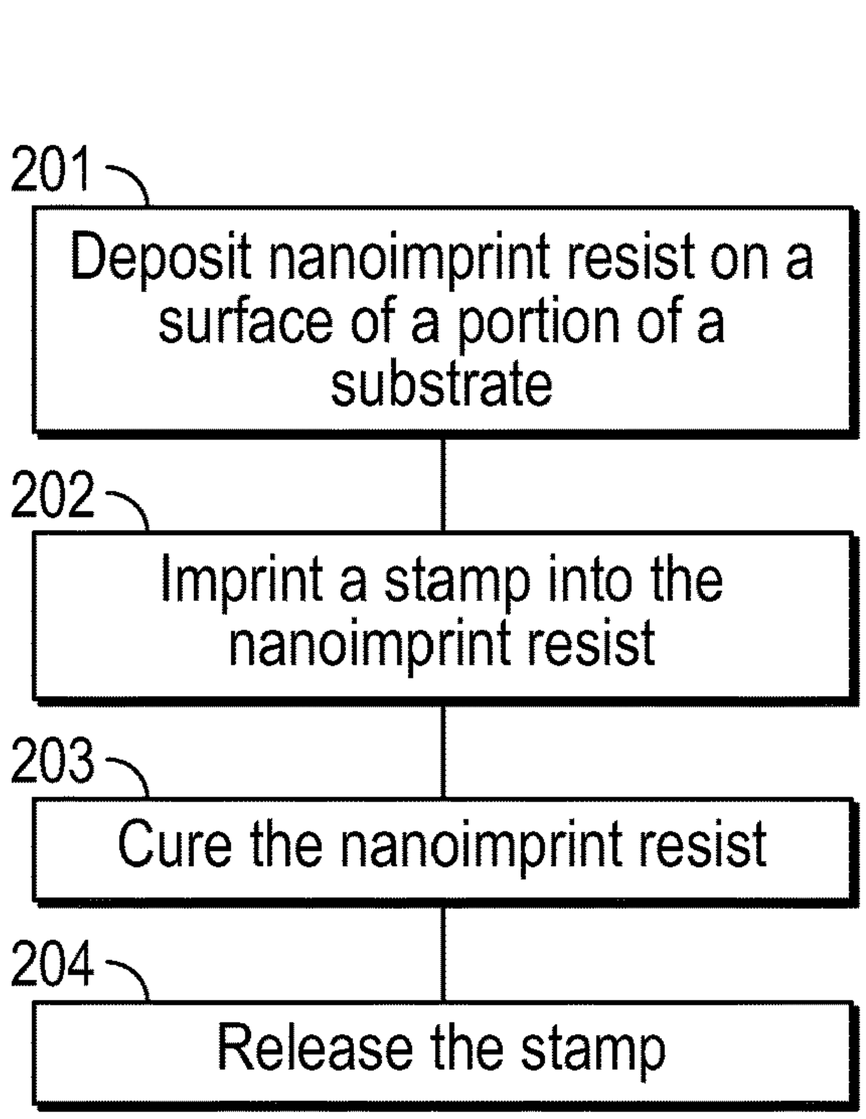
200
201
Deposit nanoimprint resist on a surface of a portion of a substrate
202
Imprint a stamp into the nanoimprint resist
203
Cure the nanoimprint resist
204
Release the stamp

FIG. 2

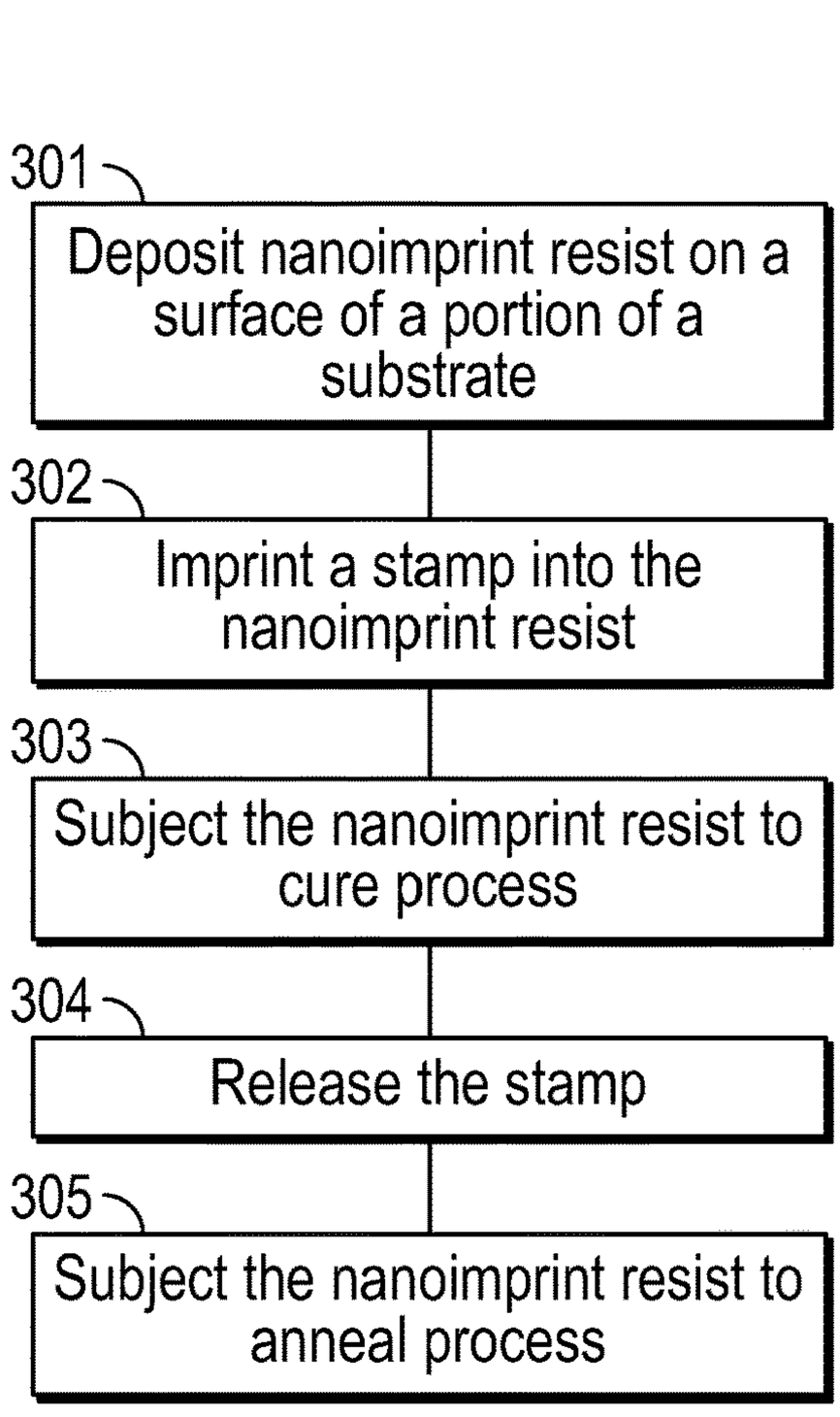
300
301
Deposit nanoimprint resist on a surface of a portion of a substrate
302
Imprint a stamp into the nanoimprint resist
303
Subject the nanoimprint resist to cure process
304
Release the stamp
305
Subject the nanoimprint resist to anneal process

FIG. 3

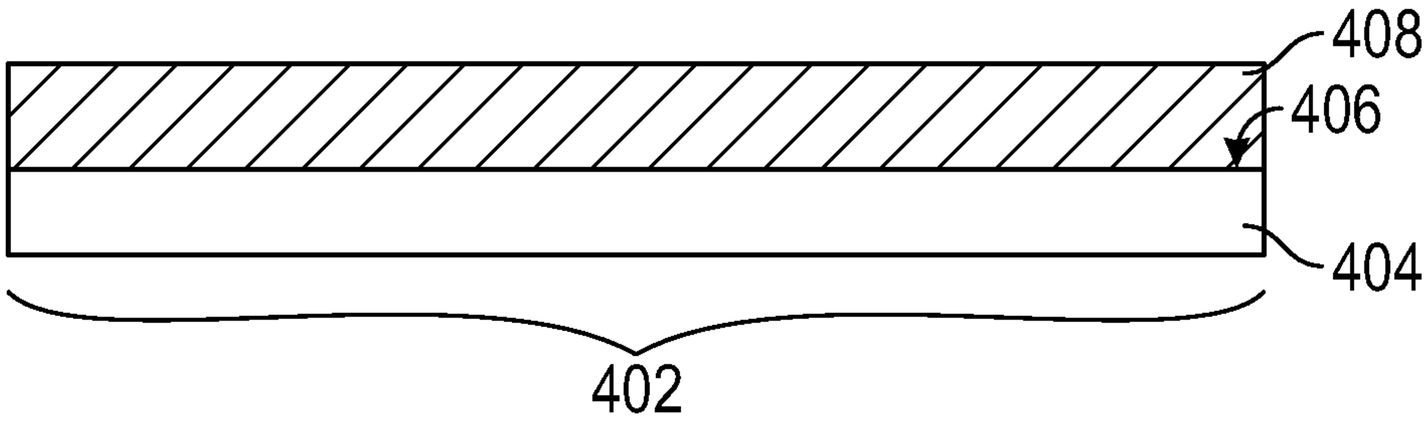
408
406
404
402

FIG. 4A

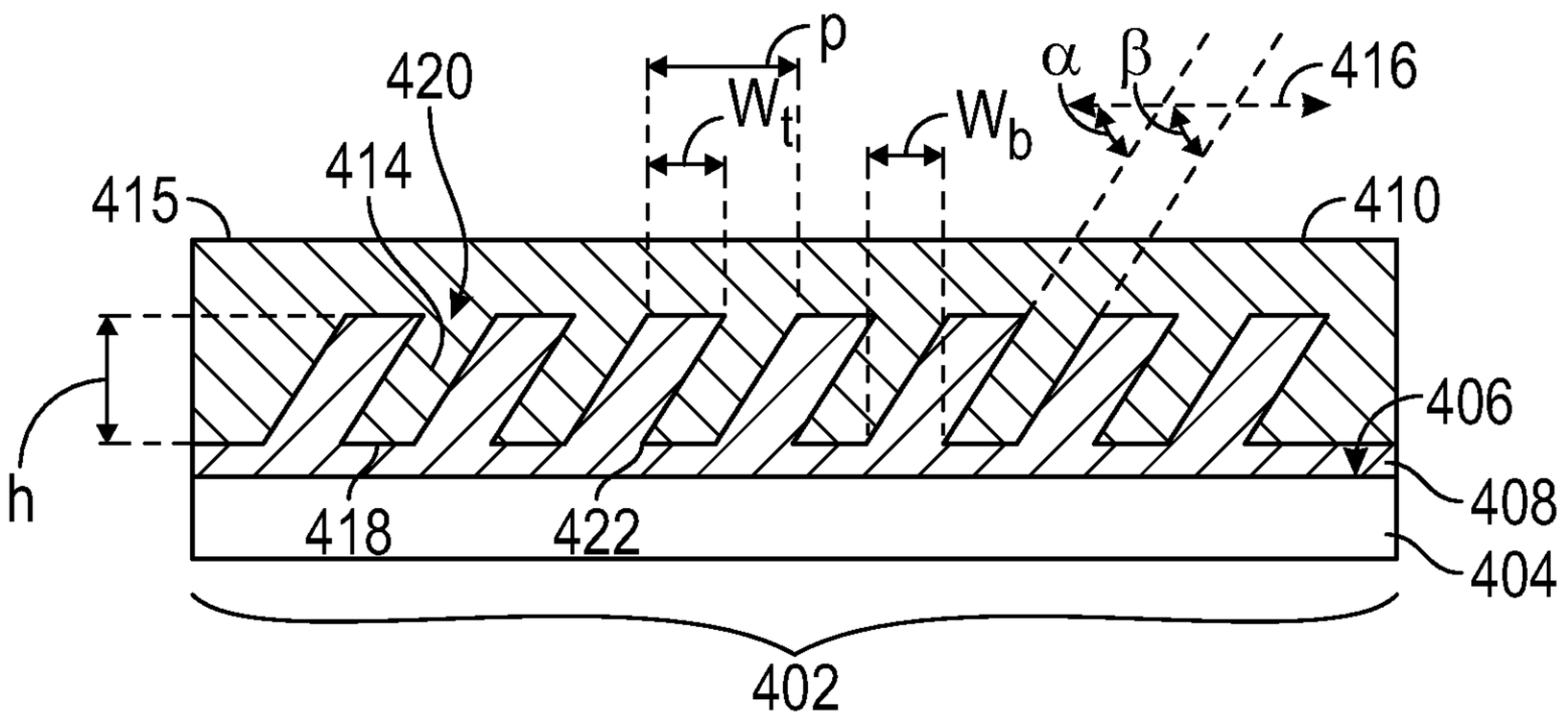
p
420
W_t
W_b
α
β
416
414
415
410
h
406
408
418
422
404
402

FIG. 4B

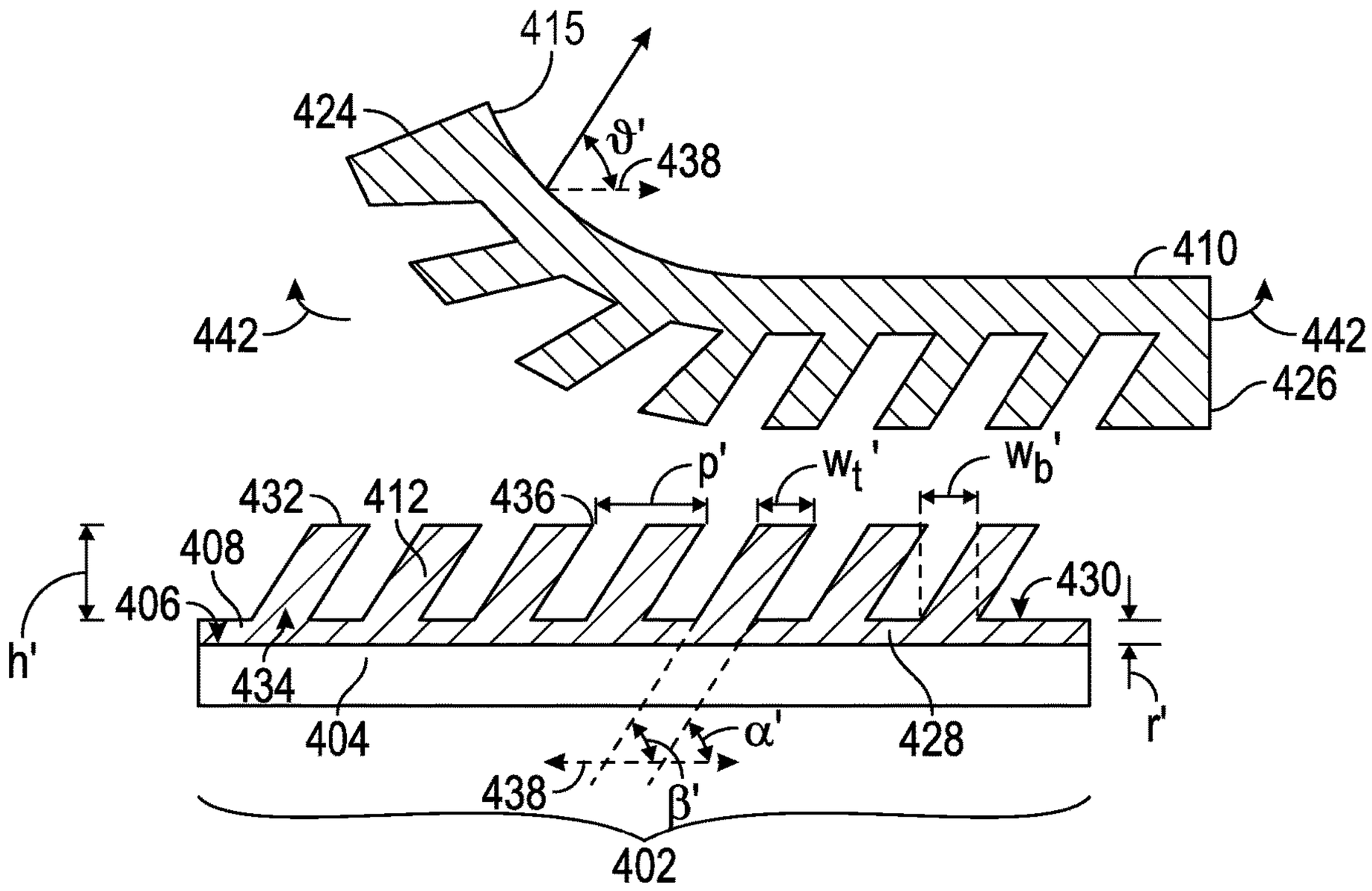
415
424
ϑ'
438
410
442
442
426
p'
w_t'
w_b'
432
412
436
408
406
430
h'
434
404
428
r'
α'
438
β'
402

FIG. 4C

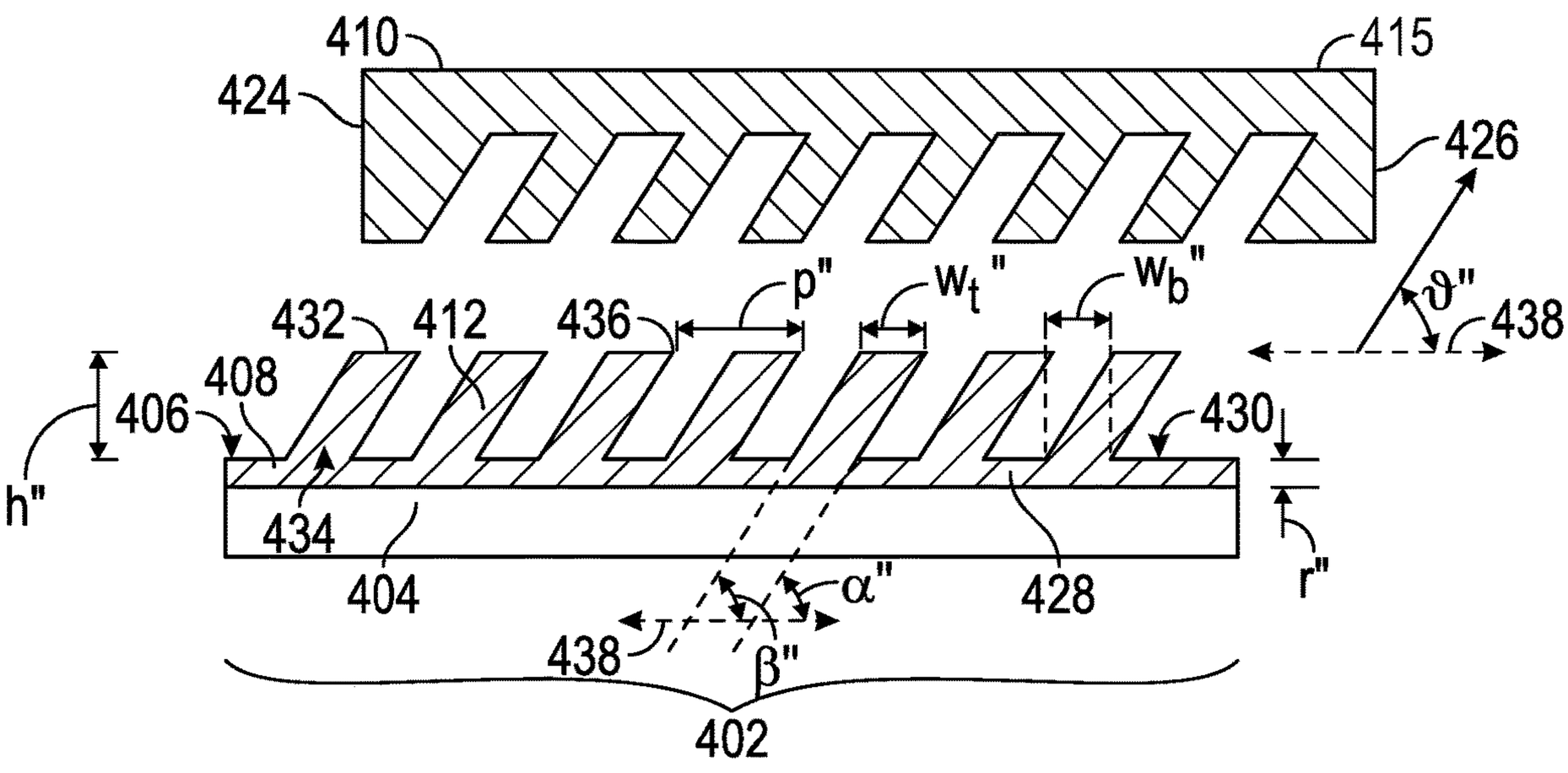
410
415
424
426
p"
w_t"
w_b"
ϑ"
438
432
412
436
408
406
430
h"
434
404
428
r"
α"
438
β"
402

FIG. 4D

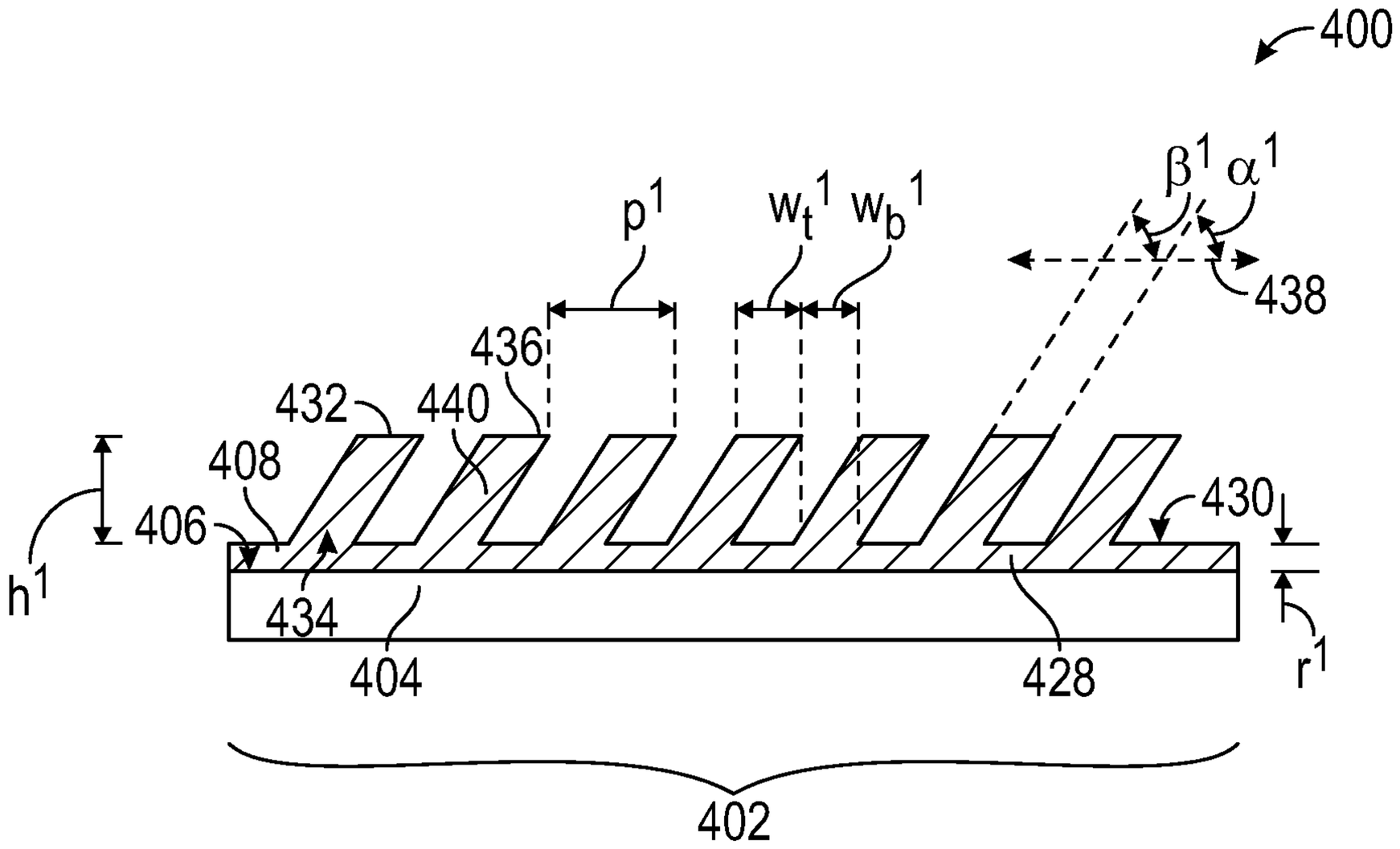
400
β^1 α^1
p^1
w_t^1 w_b^1
438
436
432
440
408
406
h^1
430
434
404
428
r^1
402

FIG. 4E

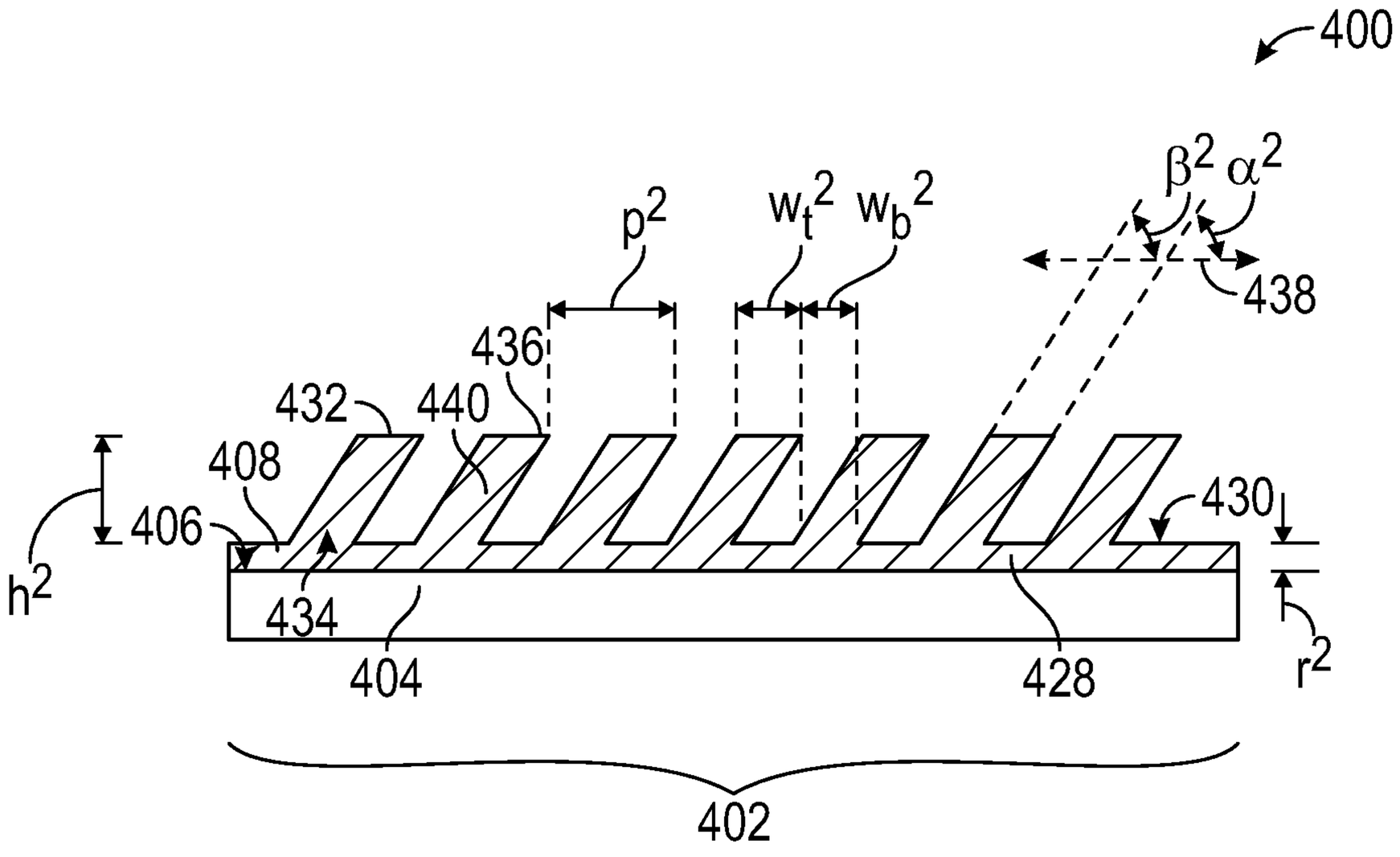
400
β^2 α^2
p^2
w_t^2 w_b^2
438
436
432
440
408
406
h^2
430
434
404
428
r^2
402

FIG. 4F

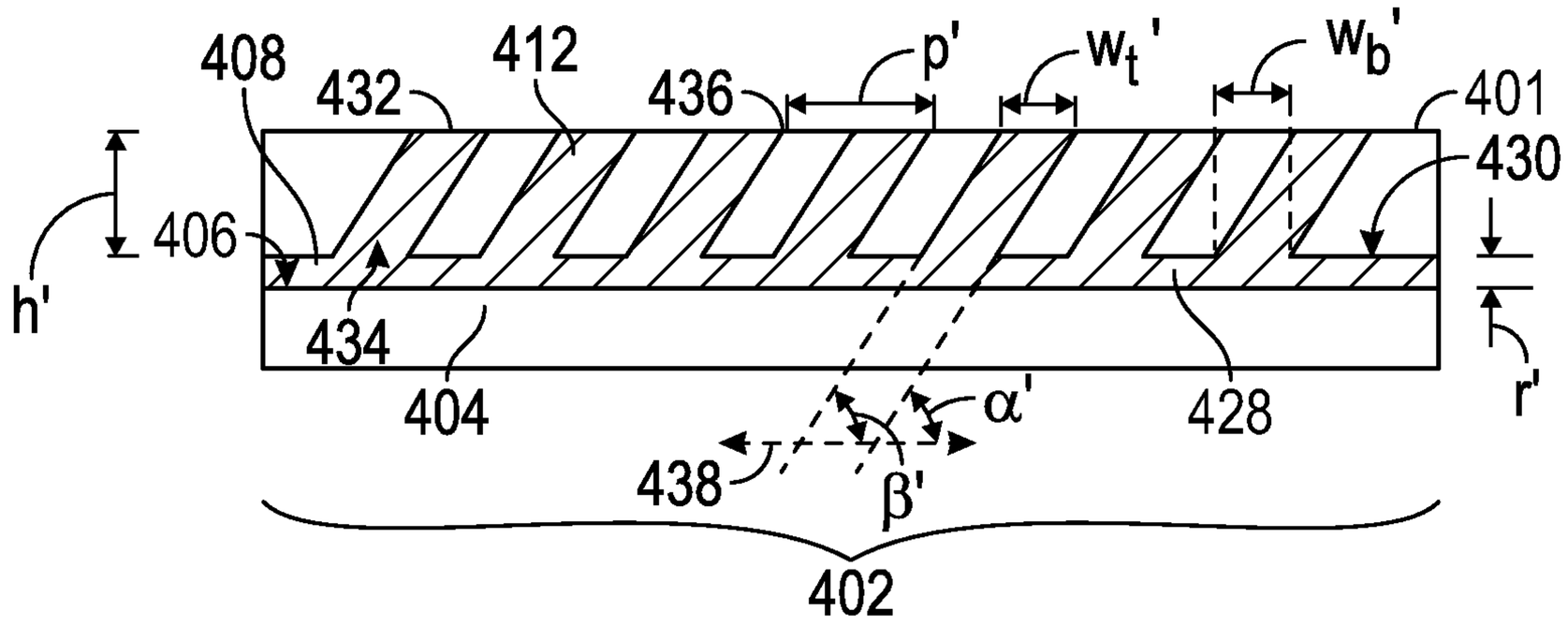
408
432
412
436
p'
w_t'
w_b'
401
430
406
h'
434
404
428
r'
α'
438
β'
402

FIG. 4G

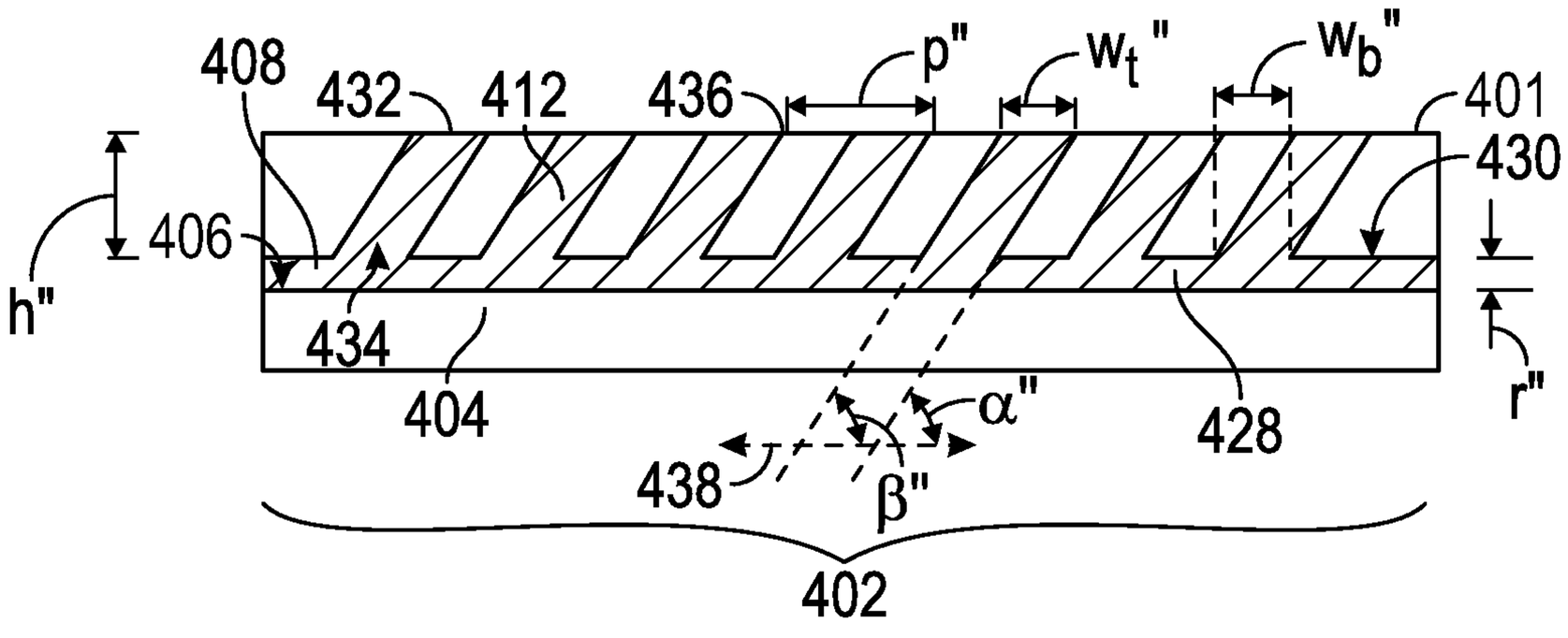
408
432
412
436
p"
w_t"
w_b"
401
430
406
h"
434
404
428
r"
α"
438
β"
402

FIG. 4H

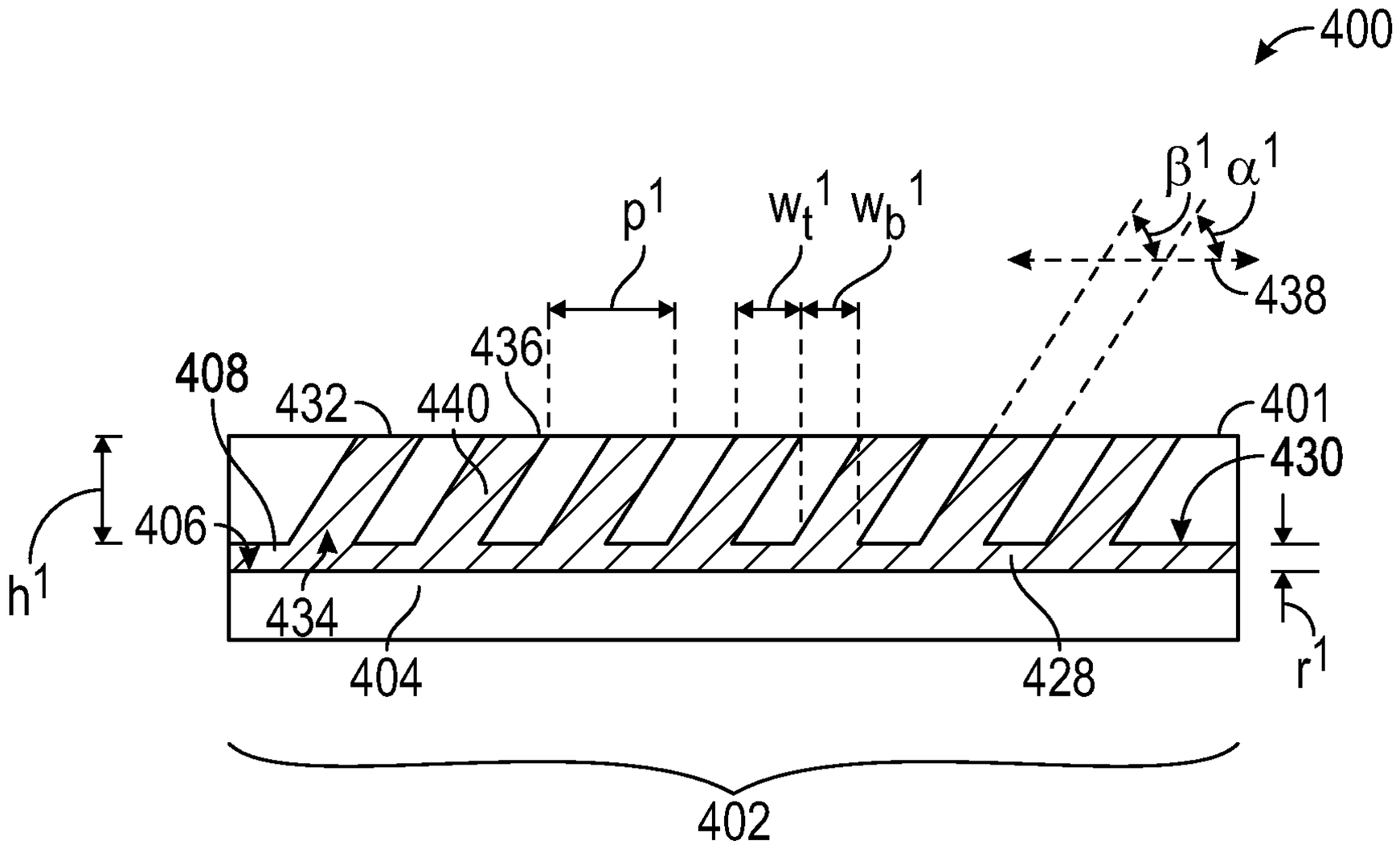
400
β^1 α^1
p^1
$w_t{}^1$ $w_b{}^1$
438
436
408
432
440
401
430
406
h^1
434
404
428
r^1
402

FIG. 4I

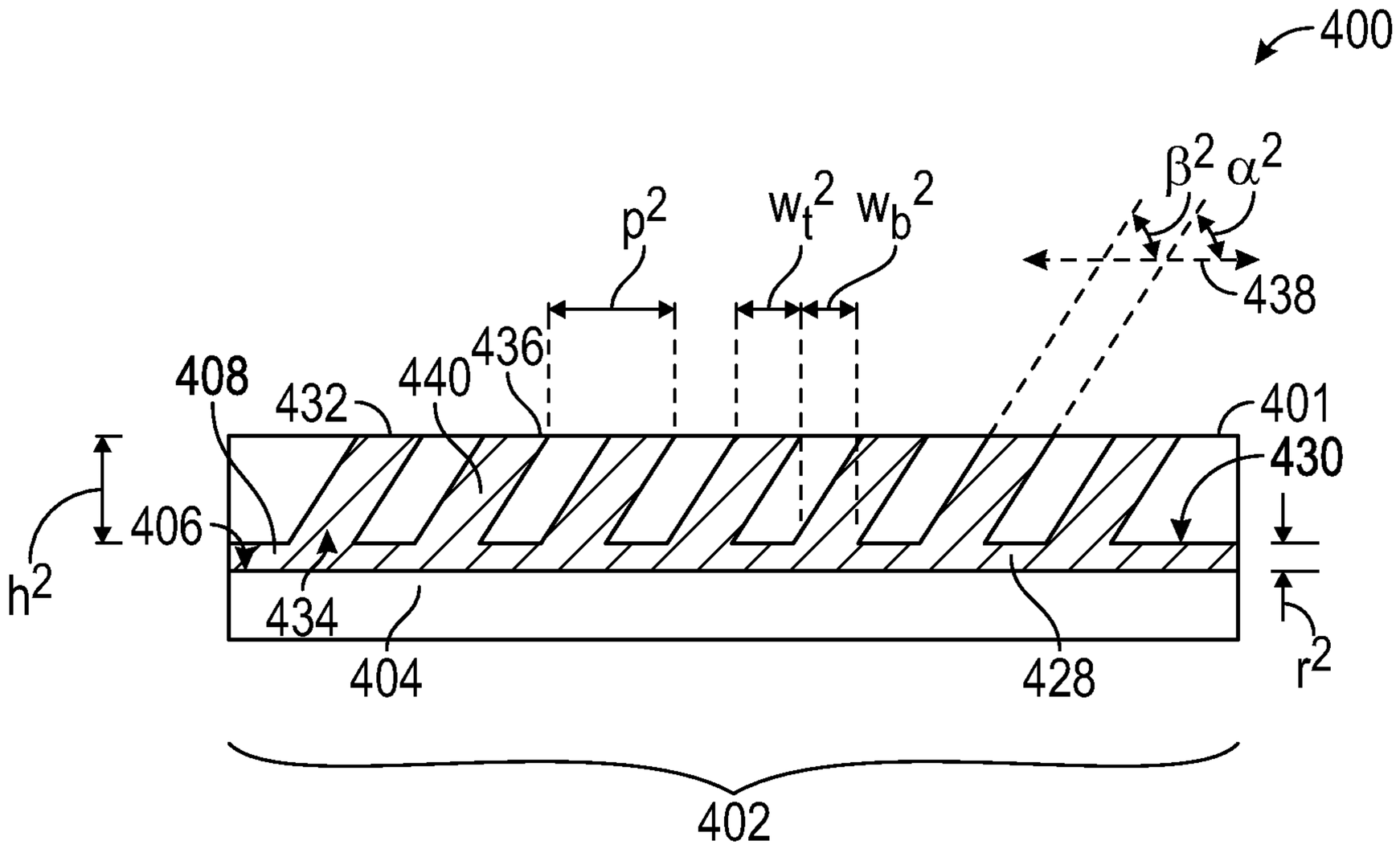
400
β^2 α^2
p^2
$w_t{}^2$ $w_b{}^2$
438
436
408
440
432
401
430
406
h^2
434
404
428
r^2
402

FIG. 4J

METHOD OF IMPRINTING TILT ANGLE LIGHT GRATINGS

CROSS-REFERENCE TO RELATED APPLICATIONS

This application claims benefit of U.S. Provisional Patent Application Ser. No. 62/677,969, filed May 30, 2018, which is herein incorporated by reference.

BACKGROUND

Field

Embodiments of the present disclosure generally relate to waveguide combiners for augmented, virtual, and mixed reality. More specifically, embodiments described herein provide for waveguide combiner fabrication utilizing nanoimprint lithography.

Description of the Related Art

Augmented reality enables an experience in which a user can still see through display lenses of glasses or other head-mounted display (HMD) devices to view a surrounding environment, yet also see images of virtual objects that are generated for display and appear as part of the environment. Augmented reality can include any type of input, such as audio and haptic inputs, as well as virtual images, graphics, and video that enhances or augments the environment that the user experiences. As an emerging technology, there are many challenges and design constraints with augmented reality.

One such challenge is displaying a virtual image overlaid on an ambient environment. Waveguide combiners are used to assist in overlaying images. Generated light is in-coupled into a waveguide combiner, propagated through the waveguide combiner, out-coupled from the waveguide combiner, and overlaid on the ambient environment. Light is coupled into and out of the waveguide combiners using surface relief gratings. The intensity of the in-coupled and out-coupled light is controlled by surface relief gratings having sidewalls with a tilt angle. Waveguide combiners may require gratings with tilt angles less than about 45 degrees relative to the surface of the waveguide combiner or greater than about 45 degrees relative to the normal of the surface of the waveguide combiner. Fabricating waveguide structures for use as a waveguide combiner or a master for nanoimprint lithography can be challenging. In particular, fabricating a waveguide structure having gratings with tilt angles relative to the surface of the waveguide structure less than about 45 degrees can be challenging due to the difficultly of releasing a nanoimprint lithography stamp with tilt angles that are less than about 45 degrees from a nanoimprint resist without damaging the nanoimprint resist and the difficulty of configuring an angled etch tool to generate an ion beam at an angle less than about 45 degrees.

Accordingly, what is needed in the art are methods of forming waveguide structure having gratings with tilt angles that are less than about 45 degrees relative to the surface of the waveguide combiner using nanoimprint lithography stamp with tilt angles about 45 degrees or greater.

SUMMARY

In one embodiment, a waveguide structure fabrication method is provided. The method includes imprinting a stamp into a nanoimprint resist disposed on a surface of a substrate. The stamp comprises a plurality of inverse gratings with an inverse front angle α and an inverse back angle β relative to a first plane of a backside surface of the stamp about 45° or greater and first dimensions. The nanoimprint resist is subjected to a cure process. The stamp is released from the nanoimprint resist at a release angle ϑ using a release method. The nanoimprint resist is subjected to an anneal process to form a waveguide structure comprising a plurality of gratings with a front angle α and a back angle β relative to a second plane of the surface of the substrate less than about 45° and third dimensions.

In another embodiment, a waveguide structure fabrication method is provided. The method includes imprinting a stamp into a nanoimprint resist disposed on a surface of a substrate. The stamp comprises a plurality of inverse gratings with an inverse front angle α and an inverse back angle β relative to a first plane of a backside surface of the stamp about 45° or greater and first dimensions. The nanoimprint resist is subjected to a cure process so that the nanoimprint resist is in a release state. The stamp is released from the nanoimprint resist in the release state using a release method of peeling the stamp from the nanoimprint resist in the release state at a release angle ϑ' to form a plurality of transition gratings with a transition front angle α' and a transition back angle β' relative to a second plane of the surface of the substrate and second dimensions. The nanoimprint resist is subjected to an anneal process to form a waveguide structure from the nanoimprint resist in an anneal state comprising a plurality of gratings with a front angle α^1 and a back angle β^1 relative to the second plane of the surface of the substrate less than about 45° and third dimensions.

In yet another embodiment, a waveguide structure fabrication method is provided. The method includes imprinting a stamp into a nanoimprint resist disposed on a surface of a substrate. The stamp comprises a plurality of inverse gratings with an inverse front angle α and an inverse back angle β relative to a first plane of a backside surface the stamp about 45° or greater and first dimensions. The nanoimprint resist is subjected to a cure process so that the nanoimprint resist is in a release state. The stamp is released from the nanoimprint resist in the release state using a release method of lifting the stamp from the nanoimprint resist in the release state at a release angle ϑ'' to form a plurality of transition gratings with a transition front angle α'' and a transition back angle β'' relative to a second plane of the surface of the substrate and second dimensions. The nanoimprint resist is subjected to an anneal process to form a waveguide structure from the nanoimprint resist in an anneal state comprising a plurality of gratings with a front angle α^2 and a back angle β^2 relative to the second plane of the surface of the surface of the substrate less than about 45° and third dimensions.

BRIEF DESCRIPTION OF THE DRAWINGS

So that the manner in which the above recited features of the present disclosure can be understood in detail, a more particular description of the disclosure, briefly summarized above, may be had by reference to embodiments, some of which are illustrated in the appended drawings. It is to be noted, however, that the appended drawings illustrate only exemplary embodiments and are therefore not to be considered limiting of its scope, and may admit to other equally effective embodiments.

FIG. **1** is a perspective, frontal view of a waveguide combiner according to an embodiment.

FIG. **2** is a flow diagram of a method for forming a waveguide combiner according to an embodiment.

FIG. **3** is a flow diagram of a method for forming a waveguide combiner according to an embodiment.

FIG. **4**A-**4**F are schematic, cross-sectional views of a portion of a waveguide combiner according to an embodiment.

FIG. **4**G-**4**J are schematic, cross-sectional views of a portion of a waveguide combiner according to an embodiment.

To facilitate understanding, identical reference numerals have been used, where possible, to designate identical elements that are common to the figures. It is contemplated that elements and features of one embodiment may be beneficially incorporated in other embodiments without further recitation.

DETAILED DESCRIPTION

Embodiments described herein relate to methods of fabricating waveguide combiners with gratings having front angles less than about 45° and back angles less than about 45°. The methods include imprinting stamps into nanoimprint resists disposed on substrates. The nanoimprint resists are subjected to a cure process. The stamps are released from the nanoimprint resist at a release angle ϑ using a release method. The nanoimprint resists are subjected to an anneal process to form a waveguide structure comprising a plurality of gratings with a front angle α and a back angle β relative to a second plane of the substrate less than about 45°.

FIG. **1** is a perspective, frontal view of a waveguide combiner **100**. It is to be understood that the waveguide combiner **100** described below is an exemplary waveguide combiner. The waveguide combiner **100** includes an input coupling region **102** defined by a plurality of gratings **108**, an intermediate region **104** defined by a plurality of gratings **110**, and an output coupling region **106** defined by a plurality of gratings **112**. The input coupling region **102** receives incident beams of light (a virtual image) having an intensity from a microdisplay. Each grating of the plurality of gratings **108** splits the incident beams into a plurality of modes, each beam having a mode. Zero-order mode (T0) beams are refracted back or lost in the waveguide combiner **100**, positive first-order mode (T1) beams are coupled though the waveguide combiner **100** to the intermediate region **104**, and negative first-order mode (T-1) beams propagate in the waveguide combiner **100** a direction opposite to the T1 beams. Ideally, the incident beams are split into T1 beams that have all of the intensity of the incident beams in order to direct the virtual image to the intermediate region **104**. One approach to split the incident beam into T1 beams that have all of the intensity of the incident beams is to optimize the tilt angle of each grating of the plurality of gratings **108** to suppress the T-1 beams and the T0 beams. The T1 beams undergo total-internal-reflection (TIR) through the waveguide combiner **100** until the T1 beams come in contact with the plurality of gratings **110** in the intermediate region **104**. A portion of the input coupling region **102** may have gratings **108** with a tilt angle relative to the surface of the waveguide combiner less than about 45° to suppress the T-1 beams and the T0 beams.

The T1 beams contact a grating of the plurality of gratings **110**. The T1 beams are split into T0 beams refracted back or lost in the waveguide combiner **100**, T1 beams that undergo TIR in the intermediate region **104** until the T1 beams contact another grating of the plurality of gratings **110**, and T-1 beams that are coupled through the waveguide combiner **100** to the output coupling region **106**. The T1 beams that undergo TIR in the intermediate region **104** continue to contact gratings of the plurality of gratings **110** until either the intensity of the T1 beams coupled through the waveguide combiner **100** to the intermediate region **104** is depleted, or remaining T1 beams propagating through the intermediate region **104** reach the end of the intermediate region **104**. The plurality of gratings **110** must be tuned to control the T1 beams coupled through the waveguide combiner **100** to the intermediate region **104** in order to control the intensity of the T-1 beams coupled to the output coupling region **106** to modulate a field of view of the virtual image produced from the microdisplay from a user's perspective and increase a viewing angle from which a user can view the virtual image. One approach to control the T1 beams coupled through the waveguide combiner **100** to the intermediate region **104** is to optimize the tilt angle of each grating of the plurality of gratings **110** to control the intensity of the T-1 beams coupled to the output coupling region **106**. A portion of the intermediate region **104** may have gratings **110** with a tilt angle relative to the surface of the waveguide combiner less than about 45° to control the intensity of the T-1 beams coupled to the output coupling region **106**.

The T-1 beams coupled through the waveguide combiner **100** to the output coupling region **106** undergo TIR in the waveguide combiner **100** until the T-1 beams contact a grating of the plurality of gratings **112** where the T-1 beams are split into T0 beams refracted back or lost in the waveguide combiner **100**, T1 beams that undergo TIR in the output coupling region **106** until the T1 beams contact another grating of the plurality of gratings **112**, and T-1 beams coupled out of the waveguide combiner **100**. The T1 beams that undergo TIR in the output coupling region **106** continue to contact gratings of the plurality of gratings **112** until either the intensity of the T-1 beams coupled through the waveguide combiner **100** to the output coupling region **106** is depleted, or remaining T1 beams propagating through the output coupling region **106** have reached the end of the output coupling region **106**. The plurality of gratings **112** must be tuned to control the T-1 beams coupled through the waveguide combiner **100** to the output coupling region **106** in order to control the intensity of the T-1 beams coupled out of the waveguide combiner **100** to further modulate the field of view of the virtual image produced from the microdisplay from the user's perspective and further increase the viewing angle from which the user can view the virtual image. One approach to control the T-1 beams coupled through the waveguide combiner **100** to the output coupling region **106** is to optimize the tilt angle of each grating of the plurality of gratings **112** to further modulate the field of view and increase the viewing angle. A portion of the intermediate region **104** may have gratings **110** with a tilt angle relative to the surface of the waveguide combiner less than about 45° to further modulate the field of view and increase the viewing angle.

One existing method of fabricating waveguide combiners utilizes nanoimprint lithography. FIG. **2** is a flow diagram of a method **200** for forming a waveguide structure of a waveguide combiner, such as the waveguide combiner **100**. At operation **201**, a nanoimprint resist is deposited on a surface of a portion of a substrate using a liquid material pour casting process, a spin-on coating process, a liquid spray coating process, a dry powder coating process, a screen printing process, a doctor blading process, a physical vapor deposition (PVD) process, a chemical vapor deposition (CVD) process, a flowable CVD (FCVD) process, or an atomic layer deposition (ALD) process. The nanoimprint

resist may include at least one of spin on glass (SOG), flowable SOG, organic, inorganic, and hybrid (organic and inorganic) nanoimprintable materials that may contain at least one of silicon oxycarbide (SiOC), titanium dioxide (TiO_2), silicon dioxide (SiO_2), vanadium (IV) oxide (VO_x), aluminum oxide (Al_2O_3), indium tin oxide (ITO), zinc oxide (ZnO), tantalum pentoxide (Ta_2O_5), silicon nitride (Si_3N_4), titanium nitride (TiN), and zirconium dioxide (ZrO_2) containing materials. The materials of nanoimprint resist are partially selected based on the tilt angle of the gratings of a resulting waveguide structure formed from the method **200** and the refractive index of the substrate to control the in-coupling and out-coupling of light and facilitate light propagation through the waveguide combiner **100**.

At operation **202**, the nanoimprint resist disposed on the portion of the substrate is imprinted by a stamp. In one embodiment, the nanoimprint resist is heated before the stamp is imprinted. The waveguide pattern includes a grating pattern have a plurality of inverse gratings. Each grating of the plurality of inverse gratings has an inverse front angle relative to a first plane of a backside surface of the stamp and an inverse back angle relative to the a first plane of a backside surface of the stamp. The stamp is molded from a master and may be made from a semi-transparent material, such as fused silica or polydimethylsiloxane (PDMS) material, or a transparent material, such as a glass material or a plastic material, to allow the nanoimprint resist to be cured by exposure to electromagnetic radiation, such as infrared (IR) radiation or ultraviolet (UV) radiation. In one embodiment, the stamp comprises a rigid backing sheet, such as a sheet of glass, to add mechanical strength to the stamp. At operation **203**, the nanoimprint resist on the surface of the substrate is cured to stabilize the nanoimprint resist. At operation **204**, the stamp is released. The resulting waveguide structure includes a plurality of gratings that corresponds to the plurality of inverse gratings so that each grating of the plurality of gratings has a front angle, also known as a slant angle or tilt angle, relative to a second plane of the surface of the substrate and a back angle, also known as a slant angle or tilt angle, relative to the second plane of the surface. In one embodiment, waveguide structure of the portion of the substrate corresponds to the input coupling region **102**, the intermediate region **104**, and/or the output coupling region **106** of the waveguide combiner **100**.

Fabricating waveguide structures with gratings having front angles less than about 45°, back angles less than about 45°, and tuned dimensions, such as grating height, residual layer height, grating top width, and grating bottom width, may be challenging with stamps having inverse gratings with inverse front angles and back angles less than about 45°. When imprinting stamp with inverse gratings having inverse front angles less than about 45°, inverse back angles less than about 45°, and high aspect ratios, the ratio of inverse grating height to inverse grating width, into a nanoimprint resist and curing the resist the resulting waveguide structure may have overlapping gratings making removing the stamp unachievable without damaging the gratings. For example, the aspect ratios may be about 2:1 to about 3:1.

FIG. **3** is a flow diagram of a method **300** for forming a waveguide structure **400** shown in FIGS. **4**A-**4**F. In one embodiment, waveguide structure **400** corresponds to the input coupling region **102**, the intermediate region **104**, and/or the output coupling region **106** of the waveguide combiner **100**. At operation **301**, as shown in FIG. **4**A, a nanoimprint resist **408** is deposited on a surface **406** of a portion **402** of a substrate **404** using a liquid material pour casting process, a spin-on coating process, a liquid spray coating process, a dry powder coating process, a screen printing process, a doctor blading process, a PVD process, a CVD process, a FCVD process, or an ALD process. The nanoimprint resist may include at least one of SOG, flowable SOG, organic, inorganic, and/or hybrid organic and inorganic nanoimprintable materials that may contain SiOC, TiO_2, SiO_2, VO_x, Al_2O_3, ITO, ZnO, Ta_2O_5, Si_3N_4, TiN, and zirconium dioxide ZrO_2 containing materials. The materials of nanoimprint resist are selected based on the front angle, back angle, and tuned dimensions of a plurality of gratings of the waveguide structure **400** formed by the method **300**. In one embodiment, the nanoimprint resist includes a percentage of a sol-gel solution that may contain SiO_2, silicon oxycarbide (SiOC), ZrO_2, or TiO_2 containing materials.

At operation **302**, a stamp **410** is imprinted into the nanoimprint resist **408**. In one embodiment, the nanoimprint resist **408** is heated to a preheat temperature before the stamp **410** is imprinted. The preheat temperature is at a temperature to promote evaporation of solvents in the nanoimprint resist **408**. In one embodiment, the preheat temperature about 50° C. to about 60° C. The stamp **410** has a plurality of inverse gratings **414**. The stamp **410** is molded from a master and may be made from a semi-transparent material, such as fused silica or polydimethylsiloxane (PDMS) material, or a transparent material, such as a glass material or a plastic material, to allow the nanoimprint resist to be cured by exposure to electromagnetic radiation, such as infrared (IR) radiation or ultraviolet (UV) radiation. In one embodiment, the stamp **410** may be coated with a mono-layer of anti-stick surface treatment coating, such as a fluorinated coating, so the stamp **410** can be mechanically removed by a machine tool or by hand peeling at a release angle ϑ'. In another embodiment, the stamp **410** comprises a rigid backing sheet, such as a sheet of glass, to add mechanical strength to the stamp **410** to release the stamp **410** at a release angle ϑ''.

As shown in FIG. **4**B, the stamp **410** has the plurality of inverse gratings with an inverse front angle α and an inverse back angle β relative to a first plane **416** of the backside surface **415** of the stamp **410**. The inverse front angle α and an inverse back angle β are about 45° or greater. The plurality of inverse gratings **414** has first dimensions of a height h, a pitch p, a grating top width w_t, and a grating bottom width w_b to account for the shrinkage of the nanoimprint resist **408** from a cure process to a release state and an anneal process to an anneal state and to account for a modification of a front angle and back angle, and second dimensions of the nanoimprint resist **408** in the release state as a result of the release method and the release angle of the stamp **410**. In one embodiment, the nanoimprint resist **408** may shrink by 20%. Shrinking the nanoimprint resist **408** may increase the refractive index of the nanoimprint resist **408**. The master has a pattern so that the stamp **410** molded from the master has a plurality of inverse gratings **414** having the height h, the pitch p, the grating top width w_t, and the grating bottom width w_b. The height h is a height from an inverse grating top **418** to an inverse grating bottom **420**. The grating top width w_t is the width of the inverse grating top **418** and the grating bottom width w_b is the width of the inverse grating bottom **420**. The pitch p is the distance between first edges **422** of the inverse grating top **418**.

At operation **303**, nanoimprint resist **408** is subjected to a cure process. Prior to the cure process the nanoimprint resist **408** is in a green state, also known as a gel state, meaning that the organic binders are present in the nanoimprint resist **408**. The cure process includes exposing the nanoimprint resist **408** to electromagnetic radiation, such as infrared (IR)

radiation or ultraviolet (UV) radiation, until the nanoimprint resist reaches a release state. In the release state the nanoimprint resist **408** may still be in the green state so the nanoimprint resist **408** is malleable for modification of a front angle α' and back angle β', and dimensions of the nanoimprint resist **408** as a result of the release method and the release angle of the stamp **410**. However, in the release state the amount of organic binders has decreased. The nanoimprint resist **408** is in the release state when the nanoimprint resist **408** reaches a cure temperature corresponding to the release state. In one embodiment, the cure temperature is about 30° C. to about 80° C.

At operation **304**, the stamp **410** is released from the nanoimprint resist **408** in the release state. As shown in FIG. **4**C, stamp **410** is peeled at the release angle ϑ' relative to a second plane **438** of the surface **406** of the substrate **404** from the nanoimprint resist **408** in the release state. In one embodiment, the stamp **410** is mechanically peeled by a machine tool at the release angle ϑ'. In another embodiment, the stamp **410** is peeled by hand at the release angle ϑ'. In other embodiments, the release angle ϑ' is about 0° to about 180°. In one embodiment, the stamp **410** is peeled from a first end **424** and a second end **426** or from the second end **426** to the first end **424**. For example, peeling from first end **424** to second end **426** may result in a lower front angle and back angle and peeling from second end **426** to first end **424** may result in higher front angle and back angle. In another embodiment, the stamp is peeled along a grating line direction **442**. Peeling along the grating line direction **442** reduces pattern collapse. After the stamp **410** peeled at the release angle ϑ', the front angle, back angle, and dimensions of the nanoimprint resist **408** are modified. The nanoimprint resist **408** in the release state has a plurality of transition gratings **412** with a front angle α' and a back angle β'. The plurality of transition gratings **412** have second dimensions with a transition height h', a transition pitch p', a transition grating top width w_t', a transition grating bottom width w_b', and a transition residual layer height r'. The front angle α' and the back angle β' are relative to a second plane **438** of the surface **406** of the substrate **404**. The transition residual layer height r' is a height from the surface **406** of the substrate **404** to a top **430** of the residual layer **428**. The transition height h' is a height from a grating top **432** to a grating bottom **434**. The transition grating top width w_t' is the width of the grating top **432** and the transition grating bottom width w_b' is the width of the grating bottom **434**. The transition pitch p' is the distance between first edges **436** of the grating top **432**. In one embodiment, the front angle α' and the back angle β, the transition height h', transition grating top width w_t', the transition grating bottom width w_b', and the transition residual layer height r' are tuned from the cure process and release of the stamp **410**.

As shown in FIG. **4**D, stamp **410** is peeled at the release angle ϑ" relative to the second plane **438** of the surface **406** of the substrate **404** from the nanoimprint resist **408** in the release state. In one embodiment, the stamp **410** is mechanically lifted by a machine tool at the release angle ϑ". In another embodiment, the stamp **410** is lifted by hand at the release angle ϑ". In some embodiments, the release angle ϑ" is about 0° to about 180°. A release angle ϑ" relative to the second plane **438** less than about 90° will result in a higher density of gratings. After the stamp **410** lifted at the release angle ϑ", the front angle, back angle, and dimensions of the nanoimprint resist **408** are modified. The nanoimprint resist **408** in the release state has a plurality of transition gratings **412** with a front angle α" and a back angle β", a transition height h", a transition pitch p", a transition grating top width w_t", a transition grating bottom width w_b", and a transition residual layer height r". In one embodiment, the front angle, back angle, and second dimensions of the transition gratings **412** from peeling and the front angle, back angle, and second dimensions of the transition gratings **412** from lifting are different as the vertical force from peeling may be controlled to affect the plurality of transition gratings **412**. In one embodiment, the front angle α" and the back angle β", the transition height h", the transition grating top width w_t", the transition grating bottom width w_b", and the transition residual layer height r" are tuned from the cure process and release of the stamp **410**.

At operation **305**, the waveguide structure **400** is formed by subjecting the nanoimprint resist **408** to an anneal process. The anneal process includes exposing the nanoimprint resist **408** to electromagnetic radiation, such as infrared (IR) radiation or ultraviolet (UV) radiation, until the nanoimprint resist reaches an anneal state. In the anneal state the nanoimprint resist **408** is rigid so the nanoimprint resist **408** is unmalleable and not in the green state. The nanoimprint resist **408** is in the anneal state when the nanoimprint resist **408** reaches an anneal temperature corresponding to the anneal state. In one embodiment, the anneal temperature is about 150° C. to about 250° C. The anneal process reduces the volume of the nanoimprint resist **408**. Therefore, the waveguide structure **400** formed by peeling the stamp **410** at the release angle ϑ', as shown in FIG. **4**E, has a plurality of gratings **440** with a front angle α^1 and a back angle β^1. The plurality of gratings **440** has third dimensions with a height h^1, a pitch p^1, a grating top width w_t^1, a grating bottom width w_b^1, and a residual layer height r^1. In one embodiment, the front angle α^1 and the back angle β^1, the height h^1, the grating top width w_t^1, the grating bottom width w_b^1, and the residual layer height r^1 are tuned from the anneal process. The waveguide structure **400** formed by lifting the stamp **410** at the release angle ϑ", as shown in FIG. **4**F has a plurality of gratings **440** with a front angle α^2 and a back angle β^2. The plurality of gratings **440** has third dimensions with a height h^2, a pitch p^2, a grating top width w_t^2, a grating bottom width w_b^2, and a residual layer height r^2. In one embodiment, the front angle α^2 and the back angle β^2, the height h^2, the grating top width w_t^2, the grating bottom width w_b^2, and the residual layer height r^2 are tuned from the anneal process. In another embodiment, the front angle, back angle, and dimensions of the plurality of gratings **440** from peeling and the front angle, back angle, and dimensions of the transition gratings **412** from lifting are different. The front angle α^1, back angle β^1, front angle α^2, and back angle β^2 are less than about 45°. In another embodiment, the front angle α^1 and the back angle β^1 is about 32° to about 37°. In yet another embodiment, the front angle α^2 and the back angle β^2 are less than 37°, for example about 32° to about 37°.

In another embodiment, after operation **304** and prior to operation **305**, as shown in FIG. **4**G and FIG. **4**H, a backfill material **401** is deposited between each transition grating of the plurality of transition gratings **412**. The material **401** has a second refractive index substantially matched to or greater than a first refractive index nanoimprint resist **408**. The backfill material **401** includes at least one of SOG, flowable SOG, organic nano imprintable, inorganic nano imprintable, and hybrid (organic and inorganic) nano imprintable materials, such as at least one of SiOC, TiO_2, SiO_2, VO_x, Al_2O_3, ITO, ZnO, Ta_2O_5, Si_3N_4, TiN, and ZrO_2 containing materials. The backfill material **401** may be deposited between each transition grating of the plurality of transition gratings **412** using a liquid material pour casting process, a spin-on

coating process, a liquid spray coating process, a dry powder coating process, a screen printing process, a doctor blading process, a PVD process, a CVD process, a FCVD process, or an ALD process. As shown in FIG. **4**I and FIG. **4**J, the nanoimprint resist **408** is subjected to the anneal process with the backfill material **401** due to the substantially matched first refractive index and second refractive index. The backfill material **401** further stresses the plurality of transition gratings **412** to decrease the front angle α^1 and back angle β^1 plurality of gratings **440** of the structure **400** formed by peeling the stamp **410**, front angle α^2, and back angle β^2 structure **400** formed by lifting the stamp **410**.

In summation, methods of fabricating waveguide combiners with gratings having front angles less than about 45°, back angles less than about 45°, and tuned dimensions are described herein are described herein. The stamp has the plurality of inverse gratings with an inverse front angle α, an inverse back angle β, and dimensions to account for the reduction in volume of the nanoimprint resist from the cure process and the anneal process and to account for the modification of the front angle and back angle, and dimensions of the nanoimprint resist in the release state. As a result of the release method and the release angle of the stamp the plurality of gratings of the waveguide combiner has a front angle less than 45°, back angle less than 45°, and tuned dimensions.

While the foregoing is directed to examples of the present disclosure, other and further examples of the disclosure may be devised without departing from the basic scope thereof, and the scope thereof is determined by the claims that follow.

What is claimed is:

1. A waveguide structure fabrication method, comprising:

imprinting a stamp into a nanoimprint resist disposed on a surface of a substrate, the stamp comprising:

a plurality of inverse gratings having:

an inverse front angle α relative to a first plane of a backside surface of the stamp, the inverse front angle α is about 45° or greater;

an inverse back angle β relative to the first plane, the inverse back angle β is about 45° or greater; and

first dimensions;

subjecting the nanoimprint resist to a cure process;

releasing the stamp from the nanoimprint resist at a release angle ϑ using a release method; and

subjecting the nanoimprint resist to an anneal process to form a waveguide structure, the waveguide structure comprising:

a plurality of gratings having:

a front angle α relative to a second plane of the surface of the substrate, the front angle α is less than about 45°;

a back angle β relative to the second plane, the back angle β is less than about 45°; and

third dimensions.

2. The method of claim **1**, wherein the nanoimprint resist is deposited on the surface of the substrate using a liquid material pour casting process, a spin-on coating process, a liquid spray coating process, a dry powder coating process, a screen printing process, a doctor blading process, a physical vapor deposition (PVD) process, a chemical vapor deposition (CVD) process, a flowable CVD (FCVD) process, or an atomic layer deposition (ALD) process.

3. The method of claim **1**, wherein the nanoimprint resist comprises at least one of spin on glass (SOG), flowable SOG, organic, inorganic, and hybrid (organic and inorganic) nanoimprintable materials.

4. The method of claim **3**, wherein the nanoimprintable materials comprise at least one of silicon oxycarbide (SiOC), titanium dioxide (TiO_2), silicon dioxide (SiO_2), vanadium (IV) oxide (VO_x), aluminum oxide (Al_2O_3), indium tin oxide (ITO), zinc oxide (ZnO), tantalum pentoxide (Ta_2O_5), silicon nitride (Si_3N_4), titanium nitride (TiN), and zirconium dioxide (ZrO_2) containing materials.

5. The method of claim **4**, wherein the nanoimprint resist includes a sol-gel solution.

6. The method of claim **1**, wherein the anneal process comprises exposing the nanoimprint resist to electromagnetic radiation until the nanoimprint resist reaches an anneal state.

7. The method of claim **6**, wherein the nanoimprint resist is in the anneal state when the nanoimprint resist reaches an anneal temperature of about 150° C. to about 250° C.

8. The method of claim **1**, wherein the cure process comprises exposing the nanoimprint resist to electromagnetic radiation until the nanoimprint resist reaches a release state.

9. The method of claim **8**, wherein the nanoimprint resist is in the release state when the nanoimprint resist reaches a cure temperature of about 30° C. to about 80° C.

10. The method of claim **8**, wherein the stamp is coated with a mono-layer of anti-stick surface treatment coating so the stamp is removed by peeling at a release angle ϑ'.

11. The method of claim **8**, wherein the stamp comprises a rigid backing sheet to add mechanical strength to the stamp to release the stamp at a release angle ϑ".

12. The method of claim **10**, wherein the release method of peeling the stamp from the nanoimprint resist at the release angle ϑ' forms a plurality of transition gratings, the plurality of transition gratings having:

a transition front angle α' relative to the second plane of the surface of the substrate;

a transition back angle β' relative to the second plane; and

second dimensions.

13. The method of claim **11**, wherein the release method of lifting the stamp from the nanoimprint resist at the release angle ϑ" forms a plurality of transition gratings, the plurality of transition gratings having:

a transition front angle α" relative to the second plane of the surface of the substrate;

a transition back angle β" relative to the second plane; and

second dimensions.

14. A waveguide structure fabrication method, comprising:

imprinting a stamp into a nanoimprint resist disposed on a surface of a substrate, the stamp comprising:

a plurality of inverse gratings having:

an inverse front angle α relative to a first plane of a backside surface of the stamp, the inverse front angle α is about 45° or greater;

an inverse back angle β relative to the first plane, the inverse back angle β is about 45° or greater; and

first dimensions;

subjecting the nanoimprint resist to a cure process so that the nanoimprint resist is in a release state;

releasing the stamp from the nanoimprint resist in the release state, the releasing the stamp comprises using a release method of peeling the stamp from the nanoimprint resist in the release state at a release angle ϑ' to form a plurality of transition gratings, the plurality of transition gratings having:

a transition front angle α' relative to a second plane of the surface of the substrate;

a transition back angle β' relative to the second plane; and

second dimensions; and

subjecting the nanoimprint resist to an anneal process; the anneal process comprises forming a waveguide structure from the nanoimprint resist in an anneal state, the waveguide structure comprising:

a plurality of gratings having:

a front angle α^1 relative to the second plane of the surface of the substrate, the front angle α^1 is less than about 45°;

a back angle β^1 relative to the second plane, the back angle β^1 is less than about 45°; and

third dimensions.

15. The method of claim **13**, wherein the inverse front angle α, the inverse back angle β, and the first dimensions of the stamp are selected to account for a reduction of the nanoimprint resist from the cure process and the anneal process and to account for the release method of peeling the stamp at the release angle ϑ' for the front angle α^1, the back angle β^1, and the third dimensions.

16. The method of claim **14**, wherein:

the first dimensions comprise a height h, a pitch p, a grating top width w_t, and a grating bottom width w_b;

the second dimensions comprise a transition height h', an transition pitch p', an transition grating top width w_t', an transition grating bottom width w_b', and a transition residual layer height r'; and

the third dimensions comprise a height h^1, a pitch p^1, a grating top width w_t^1, a grating bottom width w_b^1, and a residual layer height r^1.

17. A waveguide structure fabrication method, comprising:

imprinting a stamp into a nanoimprint resist disposed on a surface of a substrate, the stamp comprising:

a plurality of inverse gratings having:

an inverse front angle α relative to a first plane of a backside surface of the stamp, the inverse front angle α is about 45° or greater;

an inverse back angle β relative to the first plane, the inverse back angle β is about 45° or greater; and

first dimensions;

subjecting the nanoimprint resist to a cure process so that the nanoimprint resist is in a release state;

releasing the stamp from the nanoimprint resist in the release state, the releasing the stamp comprises using a release method of lifting the stamp from the nanoimprint resist in the release state at a release angle ϑ" to form a plurality of transition gratings, the plurality of transition gratings having:

a transition front angle α" relative to a second plane of the surface of the substrate;

a transition back angle β" relative to the second plane; and

second dimensions; and

subjecting the nanoimprint resist to an anneal process; the anneal process comprises forming a waveguide structure from the nanoimprint resist in an anneal state, the waveguide structure comprising:

a plurality of gratings having:

a front angle α^2 relative to the second plane of the surface of the substrate, the front angle α^2 is less than about 45°;

a back angle β^2 relative to the second plane, the back angle β^1 is less than about 45°; and

third dimensions.

18. The method of claim **13**, wherein the inverse front angle α, the inverse back angle β, and the first dimensions of the stamp are selected to account for a reduction of the nanoimprint resist from the cure process and the anneal process and to account for the release method of lifting the stamp at the release angle ϑ" for the front angle α^2, the back angle β^2, and the third dimensions.

19. The method of claim **14**, wherein the first dimensions comprise a height h, a pitch p, a grating top width w_t, and a grating bottom width w_b.

20. The method of claim **14**, wherein the second dimensions comprise a transition height h", an transition pitch p", an transition grating top width w_t', an transition grating bottom width w_b", and a transition residual layer height r" and the third dimensions comprise a height h^2, a pitch p^2, a grating top width W_t^2, a grating bottom width W_b^2, and a residual layer height r^2.

* * * * *