US011029206B2

(12) **United States Patent**
Fu et al.

(10) **Patent No.: US 11,029,206 B2**
(45) **Date of Patent: Jun. 8, 2021**

(54) **METHODS AND APPARATUS FOR WAVEGUIDE METROLOGY**

(71) Applicant: **Applied Materials, Inc.**, Santa Clara, CA (US)

(72) Inventors: **Jinxin Fu**, Fremont, CA (US); **Rutger Meyer Timmerman Thijssen**, San Jose, CA (US); **Ludovic Godet**, Sunnyvale, CA (US)

(73) Assignee: **Applied Materials, Inc.**, Santa Clara, CA (US)

(*) Notice: Subject to any disclaimer, the term of this patent is extended or adjusted under 35 U.S.C. 154(b) by 0 days.

(21) Appl. No.: **16/670,976**

(22) Filed: **Oct. 31, 2019**

(65) **Prior Publication Data**

US 2020/0141802 A1 May 7, 2020

Related U.S. Application Data

(60) Provisional application No. 62/772,887, filed on Nov. 29, 2018, provisional application No. 62/756,964, filed on Nov. 7, 2018.

(51) **Int. Cl.**
G01J 3/28 (2006.01)
G06F 3/03 (2006.01)
(Continued)

(52) **U.S. Cl.**
CPC ***G01J 3/2803*** (2013.01); ***G01J 3/18*** (2013.01); ***G02B 6/12019*** (2013.01);
(Continued)

(58) **Field of Classification Search**
CPC G01J 3/02; G01J 3/28; G01J 3/2803; G01J 3/10; G01J 3/2823
(Continued)

(56) **References Cited**

U.S. PATENT DOCUMENTS

5,359,409 A 10/1994 Wildnauer et al.
6,118,119 A 9/2000 Ruschin
(Continued)

FOREIGN PATENT DOCUMENTS

JP 2010139483 A 6/2010
JP 4976113 B2 7/2012
(Continued)

OTHER PUBLICATIONS

International Search Report and Written Opinion for Application No. PCT/US2019/058313 dated Feb. 19, 2020.

Primary Examiner — Md M Rahman
(74) *Attorney, Agent, or Firm* — Patterson & Sheridan, LLP

(57) **ABSTRACT**

Embodiments described herein relate to apparatus for measuring and characterizing performance of augmented and virtual reality waveguide structures utilizing glass substrates. The waveguide performance measuring systems generally include a light source configured to direct light towards an incoupling grating area on waveguide and one or more light detectors configured to collect light from an outcoupling grating area on a second side of the waveguide. The light source and one or more light detectors are disposed on one or more adjustable stages positioned about the waveguide. In certain embodiments, the one or more adjustable stages are configured to move in a linear fashion or revolve and/or rotate around the waveguide in an orbital motion.

19 Claims, 4 Drawing Sheets

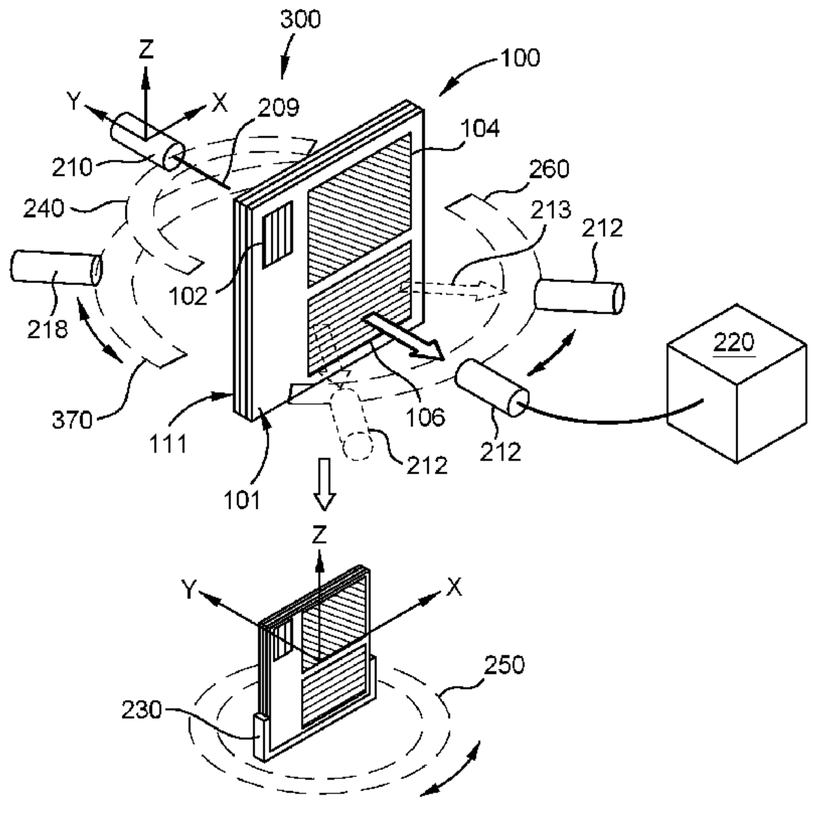

(51) **Int. Cl.**

G02B 6/12	(2006.01)
G01J 3/18	(2006.01)
H01P 1/16	(2006.01)
G06T 19/00	(2011.01)

(52) **U.S. Cl.**
CPC ***G06F 3/0304*** (2013.01); *G06T 19/006* (2013.01); *H01P 1/16* (2013.01)

(58) **Field of Classification Search**
USPC 356/326
See application file for complete search history.

(56) **References Cited**

U.S. PATENT DOCUMENTS

7,254,290	B1	8/2007	Somerstein et al.	
2003/0025899	A1	2/2003	Amara et al.	
2012/0038929	A1*	2/2012	Den Boef	G03F 7/7065 356/456
2016/0290927	A1*	10/2016	Buczkowski	G01N 21/6489
2020/0096315	A1*	3/2020	Byrnes	G02B 26/0808

FOREIGN PATENT DOCUMENTS

JP	5467875	B2	4/2014
JP	2014194473	A	10/2014
JP	2015215237	A	12/2015
JP	2016125920	A	7/2016
JP	2018021761	A	2/2018
JP	2018146437	A	9/2018
KR	10-20040010091	A	1/2004
KR	20130091390	A	8/2013

* cited by examiner

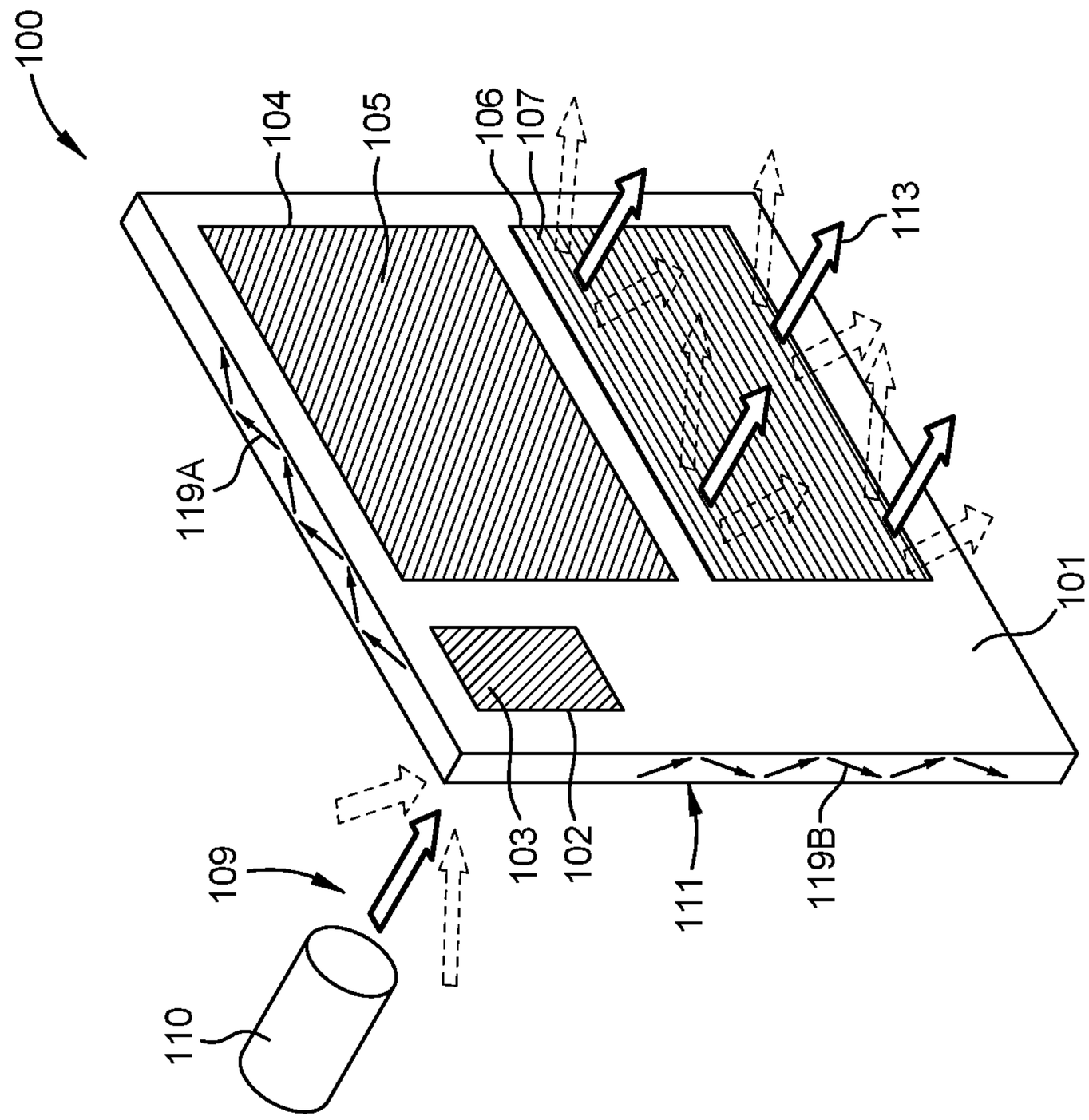
100
104
105
106
107
113
119A
101
109
103
102
111
119B
110

FIG. 1B

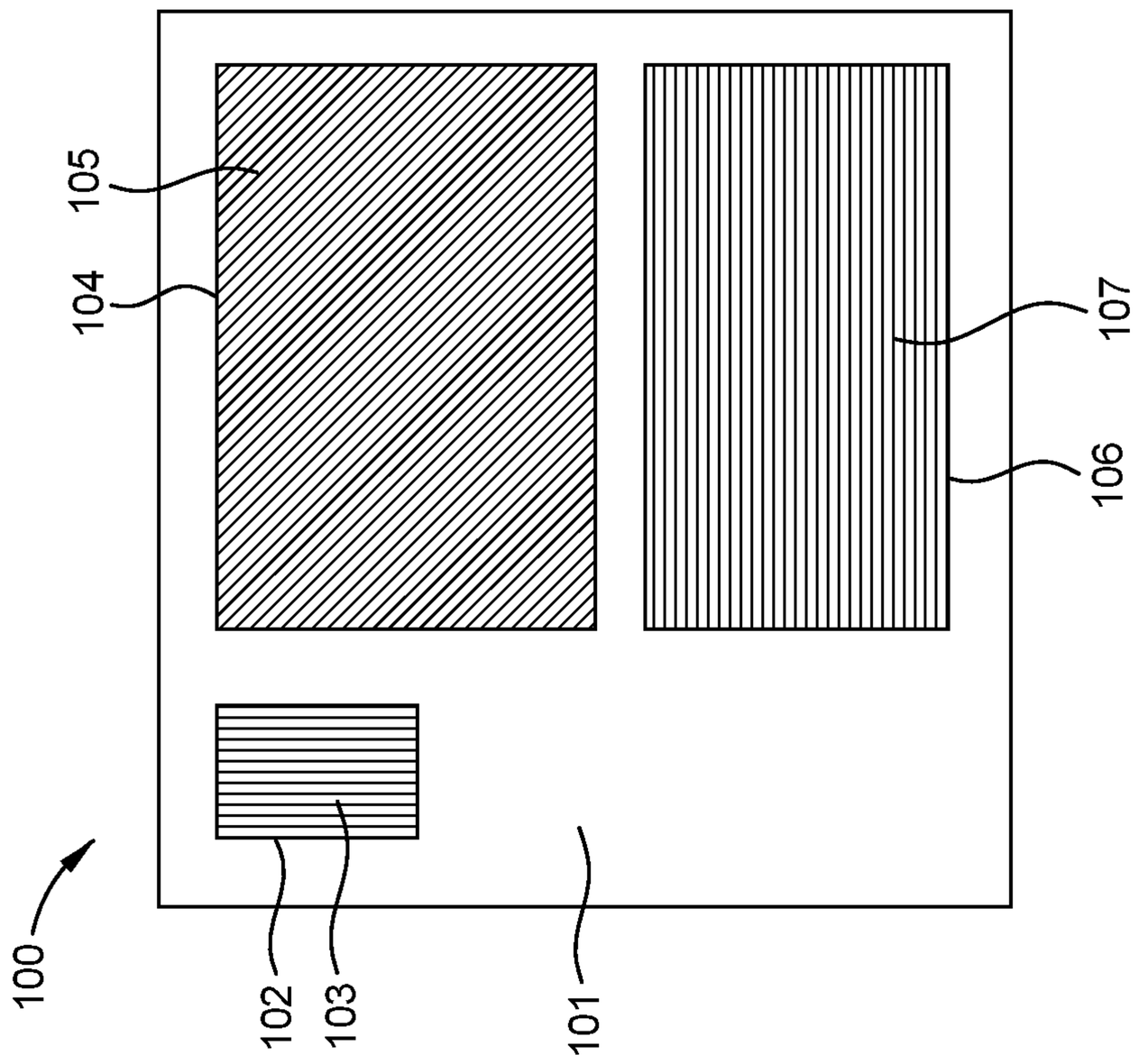
105
104
107
106
100
102
103
101

FIG. 1A

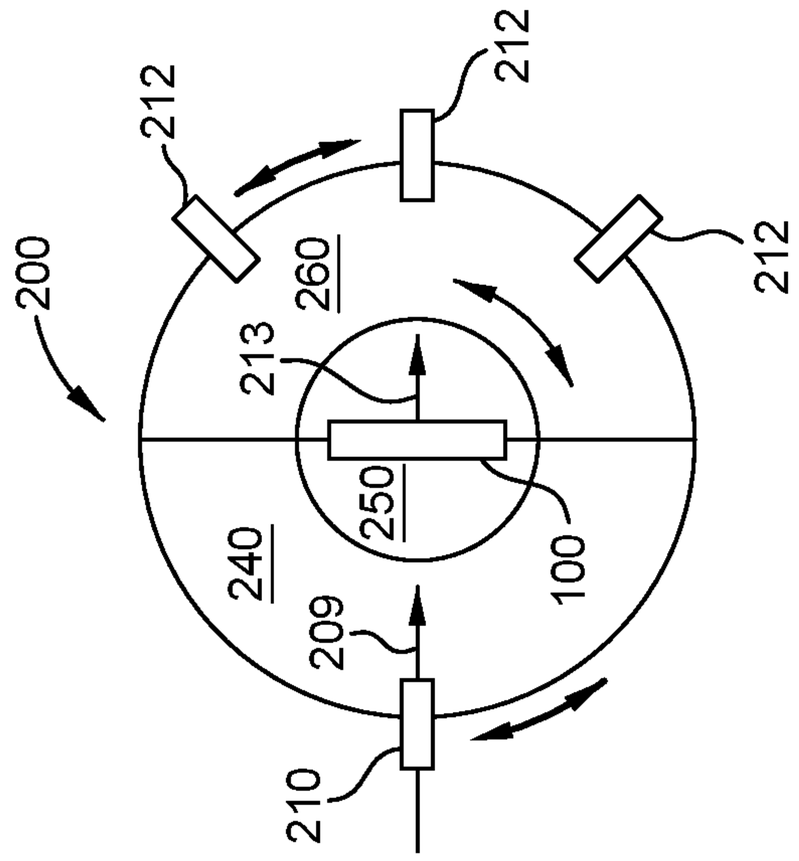
212
212
212
200
260
213
250
240
100
209
210

FIG. 2B

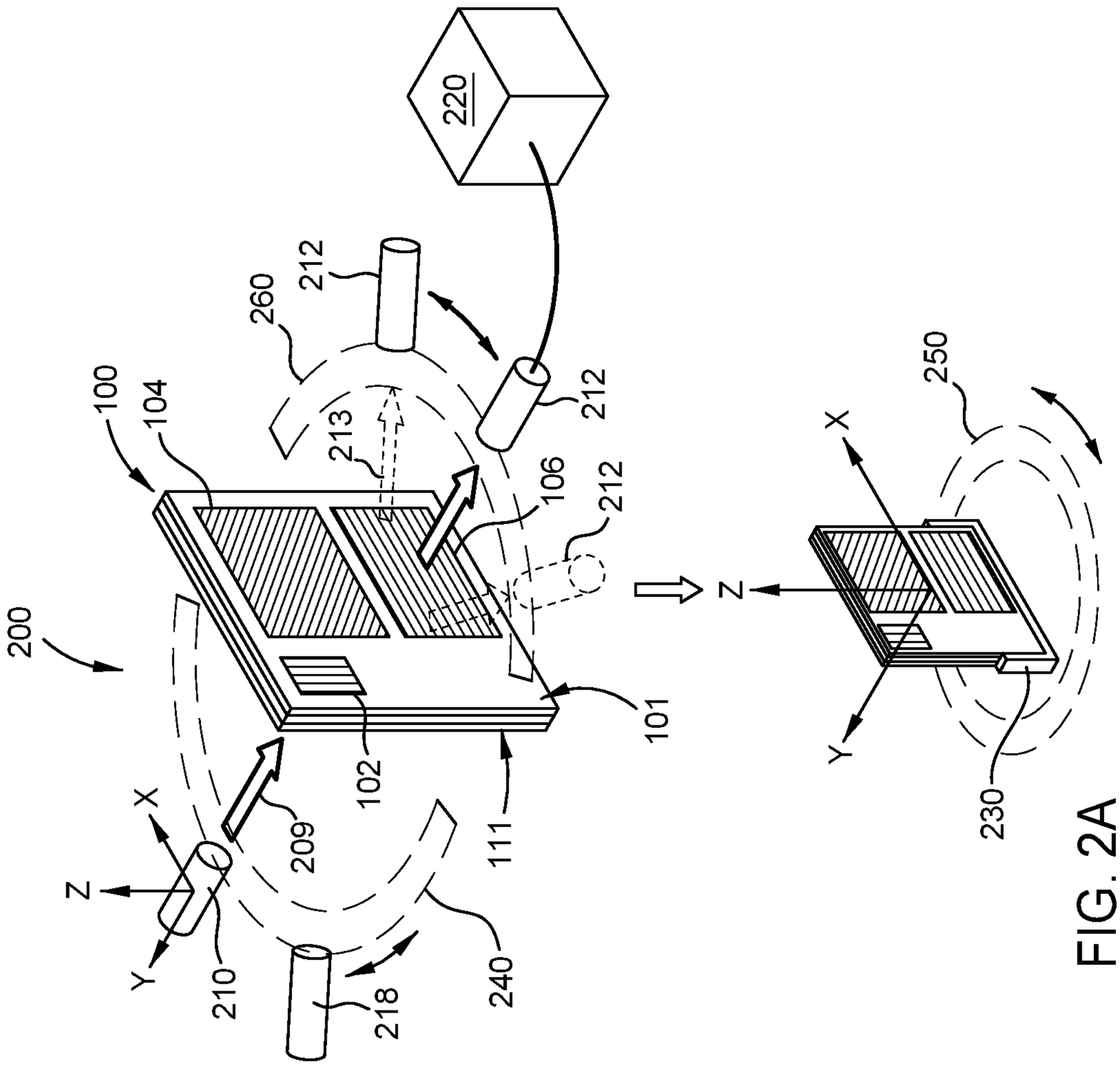
220
260
212
100
104
213
212
106
212
200
102
101
209
111
X
Z
Y
210
218
240
250
X
Z
Y
230

FIG. 2A

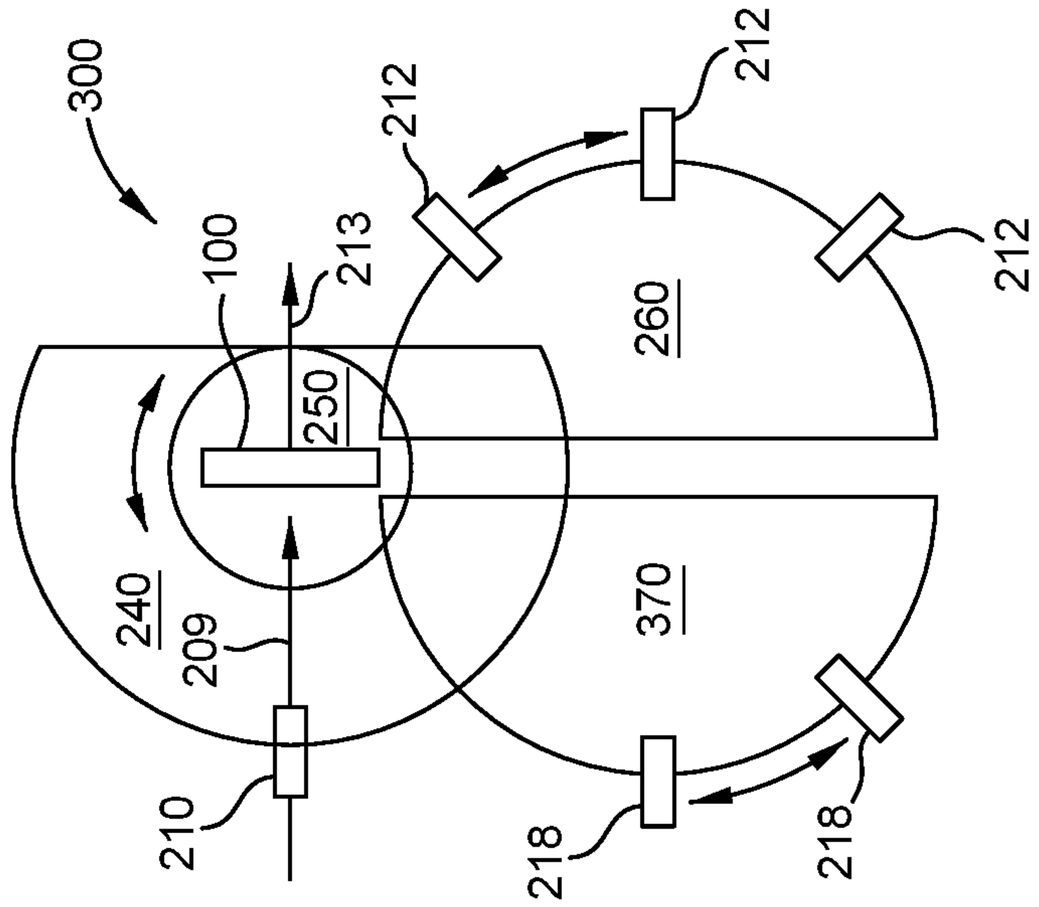
300
100
213
212
212
212
260
250
240
209
370
210
218
218

FIG. 3B

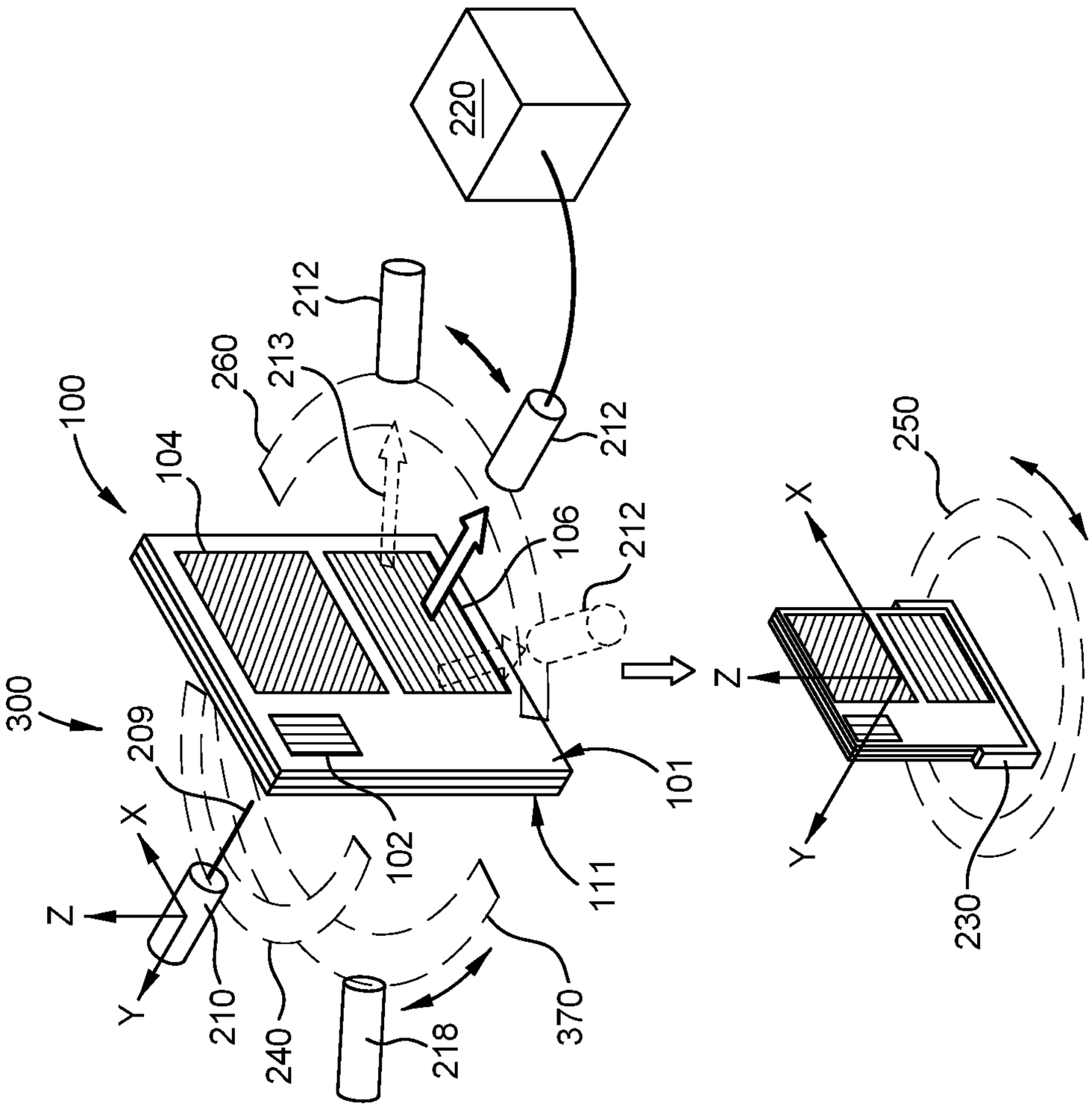
220
212
260
213
100
104
212
106
212
300
209
X
Z
Y
102
101
111
210
240
218
370
250
X
Z
Y
230

FIG. 3A

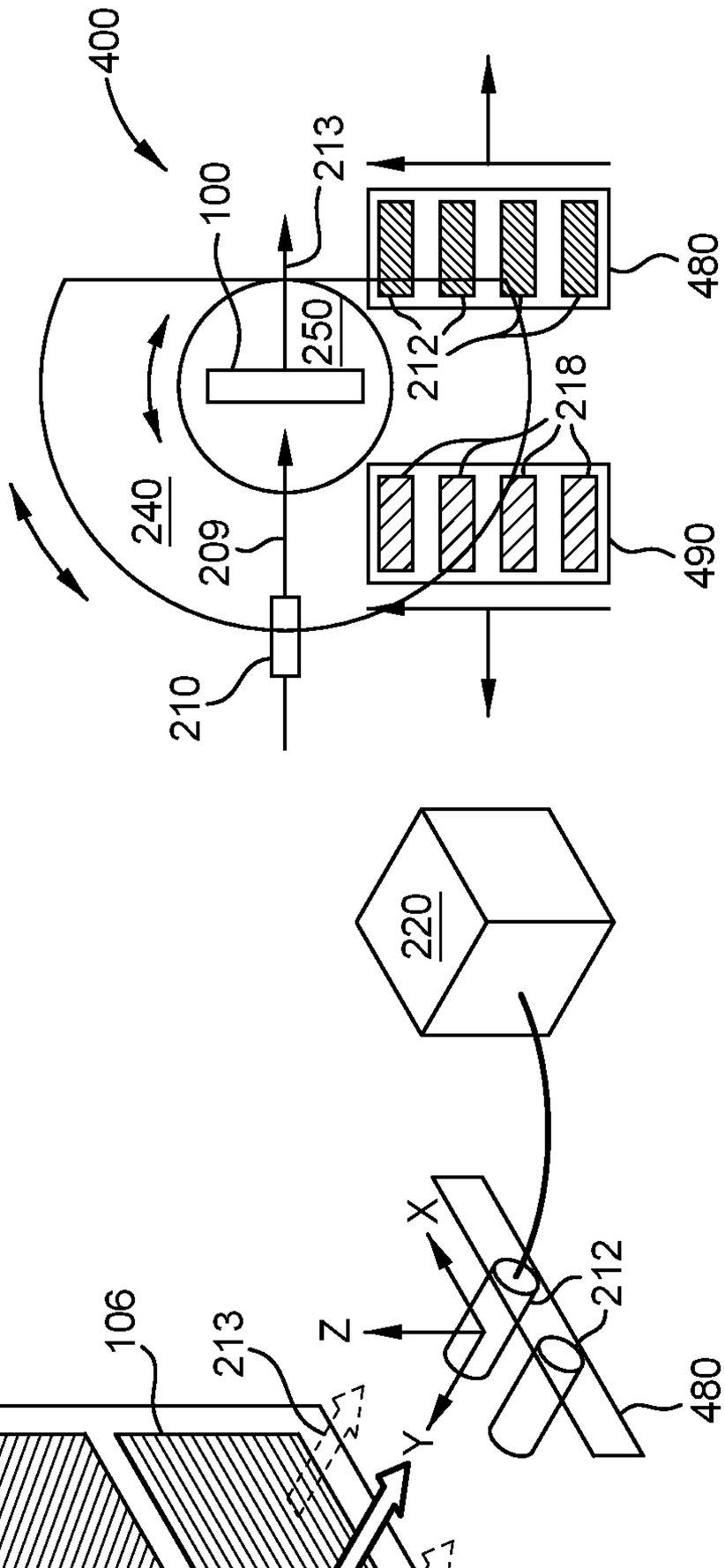
400
100
213
480
250
212
218
240
209
490
210

FIG. 4B

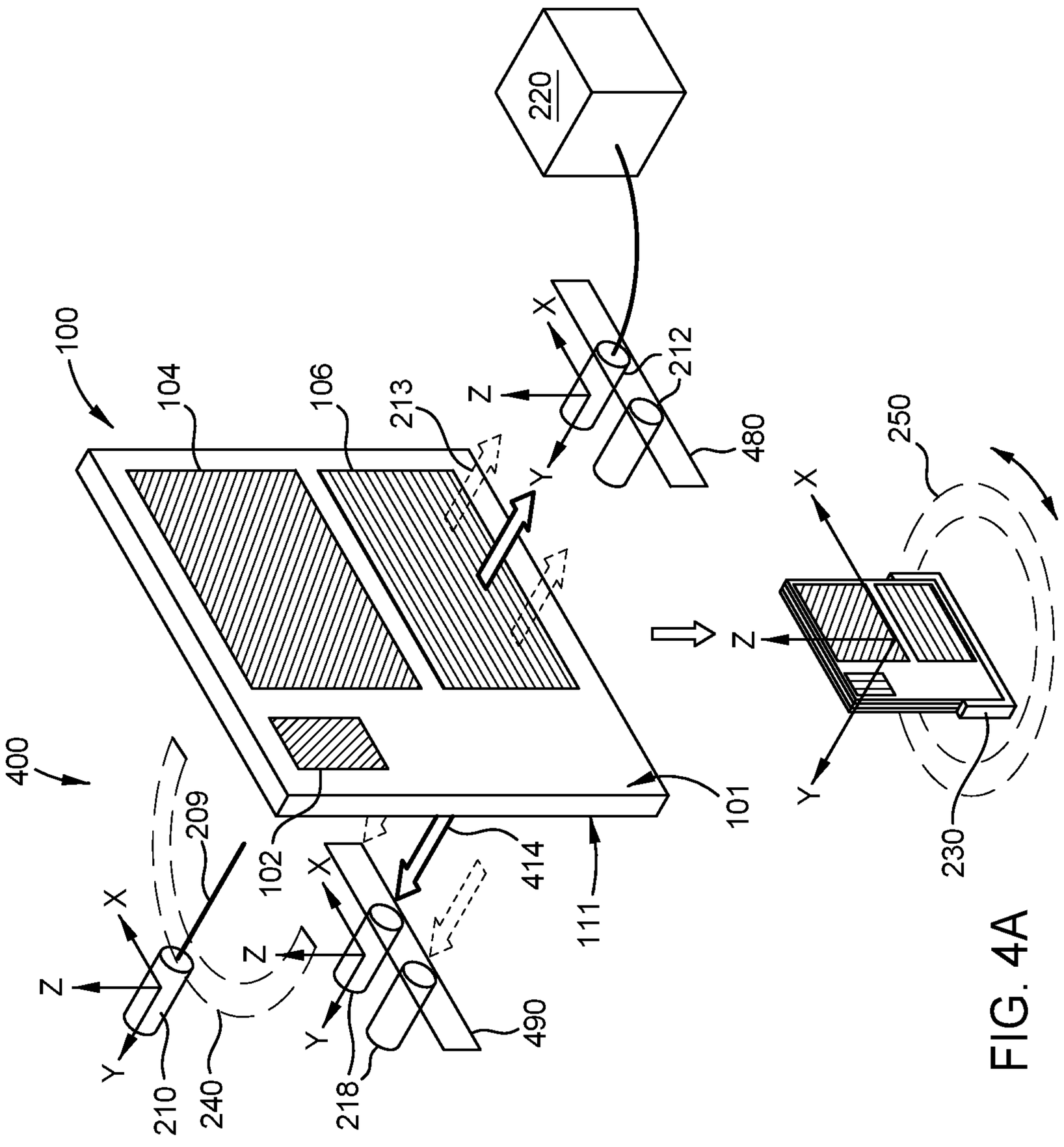
220
100
104
106
213
212
480
250
400
209
102
414
101
490
210
240
218
230
X
Y
Z

FIG. 4A

METHODS AND APPARATUS FOR WAVEGUIDE METROLOGY

CROSS-REFERENCE TO RELATED APPLICATIONS

This application claims benefit of U.S. provisional patent application Ser. No. 62/756,964, filed Nov. 7, 2018, and U.S. provisional patent application Ser. No. 62/772,887, filed Nov. 29, 2018, which are herein incorporated by reference in their entirety.

BACKGROUND

Field

Embodiments of the present disclosure generally relate to waveguides for augmented, virtual, and mixed reality and apparatus for characterization of such waveguides. More specifically, embodiments described herein relate to a metrology apparatus for determining performance efficiency of waveguide combiners.

Description of the Related Art

Virtual reality is generally considered to be a computer generated simulated environment in which a user has an apparent physical presence. A virtual reality experience can be generated in three dimensions (3D) and viewed with a head-mounted display (HMD), such as glasses or other wearable display devices that have near-eye display panels as lenses, to display a virtual reality environment that replaces an actual environment.

Augmented reality, however, enables an experience in which a user can still see through the display lenses of the glasses or other HMD device to view the surrounding environment, yet also see images of virtual objects that are generated for display and appear as part of or overlaid onto the environment. Augmented reality can include any type of input, such as audio and haptic inputs, as well as virtual images, graphics, and video that enhances or augments the environment that the user experiences. As an emerging technology, there are many challenges and design constraints with augmented reality.

One such challenge is controlling the quality of augmented reality display devices. Many current augmented reality display devices utilize waveguide combiners to assist in overlaying virtual images on ambient environments. Fabricating waveguide combiners can be challenging as waveguides tend to have non-uniform properties, causing light to be propagated differently from one device to another. As such, quality control of waveguide combiners post-fabrication is crucial for maintaining consistent performance between augmented reality display devices. Conventional waveguide metrology systems are utilized in the characterization of and post-fabrication quality control of waveguides. Conventional metrology systems are configured to illuminate and collect light propagation data from a single spot on a waveguide. Light collection from a single spot or region results in an incomplete and inaccurate characterization of waveguide performance as a whole as advanced waveguides often employ complex grating designs and have multiple different regions with different light modulation characteristics.

Accordingly, what is needed in the art are improved methods and apparatus for characterizing waveguide combiner performance.

SUMMARY

In one embodiment, a waveguide metrology system is provided. The waveguide metrology system includes a light source coupled to a first stage, a sample holder coupled to a second stage, and one or more scanning detectors disposed on a third stage. The light source is configured to direct light towards the sample holder. The scanning detectors are disposed orbitally adjacent the sample holder and opposite the light source, and are configured to collect transmissive light. A spectrometer is in communication with the scanning detectors.

In one embodiment, a waveguide metrology system is provided. The waveguide metrology system includes a light source coupled to a first stage, a sample holder coupled to a second stage, one or more scatterometers coupled to a third stage, and one or more reflection detectors coupled to a fourth stage. The light source is configured to transmit light towards the sample holder. The scatterometers are disposed adjacent the sample holder opposite the light source, and are configured to collect light transmitted by the light source. The reflection detectors are configured to collect reflected light. A spectrometer is in communication with the scatterometers and the reflection detectors.

In one embodiment, a waveguide metrology system is provided. The waveguide metrology system includes a white light source coupled to a first stage, a sample holder coupled to a second stage, two or more reflection detectors coupled to a third stage, and two or more transmission detectors coupled to a fourth stage. The white light source is configured to produce a collimated incident light beam. The reflection detectors are configured to collect light reflected from the direction of the sample holder. The transmission detectors are configured to collect light transmitted from the white light source. A spectrometer is in communication with the reflection detectors and the transmission detectors.

BRIEF DESCRIPTION OF THE DRAWINGS

So that the manner in which the above recited features of the present disclosure can be understood in detail, a more particular description of the disclosure, briefly summarized above, may be had by reference to embodiments, some of which are illustrated in the appended drawings. It is to be noted, however, that the appended drawings illustrate only exemplary embodiments and are therefore not to be considered limiting of its scope, and may admit to other equally effective embodiments.

FIG. **1**A illustrates a schematic, side view of a waveguide combiner according to an embodiment of the disclosure.

FIG. **1**B illustrates a schematic, perspective view of the waveguide combiner of FIG. **1**A according to an embodiment described herein.

FIG. **2**A illustrates a schematic, perspective view of a waveguide metrology system according to an embodiment of the disclosure.

FIG. **2**B illustrates a schematic, plan view of the metrology system of FIG. **2**A according to an embodiment of the disclosure.

FIG. **3**A illustrates a schematic, perspective view of a waveguide metrology system according to an embodiment of the disclosure.

FIG. **3**B illustrates a schematic, plan view of the metrology system of FIG. **3**A according to an embodiment of the disclosure.

FIG. **4**A illustrates a schematic, perspective view of a waveguide metrology system according to an embodiment of the disclosure.

FIG. **4**B illustrates a schematic, plan view of the metrology system of FIG. **4**A according to an embodiment of the disclosure.

To facilitate understanding, identical reference numerals have been used, where possible, to designate identical elements that are common to the figures. It is contemplated that elements and features of one embodiment may be beneficially incorporated in other embodiments without further recitation.

DETAILED DESCRIPTION

Embodiments described herein relate to apparatus for measuring and characterizing performance of augmented and virtual reality waveguide structures utilizing glass substrates. The waveguide performance measuring systems include a light source configured to direct light towards an incoupling grating area on a first side of a waveguide and one or more light detectors configured to collect light from an outcoupling grating area on a second side of the waveguide. The light source and one or more light detectors are disposed on one or more adjustable stages positioned about the waveguide. In certain embodiments, the one or more adjustable stages are configured to move in a linear fashion or rotate and/or revolve about the waveguide in an orbital motion.

FIGS. **1**A-**1**B illustrate schematic views of a waveguide combiner **100** (e.g. for VR or AR applications) having three pluralities of gratings **103**, **105**, and **107**. It is to be understood that the waveguide combiner **100** described below is an exemplary waveguide combiner, and that other waveguide combiners may be used with or modified to accomplish aspects of the present disclosure. For example, a waveguide combiner having more than three pluralities of gratings may be used, such as five or more pluralities of gratings. Alternatively, a waveguide combiner having less than three pluralities of gratings may be used, such as two pluralities of gratings. In another example, a waveguide combiner having gratings on both major planar sides may be used. In yet another example, a waveguide combiner having more than one input coupling region and more than one output coupling region may be used.

FIG. **1**A illustrates a side view of a first side **101** of the waveguide combiner **100**. The waveguide combiner **100** includes an input coupling region **102** defined by the first plurality of gratings **103**, an intermediate region **104** defined by the second plurality of gratings **105**, and an output coupling region **106** defined by the third plurality of gratings **107**. In some embodiments, the input coupling region **102**, intermediate region **104**, and output coupling region **106** are arranged so as to achieve substantially total internal reflection of light between the input coupling region **102** and the output coupling region **106**.

While operating within a display device, the input coupling region **102** receives incident beams of light (shown in FIG. **1**B) having an intensity from a microdisplay (not shown). Each grating of the plurality of gratings **103** is angled relative to a planar face of the waveguide combiner **100**, such as the first side **101**. In one embodiment, the plurality of gratings **103** splits the incident beams into a plurality of reflective and transmissive diffraction orders, for example, a zero-order mode, a positive first-order mode, or a negative first-order mode. In one embodiment, the zero-order transmissive mode beams are refracted in and out of the waveguide combiner **100** and eventually lost in the background. The positive first-order mode beams are coupled through the waveguide combiner **100** to the intermediate region **104** by total internal reflection, and the negative first-order mode beams are propagated in the waveguide combiner **100** in a direction opposite to the positive first-order beams.

FIG. **1**B illustrates a perspective view of the waveguide combiner **100** depicting the travel path of incident light beams **109** within the waveguide combiner **100**. The waveguide combiner **100** has a first planar side **101** and a second planar side **111** arranged in parallel to enable propagation of light within the internal dimensions of the waveguide combiner **100**. The waveguide combiner **100** is fabricated from an optically transparent material configured to enable a user to see through major planar sides **101**, **111** of the waveguide combiner **100**.

In one embodiment, the incident light beams **109** produced by a light source **110** are directed towards the first plurality of gratings **103** defining the input coupling region **102**. Each grating of the first plurality of gratings **103** is angled relative to a planar face (i.e. planar side) of waveguide combiner **100** to enhance desired diffraction orders of light within the waveguide combiner **100**. In one embodiment, each grating of the first plurality of gratings **103** is angled such that positive first-order mode beams are reflected within the waveguide combiner **100**. For example, each grating of the first plurality of gratings **103** is angled to suppress zero-order mode beams and negative first-order mode beams.

After contacting the first plurality of gratings **103**, desired beam modes from the incident light beams **109** are split and reflected internally within the waveguide combiner **100** toward the intermediate region **104**. Light paths **119**A, **119**B are the propagation paths (e.g. projections) of the light beams **109** inside the waveguide combiner **100**. The light beams **109** undergo total internal reflection (TIR) as they are propagated through the intermediate region **104** and make contact with the second plurality of gratings **105**. Similar to the first plurality of gratings **103**, each grating of the second plurality of gratings **105** is angled relative to a planar face of the waveguide combiner **100** to reflect desired beams of light within the waveguide combiner **100**. In one embodiment, each grating of the second plurality of gratings **105** is angled such that positive first-order mode beams are reflected within the waveguide combiner **100**. For example, each grating of the second plurality of gratings **105** is angled to suppress zero-order mode beams. In one embodiment, each grating of the second plurality of gratings **105** is angled to reflect positive first-order mode beams towards the output coupling region **106** while suppressing zero-order mode beams.

The desired beams reflected by the second plurality of gratings **105** are then directed to a third plurality of gratings **107** within the output coupling region **106**. Similar to the first plurality of gratings **103** and second plurality of gratings **105**, the third plurality of gratings **107** splits and propagates desired beam modes **113** out of the waveguide combiner **100** from the first side **101** in order to couple the beams with ambient light from the surrounding environment on an image plane. Typically, the image plane is at a focal point distanced apart from the waveguide combiner **100**.

FIGS. **2**A-**2**B illustrate schematic views of a waveguide metrology system **200** according to an embodiment of the disclosure. FIG. **2**A illustrates a perspective view of the waveguide metrology system **200**. FIG. **2**B illustrates a top-down view of the waveguide metrology system **200**.

Accordingly, FIGS. **2**A and **2**B are discussed simultaneously in order to facilitate understanding of the disclosure. For reference, x, y, and z axis frames are illustrated in FIG. **2**A. The y axis is perpendicular to the planar sides **101**, **111** of the waveguide combiner **100**. The z axis is parallel to the planar sides **101**, **111** of the waveguide combiner **100** in a vertical orientation. The x axis is parallel to the planar sides **101**, **111** of the waveguide combiner in a horizontal orientation.

The metrology system **200** includes a light source **210**, a sample holder **230**, and one or more light detectors **212**. Examples of suitable light detectors include optical sensors, active-pixel sensors (APSs), charge-coupled devices (CCD), photoresistors, photodiodes, semiconductor detectors, and the like. The light source **210** is disposed on a first stage **240** adjacent the planar side **111** and is configured to produce and direct an incident light beam **209** towards the input coupling region **102** of the waveguide combiner **100**. Any suitable type of light may be used for metrology system **200**, including but not limited to a white light source, a light engine image generator, a laser, or a light emitting diode (LED). In one embodiment, the light source **210** includes a collimating device (not shown). In some examples, the light source **210** directs collimated light towards the input coupling region **102** of the waveguide combiner **100**. In other examples, the light source **210** directs non-collimated or diffuse light towards the input coupling region **102** of the waveguide combiner **100**.

In one embodiment, the first stage **240** further includes one or more reflection detectors **218** disposed thereon. Examples of suitable reflection detectors include optical sensors, active-pixel sensors (APSs), charge-coupled devices (CCD), photoresistors, photodiodes, semiconductor detectors, and the like. The reflection detectors **218** are configured to detect and collect any light beams reflected or refracted from the planar side **111** and not internally transmitted through the waveguide combiner **100**. The one or more reflection detectors **218** and the light source **210** may be arranged in any suitable quantity and configuration on the first stage **240**. For example, two reflection detectors **218** and a single light source **210** may be arranged in a linear configuration or a crescent-like configuration, one reflection detector **218** on each peripheral side of the light source **210**. Further, the reflection detectors **218** may each be oriented at an angle in relation to the central light source **210** and a focal point of the reflection detectors **218** and light source **210**. Alternatively, a single reflection detector **218** may be disposed on the first stage **240**. In some embodiments, the first stage **240** includes one or more scanning arms configured to actuate the first stage **240**, and thus the single reflection detector **218**, enabling the collection of light reflected at different angles with a single reflection detector **218** and eliminating utilization of multiple detectors disposed at different locations and/or angles.

The first stage **240** is linearly adjustable about the x, y, and z axes so that the light source **210** and/or reflection detectors **218** may be moved in both a vertical and horizontal direction in relation the waveguide combiner **100**. For example, the first stage **240** may include several guide members extending in the x-, y-, and z-directions upon which the first stage **240** may be moved. In another example, the first stage **240** may be coupled to a scanning arm configured to linearly move along the x, y, and z axes. In yet another example, the first stage **240** may be disposed on a rolling platform configured to linearly move along the x, y, and z axes.

The first stage **240** is further configured to rotate about the z axis through a point of the first stage **240**. For example, the first stage **240** rotates from about 1 degree to about 360 degrees about the z axis through the first stage **240**. In some embodiments, the first stage **240** is also configured to revolve (e.g. orbit, gyrate) around the waveguide combiner **100** between about 1 degree to about 180 degrees on the planar side **111** thereof. For example, the first stage **240** is configured to revolve about 180 degrees around the waveguide combiner **100** and about the z axis in a clockwise or counterclockwise direction. The combination of linear, rotational, and revolutionary adjustability of the first stage **240** enables the light source **210** to direct the incident light beam **209** towards the input coupling region **102** at different angles and across different distances from the waveguide combiner **100**. Additionally, the combination of linear, rotational, and revolutionary adjustability of the first stage **240** enables the reflection detectors **218** to measure reflected beams at different angles and distances.

It is to be noted that the first stage **240**, as well as any other stages described herein, may include one or more movable (e.g. manipulable) support structures for supporting one or more light sources and/or detectors thereon. For example, in some embodiments, the stages described herein may include one or more movable platforms, stands, articulated arms, scanning arms, guides, rails, tracks, and the like.

The sample holder **230** is disposed on a second stage **250** and is configured to secure a sample (e.g., the waveguide combiner **100**) for analysis. Similar to the first stage **240**, the second stage **250** is linearly adjustable about an x, y, and z axes so that the waveguide combiner **100** may be moved in both a vertical and horizontal direction. For example, the second stage **250** may include several guide members extending in the x, y, and z axes upon which the second stage **250** may be moved. In another example, the second stage may be coupled to an adjustable scanning arm configured to linearly move the second stage **250** in the x, y, and z axes. In yet another example, the second stage **250** may be disposed on a rolling platform configured to linearly move along the x, y, and z axes.

The second stage **250** is further configured to rotate 360 degrees about the z axis through a central point of the stage. For example, the second stage **250** is rotated about the z axis in a clockwise or counterclockwise direction. The combination of linear and rotational adjustability of the second stage **250** enables the waveguide combiner **100** to incouple and outcouple light at a range of horizontal and vertical angles relative to the light source **210**, reflection detectors **218**, and light detectors **212**. The capability to measure light incoupled and outcoupled at different angles enables more precise measurement of the grating characteristics of the waveguide combiner **100** from which the patterning or etching of those gratings may be improved. In certain embodiments, a prism (not shown) is mounted onto the waveguide combiner **100** while secured on the second stage **250** to couple light into the input coupling region **102** or out of the output coupling region **106**. In such embodiments, a refractive index matching fluid is used as an intermediate between the waveguide combiner **100** and the prism to prevent unwanted reflection and refraction of the incoupling and outcoupling light. Examples of refractive index matching fluids that can be utilized herewith include silica-based matching liquids, oils, and gels.

The one or more light detectors **212** are disposed on a third stage **260** adjacent the planar side **101** and opposite the second stage **240** and light source **210**. The light detectors **212** are arranged in any suitable quantity and configuration on the third stage **260**. For example, three light detectors **212** are arranged in a crescent-like configuration, the distal light detectors each positioned at an angle of about 45 degrees in

relation to a central detector and around a focal point of the three light detectors **212**. In another embodiment, three light detectors **212** are arranged in a linear configuration, equally spaced from one another on the third stage **260**. Alternatively, a single light detector **212** may be disposed on the third stage **260**. The third stage **260** may be coupled to a scanning arm, thus enabling the collection of light diffracted at different angles by a single light detector **212** and eliminating utilization of multiple detectors.

The third stage **260** is configured to revolve around the waveguide combiner **100** between about 1 degree to about 180 degrees on the planar side **101** thereof. For example, the third stage **260** is configured to revolve about 180 degrees around the waveguide combiner **100** and about the z axis in a clockwise or counterclockwise direction. The revolutionary adjustability of the third stage **260** enables the light detectors **212** to measure the transmission light beams **213** exiting the output coupling region **106** at different angles in relation to the waveguide combiner **100**.

In the embodiment illustrated in FIG. **2**A, the light detectors **212** are further coupled to a spectrometer **220**, although any suitable light metrology system may be used in characterizing waveguide combiner performance. The light detectors **212** may further include any suitable kind of light sensor, including but not limited to scanning scatterometers or conoscopic scatterometers. The light detectors **212** are configured to detect and collect transmission light beams **213** propagated from the output coupling region **106** of the waveguide combiner **100**.

In measuring the performance characteristics of the waveguide combiner **100**, light scattering data is collected by the reflection detectors **218** and light detectors **212** and relayed to the spectrometer **220** for data analysis. Upon analysis by the spectrometer **220**, results are relayed to and displayed on a graphical user interface (GUI) (not shown). In one embodiment, performance characteristics of the sample waveguide combiner **100** are displayed as a two-dimensional grid corresponding to one of the planar sides **101**, **111** of the waveguide combiner **100**.

The adjustability of the stages **240**, **250**, **260** and the quantity of detectors **212**, **218** utilized in metrology system **200** enables a user to more accurately measure a wide range of performance characteristics of the waveguide combiner **100**. In one embodiment, the metrology system **200** is configured to measure and analyze a reflective diffraction efficiency of the waveguide combiner **100**. In another embodiment, the metrology system **200** is configured to measure and analyze the transmissive diffraction efficiency of the waveguide combiner **100**.

FIGS. **3**A-**3**B illustrate schematic views of a metrology system **300** according to an embodiment of the disclosure. FIG. **3**A illustrates a perspective view of the waveguide metrology system **300**. FIG. **3**B illustrates a top-down view of the waveguide metrology system **300** with stages **240**, **250** offset from stages **260**, **370** for purposes of clarity. Accordingly, FIGS. **3**A and **3**B are discussed simultaneously in order to facilitate understanding of the disclosure. For reference, x, y, and z axis frames are illustrated in FIG. **3**A, having substantially similar orientations to FIG. **2**A.

The metrology system **300** is similar in configuration to metrology system **200**. However, unlike in metrology system **200**, the one or more reflection detectors **218** of metrology system **300** are disposed on a fourth stage **370** adjacent the planar side **111** of the waveguide combiner **100**. The fourth stage **370** is configured to revolve around the waveguide combiner **100** between about 1 degree to about 180 degrees on the planar side **111** thereof, similar to the third stage **260**. For example, the fourth stage **370** is configured to revolve about 180 degrees around the waveguide combiner **100** and about the z axis in a clockwise or counterclockwise direction. The revolutionary adjustability of the fourth stage **370** enables the reflection detectors **218** to measure reflected beams at different angles in relation to the waveguide combiner **100**.

The one or more reflection detectors **218** may be arranged in any suitable quantity and configuration on the fourth stage **370**. For example, three reflection detectors **218** may be arranged in a linear or crescent-like configuration. The distal reflection detectors may each be oriented at an angle 45 degrees in relation to the central reflection detector around a focal point of the three reflection detectors **218**. Alternatively, in another embodiment, a single reflection detector **218** may be disposed on the fourth stage **370**. The fourth stage **370** may be coupled to a scanning arm, thus enabling the collection of light reflected at different angles by a single reflection detector **218** and eliminating utilization of multiple detectors.

The addition of the fourth stage **370** with one or more reflection detectors **218** coupled thereto enables the metrology system **300** to perform additional types of performance characteristic analyses of the waveguide combiner **100** as compared to the metrology system **200**. For example, the addition of the fourth stage **370** enables the metrology system **300** to measure field of view characteristics, as well as the overall coupling efficiency of the waveguide combiner **100**. In one embodiment, the first stage **240** and the second stage **250** are synchronized to be spatially adjusted simultaneously. Simultaneous adjustment of the spatial position and orientation of the first and second stages **240**, **250** enables the metrology system **300** to also measure angular uniformity and spatial uniformity of the waveguide combiner **100**. In another embodiment, the metrology system is further configured to measure the color uniformity of the waveguide combiner **100**. In yet another embodiment, the metrology system **300** utilizes a light engine as a light source **210** and is configured to measure image resolution and contrast characteristics of the waveguide combiner **100**.

FIGS. **4**A-**4**B illustrate schematic, perspective views of a metrology system **400** according to an embodiment of the disclosure. FIG. **4**A illustrates a perspective view of the waveguide metrology system **400** and FIG. **4**B illustrates a top-down view of the waveguide metrology system **400** with stages **240** and **250** offset from stages **480** and **490** for purposes of clarity. Accordingly, FIGS. **4**A and **4**B are discussed simultaneously in order to facilitate understanding of the disclosure. For reference, x, y, and z axes frames are illustrated in FIG. **4**A, having substantially similar orientations to FIG. **2**A.

The metrology system **400** is similar in configuration to metrology system **300**. However, unlike in metrology system **300**, the third stage **260** and the fourth stage **370** are replaced with a fifth stage **480** and a sixth stage **490**. The fifth stage **480** and the sixth stage **490** are disposed opposite one another, each facing a different planar side of the waveguide combiner **100**. In one embodiment, the fifth stage **480** is disposed adjacent the planar side **111** and the sixth stage **490** is disposed adjacent to planar side **101**.

Further, the fifth stage **480** and sixth stage **490** are linearly adjustable about the x, y, and z axes. For example, the fifth stage **480** and sixth stage **490** may include several guide members extending in the x, y, and z directions upon which the stages may be moved. In another example, the fifth stage **480** and sixth stage **490** may be coupled to adjustable scanning arms configured to linearly move the stages along

the x, y, and z axes. In yet another example, the fifth stage **480** and the sixth stage **490** may be disposed on rolling platforms configured to linearly move along the x, y, and z axes. The linear adjustability of the fifth stage **480** and the sixth stage **490** enables the reflection detectors **218** and the light detectors **212** to measure reflected and transmissive light beams at different vertical and horizontal angles and distances.

The one or more light detectors **212** are disposed on the fifth stage **480**. The light detectors **212** may be arranged in any suitable quantity and configuration on the fifth stage **480**. For example, three light detectors **212** may be arranged in a linear or crescent-like configuration. Further, the distal light detectors may each be positioned at an angle in relation to a central light detector around a focal point of the three light detectors **218**. Alternatively, in another embodiment, a single light detector **212** may be disposed on the fifth stage **480**. The fifth stage **480** may be coupled to a scanning arm, thus enabling the collection of light diffracted at different angles by a single light detector **212** and eliminating utilization of multiple detectors.

Similarly, the one or more reflection detectors **218** are disposed on the sixth stage **490** and may be arranged in any suitable quantity and configuration on the sixth stage **490**. For example, three reflection detectors **218** may be arranged in a linear or crescent-like configuration, the distal reflection detectors each positioned at an angle in relation to a central reflection detector around a focal point of the three reflection detectors **218**. Alternatively, in another embodiment, a single reflection detector **218** may be disposed on the sixth stage **490**. The sixth stage **490** may be coupled to a scanning arm, thus enabling the collection of light reflected at different angles by a single reflection detector **218** and eliminating utilization of multiple detectors.

By utilizing the fifth stage **480** and sixth stage **490** in place of the third stage **260** and fourth stage **370**, the metrology system **400** is capable of performing additional forms of characteristic analyses of the waveguide combiner **100** beyond those of the metrology systems **200**, **300**. For example, by detecting the convergence of the transmission light beams **213** or reflection beams **414** with the light detectors **212** or the reflection detectors **218**, the metrology system **400** can measure the overall optical power of the waveguide combiner **100**. In another example, by moving the fifth stage **480** along the x, y, and z axes and measuring the light beams **213** at multiple positions with the light detectors **212**, the metrology system **400** can measure the spatial uniformity of the waveguide combiner **100** at different angles. In yet another example, by utilizing a collimated light source **210** which produces a collimated incident light beam **209**, the metrology system **400** can measure the entrance and exit pupil size, thus determining pupil replication characteristics of the waveguide combiner **100**.

In summation, an adjustable and flexible metrology system for measuring waveguide combiner performance is described herein. Waveguide combiners have non-uniform properties throughout and utilize multiple diffraction gratings to refract and reflect light beams. The utilization of multiple translation, revolution, and/or rotation stages, as well as multiple light detectors, enables the metrology system to collect data at a wider range of locations and angles. Thus, metrology systems utilizing multiple translation and rotation stages, as well as multiple light detectors, provide for improved waveguide combiner characterization which enables improved quality control in the fabrication of waveguide combiners.

While the foregoing is directed to embodiments of the present disclosure, other and further embodiments of the disclosure may be devised without departing from the basic scope thereof, and the scope thereof is determined by the claims that follow.

What is claimed is:

1. A waveguide metrology system, comprising:

a light source coupled to a first stage and configured to direct light towards a sample waveguide holder disposed on a second stage, the light source disposed on a first side of the second stage;

one or more scanning detectors coupled to a third stage on a second side of the second stage opposite the first side, the one or more scanning detectors configured to collect light transmitted in a first direction from the sample waveguide holder towards the second side;

a reflection detector coupled to a fourth stage on the first side of the second stage, the reflection detector configured to collect light reflected in a second direction from the sample waveguide holder towards the first side; and

a spectrometer in communication with the one or more scanning detectors, wherein the system is configured to measure reflective and transmissive light diffraction efficiency characteristics of a sample waveguide in the sample waveguide holder.

2. The metrology system of claim **1**, wherein the first stage is configured to move linearly about an x, y, or z axis.

3. The metrology system of claim **1**, wherein the first stage is further configured to revolve up to about 180° around the second stage separate from any rotation by the second stage.

4. The metrology system of claim **1**, wherein the second stage is configured to rotate about a vertical axis.

5. The metrology system of claim **1**, further comprising:

a reflection detector disposed on the first stage adjacent to the light source.

6. A waveguide metrology system, comprising:

a light source coupled to a movable first stage and configured to transmit light towards a sample waveguide holder disposed on a second stage, the light source disposed on a first side of the second stage;

one or more scatterometers coupled to a movable third stage on a second side of the second stage opposite the first side, the third stage separately movable from the first stage, the one or more scatterometers configured to collect light transmitted in a first direction from the sample waveguide holder towards the second side;

one or more reflection detectors coupled to a movable fourth stage on the first side of the second stage, the fourth stage separately movable from the first stage and the third stage, the reflection detectors configured to collect light reflected in a second direction of from the sample waveguide holder towards the first side; and

a spectrometer in communication with the one or more scatterometers and the one or more reflection detectors, wherein the system is configured to measure reflective and transmissive light diffraction efficiency characteristics of a sample waveguide in the sample waveguide holder.

7. The metrology system of claim **6**, wherein the first stage is configured to move linearly about an x, y, and z axis.

8. The metrology system of claim **7**, wherein the first stage is further configured to revolve up to about 180° around the sample waveguide holder separate from any rotation by the second stage.

9. The metrology system of claim **6**, wherein the second stage is configured to move linearly about an x, y, and z axis.

10. The metrology system of claim 9, wherein the second stage is further configured to rotate about the z axis.

11. The metrology system of claim 6, wherein the third stage and the fourth stage are configured to revolve up to about 180° around the sample waveguide holder separate from any rotation by the second stage.

12. The metrology system of claim 6, wherein the first stage and the second stage are synchronized to measure angular and spatial uniformity characteristics of a sample waveguide.

13. The metrology system of claim 6, wherein the system is configured to measure field of view and light coupling efficiency characteristics of a sample waveguide.

14. The metrology system of claim 6, wherein the system is configured to measure color uniformity characteristics of a sample waveguide.

15. The metrology system of claim 6, where in the light source is a light engine and the system is configured to measure image resolution and contrast characteristics of a sample waveguide.

16. A waveguide metrology system, comprising:

a collimated light source coupled to a first movable stage;

a sample waveguide holder disposed on a second movable stage;

a reflection detector coupled to a third movable stage on a first side of the sample waveguide holder and configured to collect light reflected in a first direction from the sample waveguide holder;

a transmission detector coupled to a fourth movable stage on a second side of the sample waveguide holder and configured to collect light transmitted in a second direction from the sample waveguide holder, wherein the first stage, the third stage, and the fourth stage are configured to revolve up to about 180° around the sample waveguide holder separate from any rotation by the second stage; and

a spectrometer in communication with the reflection detector and the transmission detector, wherein the system is configured to measure reflective and transmissive light diffraction efficiency characteristics of a sample waveguide in the sample waveguide holder.

17. The metrology system of claim 16, wherein the first stage and the second stage are configured to move linearly about an x, y, and z axis and rotate about the z axis.

18. The metrology system of claim 16, wherein the third stage and the fourth stage are configured to move linearly about an x, y, and z axis.

19. The metrology system of claim 16, wherein the light source comprises a white light source, a laser, or a light emitting diode.

* * * * *