US011226440B2

(12) **United States Patent**
Xu et al.

(10) **Patent No.: US 11,226,440 B2**
(45) **Date of Patent: Jan. 18, 2022**

(54) **MASK ORIENTATION**

(71) Applicant: **Applied Materials, Inc.**, Santa Clara, CA (US)

(72) Inventors: **Yongan Xu**, Santa Clara, CA (US); **Rutger Meyer Timmerman Thijssen**, Sunnyvale, CA (US); **Jinrui Guo**, Santa Clara, CA (US); **Ludovic Godet**, Sunnyvale, CA (US)

(73) Assignee: **Applied Materials, Inc.**, Santa Clara, CA (US)

(*) Notice: Subject to any disclaimer, the term of this patent is extended or adjusted under 35 U.S.C. 154(b) by 101 days.

(21) Appl. No.: **16/735,603**

(22) Filed: **Jan. 6, 2020**

(65) **Prior Publication Data**

US 2021/0208317 A1 Jul. 8, 2021

(51) **Int. Cl.**
G02B 5/18 (2006.01)
G03F 7/20 (2006.01)
G03F 1/42 (2012.01)

(52) **U.S. Cl.**
CPC ***G02B 5/1857*** (2013.01); ***G03F 1/42*** (2013.01); ***G03F 7/201*** (2013.01); *G03F 7/2002* (2013.01)

(58) **Field of Classification Search**
CPC G02B 2027/011; G02B 2027/0123; G02B 2027/0178; G02B 27/0172; G02B 27/4272; G02B 5/1842; G02B 5/1861; G02B 5/1866; G02B 6/0016; G02B 6/0018; G02B 6/0033; G02B 6/0035; G02B 27/0101; G03F 1/42; G03F 7/201; G03F 7/2002
See application file for complete search history.

(56) **References Cited**

U.S. PATENT DOCUMENTS

10,942,430	B2 *	3/2021	Waldern	H04N 13/332
2005/0134820	A1 *	6/2005	Mulder	G03F 7/70566 355/67
2007/0128524	A1	6/2007	Liang et al.	
2010/0035431	A1	2/2010	Wurm et al.	
2012/0026478	A1	2/2012	Chen et al.	
2012/0033306	A1 *	2/2012	Valera	G02B 6/34 359/630

(Continued)

FOREIGN PATENT DOCUMENTS

KR 20150112581 A 10/2015

OTHER PUBLICATIONS

International Search Report & Written Opinion dated Apr. 5, 2021 for PCT/US2020/063782.

Primary Examiner — Deoram Persaud
(74) *Attorney, Agent, or Firm* — Patterson + Sheridan, LLP

(57) **ABSTRACT**

A method of forming patterned features on a substrate is provided. The method includes positioning a plurality of masks arranged in a mask layout over a substrate. The substrate is positioned in a first plane and the plurality of masks are positioned in a second plane, the plurality of masks in the mask layout have edges that each extend parallel to the first plane and parallel or perpendicular to an alignment feature on the substrate, the substrate includes a plurality of areas configured to be patterned by energy directed through the masks arranged in the mask layout. The method further includes directing energy towards the plurality of areas through the plurality of masks arranged in the mask layout over the substrate to form a plurality of patterned features in each of the plurality of areas.

20 Claims, 3 Drawing Sheets

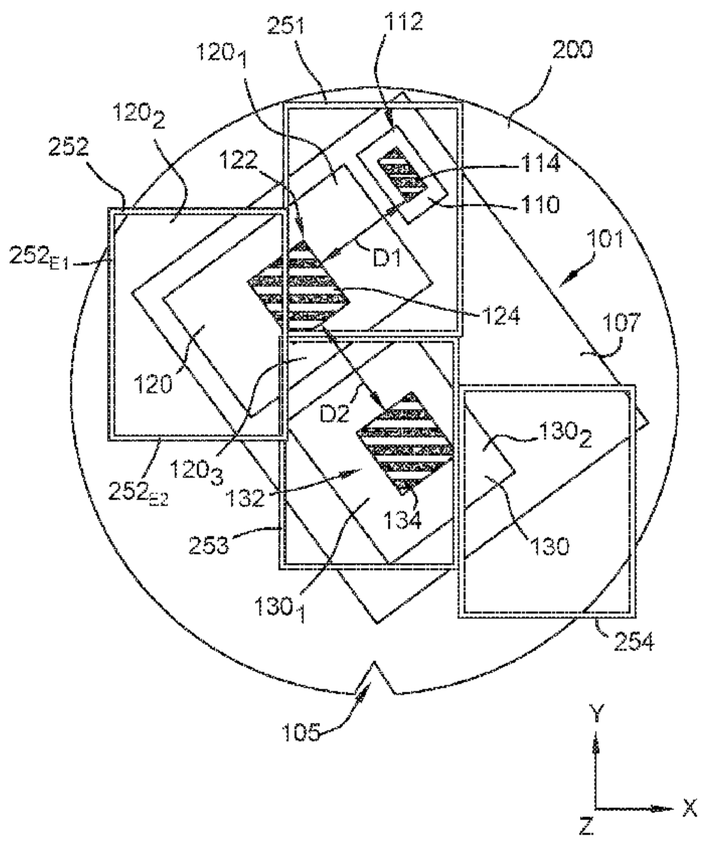

(56) **References Cited**

U.S. PATENT DOCUMENTS

2013/0100431	A1*	4/2013	Kajiyama	G02F 1/133788 355/72
2014/0178803	A1*	6/2014	Yoo	G03F 7/20 430/5
2016/0231568	A1	8/2016	Saarikko et al.	
2019/0121027	A1*	4/2019	Popovich	G02B 27/286
2019/0164899	A1	5/2019	Hu et al.	
2020/0264378	A1*	8/2020	Grant	G02B 6/0016

* cited by examiner

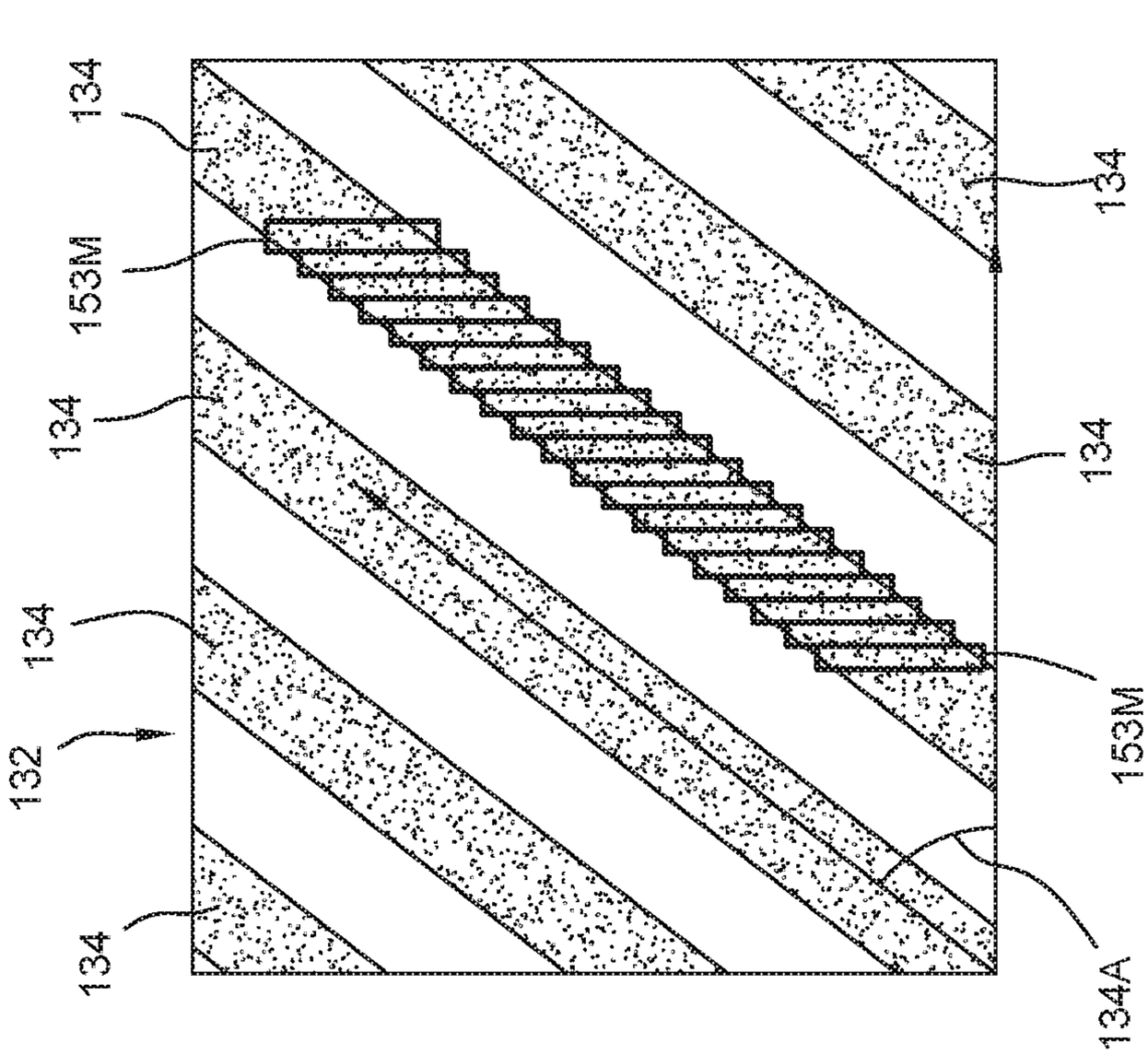

FIG. 1B
(PRIOR ART)

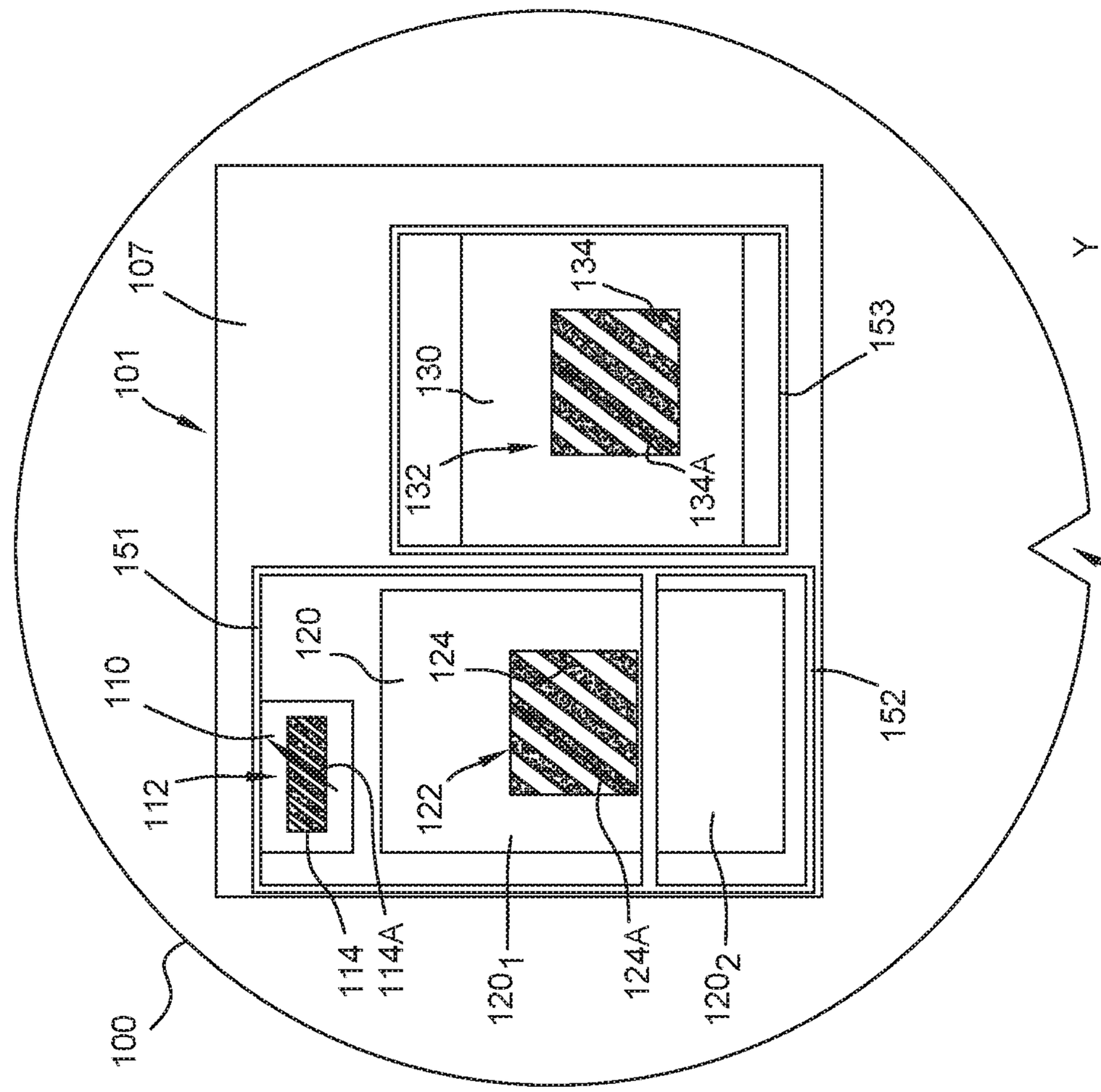

FIG. 1A
(PRIOR ART)

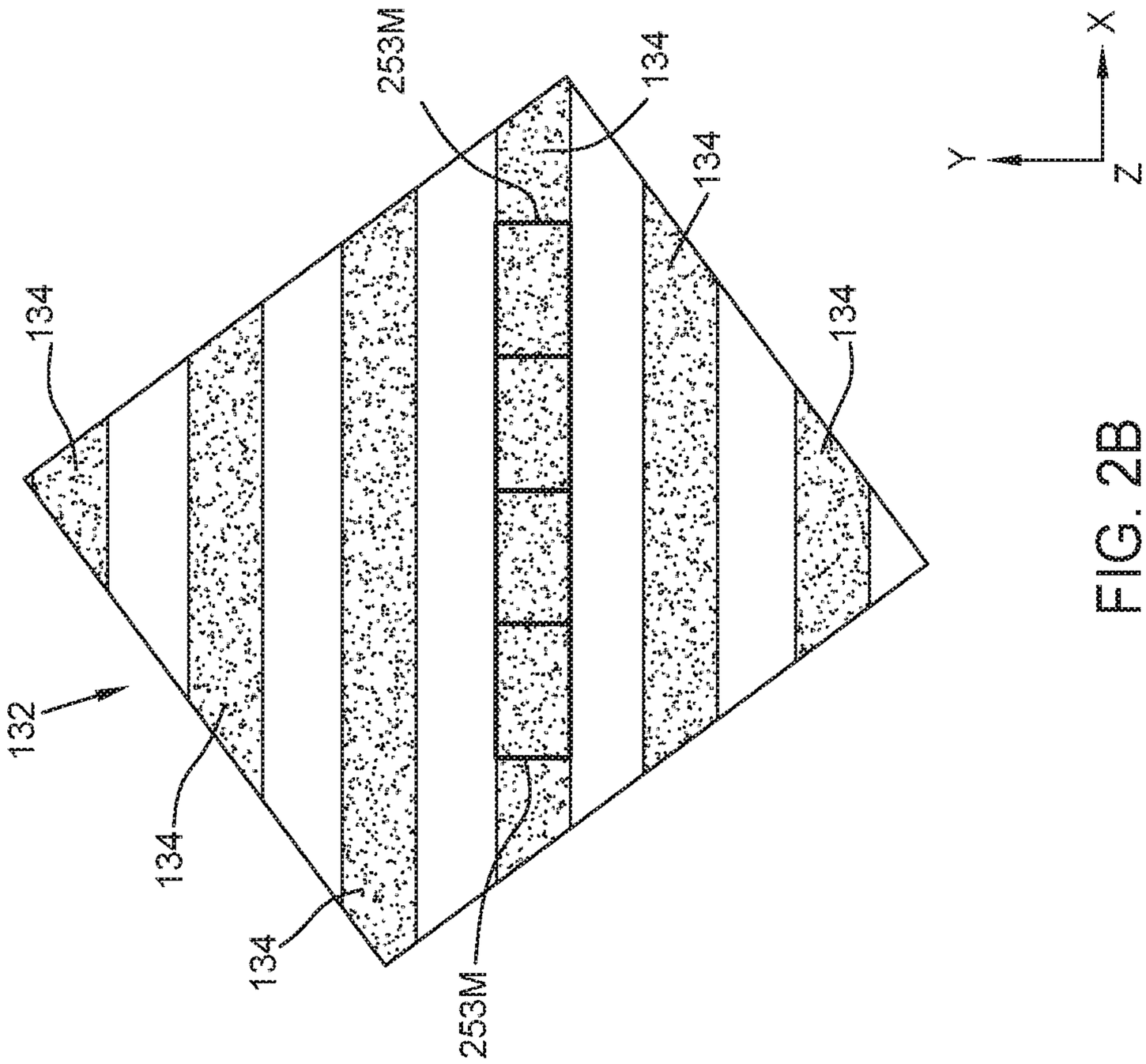
253M
134
134
134
134
134
134
253M
132
X
Y
Z

FIG. 2B

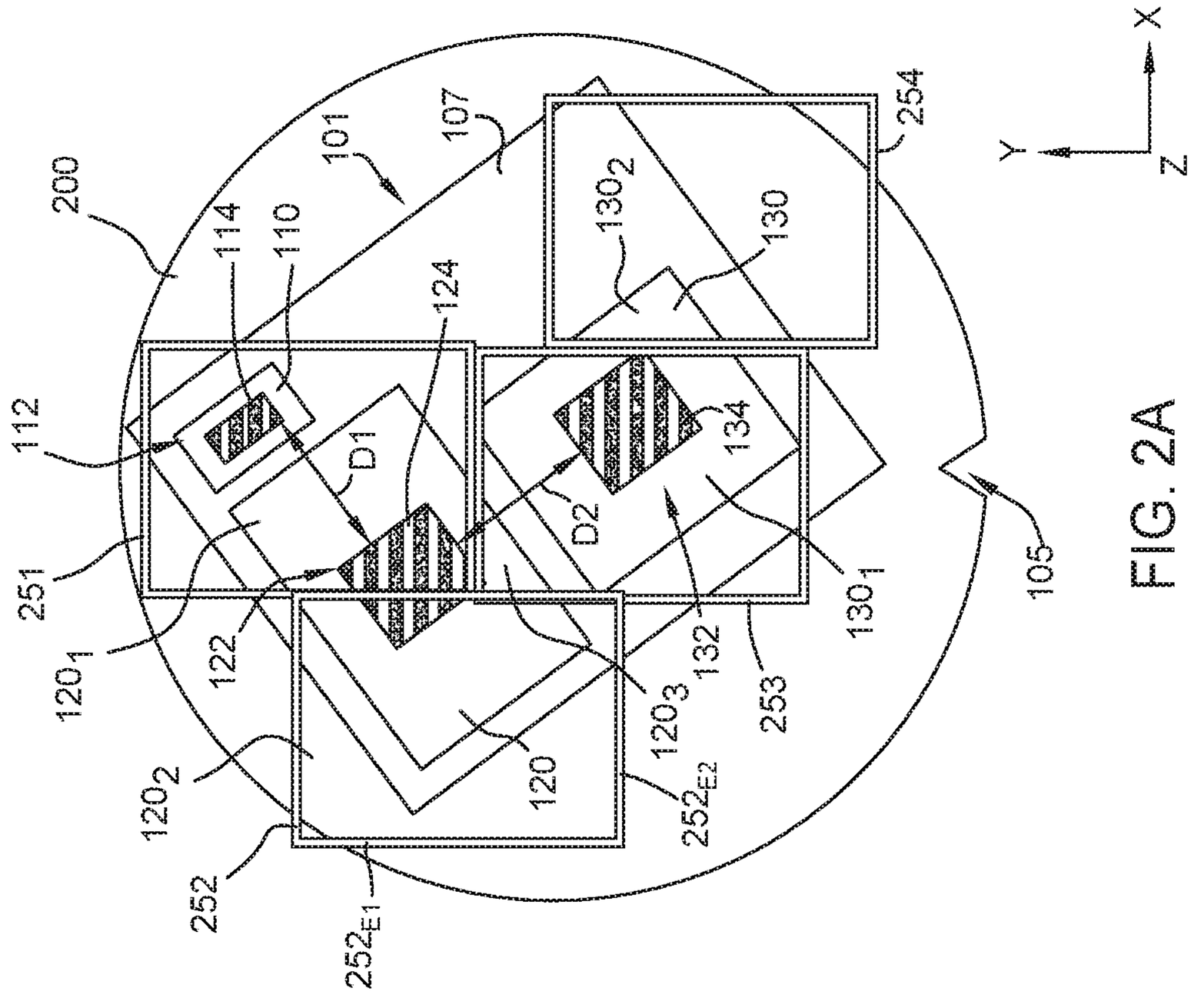
200
114
110
101
107
254
130_2
130
124
112
D1
D2
134
251
120_1
122
120_2
252
252_{E1}
120
120_3
132
253
252_{E2}
130_1
105
X
Y
Z

FIG. 2A

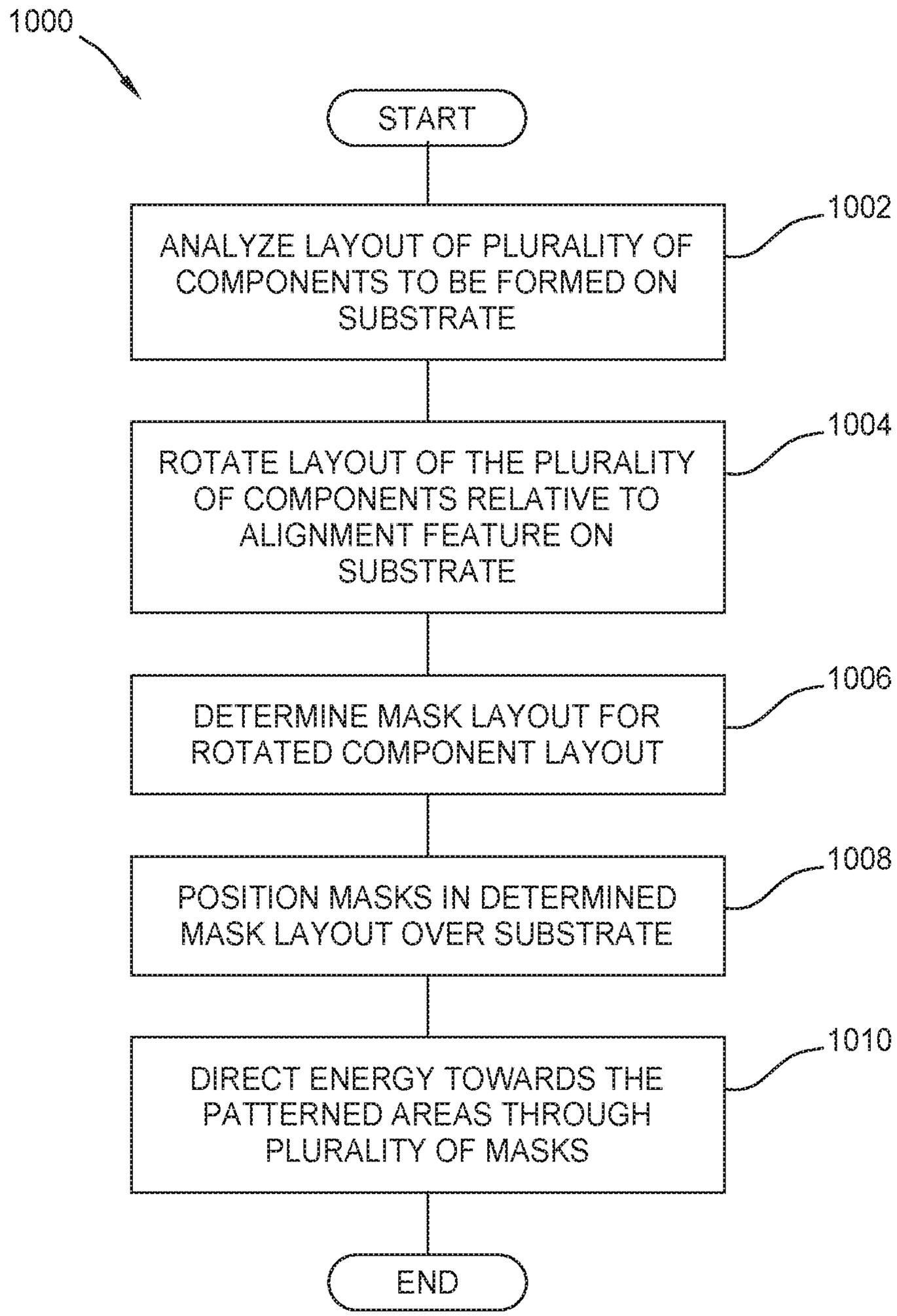
1000
START
ANALYZE LAYOUT OF PLURALITY OF COMPONENTS TO BE FORMED ON SUBSTRATE
1002
ROTATE LAYOUT OF THE PLURALITY OF COMPONENTS RELATIVE TO ALIGNMENT FEATURE ON SUBSTRATE
1004
DETERMINE MASK LAYOUT FOR ROTATED COMPONENT LAYOUT
1006
POSITION MASKS IN DETERMINED MASK LAYOUT OVER SUBSTRATE
1008
DIRECT ENERGY TOWARDS THE PATTERNED AREAS THROUGH PLURALITY OF MASKS
1010
END

FIG. 3

MASK ORIENTATION

BACKGROUND

Field

Embodiments of the present disclosure generally relate to methods of forming patterns in substrates, for example using masks to transfer patterns to substrates.

Description of the Related Art

Transferring patterns to substrates, such as semiconductor substrates, is often accomplished using masks. For example, photolithography can be used to transfer patterns in the masks to a photoresist disposed on the substrate. Because the patterns to be formed on the substrate correspond to the patterns on the mask, the complexity of the patterns to be formed on the substrate directly effect the complexity and thus costs of forming the corresponding masks. Furthermore, increases in the complexity of a mask (e.g., number of features) can cause reductions in throughput when a substrate is being processed with a more complex mask compared to a process being processed with a less complex mask.

Therefore, there is a need for methods and corresponding equipment which can reduce mask complexity and increase throughput for substrate processing.

SUMMARY

Embodiments of the present disclosure generally relate to methods of forming patterns in substrates, for example using masks to transfer patterns to substrates. In one embodiment, a method of forming patterned features on a substrate is provided. The method includes positioning a plurality of masks arranged in a mask layout over a substrate, wherein the substrate is positioned in a first plane and the plurality of masks are positioned in a second plane, the plurality of masks in the mask layout have edges that each extend parallel to the first plane and parallel or perpendicular to an alignment feature on the substrate, the substrate includes a plurality of areas configured to be patterned by energy directed through the masks arranged in the mask layout, the plurality of areas configured to be patterned are spaced apart from each other by one or more areas not configured to be patterned by the energy directed through the masks, and each area of the plurality of areas configured to be patterned is spaced apart from a closest area of the plurality of areas configured to be patterned by a shortest distance along a direction offset by at least 5 degrees from directions in the first plane that extend parallel or perpendicular to the alignment feature on the substrate. The method further includes directing energy towards the plurality of areas through the plurality of masks arranged in the mask layout over the substrate to form a plurality of patterned features in each of the plurality of areas, wherein a number of the formed plurality of patterned features extending along directions in the first plane that are within ±2.5 degrees of being parallel or perpendicular to the alignment feature are greater than a number of the formed plurality of patterned features extending along directions in the first plane that do not align within ±2.5 degrees of being parallel or perpendicular to the alignment feature.

In another embodiment, a method of forming patterned features on a substrate is provided. The method includes positioning a plurality of masks arranged in a mask layout over a substrate that is positioned, wherein the substrate is positioned in a first plane and the plurality of masks are positioned in a second plane, the plurality of masks in the mask layout have edges that each extend parallel to the first plane and parallel or perpendicular to an alignment feature on the substrate, the substrate includes a plurality of areas configured to be patterned by energy directed through the masks arranged in the mask layout, the plurality of areas configured to be patterned are spaced apart from each other by one or more areas not configured to be patterned by the energy directed through the masks, and each area of the plurality of areas configured to be patterned is spaced apart from a closest area of the plurality of areas configured to be patterned by a shortest distance along a direction offset by at least 5 degrees from directions in the first plane that extend parallel or perpendicular to the alignment feature on the substrate. The method further includes directing energy towards the plurality of areas through the plurality of masks arranged in the mask layout over the substrate to form a plurality of patterned features in each of the plurality of areas, wherein a number of the formed plurality of patterned features extending along directions in the first plane that are within ±2.5 degrees of being parallel, perpendicular, ±30 degrees, ±45 degrees, or ±60 degrees relative to the alignment feature are greater than a number of the formed plurality of patterned features extending along directions in the first plane that do not align within ±2.5 degrees of being parallel, perpendicular, ±30 degrees, ±45 degrees, or ±60 degrees relative to the alignment feature.

In another embodiment, a method of forming gratings on a substrate is provided. The method includes positioning a plurality of masks arranged in a mask layout over a substrate that is positioned, wherein the substrate is positioned in a first plane and the plurality of masks are positioned in a second plane, the plurality of masks in the mask layout have edges that each extend parallel to the first plane and parallel or perpendicular to an alignment feature on the substrate, the substrate includes a plurality of areas configured to be patterned by energy directed through the masks arranged in the mask layout, the plurality of areas configured to be patterned are spaced apart from each other by one or more areas not configured to be patterned by the energy directed through the masks, and each area of the plurality of areas configured to be patterned is spaced apart from a closest area of the plurality of areas configured to be patterned by a shortest distance along a direction offset by at least 5 degrees from directions in the first plane that extend parallel or perpendicular to the alignment feature on the substrate. The method further includes directing energy towards the plurality of areas through the plurality of masks arranged in the mask layout over the substrate to form a plurality of gratings in each of the plurality of areas, wherein a number of the formed plurality of gratings extending along directions in the first plane that are within ±2.5 degrees of being parallel or perpendicular to the alignment feature are greater than a number of the formed plurality of gratings extending along directions in the first plane that do not align within ±2.5 degrees of being parallel or perpendicular to the alignment feature.

BRIEF DESCRIPTION OF THE DRAWINGS

So that the manner in which the above recited features of the present disclosure can be understood in detail, a more particular description of the disclosure, briefly summarized above, may be had by reference to embodiments, some of

which are illustrated in the appended drawings. It is to be noted, however, that the appended drawings illustrate only typical embodiments of this disclosure and are therefore not to be considered limiting of its scope, for the disclosure may admit to other equally effective embodiments.

FIG. **1**A is a top view of three masks arranged over a substrate, according to a conventional patterning process.

FIG. **1**B shows an enlarged view of output patterned area of the output coupling region from FIG. **1**A.

FIG. **2**A is a top view of four masks arranged over a substrate, according to one embodiment.

FIG. **2**B shows an enlarged view of the output patterned area of the output coupling region of the substrate from FIG. **2**A.

FIG. **3** is a process flow diagram of a method for forming the patterned features of the respective patterned areas shown in FIG. **2**A, according to one embodiment.

To facilitate understanding, identical reference numerals have been used, where possible, to designate identical elements that are common to the figures. It is contemplated that elements disclosed in one embodiment may be beneficially utilized on other embodiments without specific recitation. The drawings referred to here should not be understood as being drawn to scale unless specifically noted. Also, the drawings are often simplified and details or components omitted for clarity of presentation and explanation. The drawings and discussion serve to explain principles discussed below, where like designations denote like elements.

DETAILED DESCRIPTION

Embodiments of the present disclosure generally relate to methods of forming patterns in substrates, for example using masks to transfer patterns to substrates. Although the following is described in reference to improving methods for forming a waveguide combiner, the improvements from these methods are also applicable to numerous other methods which use masks or reticles to create patterns including but not limited to lithography, such as optical lithography or ultraviolet lithography (e.g., extreme UV lithography) as well as lithography using other portions of the electromagnetic spectrum, such as infrared or X-ray.

FIG. **1**A is a top view of three masks **151-153** arranged over a substrate **100**, according to a conventional patterning process. The substrate **100** includes a waveguide combiner **101**. The waveguide combiner **101** can be used in an augmented reality device (not shown). The waveguide combiner **101** includes an input coupling region **110**, an intermediate coupling region **120**, and an output coupling region **130**. The intermediate coupling region **120** can also be referred to as an exit pupil expansion region. Although not shown, in some embodiments, the functions of the intermediate coupling region **120** and the output coupling region **130** can be designed and located in a same region. The coupling regions **110**, **120**, **130** are used to couple light through the waveguide combiner **101**, so that images can be displayed to the user of the augmented reality device. The coupling regions **110**, **120**, **130** include pattern features to couple light through the waveguide combiner **101**. The patterned features include but are not limited to pillars (e.g., circular pillars and elongated pillars) and gratings (e.g., line/space gratings). These patterned features can be oriented at a variety of angles relative to a reference line in the plane of the substrate on which the patterned features are to be formed. For example, if a substrate is considered to be positioned in an XY plane with a thickness of the substrate extending in the Z-direction, the patterned features can be oriented along any angle from 0 degrees to 90 degrees relative to a reference line in the XY plane. Furthermore, some embodiments may include multiple patterned features oriented along angles different from each other with no particular relationship determining the difference between these angles. The size of the patterned features can also vary. In some embodiments, the size of the patterned features can vary according to the critical dimension of the device being formed, for example from about 10 nm to about 5 um. The gratings include slanted features arranged in patterns across the coupling regions **110**, **120**, **130**.

The input coupling region **110** is configured to receive incoming light and transmit light to the intermediate coupling region **120**. The input coupling region **110** includes an input patterned area **112** including a first plurality of patterned features **114**. In some embodiments, the plurality of patterned features **114** can include a plurality of gratings. The plurality of patterned features **114** can be arranged across the input patterned area **112** to extend in a direction defined by an input coupling region angle **114**A. In some embodiments, the input coupling region **110** can include additional patterned features (not shown) outside of the input patterned area **112**. These additional patterned features can be aligned along one or more angles that are different from the input coupling region angle **114**A.

The intermediate coupling region **120** is configured to receive light from the input coupling region **110** and transmit light to the output coupling region **130**. The intermediate coupling region **120** includes an intermediate patterned area **122** including a plurality of patterned features **124**. In some embodiments, the plurality of patterned features **124** can include a plurality of gratings. The plurality of patterned features **124** can be arranged across the intermediate patterned area **122** to extend in a direction defined by an intermediate coupling region angle **124**A. In some embodiments, the intermediate coupling region **120** can include additional patterned features (not shown) outside of the intermediate patterned area **122**. These additional patterned features can be aligned along one or more angles that are different from the intermediate coupling region angle **124**A.

The output coupling region **130** is configured to receive light from the intermediate coupling region **120** and output images from the output coupling region **130**. The output coupling region **130** includes an output patterned area **132** including a plurality of patterned features **134**. In some embodiments, the plurality of patterned features **134** can include a plurality of gratings. The plurality of patterned features **134** can be arranged across the output patterned area **132** to extend in a direction defined by an output coupling region angle **134**A. In some embodiments, the output coupling region **130** can include additional patterned features (not shown) outside of the output patterned area **132**. These additional patterned features can be aligned along one or more angles that are different from the output coupling region angle **134**A.

Three masks **151-153** can be positioned over the waveguide combiner **101**. A first mask **151** can be positioned over the input coupling region **110** and a first portion $\mathbf{120}_1$ of the intermediate coupling region **120**. A second mask **152** can be positioned over a second portion $\mathbf{120}_2$ of the intermediate coupling region **120**. A third mask **153** can be positioned over the output coupling region **130**.

The waveguide combiner **101** is positioned in a first orientation relative to a notch **105** in the substrate **100**. The notch **105** in the substrate **100** can be used to position the substrate **100** in a first position in which the notch is aligned with the Y-axis. In the first orientation, the input coupling

region **110** is spaced apart from the intermediate coupling region **120** in the Y-direction. Furthermore, the output coupling region **130** is spaced apart from the intermediate coupling region **120** in the X-direction in the first orientation. In some embodiments, the X and Y axis can correspond to axes on equipment used to form the patterned features on the waveguide combiner, such as lithography equipment. The patterns in the masks **151-153** are formed to correspond to the patterned features **114**, **124**, **134** on the respective coupling regions **110**, **120**, **130** when the masks **151-153** are positioned over the coupling regions **110**, **120**, **130** when the substrate **100** is in the first position. Furthermore, the masks **151-153** can also include patterns to form the additional patterned features (not shown) mentioned above that can be located in the coupling regions **110**, **120**, **130**.

FIG. **1**B shows an enlarged view of output patterned area **132** of the output coupling region **130** from FIG. **1**A. FIG. **1**B further shows exemplary electron beam exposure shots **153**M that can be used to fabricate the patterns in the third mask **153** that correspond to the patterned features **134** in the output patterned area **132**. The patterned features **134** are aligned along the output coupling region angle **134**A. The output coupling region angle **134**A is about 37 degrees relative to the Y-axis (i.e., the direction in which the notch **105** points). Equipment used to fabricate masks can operate efficiently along standard angles (e.g., 0 degrees, ±45 degrees, and 90 degrees) as well as relatively standard angles (e.g., ±30 degrees and ±60 degrees). For example, equipment used to fabricate masks can generally use a lower number of larger electron beam exposure shots to form patterns in masks within about ±2.5 degrees of these standard angles and relatively standard angles. Conversely, this same equipment cannot produce patterns in masks with the same efficiency along non-standard angles (i.e., angles at least ±2.5 degrees offset from the standard and relatively standard angles mentioned above). Thus, a higher number of smaller electron beam exposure shots are needed to generate patterns along these non-standard angles.

Because the patterned features **134** are aligned along a non-standard angle of 37 degrees, a higher number of smaller electron beam exposure shots are needed to achieve an acceptable pattern in the third mask **153** that can then be used to form the patterned features **134** within design specifications (e.g., acceptable line edge roughness of the patterned features **134**). When an attempt is made to use a lower number of larger electron beam exposure shots to form patterns in masks along non-standard angles (e.g., 37 degrees), a staircase effect occurs in the newly fabricated mask. This staircase effect in the newly fabricated mask then leads to a corresponding staircase effect in the patterns on the devices formed with the newly fabricated mask. Thus, the higher number of smaller electron beam shots are needed to fabricate the masks with patterns aligned along the non-standard angles, such as 37 degrees. This higher number of smaller electron beam shots can significantly lower throughput for fabricating masks resulting in increased costs. Thus, a solution is needed to avoid the problems associated with forming patterns in masks along the non-standard angles mentioned above.

FIG. **2**A is a top view of four masks **251-254** arranged over a substrate **200**, according to one embodiment. The substrate **200** includes the waveguide combiner **101** described above in reference to FIG. **1**A. The substrate **200** is similar to the substrate **100** (FIG. **1**A) except that the waveguide combiner **101** is positioned in a second orientation relative to the notch **105** when compared to the first orientation of the waveguide combiner **101** relative to the notch **105** as shown in FIG. **1**A. In this second orientation, the patterned features **114**, **124**, **134** of the coupling regions **110**, **120**, **130** are substantially aligned with the X-axis. Used herein, substantially aligned with an axis or angle refers to a feature being aligned within about ±2.5 degrees of the axis or angle.

Positioning the waveguide combiner **101** on the substrate **200** in this second orientation causes the patterned areas **112**, **122**, **132** to be spaced apart from each other in directions that are substantially offset from the X-axis or the Y-axis. Used herein, a direction that is substantially offset from an axis refers to a direction that extends at angle at least 5 degrees offset from that axis. For example, on the substrate **200**, the input patterned area **112** of the input coupling region **110** is spaced apart from intermediate patterned area **122** of the intermediate coupling region **120** by a portion of an unpatterned area **107** in a first direction D**1** in the XY plane that is at least 5 degrees offset from the X-axis and at least 5 degrees offset from the Y-axis. The first direction D**1** can the direction along which there is a shortest distance between the input coupling region **110** and the intermediate coupling region **120**. Similarly, the intermediate patterned area **122** of the intermediate coupling device **120** is spaced apart from the output patterned area **132** of the output coupling region **130** by another portion of the unpatterned area **107** in a second direction D**2** in the XY plane that is at least 5 degrees offset from the X-axis and at least 5 degrees offset from the Y-axis. The second direction D**2** can be the direction along which there is a shortest distance between the intermediate coupling region **120** and the output coupling region **130**. In some embodiments, the first direction D**1** can be perpendicular to the second direction D**2**.

The four masks **251-254** can be positioned over the waveguide combiner **101** of the substrate **200**. A first mask **251** can be positioned over the input coupling region **110** and a first portion **1201** of the intermediate coupling region **120**. A second mask **252** can be positioned over a second portion **1202** of the intermediate coupling region **120**. A third mask **253** can be positioned over a third portion $\mathbf{120}_3$ of the intermediate coupling region **120** and a first portion $\mathbf{130}_1$ of the output coupling region **130**. A fourth mask **254** can be positioned over a second portion $\mathbf{130}_2$ of the output coupling region **130**. In some embodiments, each mask **251-254** can include an edge aligned with the Y-axis (e.g., edge $\mathbf{252}_{E1}$) and an edge aligned with the X-axis (e.g., edge $\mathbf{252}_{E2}$). Furthermore, in some embodiments, each edge of one or more of the masks **251-254**, such as all of the masks **251-254**, is aligned with the either the Y-axis or the X-axis.

FIG. **2**B shows an enlarged view of the output patterned area **132** of the output coupling region **130** of the substrate **200** from FIG. **2**A. FIG. **2**B further shows exemplary electron beam exposure shots **253**M that can be used to fabricate the patterns in the third mask **253** that correspond to the patterned features **134**. The patterned features **134** are substantially aligned with the X-axis. When patterned features are substantially aligned along standard angles (e.g., 0 degrees, ±45 degrees, and 90 degrees) and relatively standard angles (e.g., ±30 degrees and ±60 degrees) a lower number of larger electron beam exposure shots can be used to form patterns in masks. For example, exemplary electron beam exposure shots **253**M of FIG. **2**B aligned along the standard angle of 90 degrees relative to Y-axis and the direction in which the notch **105** points. Thus, the electron beam shots **253**M of FIG. **2**B are substantially larger than the exemplary electron beam exposure shots **153**M of FIG. **1**B, which are aligned along the non-standard angle of 37 degrees. Moreover, the substantially larger electron beam

shots **253**M allow substantially less electron beam shots to be used to form the patterns in the mask **253** relative to the patterns in the mask **153**, which can result in significant reductions in cost. This cost reduction allowed by forming patterns in masks along standard and relatively standard angles can be a cost reduction by a factor of 10 or more compared to forming patterns in masks along non-standard angles (e.g., 37 degrees).

Because the cost reduction of forming patterns in masks along standard and relatively standard angles is so high (e.g., a factor of ten), significant cost savings can still be achieved even when more masks are used. For example, even though FIG. **2**A shows a layout of four masks **251-254** being used and FIG. **1**A shows a layout of three masks **151-153** being used, the layout of the four masks **251-254** still results in a significant cost savings relative to the layout of the three masks **153** because the masks **151-153** shown in FIG. **1**A can each cost significantly more (ten times as much) than the masks **251-254** shown in FIG. **2**A.

FIG. **3** is a process flow diagram of a method **1000** for forming the patterned features **114**, **124**, **134** of the respective patterned areas **112**, **122**, **132** shown in FIG. **2**A, according to one embodiment. The method **1000** is described in reference to FIGS. **1**A, **1**B, **2**A, **2**B, and **3**.

The method **1000** begins at block **1002**, by analyzing an initial layout of a plurality of components to be formed on a substrate relative to an alignment feature on the substrate (e.g., notch **105**). Each of the plurality of components in the layout can include a plurality of patterned features with each of the plurality of components being spaced apart from each other by one or more unpatterned areas **107** as described above.

For example, referring to FIG. **1**A, the orientation of the patterned features **114**, **124**, **134** (plurality of patterned features) of the coupling regions **110**, **120**, **130** (plurality of components) can be analyzed to determine the angle at which these patterned features **114**, **124**, **134** extend in the XY plane relative to the direction in which the notch **105** points in the XY plane. Furthermore, the coupling regions **110**, **120**, **130** (plurality of components) are spaced apart from each other by one or more unpatterned areas **107**. The coupling regions **110**, **120**, **130** are also spaced apart from each other along directions D**1**, D**2** (see FIG. **2**A) in the XY plane which are parallel (Y-direction) and perpendicular (X-direction) to the direction in which the notch **105** points (Y-direction) in the XY plane.

The analysis can determine whether more patterned features in the coupling regions **110**, **120**, **130** (plurality of components) align in the XY plane within about ±2.5 degrees of one or more standard angles (e.g., 0 degrees, ±45 degrees, and 90 degrees) and/or one or more relatively standard angles (e.g., ±30 degrees and ±60 degrees) relative to a direction in which the notch **105** points in the XY plane. For example, referring to FIG. **1**A, the layout of the coupling regions **110**, **120**, **130** can be analyzed to determine that the patterned features **114**, **124**, **134** are oriented at about 37 degrees in the XY plane relative to the direction in which the notch **105** points in the XY plane, which is not within ±2.5 degrees of the one or more standard angles or relatively standard angles.

If the analysis at block **1002** determines that a number of patterned features in the coupling regions **110**, **120**, **130** (plurality of components) that align in the XY plane within about ±2.5 degrees of one or more standard angles (e.g., 0 degrees, ±45 degrees, and 90 degrees) and/or one or more relatively standard angles (e.g., ±30 degrees and ±60 degrees) in the XY plane relative to a direction in which the notch **105** points in the XY plane are greater than the number of patterned features which do not align according to those limits, then the method **1000** can end. On the other hand, as in the case shown in FIG. **1**A, if the analysis at block **1002** determines that a number of patterned features in the coupling regions **110**, **120**, **130** (plurality of components) that do not align in the XY plane within about ±2.5 degrees of one or more standard angles (e.g., 0 degrees, ±45 degrees, and 90 degrees) and/or one or more relatively standard angles (e.g., ±30 degrees and ±60 degrees) in the XY plane relative to a direction in which the notch **105** points in the XY plane are greater than the number of patterned features which do align according to those limits, then the method **1000** continues at block **1004**.

At block **1004**, the layout of the coupling regions **110**, **120**, **130** (plurality of components) is rotated relative to the notch **105**, so that more patterned features in the coupling regions **110**, **120**, **130** (plurality of components) align within about ±2.5 degrees of one or more standard angles (e.g., 0 degrees, ±45 degrees, and 90 degrees) and/or one or more relatively standard angles (e.g., ±30 degrees and ±60 degrees) relative to a direction in which the notch **105** points compared to a number of patterned features that do not align according to those limits. For example, FIG. **2**A provides on example of how the layout of the coupling regions **110**, **120**, **130** (plurality of components) is rotated relative to the notch **105** and the layout of FIG. **1**A. This rotation causes more patterned features in the coupling regions **110**, **120**, **130** (plurality of components) to align within about ±2.5 degrees of the standard angles and relatively standard angles (described above) relative to the direction in which the notch **105** points when compared to a number of patterned features which do not align according to those limits.

The rotation at block **1004** causes each coupling region **110**, **120**, **130** to spaced apart from a closest coupling region **110**, **120**, **130** by a shortest distance along a direction in the XY plane that is substantially offset (i.e., offset by 5 degrees or more) from directions parallel or perpendicular to the direction in which the notch **105** points in the XY plane. For example, as shown in FIG. **2**A, the coupling regions **110**, **120** are spaced apart from each other by a shortest distance along the direction D**1** in the XY plane, which is substantially offset from directions parallel or perpendicular to the direction in which the notch **105** points (Y-direction) in the XY plane. Similarly, the coupling regions **120**, **130** are spaced apart from each other by a shortest distance along the direction D**2** in the XY plane, which is substantially offset from directions parallel or perpendicular to the direction in which the notch **105** points (Y-direction) in the XY plane.

At block **1006**, a mask layout including a plurality of masks is determined for the component layout of the coupling regions **110**, **120**, **130** relative to the notch **105** determined at block **1004**. The mask layout can be determined for rectangular masks having edges that extend parallel and perpendicular to the direction in which the notch points. For example, FIG. **2**A shows a layout of rectangular masks **251-254** to be disposed over the component layout of the coupling regions **110**, **120**, **130** relative to the notch determined at block **1004**. Furthermore, FIG. **2**B shows that the edges (e.g., edges $\mathbf{252}_{E1}$, $\mathbf{252}_{E2}$) of the rectangular masks **251-254** extend parallel and perpendicular to the direction in which the notch **105** points. Although, the individual masks **251-254** are rectangular, the overall shape of the mask layout can be a non-rectangular shape, such as an L-shape or a T-shape. In some embodiments, such as the embodiment shown in FIG. **2**B, the overall shape of the mask layout can be an irregular shape.

At block **1008**, referring to FIG. **2**A, the masks **251-254** are positioned in the mask layout determined at block **1006** over the substrate **200** positioned. The substrate **200** can be described as being positioned in a first XY plane while the masks **251-254** can be described as being positioned in a second XY plane. The first XY plane can be parallel to the second XY plane. The masks **251-254** can each have edges (e.g., edges $\mathbf{252}_{E1}$, $\mathbf{252}_{E2}$) that extend in the second XY plane parallel or perpendicular to the alignment feature (i.e., the notch **105**) on the substrate **200**.

At block **1010**, referring to FIG. **2**A, energy (e.g., visible light or UV energy) is directed through the masks **251-254** positioned in the mask layout over the substrate **200** as described at block **1008** to form the plurality of patterned features including the plurality of patterned features **114**, **124**, **134** in the patterned regions **110**, **120**, **130**. At block **1010**, a number of the formed plurality of patterned features extending along directions in the first XY plane that are within ±2.5 degrees of being parallel, perpendicular, ±30 degrees, ±45 degrees, or ±60 degrees relative to the alignment feature (e.g., notch **105**) are greater than a number of the formed plurality of patterned features extending along directions in the first plane that do not align within ±2.5 degrees of being parallel, perpendicular, ±30 degrees, ±45 degrees, or ±60 degrees relative to the alignment feature. For example, FIG. **2**A shows the plurality of patterned features **114**, **124**, **134** extend perpendicular to the direction in which the notch points. Furthermore, although the coupling regions **110**, **120**, **130** can include other patterned features (not shown) extending in other directions, the number of the plurality of patterned features **114**, **124**, **134** outnumber these other features.

Overall, while at first glance the mask layout shown in FIG. **2**A appears somewhat staggered and random compared to the mask layout shown in FIG. **1**A, the mask layout in FIG. **2**A and related process described in method **1000** can significantly reduce the costs associated with producing patterned features on a substrate, such as forming gratings for a waveguide combiner. Furthermore, even though FIG. **2**A shows four masks being used compared to only three masks being used in FIG. **1**A, the cost of each mask shown in FIG. **2**A can be significantly less, such as ten times less, than the cost of each mask shown in FIG. **1**A, so that the overall cost of the four masks for FIG. **2**A is significantly less than the cost of the masks shown in FIG. **1**A. This reduction in capital costs for the embodiment shown in FIG. **2**A ultimately reduces the costs of devices, such as waveguide combiners, generated through the use these masks.

While the foregoing is directed to embodiments of the present disclosure, other and further embodiments of the disclosure may be devised without departing from the basic scope thereof, and the scope thereof is determined by the claims that follow.

The invention claimed is:

1. A method of forming patterned features on a substrate comprising:

simultaneously positioning a plurality of masks arranged in a mask layout over a substrate, wherein

the substrate is positioned in a first plane and the plurality of masks are positioned in a second plane,

the plurality of masks in the mask layout have edges that each extend parallel to the first plane and parallel or perpendicular to an alignment feature on the substrate,

the substrate includes a plurality of areas configured to be patterned by energy directed through the masks arranged in the mask layout,

the plurality of areas configured to be patterned are spaced apart from each other by one or more areas not configured to be patterned by the energy directed through the masks, and

each area of the plurality of areas configured to be patterned is spaced apart from a closest area of the plurality of areas configured to be patterned by a shortest distance along a direction offset by at least 5 degrees from directions in the first plane that extend parallel or perpendicular to the alignment feature on the substrate; and

directing energy towards the plurality of areas through the plurality of masks arranged in the mask layout over the substrate to form a plurality of patterned features in each of the plurality of areas, wherein

a number of the formed plurality of patterned features extending along directions in the first plane that are within ±2.5 degrees of being parallel or perpendicular to the alignment feature are greater than a number of the formed plurality of patterned features extending along directions in the first plane that do not align within ±2.5 degrees of being parallel or perpendicular to the alignment feature.

2. The method of claim **1**, wherein the energy directed through the masks includes one or more of visible light or ultraviolet energy.

3. The method of claim **1**, wherein the alignment feature is a notch in the substrate.

4. The method of claim **1**, wherein the plurality of masks includes three or more masks.

5. The method of claim **1**, wherein each mask has a rectangular shape.

6. The method of claim **5**, wherein an overall shaped formed by the plurality of masks in the mask layout is non-rectangular.

7. The method of claim **5**, wherein an overall shaped formed by the plurality of masks in the mask layout is an irregular shape.

8. A method of forming patterned features on a substrate comprising:

simultaneously positioning a plurality of masks arranged in a mask layout over a substrate that is positioned, wherein

the substrate is positioned in a first plane and the plurality of masks are positioned in a second plane,

the plurality of masks in the mask layout have edges that each extend parallel to the first plane and parallel or perpendicular to an alignment feature on the substrate,

the substrate includes a plurality of areas configured to be patterned by energy directed through the masks arranged in the mask layout,

the plurality of areas configured to be patterned are spaced apart from each other by one or more areas not configured to be patterned by the energy directed through the masks, and

each area of the plurality of areas configured to be patterned is spaced apart from a closest area of the plurality of areas configured to be patterned by a shortest distance along a direction offset by at least 5 degrees from directions in the first plane that extend parallel, perpendicular, ±30 degrees, ±45 degrees, or ±60 degrees relative to the alignment feature on the substrate; and

directing energy towards the plurality of areas through the plurality of masks arranged in the mask layout over the substrate to form a plurality of patterned features in each of the plurality of areas, wherein

a number of the formed plurality of patterned features extending along directions in the first plane that are within ±2.5 degrees of being parallel, perpendicular, ±30 degrees, ±45 degrees, or ±60 degrees relative to the alignment feature are greater than a number of the formed plurality of patterned features extending along directions in the first plane that do not align within ±2.5 degrees of being parallel, perpendicular, ±30 degrees, ±45 degrees, or ±60 degrees relative to the alignment feature.

9. The method of claim **8**, wherein the energy directed through the masks includes one or more of visible light or ultraviolet energy.

10. The method of claim **8**, wherein the alignment feature is a notch in the substrate.

11. The method of claim **8**, wherein the plurality of masks includes three or more masks.

12. The method of claim **8**, wherein each mask has a rectangular shape.

13. The method of claim **12**, wherein an overall shaped formed by the plurality of masks in the mask layout is non-rectangular.

14. The method of claim **12**, wherein an overall shaped formed by the plurality of masks in the mask layout is an irregular shape.

15. A method of forming gratings on a substrate comprising:

simultaneously positioning a plurality of masks arranged in a mask layout over a substrate that is positioned, wherein

the substrate is positioned in a first plane and the plurality of masks are positioned in a second plane,

the plurality of masks in the mask layout have edges that each extend parallel to the first plane and parallel or perpendicular to an alignment feature on the substrate,

the substrate includes a plurality of areas configured to be patterned by energy directed through the masks arranged in the mask layout,

the plurality of areas configured to be patterned are spaced apart from each other by one or more areas not configured to be patterned by the energy directed through the masks, and

each area of the plurality of areas configured to be patterned is spaced apart from a closest area of the plurality of areas configured to be patterned by a shortest distance along a direction offset by at least 5 degrees from directions in the first plane that extend parallel or perpendicular to the alignment feature on the substrate; and

directing energy towards the plurality of areas through the plurality of masks arranged in the mask layout over the substrate to form a plurality of gratings in each of the plurality of areas, wherein

a number of the formed plurality of gratings extending along directions in the first plane that are within ±2.5 degrees of being parallel or perpendicular to the alignment feature are greater than a number of the formed plurality of gratings extending along directions in the first plane that do not align within ±2.5 degrees of being parallel or perpendicular to the alignment feature.

16. The method of claim **15**, wherein the plurality of areas includes an input coupling region, an intermediate coupling region, and an output coupling region.

17. The method of claim **16**, wherein

the intermediate coupling region is a closest area to the input coupling region, and

a shortest distance between the intermediate coupling region and the input coupling region extends along a first direction.

18. The method of claim **17**, wherein

the intermediate coupling region is a closest area to the output coupling region, and

a shortest distance between the intermediate coupling region and the input coupling region extends along a second direction.

19. The method of claim **18**, wherein the first direction is perpendicular to the second direction.

20. The method of claim **15**, wherein the alignment feature is a notch in the substrate.

* * * * *