US011807008B2

(12) **United States Patent**
Zhang et al.

(10) **Patent No.: US 11,807,008 B2**
(45) **Date of Patent: Nov. 7, 2023**

(54) **MULTIFUNCTIONAL PRINTHEAD SERVICE STATION WITH MULTI-AXIS MOTIONS**

(71) Applicant: **Applied Materials, Inc.**, Santa Clara, CA (US)

(72) Inventors: **Daihua Zhang**, Los Altos, CA (US); **Kang Luo**, Santa Clara, CA (US); **Kazuya Daito**, Milpitas, CA (US); **Kenneth S. Ledford**, San Jose, CA (US); **Elsa Massonneau**, Sunnyvale, CA (US); **Alexey Stepanov**, Sunnyvale, CA (US); **Ludovic Godet**, Sunnyvale, CA (US); **Mahendran Chidambaram**, Saratoga, CA (US); **Visweswaren Sivaramakrishnan**, Cupertino, CA (US); **Bahubali S. Upadhye**, Bangalore (IN); **Hemantha Raju**, Bangalore (IN)

(73) Assignee: **Applied Materials, Inc.**, Santa Clara, CA (US)

(*) Notice: Subject to any disclaimer, the term of this patent is extended or adjusted under 35 U.S.C. 154(b) by 0 days.

(21) Appl. No.: **17/647,780**

(22) Filed: **Jan. 12, 2022**

(65) **Prior Publication Data**

US 2022/0363060 A1 Nov. 17, 2022

(30) **Foreign Application Priority Data**

May 11, 2021 (IN) 202141021236

(51) **Int. Cl.**
B41J 2/165 (2006.01)

(52) **U.S. Cl.**
CPC ***B41J 2/1652*** (2013.01); ***B41J 2/16547*** (2013.01)

(58) **Field of Classification Search**
CPC B41J 2/1652; B41J 2/16547
See application file for complete search history.

(56) **References Cited**

U.S. PATENT DOCUMENTS

5,980,018	A *	11/1999	Taylor	B41J 2/16547 347/31
6,588,876	B2 *	7/2003	Taylor	B41J 2/16547 347/31
9,227,412	B1	1/2016	Liu et al.	
2006/0181567	A1	8/2006	Tezuka	
2016/0229188	A1	8/2016	Kakegawa et al.	
2020/0376834	A1	12/2020	Nakano et al.	

FOREIGN PATENT DOCUMENTS

WO	2020051056	A1	3/2020

OTHER PUBLICATIONS

European Search Report issued to Patent Application No. 22156116.01 dated Jul. 14, 2022.

* cited by examiner

Primary Examiner — Sharon Polk
(74) *Attorney, Agent, or Firm* — PATTERSON & SHERIDAN, LLP

(57) **ABSTRACT**

Embodiments described herein relate to an inkjet service station and methods of servicing an inkjet printer with the inkjet service station. The inkjet service station is disposed in an inkjet printer of an inkjet chamber. The inkjet service station is operable to perform servicing operations on a processing apparatus of the inkjet printer. The servicing operations include at least one of printhead spitting, printhead purging, printhead flushing, printhead cleaning, printhead drying, or vacuum suction.

20 Claims, 5 Drawing Sheets

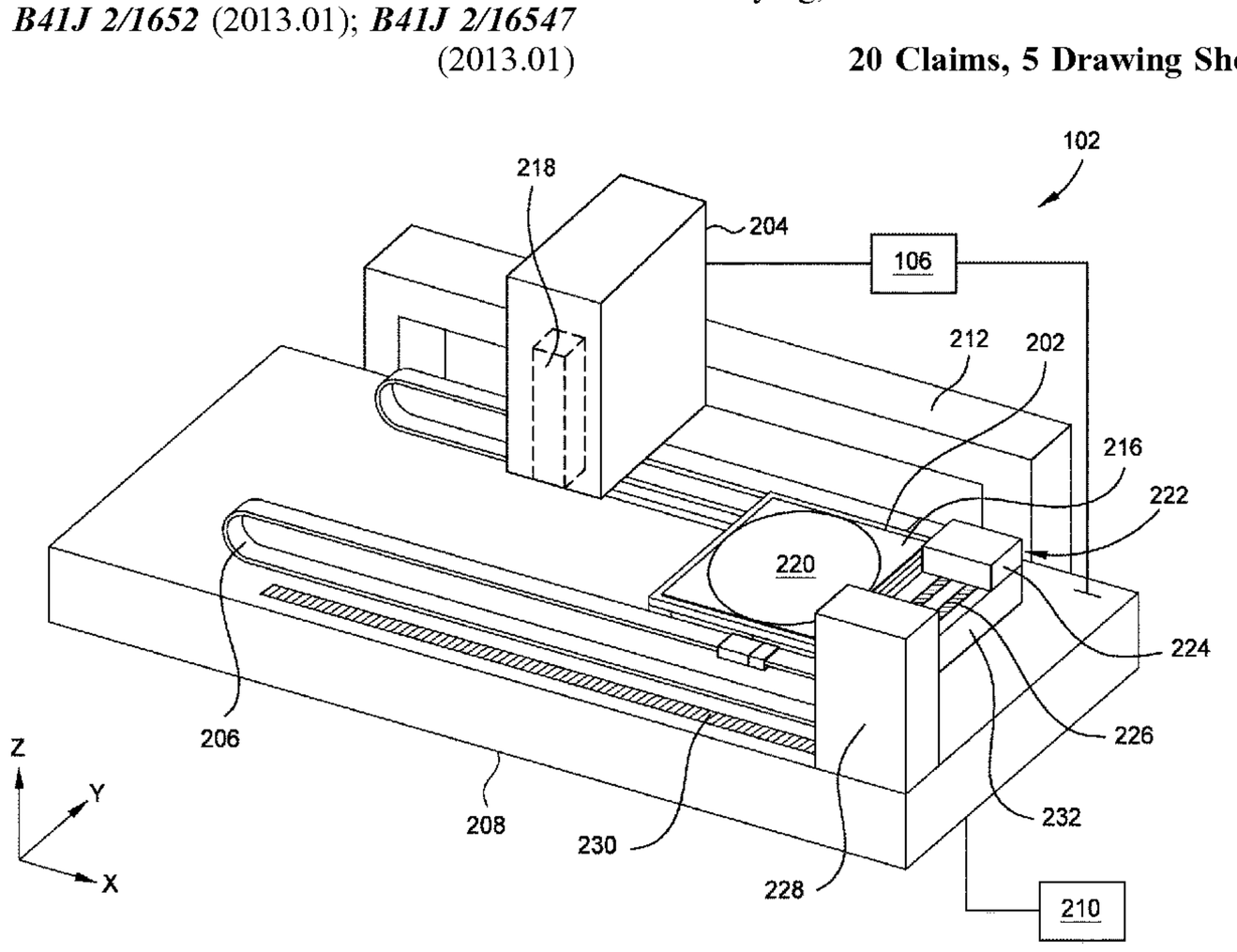

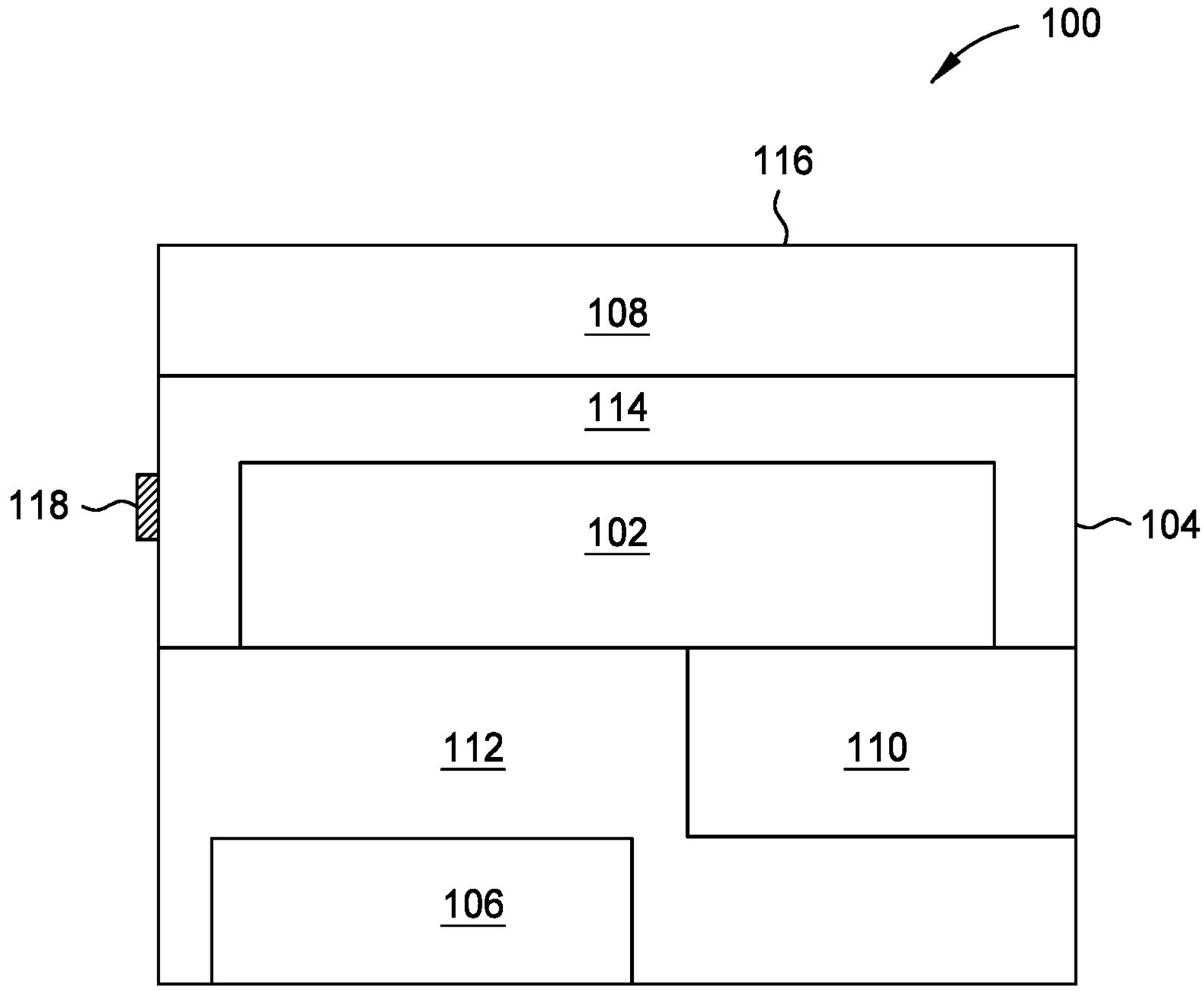

FIG. 1

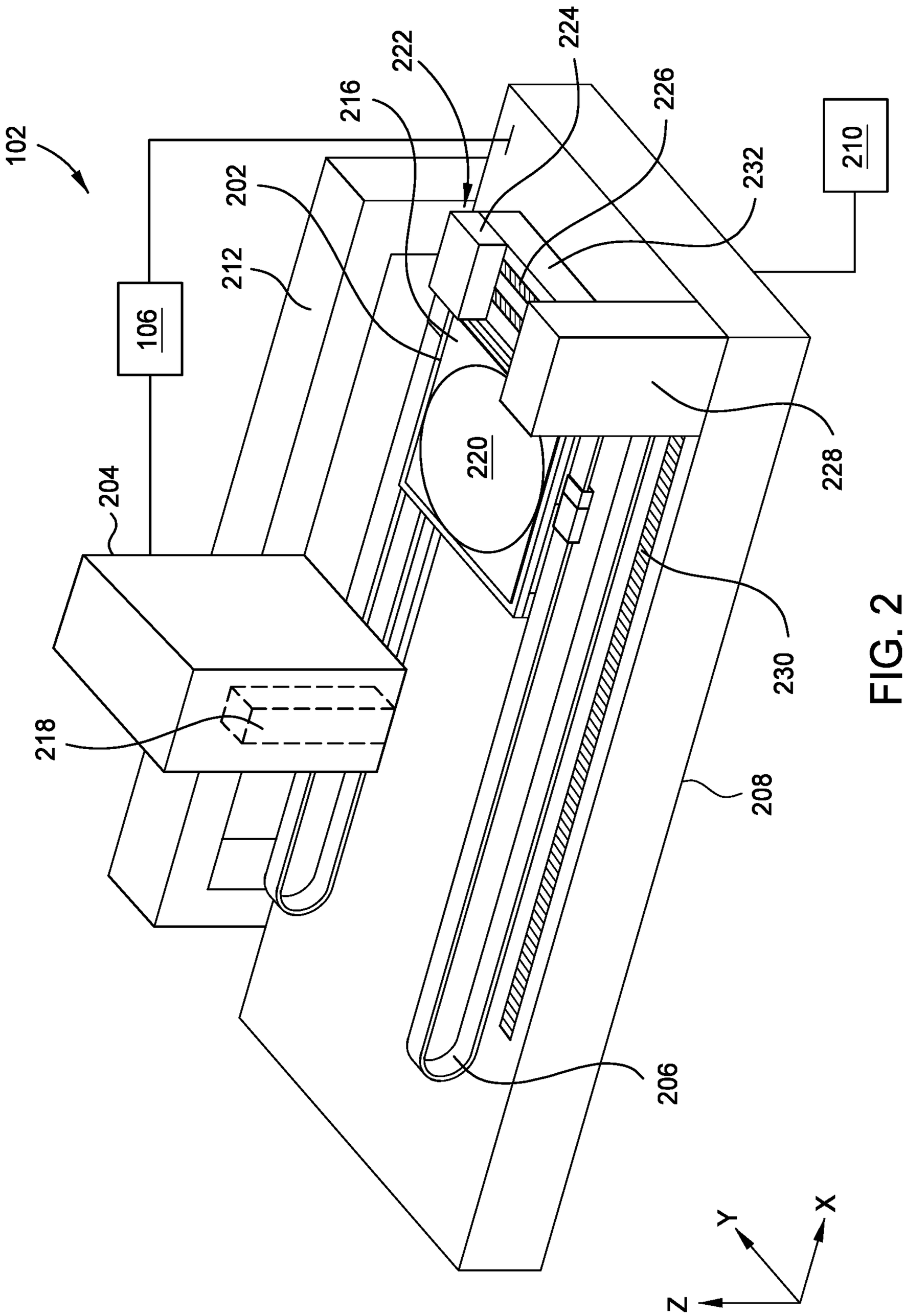
102
106
204
202
212
216
222
224
226
232
210
220
228
230
218
208
206
Y
X
Z

FIG. 2

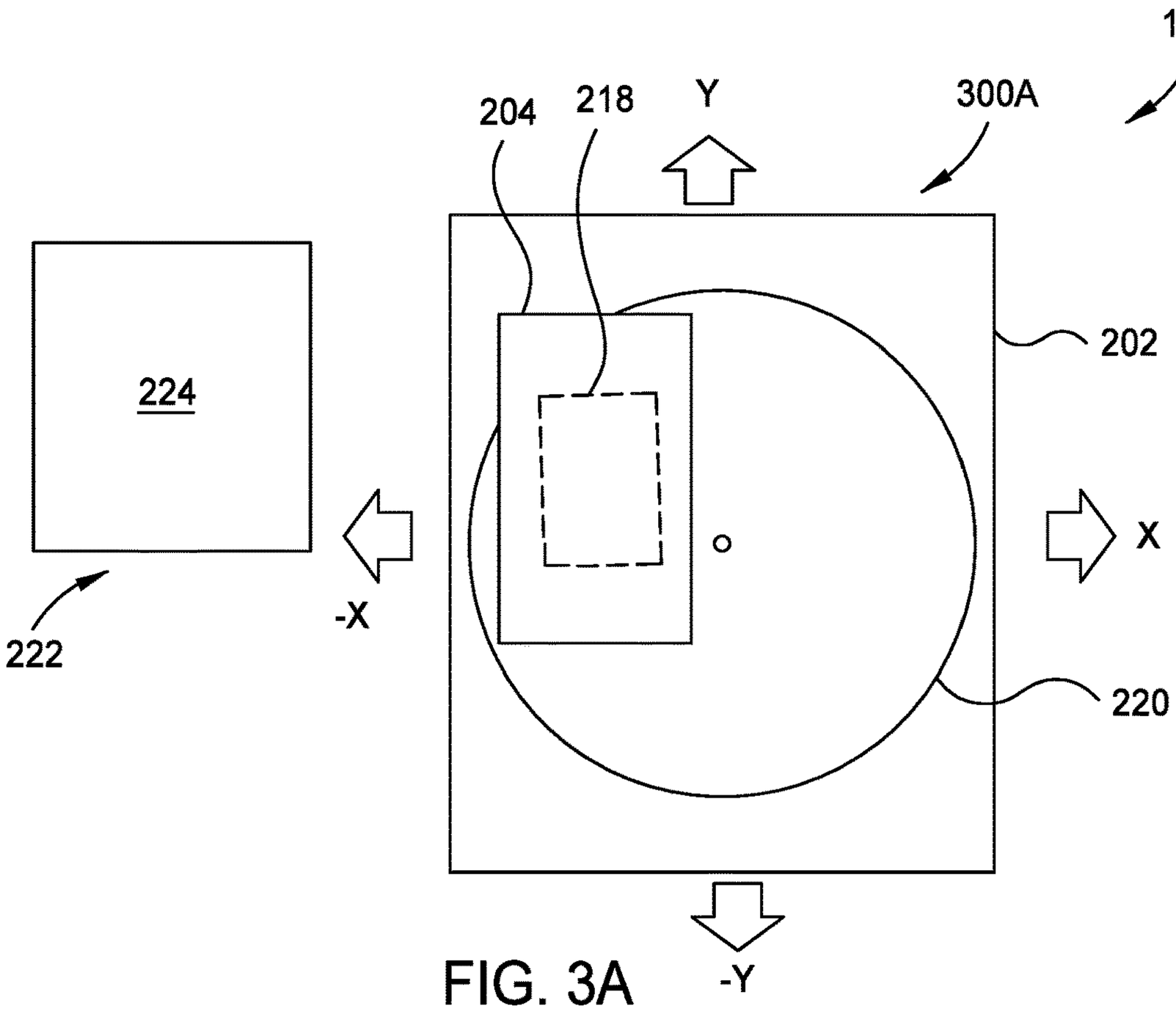
102
300A
204
218
Y
224
202
-X
X
222
220
-Y

FIG. 3A

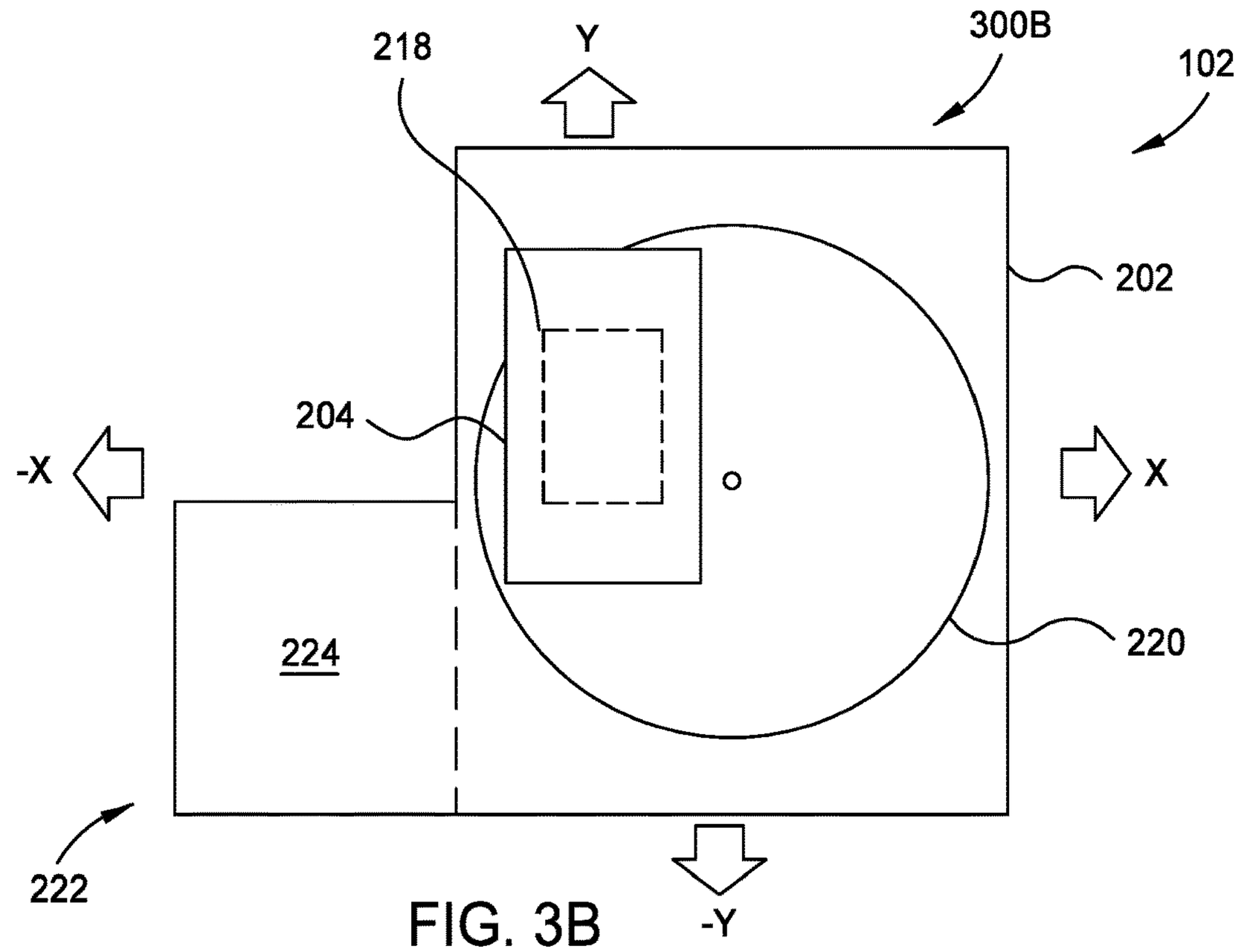
218
Y
300B
102
202
204
-X
X
224
220
222
-Y

FIG. 3B

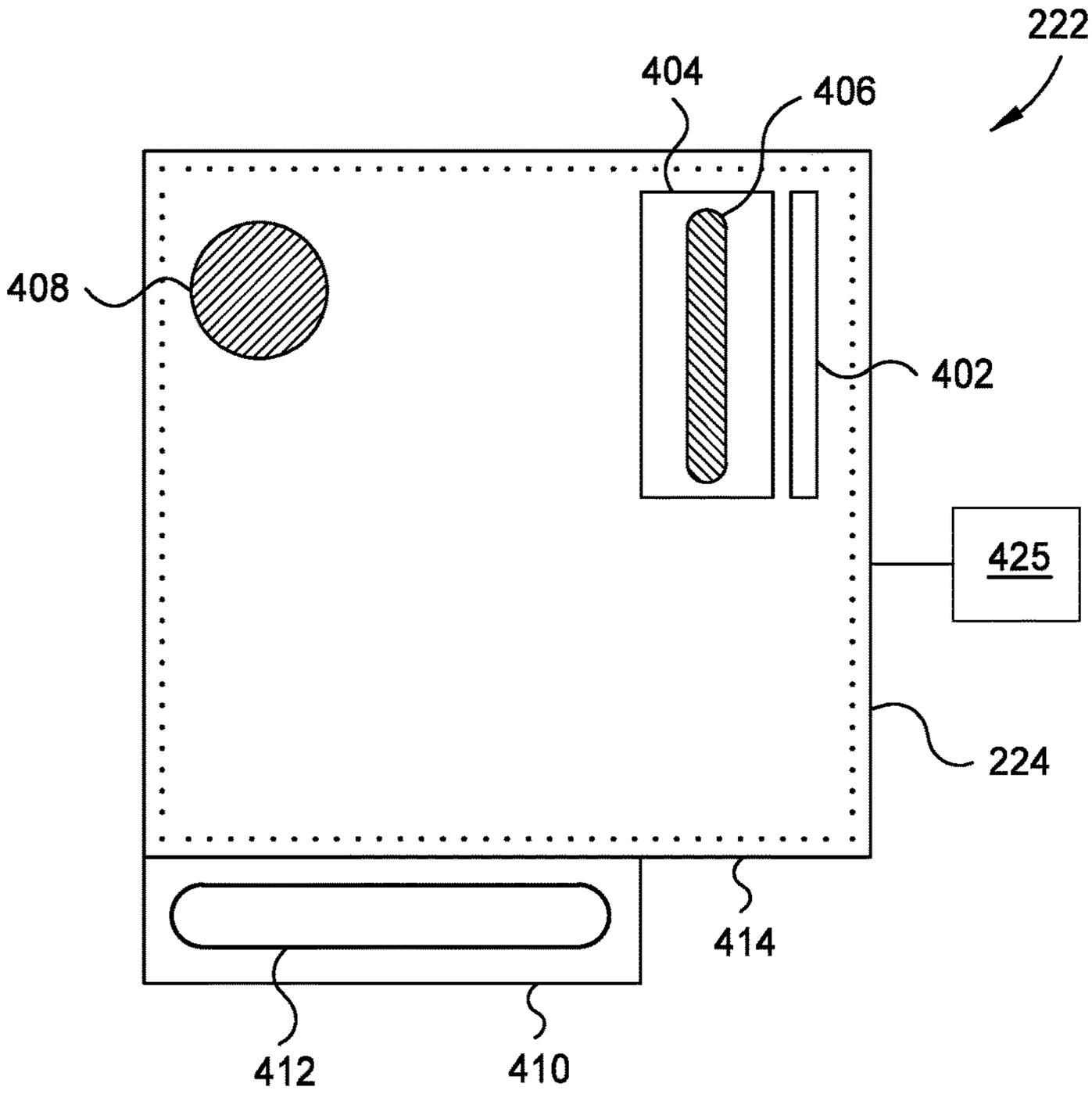
222
404
406
408
402
425
224
414
412
410

FIG. 4A

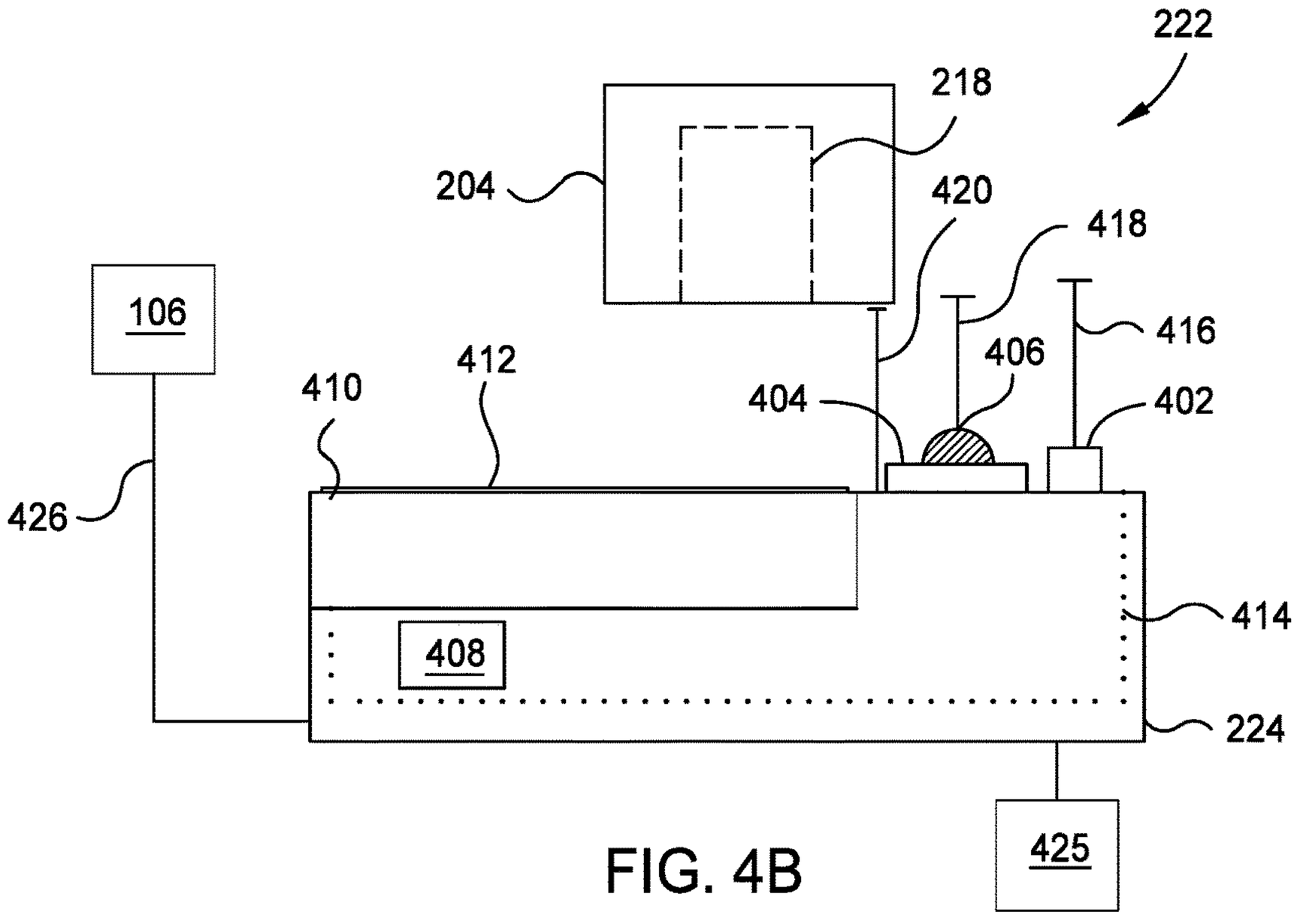
222
218
204
420
418
416
406
404
402
106
412
410
426
414
408
224
425

FIG. 4B

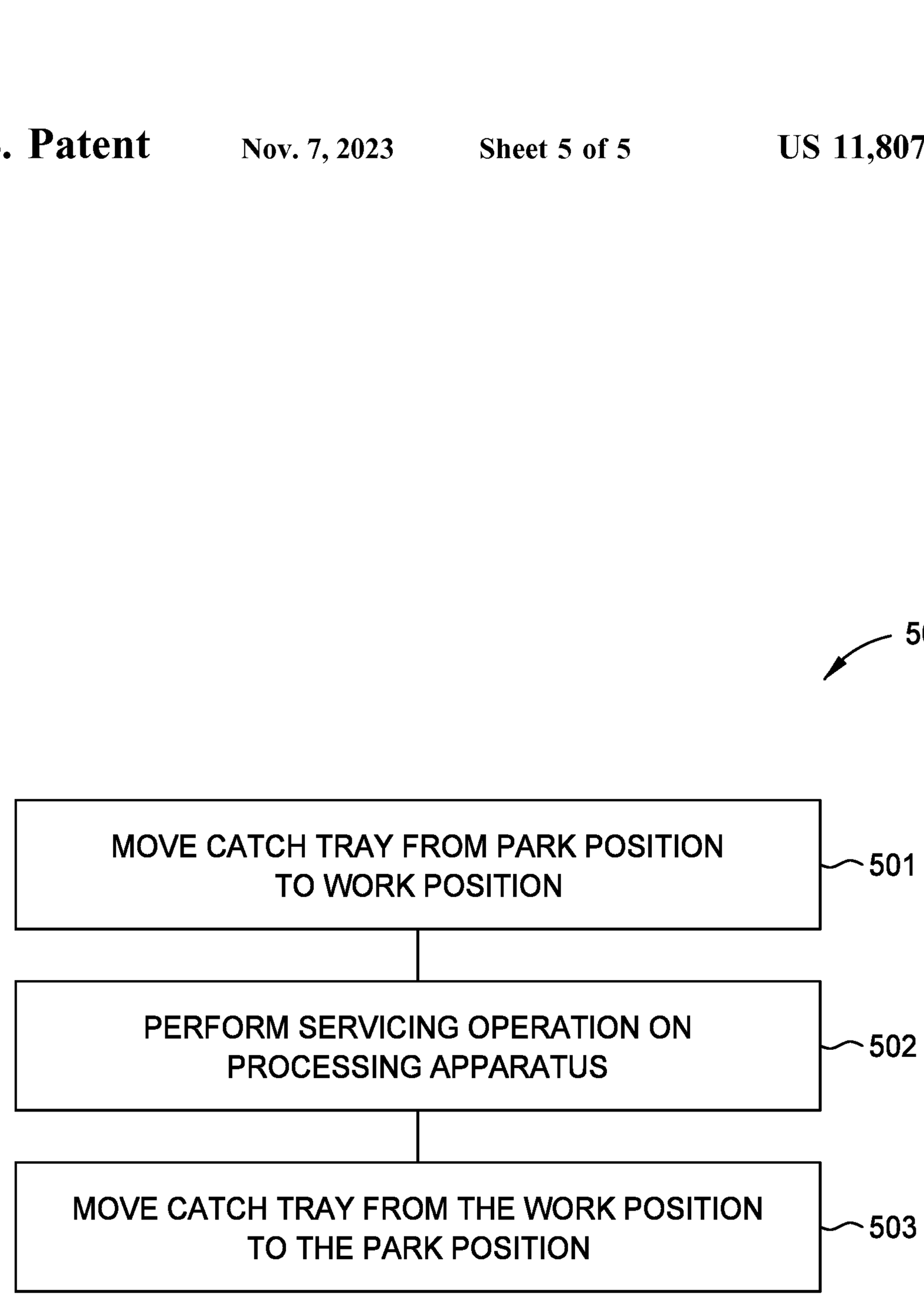
500
MOVE CATCH TRAY FROM PARK POSITION TO WORK POSITION
501
PERFORM SERVICING OPERATION ON PROCESSING APPARATUS
502
MOVE CATCH TRAY FROM THE WORK POSITION TO THE PARK POSITION
503

FIG. 5

MULTIFUNCTIONAL PRINTHEAD SERVICE STATION WITH MULTI-AXIS MOTIONS

CROSS-REFERENCE TO RELATED APPLICATIONS

This application claims the benefit of Indian Provisional Patent Application No. 202141021236, filed May 11, 2021, which is herein incorporated by reference.

BACKGROUND

Field

Embodiments of the present disclosure generally relate to inkjet chambers. More specifically, embodiments described herein provide for an inkjet service station and methods of servicing an inkjet printer with the inkjet service station.

Description of the Related Art

Virtual reality is generally considered to be a computer-generated simulated environment in which a user has an apparent physical presence. A virtual reality experience can be generated in 3D and viewed with a head-mounted display (HMD), such as glasses or other wearable display devices that have near-eye display panels as lenses to display a virtual reality environment that replaces an actual environment.

Augmented reality, however, enables an experience in which a user can still see through the display lenses of the glasses or other HMD device, or handheld device, to view the surrounding environment, yet also see images of virtual objects that are generated in the display and appear as part of the environment. Augmented reality can include any type of input, such as audio and haptic inputs, as well as virtual images, graphics, and video that enhances or augments the environment that the user experiences. As an emerging technology, there are many challenges and design constraints with augmented reality.

One such challenge is fabricating optical films and optical devices. Conventional approaches have attempted to use inkjet printing to address these challenges, however, it is difficult to maintain servicing performance consistency to efficiently perform the inkjet printing processes. Accordingly, what is needed in the art is an inkjet service station.

SUMMARY

In one embodiment, an inkjet service station is provided. The inkjet service station includes a first slide rail, a service stage disposed on the first slide rail, a service stage extension coupled to the service stage, and a second slide rail disposed on the service stage extension. The inkjet service station further includes a catch tray disposed on the second slide rail. The catch tray includes a vacuum knife disposed in the catch tray and a cleaning head disposed in the catch tray. The cleaning head is operable to form a liquid bubble. The catch tray further includes a leak sensor disposed in the catch tray.

In another embodiment, an inkjet chamber is provided. The inkjet chamber includes a fluid supply manifold disposed in a lower region of the inkjet chamber and an inkjet printer disposed in a processing region of the inkjet chamber. The inkjet chamber is in fluid communication with the fluid supply manifold. The inkjet printer includes a moveable stage configured to move along a pair of tracks, a processing apparatus disposed above the moveable stage, and an inkjet service station. The inkjet service station includes a first slide rail, a service stage disposed on the first slide rail, a service stage extension coupled to the service stage, a second slide rail disposed on the service stage extension, and a catch tray disposed on the second slide rail.

In yet another embodiment, a method of performing servicing operations is provided. The method includes positioning a catch tray of a printhead service station under a processing apparatus of an inkjet printer. The catch tray moves in one or both of an x direction and a y direction to be positioned under one or more printheads of the processing apparatus such that the process apparatus remains stationary. The method further includes performing one or more of the servicing operations on the processing apparatus with the catch tray. The servicing operations include one or more of printhead spitting, printhead purging, printhead flushing, printhead cleaning, printhead drying, or vacuum suction operations. The method further includes moving the catch tray in one or both of an x direction and a y direction to be positioned away from the processing apparatus.

BRIEF DESCRIPTION OF THE DRAWINGS

So that the manner in which the above recited features of the present disclosure can be understood in detail, a more particular description of the disclosure, briefly summarized above, may be had by reference to embodiments, some of which are illustrated in the appended drawings. It is to be noted, however, that the appended drawings illustrate only exemplary embodiments and are therefore not to be considered limiting of its scope, and may admit to other equally effective embodiments.

FIG. **1** is a schematic side-view of an inkjet printer according to embodiments.

FIG. **2** is a schematic, perspective view of an inkjet chamber according to embodiments.

FIG. **3**A is a schematic, top view of a first configuration of an inkjet printer according to embodiments.

FIG. **3**B is a schematic, top view of a second configuration of an inkjet printer according to embodiments.

FIG. **4**A is a schematic, top view of a catch tray according to embodiments.

FIG. **4**B is a schematic, side view of a catch tray according to embodiments.

FIG. **5** is a flow diagram of a method for performing service operations with an inkjet service station according to embodiments.

To facilitate understanding, identical reference numerals have been used, where possible, to designate identical elements that are common to the figures. It is contemplated that elements and features of one embodiment may be beneficially incorporated in other embodiments without further recitation.

DETAILED DESCRIPTION

Embodiments of the present disclosure generally relate to inkjet chambers. More specifically, embodiments described herein provide for an inkjet service station and methods of servicing an inkjet printer with the inkjet service station. The inkjet printer includes the inkjet service station. The inkjet printing platform may be utilized for fabrication of optical devices, displays, solar panel, among other applications.

In one embodiment, an inkjet chamber is provided. The inkjet chamber includes a fluid supply manifold disposed in a lower region of the inkjet chamber and an inkjet printer disposed in a processing region of the inkjet chamber. The

inkjet chamber is in fluid communication with the fluid supply manifold. The inkjet printer includes a moveable stage configured to move along a pair of tracks, a processing apparatus disposed above the moveable stage, and an inkjet service station. The inkjet service station includes a first slide rail, a service stage disposed on the first slide rail, a service stage extension coupled to the service stage, a second slide rail disposed on the service stage extension, and a catch tray disposed on the second slide rail.

In another embodiment, a method of performing servicing operations is provided. The method includes positioning a catch tray of a printhead service station under a processing apparatus of an inkjet printer. The catch tray moves in one or both of an x direction and a y direction to be positioned under one or more printheads of the processing apparatus such that the process apparatus remains stationary. The method further includes performing one or more of the servicing operations on the processing apparatus with the catch tray. The servicing operations include one or more of printhead spitting, printhead purging, printhead flushing, printhead cleaning, printhead drying, or vacuum suction operations. The method further includes moving the catch tray in one or both of an x direction and a y direction to be positioned away from the processing apparatus.

FIG. **1** is a schematic, side-view of an inkjet chamber **100**. The inkjet chamber **100** is operable to facilitate inkjet printing processes on a substrate **220** (shown in FIG. **2**). For example, an optical device substrate may be positioned in the inkjet chamber **100**. An inkjet printing process may be performed on the optical device substrate. The inkjet printing process enables selective coating of the substrate with an inkjet material to avoid contamination in sensitive areas of the substrate. The thickness of the inkjet material on the substrate **220** (shown in FIG. **2**) may also be modulated with the inkjet printing process to form a thickness profile. Additionally, the inkjet printing process minimizes material usage when forming the optical films or the substrates.

The inkjet chamber **100** includes an enclosure **104**. The enclosure **104** encloses an inkjet printer **102**, a fluid supply manifold **106**, a fan filter unit **108**, and an exhaust port **110** within the inkjet chamber **100**. The inkjet printer **102** and the fan filter unit **108** are disposed in a processing region **114** of the inkjet chamber. The inkjet printing process is performed with the inkjet printer **102** within the processing region **114**. The exhaust port **110** and the fluid supply manifold **106** are disposed in a lower region **112** of the inkjet chamber **100**. The lower region **112** is disposed below the processing region **114**. The enclosure **104** includes a slit valve **118** therethrough such that a transfer robot (not shown) may position the substrate **220** (shown in FIG. **2**) in the processing region **114**.

In some embodiments, which can be combined with other embodiments described herein, the inkjet chamber **100** may include a heat source, such as lamps or infrared generating radiant heaters, adapted to heat the substrate **220** (shown in FIG. **2**) to a desired temperature. In another embodiment, which can be combined with other embodiments described herein, the inkjet chamber **100** can further be pressurized under a vacuum condition to ensure that any undesirable water or other contamination is removed from the surface of the substrate **220** (shown in FIG. **2**) prior to processing.

The fluid supply manifold **106** is disposed in the lower region **112**. The fluid supply manifold **106** may include service fluids utilized for service operations of the inkjet chamber **100**. The service fluids include, but are not limited to, water, such as deionized water, isopropyl alcohol, propylene glycol methyl ether acetate (PGMEA), or combinations thereof. The fluid supply manifold **106** may also include material sources, such as inkjet materials, utilized in the inkjet printing process. The inkjet materials include, but are not limited to, acrylate, oil, water, or solvent based formulations, or combinations thereof. The fluid supply manifold **106** may be fluidly coupled to the inkjet printer **102**.

The exhaust port **110** is disposed in the lower region **112**. The exhaust port **110** is fluidly coupled to the processing region **114**. The exhaust port **110** is operable to remove contaminants from the processing region **114** produced during processing. In one embodiment, which can be combined with other embodiments described herein, contaminants such as volatile organic compounds (VOCs) generated by the inkjet material or maintenance materials are removed via the exhaust port **110**. The processing region **114** is maintained at a negative pressure (e.g., vacuum) to avoid the contaminants leaking outside of the inkjet chamber **100**.

The fan filter unit **108** is disposed in the processing region **114**. The fan filter unit **108** is coupled to a top surface **116** of the enclosure **104**. The fan filter unit **108** is operable to create a vertical flow of clean, dry air through the processing region **114**. The fan filter unit **108** maintains the processing region **114** at a positive pressure to minimize air and particle intake from outside the inkjet chamber **100**. The fan filter unit **108** and the exhaust port **110** provide independent pressure control in the processing region **114**. The fan filter unit **108** and the exhaust port **110** provide for control of the processing region **114**. The control of the processing region **114** ensures process quality and consistency when processing the substrates.

FIG. **2** is a schematic, perspective view of an inkjet printer **102**. The inkjet printer **102** is disposed in a processing region **114** (shown in FIG. **1**) of an inkjet chamber **100** (shown in FIG. **1**). The inkjet printer **102** includes a stage **202**, a processing apparatus **204**, and an inkjet service station **222**. The stage **202** is supported by a pair of tracks **206** disposed on a slab **208**.

A substrate **220** is supported by the stage **202**. The inkjet printer **102** is operable to perform an inkjet printing process to print a film. For example, the inkjet printer **102** is operable to perform an inkjet printing process to form an optical film and/or an optical device. In one embodiment, which can be combined with other embodiments described herein, the substrate **220** is an optical device substrate. The substrate **220** is any suitable substrate on which an optical device or optical device film may be formed. The inkjet printing process performed in the inkjet printer **102** assists in the fabrication of at least one optical device or an optical film. It is to be understood that the at least one optical device described herein is an exemplary optical device and other optical devices may be used with or modified to accomplish aspects of the present disclosure. In one embodiment, which can be combined with other embodiments described herein, the optical device is a waveguide combiner. The waveguide combiner may be utilized for virtual, augmented, or mixed reality. In another embodiment, which can be combined with other embodiments described herein, the optical device is a micro-lens array. In another embodiment, which can be combined with other embodiments described herein, the optical device is utilized for prescription glasses. In yet another embodiment, which can be combined with other embodiments described herein, the optical device is a flat optical device, such as a metasurface.

The stage **202** moves along the pair of tracks **206** in at least one of an x direction, a y direction, or a z direction, as indicated by the coordinate system shown in FIG. **2**. In one

embodiment, the pair of tracks **206** is a pair of parallel magnetic channels. As shown, each track **206** of the pair of tracks **206** is linear. In other embodiments, which can be combined with other embodiments described herein, the pair of tracks **206** may have a non-linear shape. In one embodiment, which can be combined with other embodiments described herein, an encoder is coupled to the stage **202** in order to provide information of the location of the stage **202** to a controller **210**. The controller **210** is generally designed to facilitate the control and automation of the inkjet printing process described herein. The controller **210** may be coupled to or in communication with the processing apparatus **204**, the stage **202**, and the encoder.

The processing apparatus **204** is coupled to a support **212**. The processing apparatus **204** is disposed over the pair of tracks **206**. The pair of tracks **206** and the stage **202** are operable to pass under the processing apparatus **204**. The processing apparatus **204** is supported over the slab **208** by the support **212**. The processing apparatus **204** is operable to distribute one or more inkjet materials onto the substrate **220**. The substrate **220** is positioned on the stage **202** via a transfer robot (not shown).

The stage **202** may include a chucking device **216** to retain the substrate **220**. In one embodiment, which can be combined with other embodiments described herein, the chucking device **216** is elevated from the surface of the stage **202**. In another embodiment, the chucking device **216** is a vacuum chuck. The chucking device **216** retains the substrate **220** while minimizing contact to a backside surface of the substrate **220** and contamination of the substrate **220**. The chucking device **216** is operable to retain the substrate **220** such that a backside surface of the substrate **220** is facing upwards. Thus, the inkjet printer **102** allows for double-side processing of the substrate **220**. The capability of double-side processing allows the inkjet printer **102** to perform the inkjet printing process on both surfaces of the substrate **220**, which largely expands the design space and functionality of the substrate.

The processing apparatus **204** is operable to distribute one or more inkjet materials onto the substrate **220**. The processing apparatus **204** includes one or more printheads **218** disposed therein. A fluid supply manifold **106** (shown in FIG. **1**) may include a plurality of inkjet material sources. Each inkjet material source is fluidly coupled to one of the plurality of printheads **218**. The one or more printheads **218** are operable to deposit inkjet materials from the fluid supply manifold **106** to the substrate **220**. Although FIG. **2** only shows one printhead **218**, the processing apparatus **204** is not limited in the number of printheads **218** in the processing apparatus **204**. In one embodiment, which can be combined with other embodiments described herein, the one or more printheads **218** are operable to deposit one or more inkjet materials.

The inkjet service station **222** is disposed on the slab **208**. The inkjet service station **222** is operable to provide servicing operations to the inkjet printer **102**. The inkjet service station **222** includes a catch tray **224**, a first slide rail **230**, a second slide rail **226**, a service stage **228**, and a service stage extension **232**. The catch tray **224** is coupled to the service stage **228** via the service stage extension **232**. The second slide rail **226** is disposed along the service stage extension **232**. The catch tray **224** is disposed on the second slide rail **226**. The catch tray **224** is operable to move along the second slide rail **226**. The second slide rail **226** provides for the catch tray **224** to move in the y direction. The first slide rail **230** is disposed along the slab **208**. The service stage **228** is disposed on the first slide rail **230**. The service stage **228** is operable to move along the first slide rail **230**. The first slide rail **230** provides for the service stage **228** to move in the x direction (e.g., parallel to tracks **206**). Therefore, the inkjet service station **222** is operable to move the catch tray **224** in one or both of the x direction and the y direction. In one embodiment, which can be combined with other embodiments described herein, the service stage **228** is operable to move the service stage extension **232** and the catch tray **224** in the z direction.

The inkjet service station **222** is also fluidly coupled to the fluid supply manifold **106** (shown in FIG. **1**). The fluid supply manifold **106** is operable to supply service fluids utilized in the servicing operations. The fluid supply manifold **106** is operable to supply the service fluids to the processing apparatus **204** of the inkjet printer **102**.

The catch tray **224** is operable to be positioned below the processing apparatus **204** during servicing operations. Specifically, the catch tray **224** is operable to be positioned below the one or more printheads **218** in the processing apparatus **204**. The catch tray **224** is operable to collect liquids deposited from the one or more printheads **218**. The catch tray **224** is in a work position when disposed under the processing apparatus **204**. The catch tray **224** is in the work position when the catch tray **224** is positioned such that the inkjet service station **222** is operable to perform the servicing operations under the processing apparatus **204**. The catch tray **224** is in a park position when not performing servicing operations. The catch tray **224** is in the park positon when the catch tray **224** is not disposed under the processing apparatus **204**. The catch tray **224** is in the park positon in FIG. **2**.

FIG. **3**A is a schematic, top view of a first configuration **300**A of an inkjet printer **102**. The inkjet printer **102** includes at least a processing apparatus **204**, one or more printheads **218**, a stage **202**, and an inkjet service station **222**. The stage **202** may have a substrate **220** disposed thereon. For example, the stage **202** is operable to retain an optical device substrate via vacuum suction.

In the first configuration **300**A of the inkjet printer **102**, as shown in FIG. **2**, the processing apparatus **204** remains stationary during a servicing operation. The inkjet service station **222** is operable to perform the servicing operations on the processing apparatus **204**. The servicing operations include at least one of printhead spitting, printhead purging, printhead flushing, printhead cleaning, printhead drying, or vacuum suction. During an inkjet printing process, the stage **202** is operable to move the substrate **220** in at least an −x direction, x direction, −y direction, and y direction. The processing apparatus **204** remains stationary during the inkjet printing process. Upon completion or prior to the inkjet printing process, the inkjet service station **222** is operable to independently move in at least an −x direction, x direction, −y direction, and y direction to move into a work position. Specifically, a catch tray **224** moves in at least an −x direction, x direction, −y direction, and y direction to move into a work position. Maintaining the processing apparatus **204** stationary in both the inkjet printing process and the servicing operations may eliminate movement of the one or more printheads **218**, cables disposed in the processing apparatus **204**, and inkjet materials. Therefore, process stability, printing consistency, and system robustness are improved.

FIG. **3**B is a schematic, top view of a second configuration **300**B of an inkjet printer **102**. The inkjet printer **102** includes at least a processing apparatus **204**, one or more printheads **218**, a stage **202**, and a service station **222**. The stage **202**

may have a substrate **220** disposed thereon. For example, the stage **202** is operable to retain an optical device substrate, e.g., via vacuum suction.

In the second configuration **300**B of the inkjet printer **102**, the processing apparatus **204** remains stationary during a servicing operation. The inkjet service station **222** is operable to perform the servicing operations on the processing apparatus **204**. The servicing operations include at least one of printhead spitting, printhead purging, printhead flushing, printhead cleaning, printhead drying, or vacuum suction. During an inkjet printing process, the stage **202** is operable to move the substrate **220** in at least an −x direction, x direction, −y direction, and y direction. The processing apparatus **204** remains stationary during the inkjet printing process. The inkjet service station **222** is coupled to the stage **202**. Upon completion or prior to the inkjet printing process, the inkjet service station **222**, including a catch tray **224**, and the stage **202** move in at least an −x direction, x direction, −y direction, and y direction to move into a work position. Maintaining the processing apparatus **204** stationary in both the inkjet printing process and the servicing operations may eliminate movement of the one or more printheads **218**, cables disposed in the processing apparatus **204**, and the inkjet material. Therefore, process stability, printing consistency, and system robustness are improved.

FIG. **4**A is a schematic, top view of a catch tray **224**. FIG. **4**B is a schematic, side view of a catch tray **224**. The catch tray **224** is included in an inkjet service station **222** (shown in FIG. **2**). The catch tray **224** includes a vacuum knife **402**, a cleaning head **404**, a liquid bubble **406**, and a leak sensor **408**. The catch tray **224** is operable to be positioned in a work position under a processing apparatus **204** of an inkjet printer **102** (shown in FIG. **2**). The catch tray **224** assists in performing servicing operations on the processing apparatus **204** and one or more printheads **218** disposed in the processing apparatus **204**.

The catch tray **224** is operable to collect liquids disposed from the one or more printheads **218** (shown in FIG. **2**). The cleaning head **404** is disposed in the catch tray **224**. The cleaning head **404** supports the liquid bubble **406** thereon. The cleaning head **404** receives service fluids from a fluid supply manifold **106** (shown in FIG. **1**) to be utilized in the servicing operations. The catch tray **224** is further operable to collect overflow service fluids ejected from the cleaning head **404**. The liquid bubble **406** is a steady state liquid bubble operable to wet and wipe the one or more printheads **218**. The vacuum knife **402** is operable to dry the one or more printheads **218** after the liquid bubble **406** passes over the one or more printheads **218**.

The leak sensor **408** is disposed at the bottom of the catch tray **224**. The leak sensor **408** is operable to detect overflow in the catch tray **224** of service fluids or inkjet materials. The leak sensor **408** may be in communication with a controller **210** (shown in FIG. **2**). When the leak sensor **408** detects overflow, the leak sensor **408** will alert the controller **210** and trigger a system interlock. The catch tray **224** may be emptied during the system interlock. In one embodiment, the catch tray **224** includes a drain **425**. The service fluids and inkjet materials may be flowed out through the drain **425** for disposal. In another embodiment, the service fluids and inkjet materials may be flowed back to the fluid supply manifold **106** via a recirculation line **426** coupled to the catch tray **224**.

In one embodiment, which can be combined with other embodiments described herein, the catch tray **224** further includes a vacuum cap **410**. The vacuum cap **410** may be coupled to an outside surface **414** of the catch tray **224**. An O-ring **412** is coupled to the vacuum cap **410**. In one embodiment, which can be combined with other embodiments described herein, the O-ring **412** is disposed around the circumference of the vacuum cap **410**. The vacuum cap **410** and the O-ring **412** are operable to provide vacuum suction. For example, the vacuum cap **410** may seal to one or more nozzles on the one or more printheads **218** to extract inkjet materials from the one or more printheads **218** utilizing vacuum force. The vacuum cap **410** removes residual contaminants, such as inkjet materials, from the one or more printheads **218**.

As shown in FIG. **4**B, a knife distance **416** is defined as the distance between the vacuum knife **402** and the one or more printheads **218**. The knife distance **416** is between about 100 μm and about 300 μm. A cleaning head distance **418** is defined as the distance between the cleaning head **404** and the one or more printheads **218**. The cleaning head distance **418** is between about 0.2 mm to about 3 mm. A tray distance **420** is defined as the distance between the catch tray **224** and the one or more printheads **218**. The tray distance **420** is between about 1 mm and about 5 mm.

FIG. **5** is a flow diagram of a method **500** for performing service operations with an inkjet service station **222**. To facilitate explanation, the method **500** will be described with reference to FIG. **1**, FIG. **2**, FIG. **3**A, and FIGS. **4**A and **4**B. However, any configuration of the inkjet printer **102** may be used in conjunction with the method **500**. For example, the second configuration **300**B shown in FIG. **3**B may be utilized in conjunction with the method **500**. The method **500** is operable to perform the service operations on a processing apparatus **204** of the inkjet printer **102** disposed in an inkjet chamber **100**.

At operation **501**, a catch tray **224** is moved from a park position to a work position. The catch tray **224** is in the work position when disposed under the processing apparatus **204**. The catch tray **224** is in the work position when the catch tray **224** is positioned such that the inkjet service station **222** is operable to perform the servicing operations under the processing apparatus **204**. The catch tray **224** is coupled to a service stage **228**. The service stage **228** may move in the x direction. The catch tray **224** may move in the y direction. Therefore, the catch tray **224** moves in at least an −x direction, x direction, −y direction, and y direction to move into the work position. The processing apparatus **204** remains stationary. Thus, process stability, printing consistency, and system robustness are improved.

At operation **502**, servicing operations are performed on the processing apparatus. The servicing operations are performed by or assisted by the inkjet service station **222** utilizing the catch tray **224**. The servicing operations include at least one of printhead spitting, printhead purging, printhead flushing, printhead cleaning, printhead drying, or vacuum suction. Performing the servicing operations in a single inkjet service station **222** will improve performance consistency and optimize lifetime of the inkjet printer **102**. The servicing operations will also prevent clogging within the one or more printheads **218**, undesired chemical and physical interactions of inkjet materials in the one or more printheads **218**, uneven pressure distribution of the inkjet materials, and damage to interior components of the one or more printheads **218**. The inkjet service station **222** is not limited in the number of servicing operations that may be performed.

The printhead spitting operation is performed such that the one or more printheads **218** deposit a fixed number of drops of inkjet material during idling of the processing apparatus **204**. In one embodiment, which can be combined

with other embodiments described herein, the frequency of the deposition action during the printhead spitting operation is the same as the frequency of the deposition during the inkjet printing process. In another embodiment, which can be combined with other embodiments described herein, the frequency of the deposition action during the printhead spitting operation is different than the frequency of the deposition during the inkjet printing process. The printhead spitting operation actively prevents inkjet material settlement and inkjet material clogging. The number of ink drops of inkjet material being deposited per printhead **218** and the deposition duration may be adjusted. The deposition frequency during the printhead spitting operation is between once per minute to about once per hour. The catch tray **224** collects the inkjet material deposited from the one or more printheads **218** during the printhead spitting operation.

The printhead purging operation is performed by introducing positive air pressure through the one or more printheads **218**. The positive air pressure pushes the inkjet material out of the one or more printheads **218** to drive away clogging inkjet materials formed along ink delivery channels, manifolds, and cavities. The printhead purging operation may be performed about semi-daily or about daily. The catch tray **224** collects the inkjet material deposited from the one or more printheads **218** during the printhead purging operation.

The printhead flushing operation includes providing a service fluid through the one or more printheads **218** to drive out and replace the inkjet material in the one or more printheads **218**. The catch tray **224** collects the inkjet material and the service fluid deposited from the one or more printheads **218** during the printhead flushing operation. The printhead flushing operation utilizes service fluids provided from a fluid supply manifold **106** disposed in the inkjet chamber **100**. The printhead flushing operation prevents unstable inkjet materials from residing in the one or more printheads **218** for extended periods of time when the inkjet printing process is not performed. The printhead flushing operation also may purge inkjet material clogs by pressurizing the one or more printheads **218**.

The printhead cleaning operation involves the wiping of one or more printheads **218** with a liquid bubble **406** formed from a cleaning head **404** disposed in the catch tray **224**. The liquid bubble **406** utilizes service fluids provided from a fluid supply manifold **106** disposed in the inkjet chamber **100**. The printhead cleaning operation removes contaminants on the one or more printheads **218** and removes contaminants within a shallow depth into the one or more printheads **218**. The catch tray **224** collects the inkjet material and service fluids deposited from the one or more printheads **218** and the liquid bubble **406** during the printhead cleaning operation.

The printhead drying operation removes service fluids or inkjet materials from the one or more printheads **218**. A vacuum knife **402** is disposed proximate the one or more printheads **218** to collect the residual service fluids or inkjet materials. The service fluids and inkjet materials are deposited in the catch tray **224** or may be flowed back to the fluid supply manifold **106** via a recirculation line **426** coupled to the catch tray **224**.

The vacuum suction operation provides a seal around the one or more printheads **218**. A vacuum cap **410** coupled to the catch tray **224** and an O-ring **412** coupled to the vacuum cap **410** may form the seal with the one or more printheads **218**. The vacuum cap **410** extracts inkjet materials and other contaminants from the one or more printheads **218**. The vacuum suction operation prevents nozzle clogging.

The inkjet materials, service fluids, and other contaminants may be flowed from the catch tray **224** to a drain **425**. The drain **425** allows for the inkjet materials, service fluids, and other contaminants to be removed from the catch tray **224**. In some embodiments, the inkjet materials and the service fluids may be flowed back to the fluid supply manifold **106** via a recirculation line **426** coupled to the catch tray **224**.

At operation **503**, the catch tray **224** is moved from the work position to the park position. The catch tray **224** is in a park position when not performing servicing operations. The catch tray **224** is in the park positon as shown in FIG. **2**. In the park positon, the catch tray **224** may continue to flow any inkjet materials, service fluids, or other contaminants to the drain **425** or to the recirculation line **426**.

In summation, an inkjet service station and methods of servicing an inkjet printer with the inkjet service station are provided herein. The inkjet service station is disposed in an inkjet printer of an inkjet chamber. The inkjet service station is operable to perform servicing operations on a processing apparatus of the inkjet printer. The servicing operations include at least one of printhead spitting, printhead purging, printhead flushing, printhead cleaning, printhead drying, or vacuum suction. The inkjet service station is operable to move a catch tray independently in at least an –x direction, x direction, –y direction, and y direction to move into a work position under the processing apparatus. The processing apparatus remains stationary, thus process stability, printing consistency, and system robustness of the inkjet printer are improved. Performing the servicing operations with a single inkjet service station will improve performance consistency and optimize lifetime of the inkjet printer.

While the foregoing is directed to embodiments of the present disclosure, other and further embodiments of the disclosure may be devised without departing from the basic scope thereof, and the scope thereof is determined by the claims that follow.

What is claimed is:

1. An inkjet service station, comprising:
a first slide rail;
a service stage disposed on the first slide rail;
a service stage extension coupled to the service stage;
a second slide rail disposed on the service stage extension; and
a catch tray disposed on the second slide rail, the catch tray comprising:
a vacuum knife disposed in the catch tray;
a cleaning head disposed in the catch tray, the cleaning head operable to form a liquid bubble; and
a leak sensor disposed in the catch tray.

2. The inkjet service station of claim **1**, wherein the service stage is operable to move along the first slide rail in an x direction.

3. The inkjet service station of claim **2**, wherein the catch tray is operable to move along the second slide rail in a y direction, such that the catch tray is operable to move in one or both of the x direction and the y direction.

4. The inkjet service station of claim **1**, wherein the catch tray further comprises:
a vacuum cap coupled to the catch tray; and
an O-ring coupled to the vacuum cap.

5. An inkjet chamber, comprising:
a fluid supply manifold disposed in a lower region of the inkjet chamber;

an inkjet printer disposed in a processing region of the inkjet chamber, the inkjet chamber in fluid communication with the fluid supply manifold, the inkjet printer comprising:

a moveable stage configured to move along a pair of tracks;

a processing apparatus disposed above the moveable stage; and

an inkjet service station, the inkjet service station comprising:

a first slide rail;

a service stage disposed on the first slide rail;

a service stage extension coupled to the service stage;

a second slide rail disposed on the service stage extension; and

a catch tray disposed on the second slide rail.

6. The inkjet chamber of claim **5**, wherein the service stage is operable to move along the first slide rail in an x direction.

7. The inkjet chamber of claim **6**, wherein the catch tray is operable to move along the second slide rail in a y direction, such that the catch tray is operable to move in one or both of the x direction and the y direction.

8. The inkjet chamber of claim **5**, wherein the processing apparatus further includes one or more printheads, the one or more printheads operable to be serviced by the inkjet service station.

9. The inkjet chamber of claim **8**, wherein a tray distance defined as a distance between the catch tray and the one or more printheads is between about 1 mm and about 5 mm.

10. The inkjet chamber of claim **5**, wherein the catch tray further comprises:

a vacuum cap coupled to the catch tray; and

an O-ring coupled to the vacuum cap.

11. The inkjet chamber of claim **5**, wherein the processing apparatus is coupled to a support of the inkjet chamber such that the processing apparatus is stationary.

12. An inkjet chamber, comprising:

a fluid supply manifold disposed in a lower region of the inkjet chamber;

an inkjet printer disposed in a processing region of the inkjet chamber, the inkjet chamber in fluid communication with the fluid supply manifold, the inkjet printer comprising:

a moveable stage configured to move along a pair of tracks;

a processing apparatus disposed above the moveable stage; and

an inkjet service station, the inkjet service station comprising:

a first slide rail;

a service stage disposed on the first slide rail;

a service stage extension coupled to the service stage;

a second slide rail disposed on the service stage extension; and

a catch tray disposed on the second slide rail, wherein the catch tray comprises:

a vacuum knife disposed in the catch tray;

a cleaning head disposed in the catch tray, the cleaning head operable to form a liquid bubble; and

a leak sensor.

13. A method of performing servicing operations, comprising:

positioning a catch tray of a printhead service station under a processing apparatus of an inkjet printer, the catch tray moving on a second slide rail in one or both of an x direction and a y direction to be positioned under one or more printheads of the processing apparatus such that the processing apparatus remains stationary, the second slide rail disposed on a service stage extension;

performing one or more of the servicing operations on the processing apparatus with the catch tray, the servicing operations including one or more of printhead spitting, printhead purging, printhead flushing, printhead cleaning, printhead drying, or vacuum suction operations; and

moving the catch tray in one or both of an x direction and a y direction to be positioned away from the processing apparatus.

14. The method of performing servicing operations of claim **13**, wherein the printhead service station moves independently of a moveable stage configured to retain a substrate under the processing apparatus.

15. The method of performing servicing operations of claim **13**, wherein the printhead spitting includes depositing drops of inkjet materials at a fixed rate into the catch tray.

16. A method of performing servicing operations, comprising:

positioning a catch tray of a printhead service station under a processing apparatus of an inkjet printer, the catch tray moving in one or both of an x direction and a y direction to be positioned under one or more printheads of the processing apparatus such that the processing apparatus remains stationary;

performing one or more of the servicing operations on the processing apparatus with the catch tray, the servicing operations including one or more of printhead spitting, printhead purging, printhead flushing, printhead cleaning, printhead drying, or vacuum suction operations, wherein the printhead purging includes providing a positive air pressure through the one or more printheads such that inkjet materials in the one or more printheads are deposited into the catch tray; and

moving the catch tray in one or both of an x direction and a y direction to be positioned away from the processing apparatus.

17. The method of performing servicing operations of claim **13**, wherein the printhead flushing includes providing a servicing fluid through the one or more printheads such that inkjet materials and the servicing fluids are deposited into the catch tray.

18. A method of performing servicing operations, comprising:

positioning a catch tray of a printhead service station under a processing apparatus of an inkjet printer, the catch tray moving in one or both of an x direction and a y direction to be positioned under one or more printheads of the processing apparatus such that the processing apparatus remains stationary;

performing one or more of the servicing operations on the processing apparatus with the catch tray, the servicing operations including one or more of printhead spitting, printhead purging, printhead flushing, printhead cleaning, printhead drying, or vacuum suction operations, wherein the printhead cleaning includes wiping one or more printheads with a liquid bubble formed from a cleaning head disposed in the catch tray; and

moving the catch tray in one or both of an x direction and a y direction to be positioned away from the processing apparatus.

19. A method of performing servicing operations, comprising:

positioning a catch tray of a printhead service station under a processing apparatus of an inkjet printer, the catch tray moving in one or both of an x direction and a y direction to be positioned under one or more printheads of the processing apparatus such that the processing apparatus remains stationary;

performing one or more of the servicing operations on the processing apparatus with the catch tray, the servicing operations including one or more of printhead spitting, printhead purging, printhead flushing, printhead cleaning, printhead drying, or vacuum suction operations, wherein the printhead drying includes removing service fluids or inkjet materials from the one or more printheads with a vacuum knife disposed in the catch tray; and

moving the catch tray in one or both of an x direction and a y direction to be positioned away from the processing apparatus.

20. The method of performing servicing operations of claim **13**, wherein the vacuum suction provides a seal around the one or more printheads, a vacuum cap coupled to the catch tray and an O-ring coupled to the vacuum cap form the seal with the one or more printheads such that the vacuum cap extracts inkjet materials from the one or more printheads.

* * * * *