US011810755B2

(12) **United States Patent**
Godet et al.

(10) **Patent No.: US 11,810,755 B2**
(45) **Date of Patent: Nov. 7, 2023**

(54) **ION BEAM SOURCE FOR OPTICAL DEVICE FABRICATION USING A SEGMENTED ION SOURCE HAVING ONE OR MORE ANGLED SURFACES**

(71) Applicant: **Applied Materials, Inc.**, Santa Clara, CA (US)

(72) Inventors: **Ludovic Godet**, Sunnyvale, CA (US); **Joseph C. Olson**, Beverly, MA (US); **Rutger Meyer Timmerman Thijssen**, Sunnyvale, CA (US)

(73) Assignee: **Applied Materials, Inc.**, Santa Clara, CA (US)

(*) Notice: Subject to any disclaimer, the term of this patent is extended or adjusted under 35 U.S.C. 154(b) by 0 days.

(21) Appl. No.: **16/717,211**

(22) Filed: **Dec. 17, 2019**

(65) **Prior Publication Data**

US 2020/0194217 A1 Jun. 18, 2020

Related U.S. Application Data

(60) Provisional application No. 62/780,792, filed on Dec. 17, 2018, provisional application No. 62/780,805, filed on Dec. 17, 2018.

(51) **Int. Cl.**
H01J 37/305 (2006.01)
H01J 37/32 (2006.01)
(Continued)

(52) **U.S. Cl.**
CPC ***H01J 37/3053*** (2013.01); ***G02B 5/1857*** (2013.01); ***G02B 6/13*** (2013.01);
(Continued)

(58) **Field of Classification Search**
CPC .. H01J 37/32422; H01J 37/08; H01J 37/1472; H01J 37/05; H01J 2237/334
See application file for complete search history.

(56) **References Cited**

U.S. PATENT DOCUMENTS

4,240,448 A 12/1980 Heitmann et al.
5,116,461 A 5/1992 Lebby et al.
(Continued)

FOREIGN PATENT DOCUMENTS

CN 102360093 A 2/2012
CN 107564810 A 1/2018
(Continued)

OTHER PUBLICATIONS

Taiwan Office Action issued to 108146247 dated Sep. 23, 2020.
(Continued)

Primary Examiner — David A Vanore
(74) *Attorney, Agent, or Firm* — PATTERSON & SHERIDAN, LLP

(57) **ABSTRACT**

Aspects of the disclosure relate to apparatus for the fabrication of waveguides. In one example, an angled ion source is utilized to project ions toward a substrate to form a waveguide which includes angled gratings. In another example, an angled electron beam source is utilized to project electrons toward a substrate to form a waveguide which includes angled gratings. Further aspects of the disclosure provide for methods of forming angled gratings on waveguides utilizing an angled ion beam source and an angled electron beam source.

13 Claims, 8 Drawing Sheets

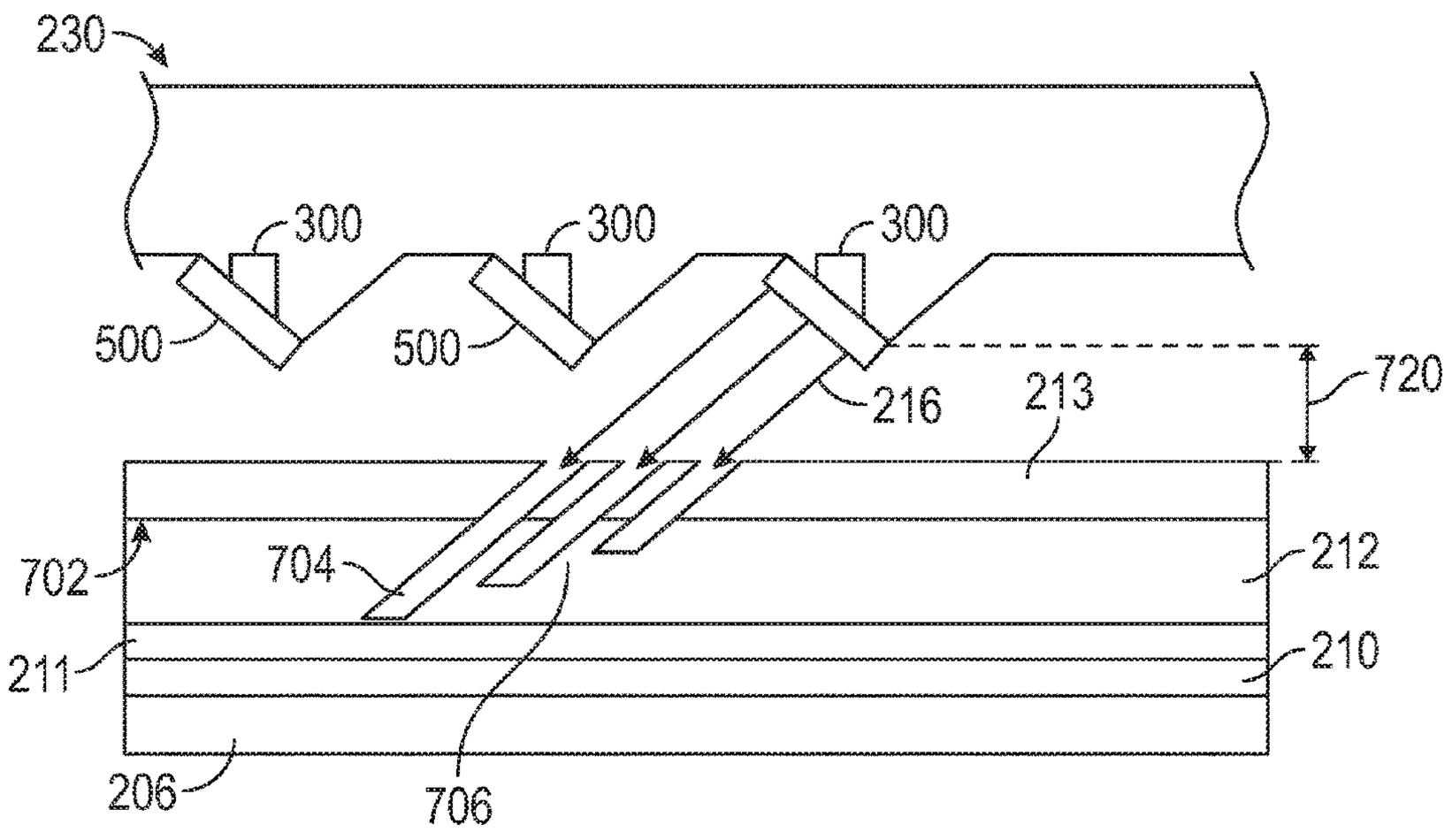

(51) **Int. Cl.**

G02B 6/13	(2006.01)
H01L 21/3065	(2006.01)
G02B 5/18	(2006.01)
H01J 37/05	(2006.01)
G02B 6/12	(2006.01)
G02B 6/124	(2006.01)
G06T 19/00	(2011.01)
H01J 37/073	(2006.01)
H01J 37/304	(2006.01)
H01J 37/147	(2006.01)

(52) **U.S. Cl.**

CPC ***H01J 37/32422*** (2013.01); ***H01L 21/3065*** (2013.01); *G02B 6/124* (2013.01); *G02B 6/12007* (2013.01); *G02B 2006/12176* (2013.01); *G06T 19/006* (2013.01); *H01J 37/05* (2013.01); *H01J 37/073* (2013.01); *H01J 37/1472* (2013.01); *H01J 37/3045* (2013.01); *H01J 37/32449* (2013.01); *H01J 2237/303* (2013.01); *H01J 2237/334* (2013.01)

(56) **References Cited**

U.S. PATENT DOCUMENTS

5,375,456	A	12/1994	Burns	
5,858,450	A	1/1999	Fujimura et al.	
9,257,295	B2	2/2016	Singh et al.	
9,478,399	B2	10/2016	Likhanskii et al.	
9,812,349	B2	11/2017	Angelov et al.	
10,141,161	B2	11/2018	Gilchrist et al.	
10,224,221	B2	3/2019	Singh et al.	
10,431,459	B2	10/2019	Lee et al.	
2002/0014597	A1	2/2002	Koh et al.	
2005/0230353	A1	10/2005	Danziger	
2006/0236931	A1	10/2006	Singh et al.	
2008/0317968	A1	12/2008	Singh et al.	
2009/0084501	A1*	4/2009	Chen	H01J 37/32357 156/345.26
2010/0231693	A1	9/2010	Levola	
2010/0282413	A1	11/2010	Nolan et al.	
2011/0065282	A1	3/2011	Yan et al.	
2011/0155921	A1*	6/2011	Kellerman	H01J 37/1477 250/396 R
2012/0196430	A1	8/2012	Riordon et al.	
2014/0272179	A1*	9/2014	Radovanov	H01J 37/32357 427/523
2015/0011093	A1	1/2015	Singh et al.	
2015/0368801	A1*	12/2015	Xue	C23C 16/045 216/13
2016/0027646	A1	1/2016	Wu et al.	
2016/0035539	A1	2/2016	Sainiemi et al.	
2016/0064260	A1	3/2016	Berry, III et al.	
2016/0276134	A1	9/2016	Collins et al.	
2017/0179381	A1	6/2017	Park et al.	
2018/0095201	A1	4/2018	Melli et al.	
2018/0158643	A1*	6/2018	Park	H01J 37/32422
2018/0340769	A1	11/2018	Evans et al.	
2018/0348429	A1	12/2018	Young et al.	
2020/0157682	A1*	5/2020	Sung	C23C 16/509

FOREIGN PATENT DOCUMENTS

EP	2418674	A2	2/2012
JP	2006-190970	A	7/2006
TW	200710960	A	3/2007
TW	201517162	A	5/2015
TW	201017750	A	5/2020
WO	2013091694	A1	6/2013
WO	2015-167682	A1	11/2015

OTHER PUBLICATIONS

International Search Report and Written Opinion for International Application No. PCT/US2019/066797 dated Apr. 16, 2020.
International Search Report and Written Opinion for International Application No. PCT/US2019/066780 dated Apr. 17, 2020.
International Search Report and Written Opinion for International Application No. PCT/US2019/066806 dated Apr. 16, 2020.
International Search Report and Written Opinion for International Application No. PCT/US2019/066789 dated Apr. 16, 2020.
European Search Report Issued to Patent Application No. 19901253.5 dated Nov. 28, 2022.
PCT International Search Report and the Written Opinion of the International Searching Authority for Application No. PCT/US2019/064966; dated Mar. 26, 2020.
European Search Report issued to Application No. 19900530.7 dated Aug. 12, 2022.
China Office Action issued to Application No. 201980083897.X dated Dec. 2, 2022.
Chinese Patent Application No. 2023053100787620 Office Action dated May 31, 2023.

* cited by examiner

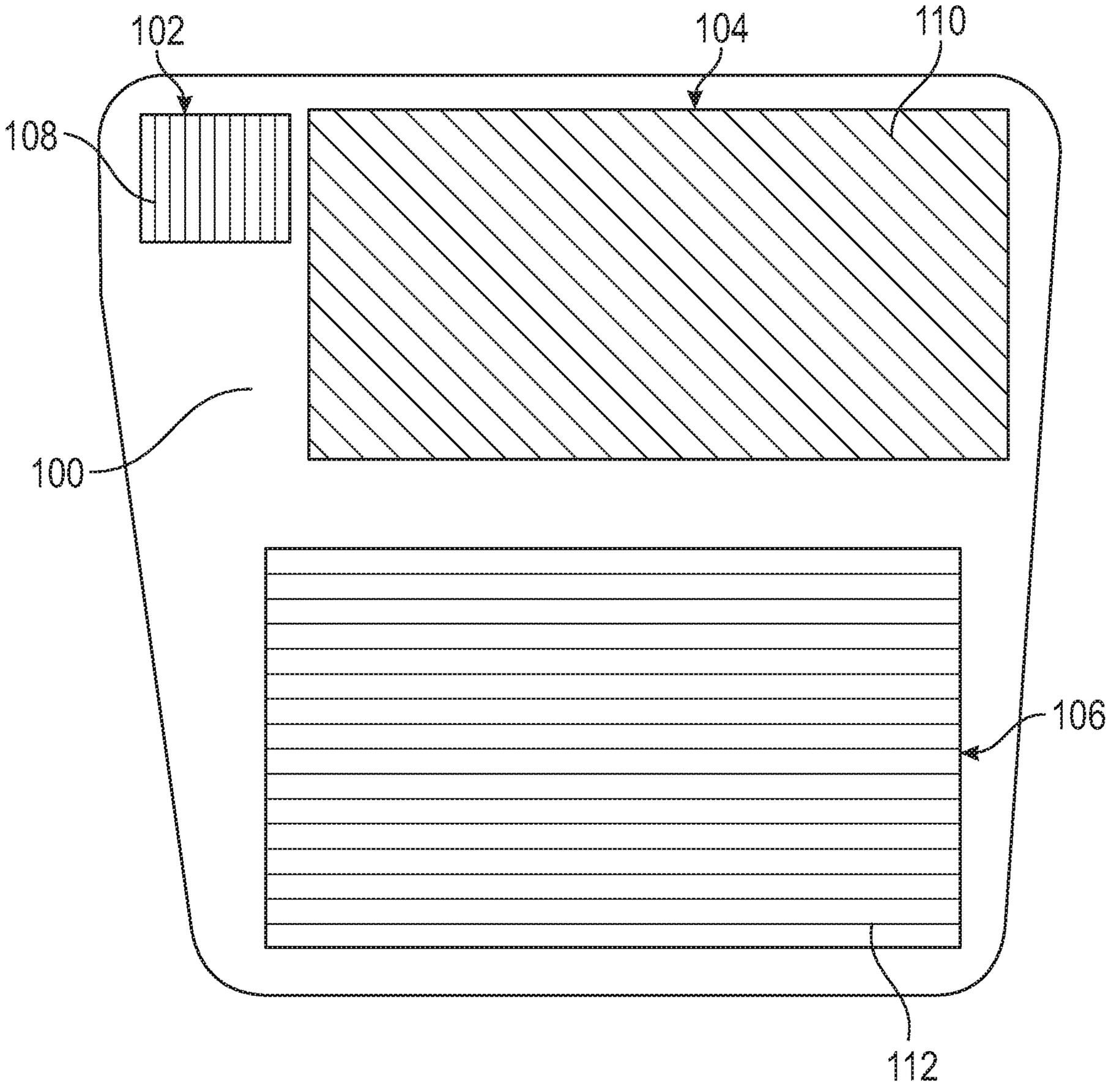

FIG. 1

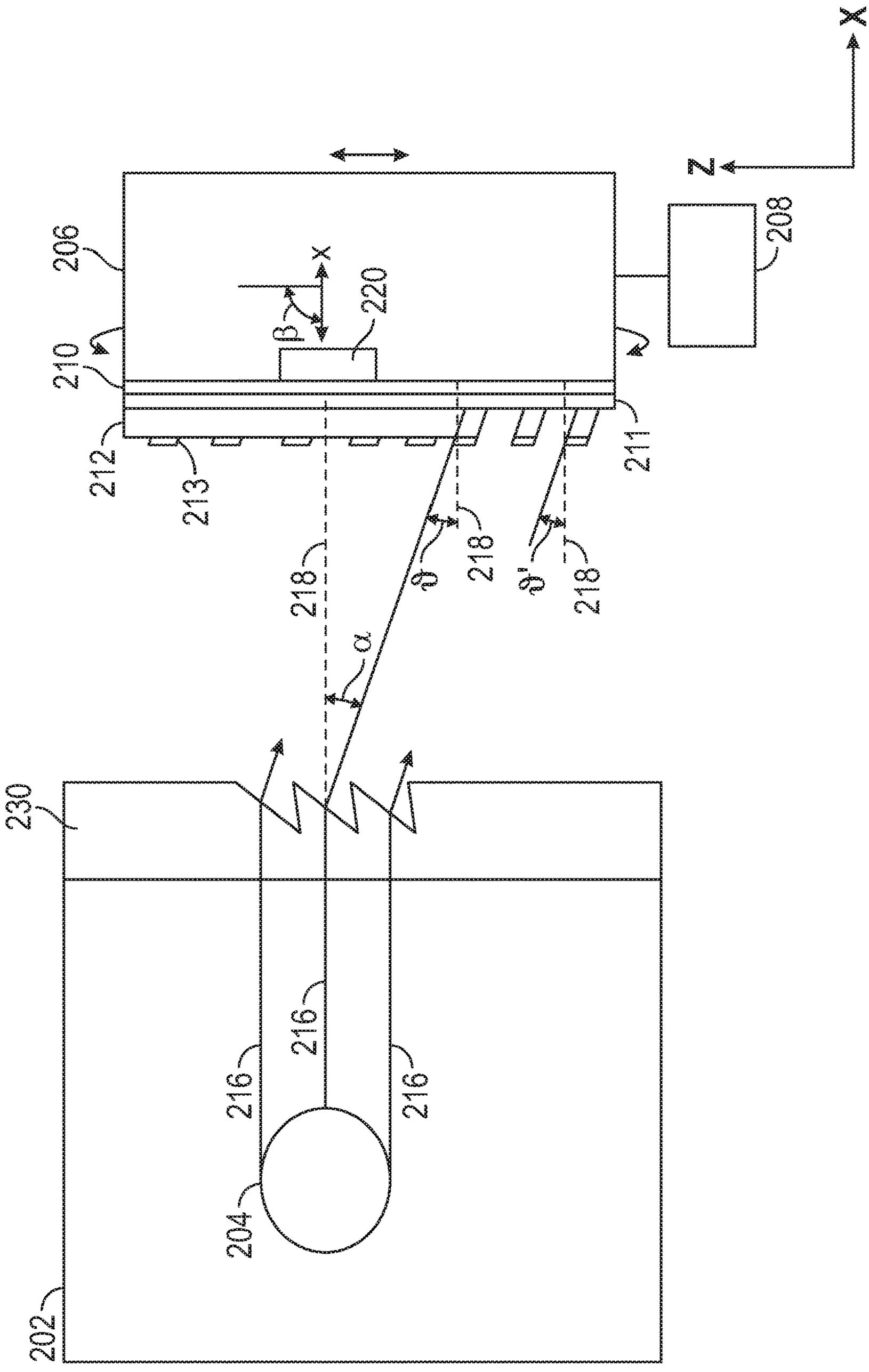
X
Z
206
208
x
B
220
210
212
213
211
218
218
218
b
b'
α
230
216
216
216
204
202
200

FIG. 2

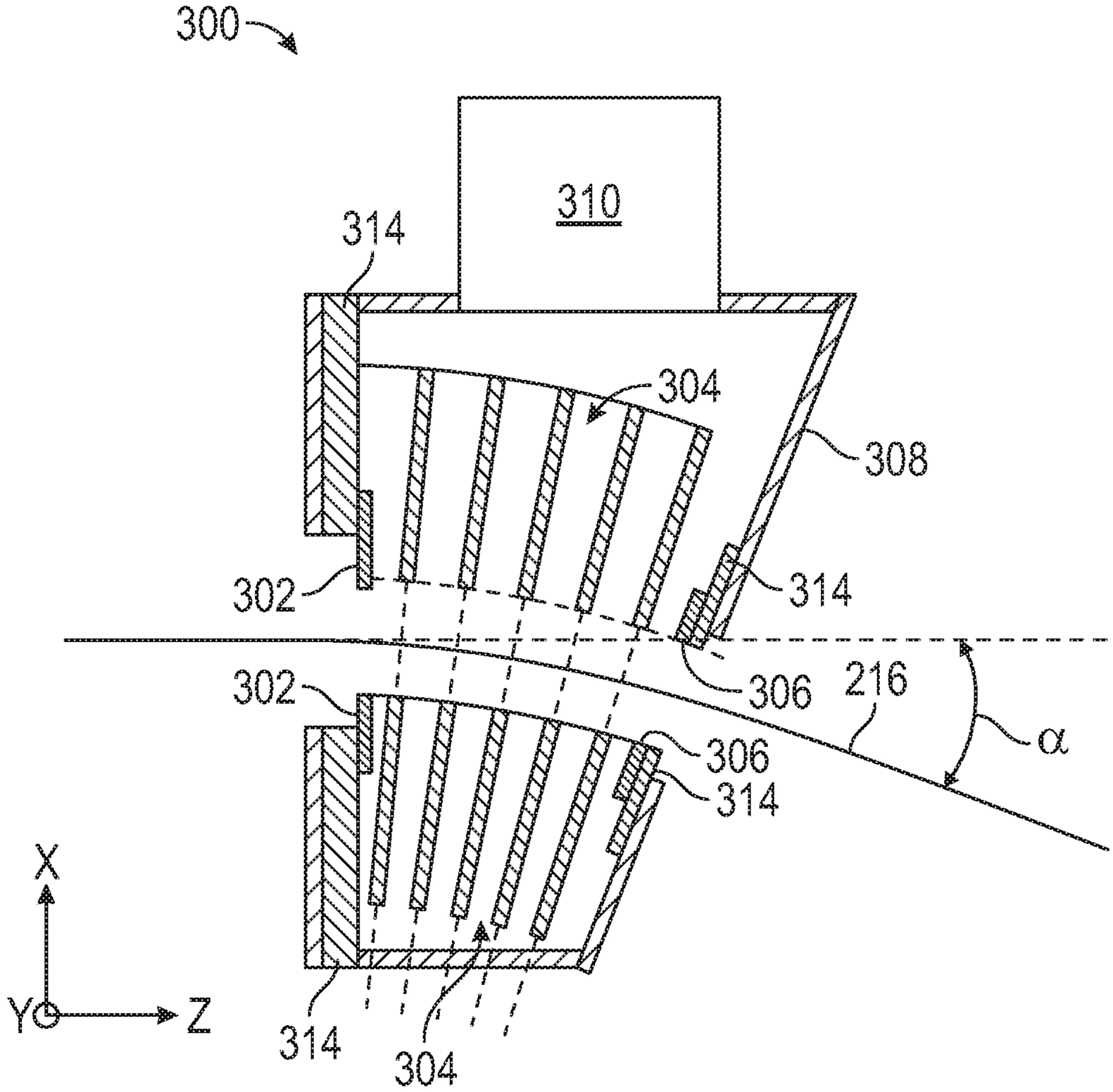

FIG. 3

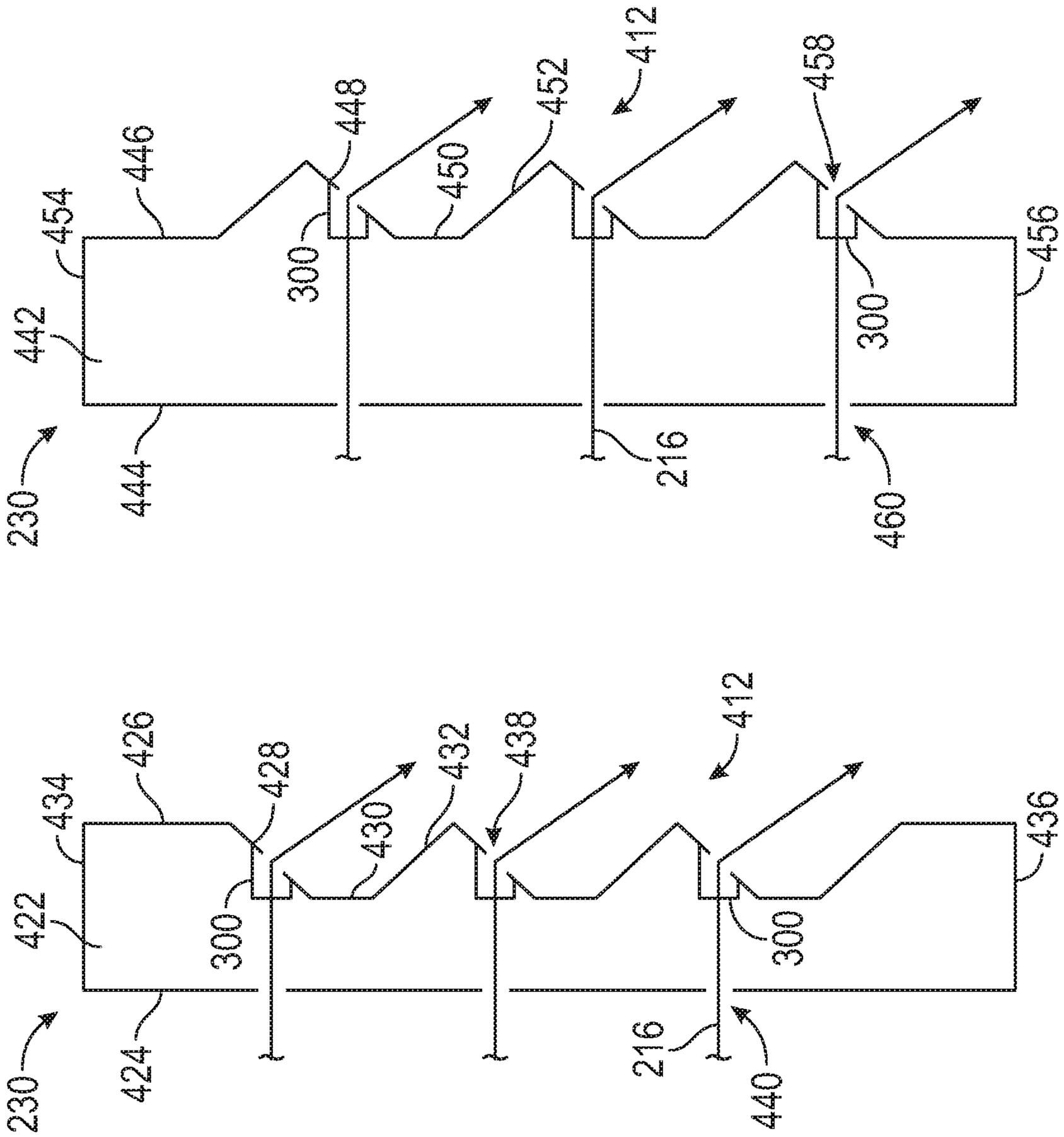

FIG. 4C

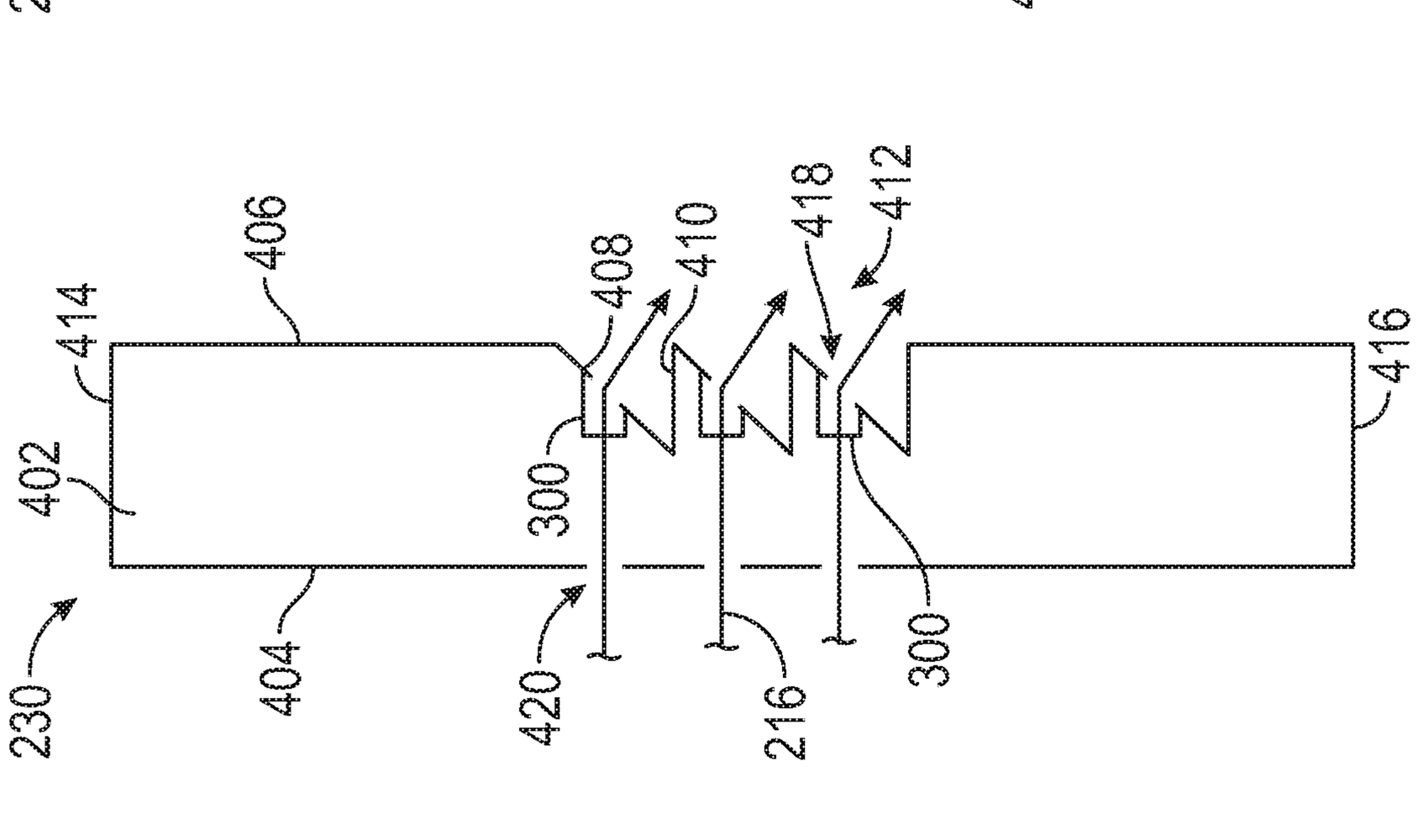

FIG. 4B

FIG. 4A

230
442
458
500
300
500
300
448
500
300
446
460

FIG. 5B

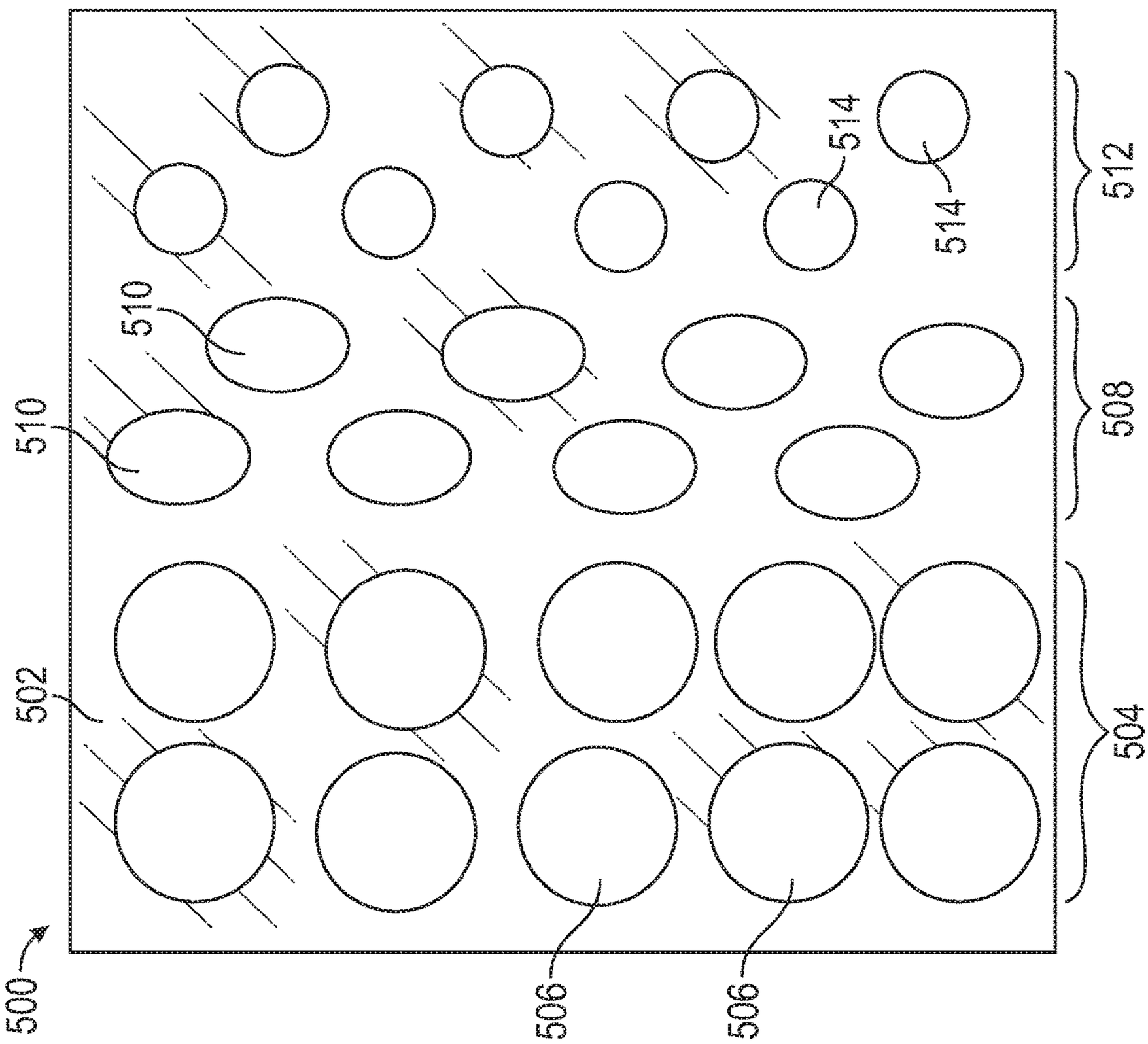
500
502
510
510
506
506
514
514
504
508
512

FIG. 5A

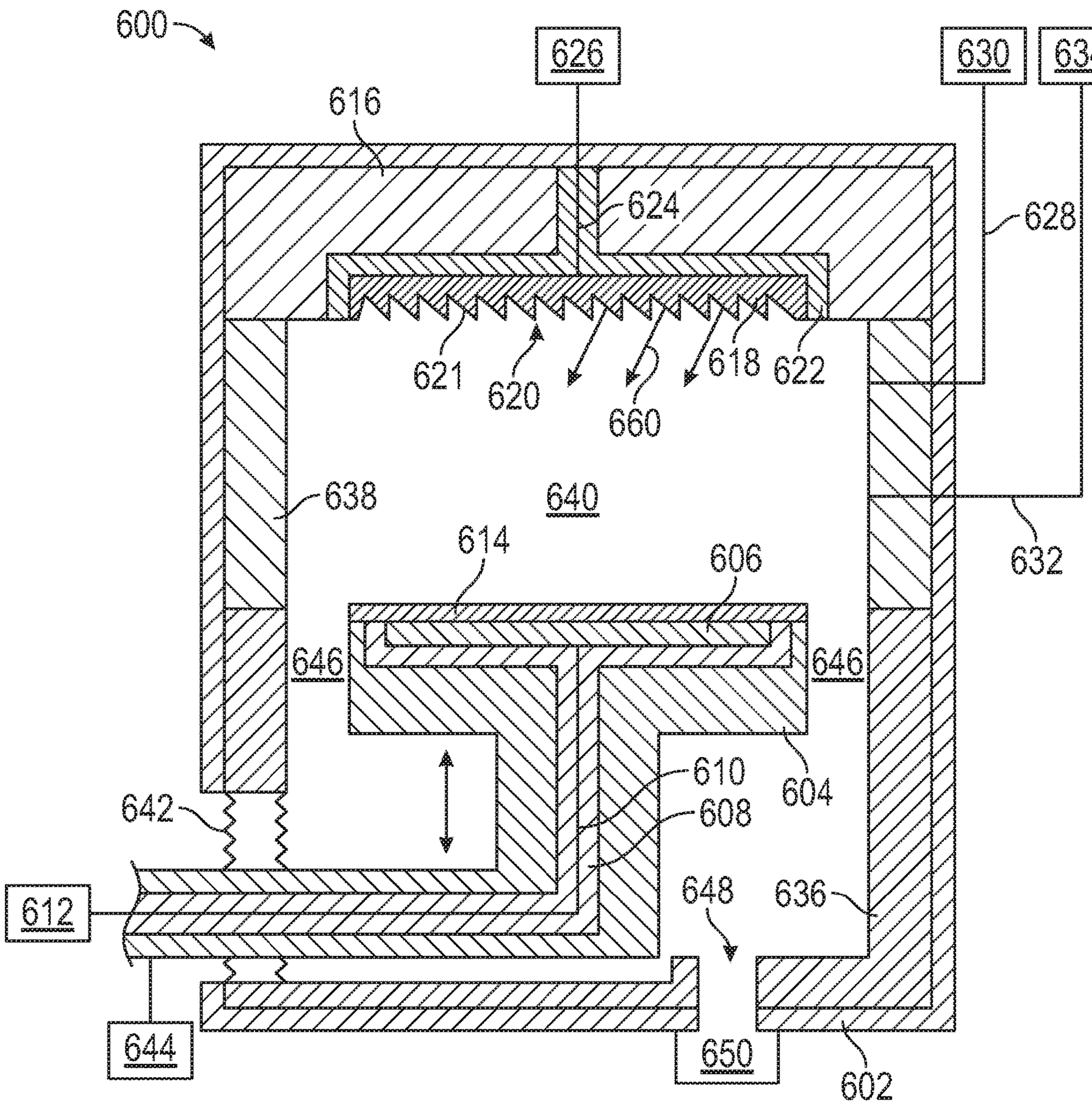
600
626
630
634
616
624
628
621
620
660
618
622
638
640
632
614
606
646
646
610
604
608
642
612
648
636
644
650
602

FIG. 6

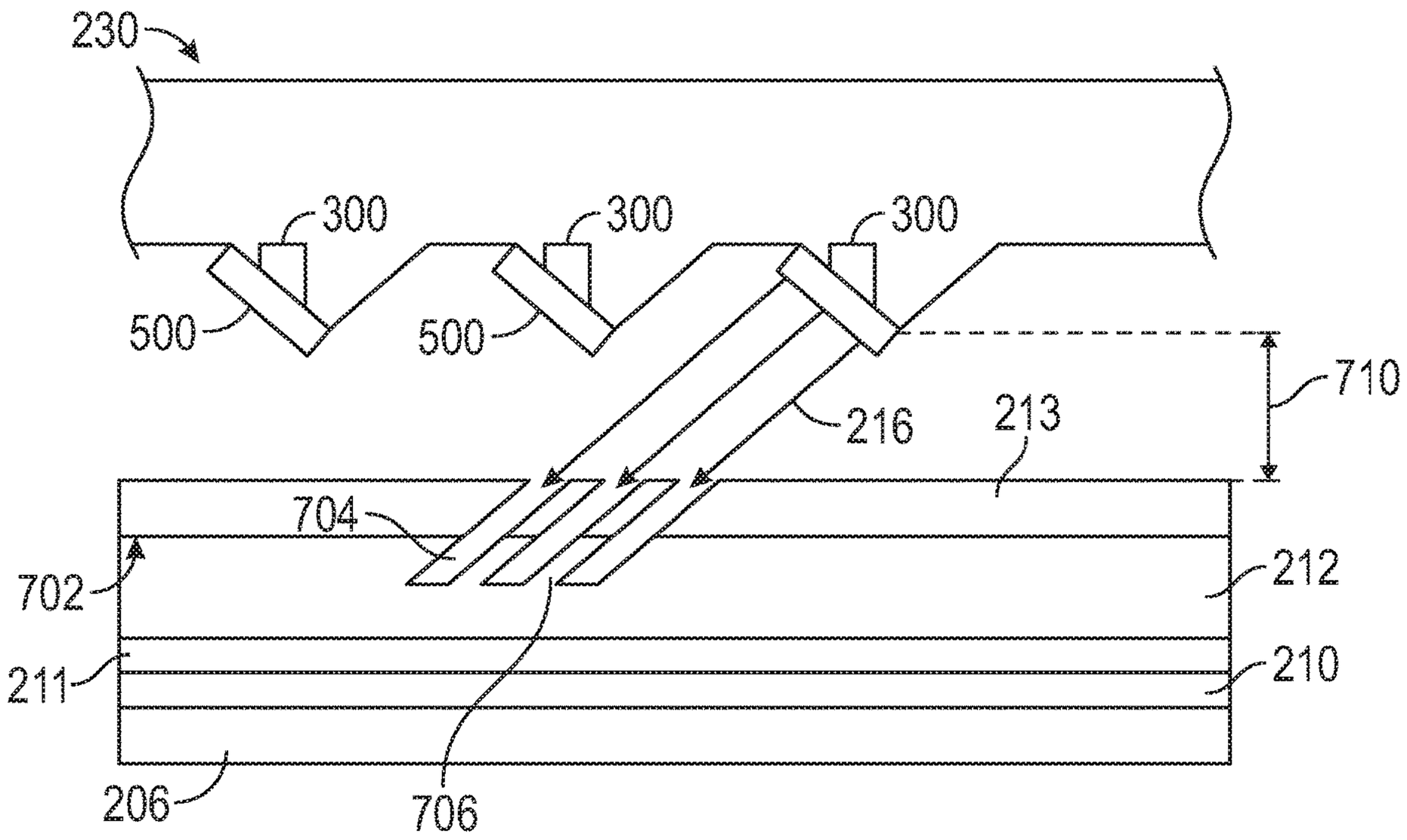
230
300
300
300
500
500
710
216
213
704
702
212
211
210
206
706

FIG. 7A

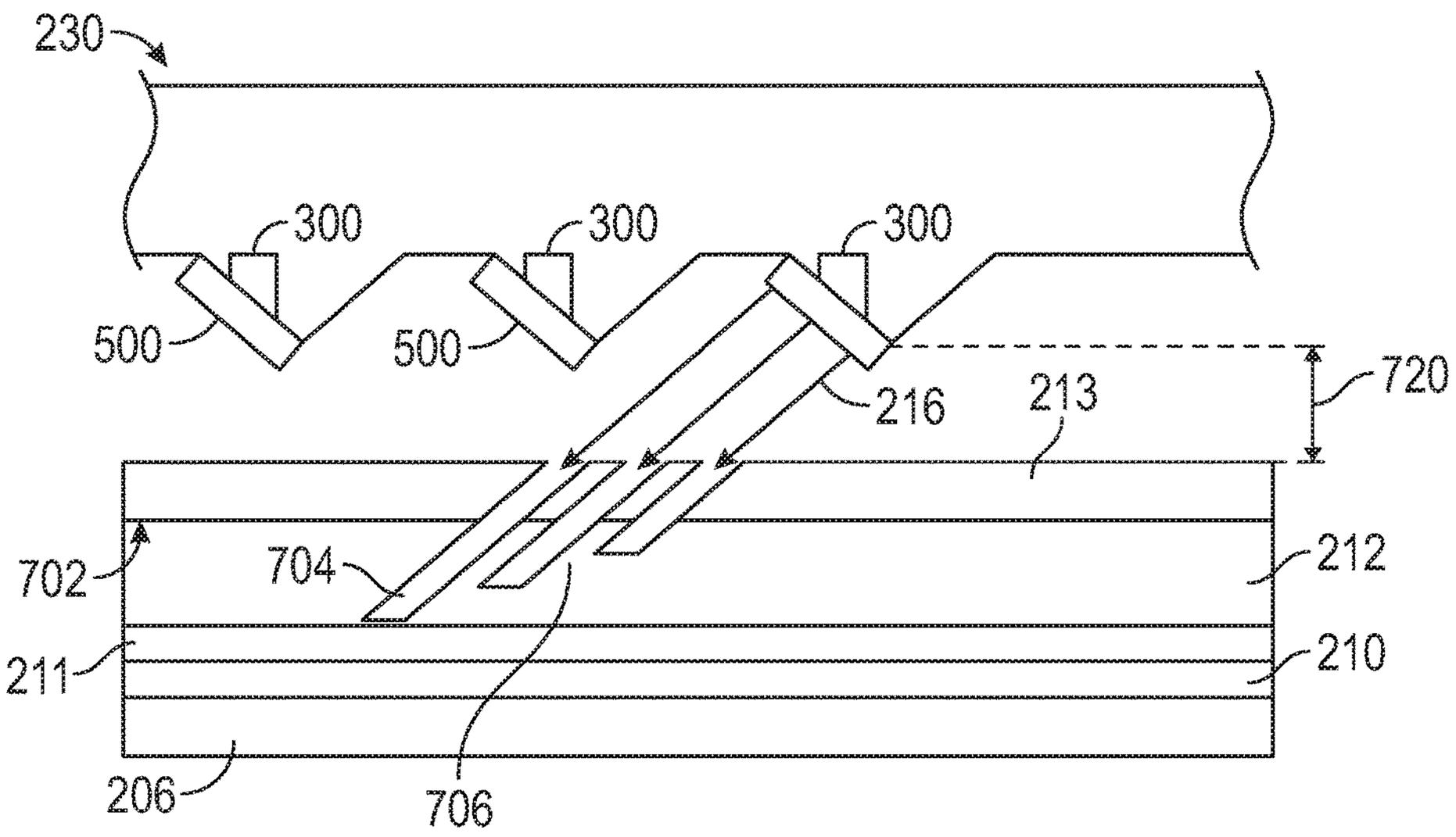
230
300
300
300
500
500
720
216
213
704
702
212
211
210
206
706

FIG. 7B

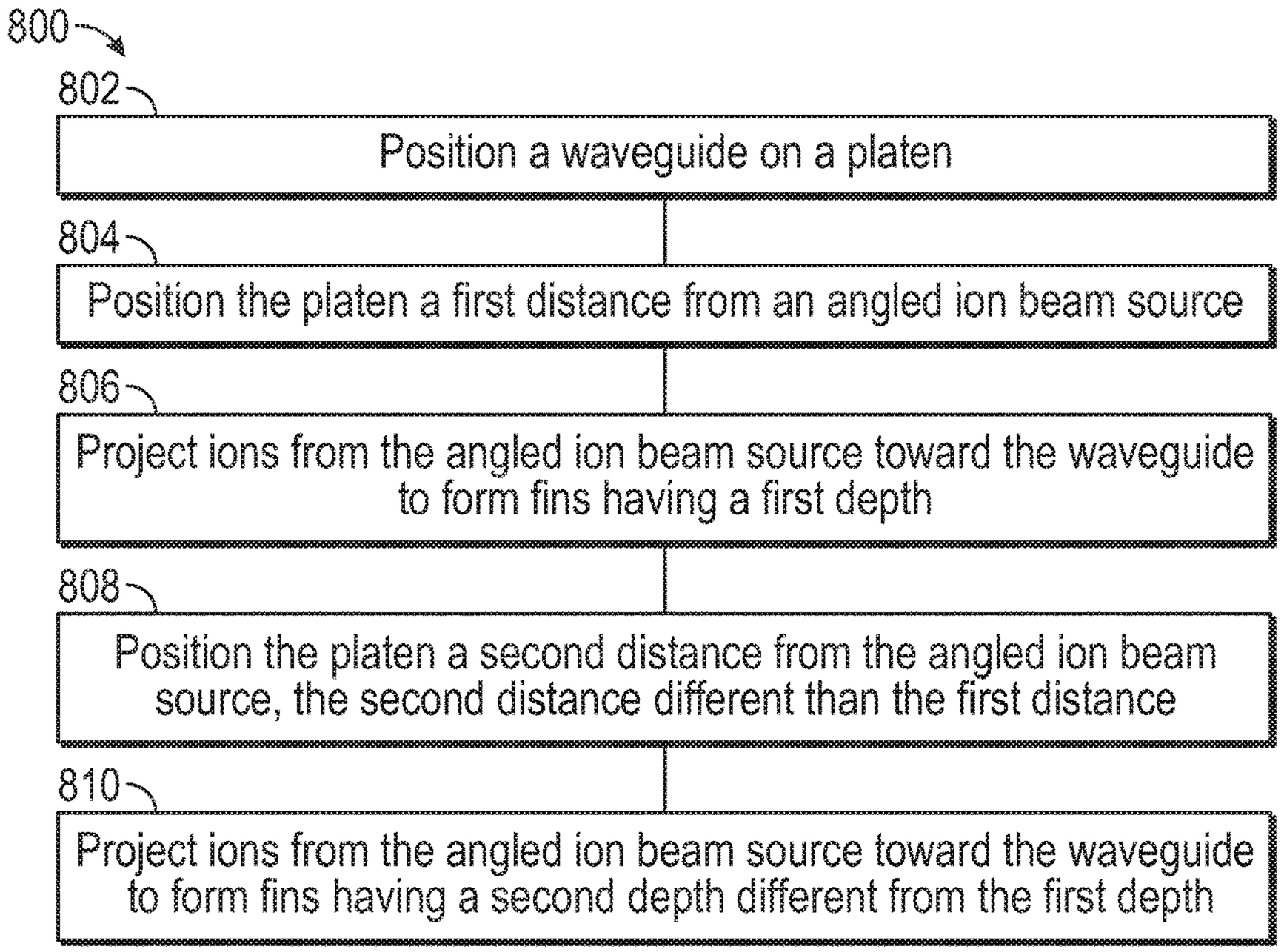
800
802
Position a waveguide on a platen
804
Position the platen a first distance from an angled ion beam source
806
Project ions from the angled ion beam source toward the waveguide to form fins having a first depth
808
Position the platen a second distance from the angled ion beam source, the second distance different than the first distance
810
Project ions from the angled ion beam source toward the waveguide to form fins having a second depth different from the first depth

FIG. 8

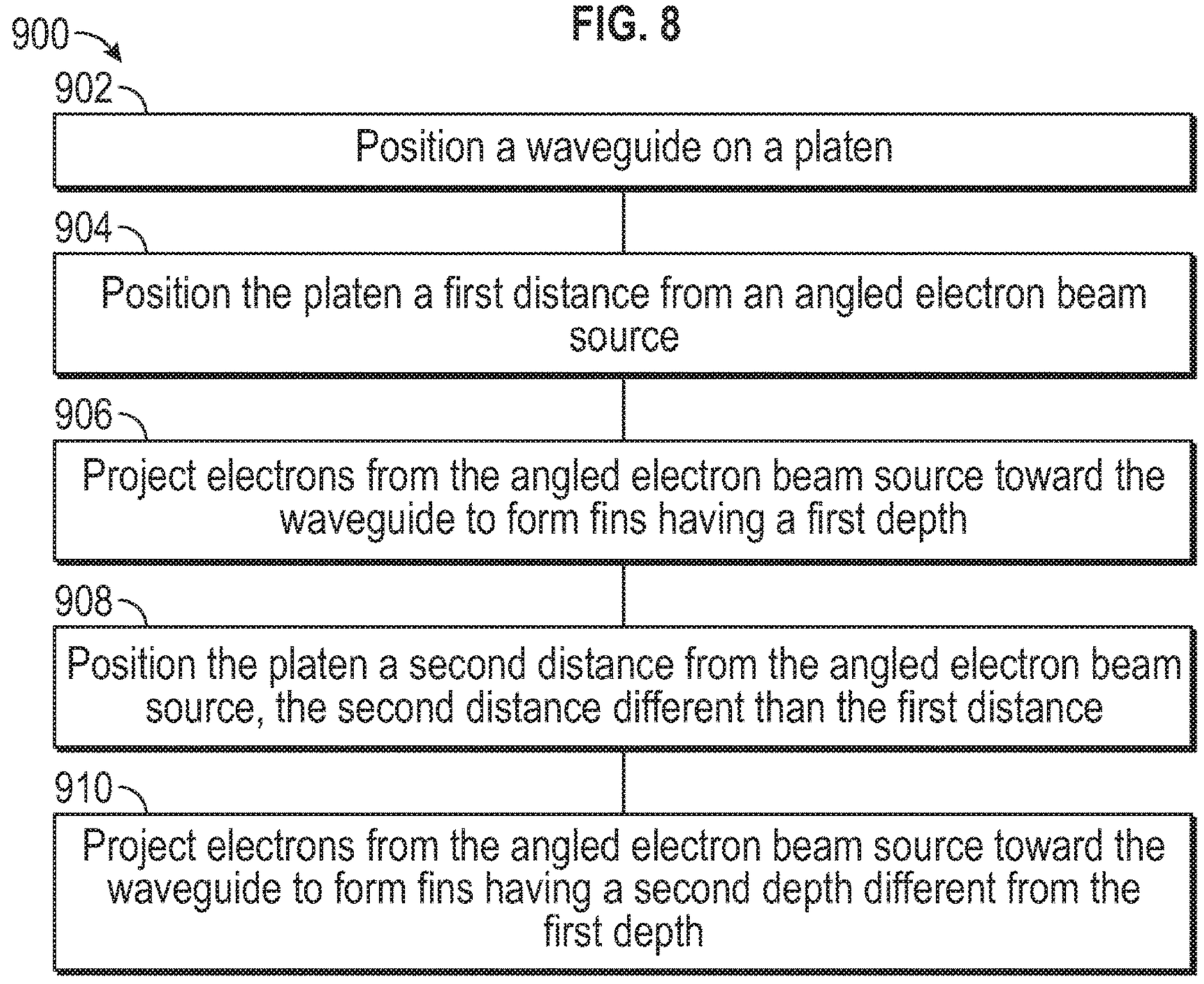
900
902
Position a waveguide on a platen
904
Position the platen a first distance from an angled electron beam source
906
Project electrons from the angled electron beam source toward the waveguide to form fins having a first depth
908
Position the platen a second distance from the angled electron beam source, the second distance different than the first distance
910
Project electrons from the angled electron beam source toward the waveguide to form fins having a second depth different from the first depth

FIG. 9

ION BEAM SOURCE FOR OPTICAL DEVICE FABRICATION USING A SEGMENTED ION SOURCE HAVING ONE OR MORE ANGLED SURFACES

CROSS-REFERENCE TO RELATED APPLICATIONS

This application claims benefit of U.S. provisional patent application Ser. No. 62/780,805, filed Dec. 17, 2018, and United States provisional patent application Ser. No. 62/780,792, filed Dec. 17, 2018, both of which are herein incorporated by reference in their entirety.

BACKGROUND

Field

Embodiments of the disclosure generally relate to apparatus and methods for optical device fabrication. More specifically, embodiments of the disclosure relate to apparatus and methods for ion beam and electron beam waveguide fabrication.

Description of the Related Art

Virtual reality is generally considered to be a computer generated simulated environment in which a user has an apparent physical presence. A virtual reality experience can be generated in three dimensions (3D) and viewed with a head-mounted display (HMD), such as glasses or other wearable display devices that have near-eye display panels as lenses to display a virtual reality environment that replaces an actual environment.

Augmented reality, however, enables an experience in which a user can still see through the display lenses of the glasses or other HMD device to view the surrounding environment, yet also see images of virtual objects that are generated for display and appear as part of the environment. Augmented reality can include any type of input, such as audio and haptic inputs, as well as virtual images, graphics, and video that enhances or augments the environment that the user experiences. As an emerging technology, there are many challenges and design constraints with augmented reality.

One such challenge is displaying a virtual image overlayed on an ambient environment. Waveguides are used to assist in overlaying images. Generated light propagates through a waveguide until the light exits the waveguide and is overlayed on the ambient environment. Fabricating waveguides can be challenging as waveguides tend to have non-uniform properties. Accordingly, what is needed in the art are improved methods and systems of waveguide fabrication

SUMMARY

In one embodiment, an etching apparatus is provided. The apparatus includes an ion beam chamber which has an ion beam source and a segmented ion source coupled to the ion beam chamber. The segmented ion source includes one or more angled surfaces. An electrode assembly is aligned with the one or more angled surfaces and a platen is disposed opposite the segmented ion source. The one or more angles surface of the segmented ion source are disposed at a non-normal angle relative to a supporting surface of the platen.

In another embodiment, an etching apparatus is provided. The apparatus includes an ion beam chamber which has an ion beam source and a segmented ion source coupled to the ion beam chamber. The segmented ion source includes an angled surface. An electrode assembly is disposed adjacent to the angled surface, a filter plate is disposed adjacent to the angled surface opposite the electrode assembly, and a platen is disposed opposite the segmented ion source.

In yet another embodiment, an etching apparatus is provided. The apparatus includes a segmented ion source coupled to an ion beam chamber. The segmented ion source includes a first wall coupled to the ion beam chamber and a second wall disposed opposite of the first wall. A plurality of angled surfaces are formed in the second wall, an electrode assembly is disposed adjacent to each angled surface of the plurality of angled surfaces, and a filter plate is disposed adjacent to each angled surface of the plurality of angled surfaces. The filter plate is disposed opposite the electrode assembly.

BRIEF DESCRIPTION OF THE DRAWINGS

So that the manner in which the above recited features of the present disclosure can be understood in detail, a more particular description of the disclosure, briefly summarized above, may be had by reference to embodiments, some of which are illustrated in the appended drawings. It is to be noted, however, that the appended drawings illustrate only exemplary embodiments and are therefore not to be considered limiting of its scope, and may admit to other equally effective embodiments.

FIG. **1** illustrates a plan view of a waveguide combiner according to an embodiment of the disclosure.

FIG. **2** illustrates a schematic side view of an angled etch system according to an embodiment of the disclosure.

FIG. **3** illustrates a side sectional view of an electrode assembly according to an embodiment of the disclosure.

FIG. **4**A illustrates a schematic side view of a segmented ion source according to an embodiment of the disclosure.

FIG. **4**B illustrates a schematic side view of a segmented ion source according to an embodiment of the disclosure.

FIG. **4**C illustrates a schematic side view of a segmented ion source according to an embodiment of the disclosure.

FIG. **5**A illustrates a schematic plan view of a filter plate according to an embodiment of the disclosure.

FIG. **5**B illustrates a schematic side view of the segmented ion source of FIG. **4**C with filter plates coupled thereto according to an embodiment of the disclosure.

FIG. **6** illustrates a schematic cross-sectional view of an electron beam etching system according to an embodiment of the disclosure.

FIG. **7**A illustrates an angled etching process performed on a waveguide at a first position according to an embodiment of the disclosure.

FIG. **7**B illustrates the waveguide of FIG. **7**A during the angled etching process at a second position according to an embodiment of the disclosure.

FIG. **8** illustrates operations of a method for etching a waveguide with an angled ion beam according to an embodiment of the disclosure.

FIG. **9** illustrates operations of a method for etching a waveguide with an angled electron beam according to an embodiment of the disclosure.

To facilitate understanding, identical reference numerals have been used, where possible, to designate identical elements that are common to the figures. It is contemplated

that elements and features of one embodiment may be beneficially incorporated in other embodiments without further recitation.

DETAILED DESCRIPTION

Aspects of the disclosure relate to apparatus for the fabrication of nanostructured optical devices, such as waveguides, waveguide combiners, angled gratings, and metalenses, for use in a variety of devices, such as headsets for augmented reality/virtual reality (AR/VR) and smart windows. In one example, an angled ion source is utilized to project ions toward a substrate to form a waveguide which includes angled gratings. In another example, an angled electron beam source is utilized to project electrons toward a substrate to form a waveguide which includes angled gratings. Further aspects of the disclosure provide for methods of forming angled gratings on waveguides utilizing an angled ion beam source and an angled electron beam source.

FIG. **1** illustrates a plan view of a waveguide combiner **100** according to an embodiment of the disclosure. It is to be understood that the waveguide combiner **100** described below is an exemplary waveguide combiner and other waveguide combiners having different designs may benefit from the embodiments described herein. The waveguide combiner **100** includes an input coupling region **102** defined by a plurality of gratings **108**, an intermediate region **104** defined by a plurality of gratings **110**, and an output coupling region **106** defined by a plurality of gratings **112**. The input coupling region **102** receives incident beams of light (a virtual image) having an intensity from a microdisplay. Each grating, such as a fin structure or the like, of the plurality of gratings **108** splits the incident beams into a plurality of modes, each beam having a mode. Zero-order mode (T0) beams are reflected back or transmitted through the waveguide combiner **100**, positive first-order mode (T1) beams are coupled though the waveguide combiner **100** to the intermediate region **104**, and negative first-order mode (T−1) beams propagate in the waveguide combiner **100** a direction opposite to the T1 beams. Ideally, the incident beams are split into T1 beams that have all of the intensity of the incident beams in order to direct the virtual image to the intermediate region **104**. One approach to split the incident beam into T1 beams that have all of the intensity of the incident beams is to utilize fins, which comprise the gratings **108**, having a slant angle to suppress the T−1 beams and the T0 beams. The T1 beams undergo total-internal-reflection (TIR) through the waveguide combiner **100** until the T1 beams come in contact with the plurality of gratings **110** in the intermediate region **104**. A portion of the input coupling region **102** may have gratings **108** with a slant angle different than the slant angle of gratings **108** from an adjacent portion of the input coupling region **102**.

The T1 beams contact a fin of the plurality of gratings **110**. The T1 beams are split into T0 beams refracted back or lost in the waveguide combiner **100**, T1 beams that undergo TIR in the intermediate region **104** until the T1 beams contact another fin of the plurality of gratings **110**, and T−1 beams that are coupled through the waveguide combiner **100** to the output coupling region **106**. The T1 beams that undergo TIR in the intermediate region **104** continue to contact gratings of the plurality of gratings **110** until the either the intensity of the T1 beams coupled through the waveguide combiner **100** to the intermediate region **104** is depleted, or remaining T1 beams propagating through the intermediate region **104** reach the end of the intermediate region **104**.

The plurality of gratings **110** are tuned to control the T1 beams coupled through the waveguide combiner **100** to the intermediate region **104** to control the intensity of the T−1 beams coupled to the output coupling region **106** to modulate a field of view of the virtual image produced from the microdisplay from a user's perspective and increase a viewing angle from which a user can view the virtual image. One approach to control the T1 beams coupled through the waveguide combiner **100** to the intermediate region **104** is to optimize the slant angle of each fin of the plurality of gratings **110** to control the intensity of the T−1 beams coupled to the output coupling region **106**. A portion of the intermediate region **104** may have gratings **110** with a slant angle different than the slant angle of gratings **110** from an adjacent portion of the intermediate region **104**. Furthermore, the gratings **110** may have fins with slant angles different than the slant angles of fins of the gratings **108**.

The T−1 beams coupled through the waveguide combiner **100** to the output coupling region **106** undergo TIR in the waveguide combiner **100** until the T−1 beams contact a grating of the plurality of gratings **112** where the T−1 beams are split into TO beams refracted back or lost in the waveguide combiner **100**. T1 beams that undergo TIR in the output coupling region **106** until the T1 beams contact another fin of the plurality of gratings **112** and T−1 beams coupled out of the waveguide combiner **100**. The T1 beams that undergo TIR in the output coupling region **106** continue to contact fins of the plurality of gratings **112** until either the intensity of the T−1 beams coupled through the waveguide combiner **100** to the output coupling region **106** is depleted or remaining T1 beams propagating through the output coupling region **106** have reached the end of the output coupling region **106**. The plurality of gratings **112** are tuned to control the T−1 beams coupled through the waveguide combiner **100** to the output coupling region **106** in order to control the intensity of the T−1 beams coupled out of the waveguide combiner **100** to further modulate the field of view of the virtual image produced from the microdisplay from the user's perspective and further increase the viewing angle from which the user can view the virtual image.

One approach to control the T−1 beams coupled through the waveguide combiner **100** to the output coupling region **106** is to optimize the slant angle of each fin of the plurality of gratings **112** to further modulate the field of view and increase the viewing angle. A portion of the intermediate region **104** may have gratings **110** with a fin slant angle different than the slant angle of fins of the gratings **110** from an adjacent portion of the intermediate region **104**. Furthermore, the gratings **112** may have fin slant angles different that the fin slant angles of the gratings **108** and the gratings **110**.

FIG. **2** illustrates a schematic side view of an angled etch system **200** according to an embodiment of the disclosure. It is to be understood that the angled etch system **200** described below is an exemplary angled etch system and other angled etch systems may be used with or modified to fabricate waveguide combiners in accordance with the embodiments of the disclosure.

To form fins having slant angles, a grating material **212** disposed on a substrate **210** is etched by the angled etch system **200**. In one embodiment, the grating material **212** is disposed on an etch stop layer **211** disposed on the substrate **210** and a patterned hardmask **213** is disposed over the grating material **212**. The materials of grating material **212** are selected based on the slant angle ϑ' of each fin and the refractive index of the substrate **210** to control the in-coupling and out-coupling of light and facilitate light propa-

gation through a waveguide combiner. In another embodiment, the grating material **212** includes silicon oxycarbide (SiOC), titanium dioxide (TiO_2), silicon dioxide (SiO_2), vanadium (IV) oxide (VOx), aluminum oxide (Al_2O_3), indium tin oxide (ITO), zinc oxide (ZnO), tantalum pentoxide (Ta_2O_5), silicon nitride (Si_3N_4), titanium nitride (TiN), and/or zirconium dioxide (ZrO_2) containing materials. The grating material **212** has a refractive index between about 1.5 and about 2.65.

In another embodiment, which may be combined with other embodiments described herein, the patterned hardmask **213** is a non-transparent hardmask that is removed after the waveguide combiner is formed. For example, the non-transparent hardmask includes reflective materials, such as chromium, silver, titanium nitride, tantalum nitride, silicon nitride, or silicon oxide materials. In another embodiment, the patterned hardmask **213** is a transparent hardmask. In one embodiment, which may be combined with other embodiments described herein, the etch stop layer **211** is a non-transparent etch stop layer that is removed after the waveguide combiner is formed. In another embodiment, which may be combined with other embodiments described herein, the etch stop layer **211** is a transparent etch stop layer.

The angled etch system **200** includes an ion beam chamber **202** that houses an ion beam source **204**. The ion beam source **204** is configured to generate an ion beam **216**, such as a spot beam, a ribbon beam, or a full substrate-size beam. The ion beam chamber **202** is configured to direct the ion beam **216** at an angle α relative to a datum plane **218** oriented normal to the substrate **210**. For example, the system **200** also includes a segmented source **230**. The segmented source **230** modulates the angle of the ion beam **216** to achieve the angle α utilized to fabricate the fins in the grating material **212**. The segmented source **230**, which may include a plurality of segments, each including one or more electrodes, is described in detail with regard to FIG. **3** and FIGS. **4**A-**4**C.

The substrate **210** is retained on a platen **206** coupled to a first actuator **208**. The first actuator **208**, which may be a linear actuator, a rotary actuator, a stepper motor, or the like, is configured to move the platen **206** in a scanning motion along a y-direction and/or a z-direction. In one embodiment, the first actuator **208** is further configured to tilt the platen **206** such that the substrate **210** is positioned at a tilt angle β relative to the x-axis of the ion beam chamber **202**. The angle α and tilt angle β result in an ion beam angle ϑ relative to the datum plane **218**. To form fins having a slant angle ϑ' relative the datum plane **218**, the ion beam source **204** generates an ion beam **216** and the ion beam chamber **202** directs the ion beam **216** through the segmented source **230** towards the substrate **210** at the angle α. The first actuator **208** positions the platen **206** so that the ion beam **216** contacts the grating material **212** at the ion beam angle ϑ and etches fins having a slant angle ϑ' on desired portions of the grating material **212**. A second actuator **220** may also be coupled to the platen **206** to rotate the substrate **210** about the x-axis of the platen **206** to control the slant angle ϑ' of gratings. Advantageously, various different regions of the substrate **210** may be exposed to the ion beam **216** by rotating the substrate **210** without otherwise changing apparatus of the ion beam chamber **202**.

FIG. **3** illustrates a side sectional view of an electrode assembly **300** according to an embodiment of the disclosure. In one embodiment, the electrode assembly **300** may be adapted as a graded lens configuration. In another embodiment, which may be combined with other embodiments, the electrode assembly **300** includes one or more assemblies of electrodes. For example, the electrode assembly **300** may include a set of entrance electrodes **302**, one or more sets of suppression electrodes **304** (or focusing electrodes), and a set of exit electrodes **306**. The exit electrodes **306** may be referred to as ground electrodes. Each set of electrodes **302**, **304**, **306** may be positioned with a space or gap to enable passage or an ion beam **216** (e.g., a ribbon beam, a spot beam, or full substrate-size beam) therethrough.

In some embodiments, the entrance electrodes **302**, the suppression electrodes **304**, and the exit electrodes **306** are be provided in a housing **308**. A pump **310** may be directly or indirectly connected to the housing **308**. The pump **310** may be a vacuum pump for providing a high-vacuum environment or other controlled environment of a different pressure. For example, the pump **310** may generate a sub-atmospheric pressure environment within the housing **308** or the pump **310** may maintain an approximately atmospheric pressure environment within the housing **308**. In other embodiments, which may be combined with other embodiments, the housing **308** may include one or more dielectric members **314**. The dielectric members **314** function to electrically isolate the housing **308** from other components of the electrode assembly **300**.

The set of entrance electrodes **302** and exit electrodes **306** may include two conductive pieces electrically coupled to each other. In other embodiments, the assembly of entrance electrodes **302** are a single-piece structure with an aperture for the ion beam **216** to pass therethrough. In some embodiments, upper and lower portions of suppression electrodes **304** may have different potentials (e.g., in separate/discreet conductive portions) in order to deflect the ion beam **216** passing therethrough. Although the electrode assembly **300** is depicted as a seven (7) element lens configuration (e.g., with five (5) sets of suppression electrodes **304**), it should be appreciated that any number of elements (or electrodes) may be utilized. For example, in some embodiments, the electrode assembly **300** may utilize a range of three (3) to ten (10) electrode sets.

Electrostatic focusing of the ion beam **216** may be achieved by using several thin electrodes (e.g., the suppression electrodes **304**) to control grading of potential along a path the ion beam **216**. As a result, the use of input ion beams **216** may be used in an energy range, for example 100 Volts to 3,000 Volts, that may enable higher-quality beams, even for very low energy output beams. In one embodiment, as the ion beam **216** passes through the electrodes of the electrode assembly **300**, the ion beam **216** may be decelerated from 6 keV to 0.2 keV and deflected at about 15 degrees to about 30 degrees, or greater, by the electrodes of the electrode assembly **300**. In one example, the energy ratio may be 30/1.

It should be appreciated that separating and independently controlling deceleration, deflection, and/or focus may be accomplished by one or a combination of moving the electrodes (e.g., the entrance electrode **302**, suppression electrodes **304**, and the exit electrode **306**) with respect to a central ray trajectory (e.g. the datum plane **218** of FIG. **2**) of the ion beam **216**, and varying deflection voltages electrodes (e.g., the entrance electrode **302**, suppression electrodes **304**, and the exit electrode **306**) along the central ray trajectory of the ion beam **216** to reflect beam energy at each point along the central ray trajectory at a deflection angle α. The symmetry of the electrodes with respect to the central ray trajectory of the ion beam **216** is where the ends of upper and lower electrodes closest to the ion beam **216** may be maintained at equal (or near-equal) perpendicular distances

from the central ray trajectory of the ion beam **216**. For example, a difference in voltages on electrodes above and below the ion beam **216** may be configured so that a deflection component of the electric field may be a fixed ratio/factor of the beam energy at that point (which may vary along the electrodes or lenses).

FIG. **4**A illustrates a schematic side view of a segmented ion source **230** according to an embodiment of the disclosure. The segmented ion source **230** is coupled to or otherwise integrated with the ion beam chamber **202** and segments **412** of the segmented ion source **230** are aligned or otherwise positioned to receive the ion beam **216** from the beam source **204**.

The segmented ion source **230** includes a housing **402** having a first wall **404**, a second wall **406**, a third wall **414**, and a fourth wall **416**. In one embodiment, the first wall **404** and second wall **406** are oriented substantially parallel to one another. The third wall **414** and fourth wall **416** are also substantially parallel to one another and extend between the first wall **404** and the second wall **406**. While the above-described orientation of walls **404**, **406**, **414**, **416** may be beneficially employed, it is contemplated that other wall configurations may be utilized.

In one embodiment, the first wall **404** is coupled to the ion beam chamber **202** and the segments **412** are positioned adjacent to and opposite the platen **206**. The segments **412** are formed in the second wall **406** and include a plurality of surfaces **408**, **410**. A first surface **408** is angled relative to a datum plane defined by the second wall **406**. The angle of the first surface **408** may be selected between about 1 degree and about 60 degrees from the datum plane defined by the second wall **406**. Thus, the first surface **408** extends from the second wall **406** and an angle into the housing **402** and toward the first wall **404**.

A second surface **410** extends between the first surface **408** and the second wall **406**. The second surface **410** is oriented substantially normal to the datum plane defined by the second wall **406**. However, it is contemplated that the second surface **410** may be oriented at non-normal angles with respect to the datum plane defined by the second wall **406**. While three segments **412** are illustrated, it is contemplated that a greater or lesser number of segments **412** may be utilized to modulate the ion beam **216** depending upon the area of the substrate **210** desired to be etched. Additionally, it is contemplated that the magnitude of the surfaces **408**, **410** may be changed relative to one another to modulate angle characteristics of the ion beam **216**.

In one embodiment, the electrode assembly **300** is positioned within the housing **402** adjacent to the first surface **408** of the second wall **406**. For example, the electrode assembly **300** may be coupled to the first surface **408** within the housing **402**. As depicted in in FIG. **3**, the housing **308** of the electrode assembly **300** may include a shape selected to match or interface with the angle of the first surface **408**. The first surface **408** may also include one or more openings **418** therein adjacent to where the electrode assembly **300** is positioned to enable the ion beam **216** to pass through the first surface **408**. Similarly, the first wall **404** may also have one or more openings **420** formed therein and the openings **420** formed in the first wall **404** may be aligned with one or both of the openings **418** formed in the first surface **408** or the electrode assembly **300**. Accordingly, the ion beam **216** may propagate through the first wall **404** at an orientation substantially normal to a datum plane defined by the first wall **404** but exit the housing **402** through the first surface **408** of the second wall **406** at a predetermined angle.

FIG. **4**B illustrates a schematic side view of a segmented ion source **230** according to an embodiment of the disclosure. The segmented ion source **230** is coupled to or otherwise integrated with the ion beam chamber **202** and segments **412** of the segmented ion source **230** are aligned or otherwise positioned to receive the ion beam **216** from the beam source **204**.

The segmented ion source **230** includes a housing **422** having a first wall **424**, a second wall **426**, a third wall **434**, and a fourth wall **436**. In one embodiment, the first wall **424** and second wall **426** are oriented substantially parallel to one another. The third wall **434** and fourth wall **436** are also substantially parallel to one another and extend between the first wall **424** and the second wall **426**. While the above-described orientation of walls **424**, **426**, **434**, **436** may be beneficially employed, it is contemplated that other wall configurations may be utilized.

In one embodiment, the first wall **424** is coupled to the ion beam chamber **202** and the segments **412** are positioned adjacent to and opposite the platen **206**. The segments **412** are formed in the second wall **426** and include a plurality of surfaces **428**, **430**, **432**. A first surface **428** is angled relative to a datum plane defined by the second wall **426**. The angle of the first surface **428** may be selected between about 1 degree and about 60 degrees from the datum plane defined by the second wall **426**. Thus, the first surface **428** extends from the second wall **426** and an angle into the housing **422** and toward the first wall **424**.

A second surface **430** extends between the first surface **428** and a third surface **432**. The second surface **430** is oriented substantially parallel to the datum plane defined by the second wall **426**. However, it is contemplated that the second surface **430** may be oriented at non-parallel angles with respect to the datum plane defined by the second wall **426**. The third surface **432** extends from the second surface **430** to the second wall **426** at an adjacent first surface **428**. The third surface **432** is angled with respect to the datum plan defined by the second wall **426**. In one example, the angle of the third surface **432** is substantially similar to the angle of the first surface **428**. Alternatively, the angle of the third surface **432** may be different from the angle of the first surface **428**. The magnitude of the second surface **430** spaces the third surface **432** from the first surface **428**. Accordingly, it is contemplated that the first surface **428** may be oriented at a wider range of angles to enable angled etching of the substrate **210**. Additionally, the spacing and orientation of the third surface **432** from the first surface **428** is believed to enable a larger area of the substrate **210** to be processed at a time. While three segments **412** are illustrated, it is contemplated that a greater or lesser number of segments **412** may be utilized to modulate the ion beam **216** depending upon the area of the substrate **210** desired to be etched. It is also contemplated that the magnitude of the surfaces **428**, **430**, **432** may be changed relative to one another to modulate angle characteristics of the ion beam **216**.

In one embodiment, the electrode assembly **300** is positioned within the housing **422** adjacent to the first surface **428** of the second wall **426**. For example, the electrode assembly **300** may be coupled to the first surface **428** within the housing **422**. As depicted in in FIG. **3**, the housing **308** of the electrode assembly **300** may include a shape selected to match or interface with the angle of the first surface **428**. The first surface **428** may also include one or more openings **438** therein adjacent to where the electrode assembly **300** is positioned to enable the ion beam **216** to pass through the first surface **428**. Similarly, the first wall **424** may also have

one or more openings **440** formed therein and the openings **440** formed in the first wall **424** may be aligned with one or both of the openings **438** formed in the first surface **428** or the electrode assembly **300**. Accordingly, the ion beam **216** may propagate through the first wall **424** at an orientation substantially normal to a datum plane defined by the first wall **424** but exit the housing **422** through the first surface **428** of the second wall **426** at a predetermined angle.

FIG. **4**C illustrates a schematic side view of a segmented ion source **230** according to an embodiment of the disclosure. The segmented ion source **230** is coupled to or otherwise integrated with the ion beam chamber **202** and segments **412** of the segmented ion source **230** are aligned or otherwise positioned to receive the ion beam **216** from the beam source **204**.

The segmented ion source **230** includes a housing **442** having a first wall **444**, a second wall **446**, a third wall **454**, and a fourth wall **456**. In one embodiment, the first wall **444** and second wall **446** are oriented substantially parallel to one another. The third wall **454** and fourth wall **456** are also substantially parallel to one another and extend between the first wall **444** and the second wall **446**. While the above-described orientation of walls **444**, **446**, **454**, **456** may be beneficially employed, it is contemplated that other wall configurations may be utilized.

In one embodiment, the first wall **444** is coupled to the ion beam chamber **202** and the segments **412** are positioned adjacent to and opposite the platen **206**. The segments **412** are formed in the second wall **446** and include a plurality of surfaces **448**, **450**, **452**. A first surface **428** is angled relative to a datum plane defined by the second wall **446**. The angle of the first surface **448** may be selected between about 1 degree and about 60 degrees from the datum plane defined by the second wall **446**.

A second surface **450** extends between the first surface **448** and a third surface **452**. The second surface **450** is oriented substantially parallel to the datum plane defined by the second wall **446**. However, it is contemplated that the second surface **450** may be oriented at non-parallel angles with respect to the datum plane defined by the second wall **446**. The third surface **452** extends from the second wall **446** at a non-normal angle relative to the datum plane defined by the second wall **446**. In this embodiment, the third surface **452** extends from the second wall **446** at an angle out of the housing **422** and away the first wall **444**. Alternatively, the third surface **452** may extend from the second wall **446** at an angle normal to the datum plane defined by the second wall **446**.

In one example, the angle of the third surface **452** is substantially similar to the angle of the first surface **448**. Alternatively, the angle of the third surface **452** may be different from the angle of the first surface **448**. The magnitude of the second surface **450** spaces the third surface **452** from the first surface **448**. Accordingly, it is contemplated that the first surface **448** may be oriented at a wider range of angles to enable angled etching of the substrate **210**. Additionally, the spacing and orientation of the third surface **452** from the first surface **448** is believed to enable a larger area of the substrate **210** to be processed at a time. While three segments **412** are illustrated, it is contemplated that a greater or lesser number of segments **412** may be utilized to modulate the ion beam **216** depending upon the area of the substrate **210** desired to be etched. It is also contemplated that the magnitude of the surfaces **448**, **450**, **452** may be changed relative to one another to modulate angle characteristics of the ion beam **216**.

In one embodiment, the electrode assembly **300** is positioned within the housing **442** adjacent to the first surface **448** of the second wall **446**. For example, the electrode assembly **300** may be coupled to the first surface **448** within the housing **442**. As depicted in in FIG. **3**, the housing **308** of the electrode assembly **300** may include a shape selected to match or interface with the angle of the first surface **448**. The first surface **448** may also include one or more openings **458** therein adjacent to where the electrode assembly **300** is positioned to enable the ion beam **216** to pass through the first surface **448**. Similarly, the first wall **444** may also have one or more openings **460** formed therein and the openings **460** formed in the first wall **444** may be aligned with one or both of the openings **458** formed in the first surface **448** or the electrode assembly **300**. Accordingly, the ion beam **216** may propagate through the first wall **444** at an orientation substantially normal to a datum plane defined by the first wall **444** but exit the housing **442** through the first surface **448** of the second wall **446** at a predetermined angle.

The segmented ion source **230** coupled to the ion beam chamber **202** utilizes the segments **412** and electrode assembly **300** to modulate the angle of the ion beam **216** generated by the beam source **204**. The segments **412** and electrode assembly **300** may be positioned or otherwise oriented in a manner to enable angled etching of the substrate **210**. It is contemplated that the segmented ion source **230** may be modular in nature and different segmented ion sources may be interchanged on the ion beam chamber **202** to facilitate different angled etching profiles of the substrate **210**. The segmented ion source **230** may also be utilized to reduce processing complexity associated with movement of the platen **206** by reducing variables associated with movement of the platen **206** by the actuators **208**, **220**. The segmented ion source **230** may also be utilized in combination with movement of the platen **206** via the actuators **208**, **220** to enable more complex or precise angled etching profiles of the substrate **210**.

FIG. **5**A illustrates a schematic, plan view of a filter plate **500** according to an embodiment of the disclosure. FIG. **5**B illustrates a schematic side view of the segmented ion source **230** of FIG. **3**C with filter plates **500** coupled thereto according to an embodiment of the disclosure. The filter plate **500** is adapted to interface with and couple to the segmented ion source **230** to modulate the intensity or distribution of the ion beam **216** passing through the filter plate **500**.

The filter plate **500** includes a body **502** having a plurality of apertures **506**, **510**, **514** formed therein. The body **502** is fabricated from a material of sufficient thickness which is resistant or inert to ion beam bombardment and prevents ions from passing threrethrough. The apertures **506**, **510**, **514** extend through the body **502** to form openings through which the ion beam **216** passes. A first region **504** of the body **502** includes a first plurality of apertures **506**. Although the first region **504** is illustrated as occupying approximately one third of the body **502**, it is contemplated that the first region **504** may include a greater or lesser portion of the body **502**. The first plurality of apertures **506** are illustrated as being substantially circle-shaped with an approximately even distribution between adjacent apertures of the first plurality of apertures **506**. However, any number, shape, orientation, spacing, or arrangement of the first plurality of apertures **506** may be utilized to modulate the intensity or distribution of the ion beam **216** passing through the first plurality of apertures **506**.

A second region **508** of the body **502** includes a second plurality of apertures **510**. Although the second region **508**

is illustrated as occupying approximately one third of the body **502**, it is contemplated that the second region **508** may include a greater or lesser portion of the body **502**. The second plurality of apertures **510** are illustrated as being substantially oval-shaped with an approximately even distribution between adjacent apertures of the second plurality of apertures **510**. However, any number, shape, orientation, spacing, or arrangement of the second plurality of apertures **510** may be utilized to modulate the intensity or distribution of the ion beam **216** passing through the second plurality of apertures **510**.

A third region **512** of the body **502** includes a third plurality of apertures **514**. Although the third region **512** is illustrated as occupying approximately one third of the body **502**, it is contemplated that the third region **512** may include a greater or lesser portion of the body **502**. The third plurality of apertures **514** are illustrated as being substantially circle-shaped with an approximately even distribution between adjacent apertures of the third plurality of apertures **514**. However, any number, shape, orientation, spacing, or arrangement of the third plurality of apertures **514** may be utilized to modulate the intensity or distribution of the ion beam **216** passing through the third plurality of apertures **514**.

In one example, the first plurality of apertures **506** occupy an area of the body **502** in the first region **504** which is greater than an area of either the second plurality of apertures **510** and/or the third plurality of apertures **514**. In other words, the ion beam **216** passing through the first region **504** of the body **502** is less obstructed when compared to the second region **508** and/or the third region **512**. Thus, the ion beam **216** passing through the first region **504** may contact a first region of the substrate **210** with a greater amount and intensity of ions. The second region **508** and third region **512** have different arrangements, spacing, and shapes of apertures **510**, **514**, respectively, and modulate the ion beam **216** passing threrethrough such that the amount and intensity of ions contacting the substrate **210** in second and third regions, respectively, are different from the amount and intensity of ions which were modulated by the first region **504**.

In one example, an angled etching profile on the substrate **210** in a first region is generated by the ion beam **216** passing through the first plurality of apertures **506**, an angled etching profile on the substrate **210** in a second region is generated by the ion beam **216** passing through the second plurality of apertures **510**, and an angles etching profile on the substrate **210** in a third region is generated by the ion beam **216** passing through the third plurality of apertures **514**. The different etching profiles of fins or gratings formed on the substrate are generated by the regions **514**, **518**, **518** of the filter plate **500**. It is contemplated that various aperture designs, shapes, spacing, density, etc. incorporated in the filter plate **500** may be utilized to modulate the ion beam **216** characteristics and thus enable different angled etching profiles on a substrate while utilizing a single ion beam chamber **202** and/or ion beam source **204**.

FIG. **5**B illustrates a schematic side view of the segmented ion source **230** of FIG. **4**C with filter plates **500** coupled thereto according to an embodiment of the disclosure. The filter plates **500** are coupled to the first surface **448** of the segmented ion source **230**. The filter plates **500** may be coupled to the first surface **448** by mechanical fastening apparatus, such as bolts, screws, or the like, or may be integrated into the first surface **448** such that the first surface **448** and the filter plate **500** is a unitary structure. In one embodiment, the filter plates **500** are disposed at an angle relative to the datum plane defined by the second wall **446**. The electrode assemblies **300** are disposed within the housing **442** adjacent to the first surface **448**. The ion beam **216** entering the opening **460** is modulated, curved, or angled by the electrode assemblies **300** and the angled ion beam **216** passes through the opening **458** where the ion beam **216** is modulated in intensity and/or distribution by the filter plates **500**. It is contemplated that the ion beam **216**, which has been modulated by the filter plate **500**, has a plurality of different characteristics which etch the substrate **210** differently depending upon which region **504**, **508**, **512** of the filter plate **500** the ion beam **216** passes through. Such different etching profiles and characteristics enabled by the filter plate **500** may be utilized to etch fins or gratings on the substrate **210** with different depths or other characteristics.

While the segmented ion source **230** of FIG. **4**C is illustrated with the filter plates **500**, it is contemplated that the filter plates **500** may be advantageously utilized in combination with the segmented ion source **230** of FIGS. **4**A and **4**B. For example, the filter plate **500** may be coupled to the first surface **408** of the segmented ion source **230** of FIG. **4**A or the filter plate **500** may be coupled to the first surface **428** of the segmented ion source **230** of FIG. **4**B. Depending upon the configuration of the segmented ion source **230**, the filter plate **500** and the electrode assembly **300** may be disposed in various different orientations than those illustrated. For example, the electrode assembly **300** and filter plate **500** may be utilized on opposing sides of the third surfaces **432**, **452** of the segmented ion source **230** of FIG. **4**B and FIG. **4**C, respectively.

FIG. **6** illustrates a schematic, cross-sectional view of an electron beam etching system **600** according to an embodiment of the disclosure. One example of an electron beam etching system **600** is the SYM3™ apparatus available from Applied Materials, Inc., Santa Clara, Calif., which may be modified in accordance with various aspects of the disclosure. It is contemplated that other suitable apparatus from other manufacturers may also benefit from the embodiments described herein.

The system **600** includes a chamber body **602** which encloses or otherwise defines a process volume **640**. The chamber body **602** may be fabricated from suitable materials such as stainless steel, aluminum, or alloys and combinations thereof. A first liner **636** is disposed adjacent to the chamber body **602** to protect the chamber body **602** from the processing environment of the process volume **640**. In one example, the first liner **636** may be fabricated from process inert or resistant materials, such as a ceramic material or other suitable materials, for example, silicon containing material, carbon containing material, silicon carbon material, or silicon oxide containing materials.

A second liner **638** is also disposed adjacent to the chamber body **602** and the second liner **638** is positioned to substantially surround the process volume **640**. In one embodiment, the second liner **638** is fabricated from a dielectric material, such as quartz or a ceramic material. In another embodiment, the second line **638** is fabricated from materials similar to those utilized to fabricate the first liner **636**. The liners **636**, **638** may also be coated with various materials similar to those utilized to fabricate the liners **636**, **638** and may additionally be coated with materials such as aluminum oxide materials, yttrium oxide materials, or zirconium materials. In certain embodiments, one or both of the first liner **636** and the second liner **638** are optional. In such embodiments, the chamber body **602** may be fabricated and configured to function without liners.

An exhaust port **648** is formed through the second liner **636** and the chamber body **602**. The exhaust port **648** is

formed through the second liner **636** and the chamber body **602** as a location below a pedestal **604** disposed in the process volume **640**. A pump **650** is in fluid communication with the process volume **640** via the exhaust port **648** and a pump port **646** which surrounds the pedestal **604**. The pump **650** enables exhausting of materials from the process volume **640**. A lid **616** is coupled to or otherwise integrated with the chamber body **602** opposite the pedestal **604**.

The pedestal **604** includes an electrode **606** disposed therein. In one embodiment, the electrode **606** is a chucking apparatus, such as an electrostatic chuck, for securing a substrate **614** thereto during processing of the substrate **614**. A conduit **610**, such as an electrical conduit or the like, is coupled between the electrode **606** and a power source **612**. Power from the power source **612** may be utilized to bias the electrode **606** to either chuck the substrate **614** to the electrode **606** or influence bombardment of electrons on the substrate **614**. The electrode **606** and the conduit **610** are surrounded by an insulating material **608**, such as a dielectric material, to electrically isolate the electrode **606** and conduit **610** from the pedestal **604**.

An actuator **644** is coupled to the pedestal **604** and is configured to raise and lower the pedestal **604** within the process volume **640**. The actuator **644** may also cause the pedestal to rotate about a vertical axis. A bellows assembly **642** is disposed about a portion of the pedestal **604** which extends through the chamber body **602** and the bellows assembly **642** is operable to enable vertical movement of the pedestal **604** while maintaining a process environment of the process volume **640**. For example, the bellows assembly **642** may be operable to maintain a sub-atmospheric pressure process environment within the process volume **640** while the pedestal **604** is raised or lowered.

A first gas source **630** is in fluid communication with the process volume **640** via a first conduit **628** extending through the chamber body **602**. In one embodiment, the first gas source **630** is an inert gas source which supplies an inert gas, such as argon or helium, to the process volume **640**. A second gas source **634** is in fluid communication with the process volume **640** via a second conduit **632** extending through the chamber body **602**. In one embodiment, the second gas source **634** is a process gas source which supplies a process gas, such as a chlorine containing gas, a fluorine containing gas, a bromine containing gas, oxygen containing gas, or the like, to the process volume **640**.

In an alternate embodiment, the first gas source **630** and second gas source **634** may be in fluid communication with the process volume **640** via an electrode **618**. In this embodiment, the conduits **628**, **632**, respectively, are coupled between the gas sources **630**, **634** and the process volume **640** via the electrode **618**. For example, the conduits **628**, **632** may extend through the electrode **618** or the second electrode **618** may include a plurality of apertures to function as a gas delivery showerhead. The apertures may be disposed on the angled surfaces **621** to provide a flow patch of the gas from the gas sources **630**, **634** into the process volume **640**.

The electrode **618** is coupled to the lid **616** and the electrode **618** is oriented opposite the electrode **606**. The electrode **618** includes a segmented surface **620** which includes a plurality of angled surfaces **621**. In one embodiment, the substrate **614** is disposed on the electrode **606** of the pedestal **604** in a substantially horizontal orientation. In such an embodiment, the angled surface **621** are oriented in an angled and non-parallel orientation relative to either the substrate **614** or a major axis (horizontal) of the electrode **606**. In the illustrated embodiment, the angled surface **621** of the segmented surface **620** are substantially uniform across the electrode **618**. Alternatively, the angled surfaces **621** of the segmented surface **620** may be non-uniform. For example, the angled surface **621** may have different angles or may be positioned, spaced, or otherwise oriented in a non-uniform manner to enable fabrication of waveguides with non-uniform gratings.

A conduit **624**, such as an electrical conduit or the like, is coupled between the electrode **618** and a power source **626**. The electrode **618** and conduit **624** are surrounded by an insulating material **622**, such as a dielectric material, to electrically isolate the electrode **618** and conduit **624** from the lid **616**.

In operation, a plasma is generated in the process volume **640** by various bulk and surface processes, for example, by capacitive coupling. In this embodiment, the power source **626** is a radio frequency (RF) power source. The power source **626** is operable to generate RF power having a frequency of about 13.56 MHz or about 2 MHz, depending upon desired electron beam characteristics. For example, RF power is applied in a constant or pulsed manner to the electrode **618** and the electrode **606** is biased relative to the electrode **618**. In another example, RF power is applied to the electrode **618** and the electrode **606** remains unbiased. It is believed that ions generated by a capacitively coupled plasma are influenced by an electric field that encourages bombardment of the electrode **618** by the ions generated from the plasma. Other plasma generation processes, such as a hollow cathode arrangement, direct current electrode biasing, or electron beam plasma generation processes may be utilized in accordance with the embodiments described herein.

Ion bombardment energy of the electrode **618** and density of the plasma formed in the process volume **640** are controlled, at least in part, by the power source **626** (e.g. RF power source). Ion bombardment of the electrode **618** is believed to heat the electrode **618** and cause the electrode **618** to emit secondary electrons. In one embodiment, the electrode **618** is fabricated from a process compatible material having a high secondary electron emission coefficient, such as silicon, carbon, silicon carbon material, or silicon oxide materials. The electrode **618** may also be fabricated from a metal oxide material such as aluminum oxide, yttrium oxide, or zirconium oxide.

Energetic secondary electrons, which have a negative charge, are emitted from the segmented surface **620** at angles influenced by the angled surface **621** and accelerated away from the electrode **618** due to biasing of the electrode **618**. In this example, the electrode **618** may be negatively biased. The angled surfaces **621** of the segmented surface **620** are oriented at an angle between about 1° and about 75° relative to a horizontal datum plan defined by the electrode **606**. As such, an electron beam **660** is accelerated from the electrode **618** at a non-normal angle relative to the electrode **606** and the substrate **614**.

The flux of energetic electrons from the segmented surface **620** of the electrode **618** is an electron beam. A beam energy of the electron beam **660** is approximately equal to the ion bombardment energy of the electrode **618**. In one embodiment, the plasma potential is greater than the potential of the electrode **618** and the energetic secondary electrons emitted from the electrode **618** are further accelerated by a sheath voltage of the plasma as the secondary electrons of the electron beam **660** traverse through the plasma formed in the process volume **640**.

At least a portion of the electron beam **660**, comprised of the secondary electron flux emitted from the electrode **618**

due to energetic ion bombardment of the segmented surface **620**, propagates through the process volume **640** and contacts the substrate **614** to etch the substrate **614**. In one embodiment, the electron beams **660**, in addition to the capacitively generated plasma, generate chemically reactive radicals and ions which may adsorb to the surface of the substrate **614** and form a chemically reactive layer on the surface of the substrate **614**.

FIG. **7**A illustrates an angled etching process performed on the substrate **210** at a first position according to an embodiment of the disclosure. The substrate **210** has the grating material **212** disposed thereon and the patterned hardmask **213** is disposed on a surface **702** of the grating material **212**. In the illustrated embodiment, the substrate **210** is positioned a first distance **710** from the segmented ion source **230**, such as the segmented ion sources described with regard to the ion beam system **200** of FIGS. **2-5**B. In another embodiment, the substrate **210** may be processed by the system **600** utilizing the segmented surface **620** of the electrode **618** to generate an electron beam to etch the grating material **212**.

The ion beam **216** (or electron beam **660**) is directed toward the substrate **210** at a non-normal angle relative to a major axis of the substrate **210**. The patterned resist **213** exposes certain regions at the surface **702** of the grating material **212** which is etched by the ion beam **216** or electron beam **660**. As a result, recesses **704** and fins **706** are formed in the grating material **212**. While only two fins **706** and three recesses **704** are illustrated, the entire grating material **212** or desired portions thereof may be etched to form the recesses **704** and fins **706** depending upon the desired grating design for the waveguide to be fabricated. The fins **706** and recesses **704** collectively comprise a grating.

FIG. **7**B illustrates the substrate **210** of FIG. **7**A during the angled etching process at a second position according to an embodiment of the disclosure. The second position locates the substrate **210** a second distance **720** from the segmented ion source **230** (or segmented surface **620** of the electrode **618**). In one embodiment, the second distance **720** is less than the first distance **710**. In another embodiment, the second distance **720** is greater than the first distance **710**. The substrate **210** may be elevated from the first distance **710** to the second distance **720** by the platen **206** or pedestal **604** depending upon the apparatus **200**, **600** utilized. By changing the distance, etching and beam exposure characteristics are changed which result in different etching profiles of the grating material **212**. For example, certain recesses **704** may extend deeper into the grating material **212** from the surface **702** while other recesses are more shallow. Thus, the fins **706** may have different magnitudes and may modulate light propagating through the waveguide.

FIG. **8** illustrates operations of a method **800** for etching a waveguide with an angled ion beam according to an embodiment of the disclosure. At operation **802**, a waveguide (or substrate, such as the substrate **216**, to be fabricated into a waveguide) is positioned on a platen. In one example, the waveguide is positioned on the platen **206**. At operation **804**, the platen is positioned a first distance from an angled ion beam source. For example, the platen **206** is positioned a first distance **710** from the segmented ion source **230**.

At operation **806**, ions are projected from the angled ion beam source toward the waveguide to form fins having a first depth. At operation **808**, the platen is positioned a second distance from the angled ion beam source. The second distance is different from the first distance. In one example, the platen **206** is positioned the second distance **720** from the segmented ion source **230**. At operation **810**, ions are projected from the angled ion beam source toward the waveguide to form fins having a second depth different from the first depth. The depth of the fins **706** concerns the distance the fins **706** extend into the grating material **212** and also correlates to the depth of the recesses **704**. In one embodiment, the second depth is greater than the first depth. In another embodiment, the second depth is less than the first depth.

FIG. **9** illustrates operations of a method **900** for etching a waveguide with an angled electron beam according to an embodiment of the disclosure. At operation **902**, a waveguide (or substrate, such as the substrate **216**, to be fabricated into a waveguide) is positioned on a platen. In one example, the waveguide is positioned on the pedestal **604**. At operation **904**, the platen is positioned a first distance from an angled electron beam source. For example, the pedestal **604** is positioned a first distance **710** from the segmented surface **620** of the electrode **618**.

At operation **906**, electrons are projected from the angled electron beam source toward the waveguide to form fins having a first depth. At operation **908**, the platen is positioned a second distance from the angled electron beam source. The second distance is different from the first distance. In one example, the pedestal **604** is positioned the second distance **720** from the segmented surface **620** of the electrode **618**. At operation **810**, electrons are projected from the angled electron beam source toward the waveguide to form fins having a second depth different from the first depth. The depth of the fins **706** concerns the distance the fins **706** extend into the grating material **212** and also correlates to the depth of the recesses **704**. In one embodiment, the second depth is greater than the first depth. In another embodiment, the second depth is less than the first depth.

The methods **800**, **900** respectively enable waveguide fabrication utilizing ion and electron beams. It is contemplated that the methods **800**, **900** may utilize a single etching cycle or multiple etching cycles. In one example, a 45° angled etching process may be performed about 14 times for a duration of about 300 seconds per time. In this example, an approximately 240 nm deep recess was formed with an etching rate of about 3 nm/min. In another example, a 60° angled etching process may be performed for about 18 times for a duration of about 300 seconds per time. In this example, an approximately 190 nm deep recess was formed with an etching rate of about 1.8 nm/min. However, it is contemplated that the apparatus and methods described herein may enable etching rates up to about 50 nm/min, depending upon the process variables of the ion or electron beam etching process and the desired angle of etch.

The methods **800**, **900** may be utilized for blanket substrate etches over substantially the entire substrate surface or for more localized etching processes when specified regions of the substrate are etched preferentially to other regions. The segmented ion source **230** and segmented surface **620** of the electrode **618** enable improved angled etching efficiency with ion and electron beams, respectively. It is also contemplated that segmented ions sources **230** and segmented surfaces **620** of the electrode **618** may be swapped out of their respective systems **200**, **600** to more efficiently change etching profiles of waveguides which embody gratings having a plurality of fin heights and recess or trench depths or with gratings of different angles.

While the foregoing is directed to embodiments of the present disclosure, other and further embodiments of the

disclosure may be devised without departing from the basic scope thereof, and the scope thereof is determined by the claims that follow.

What is claimed is:

1. An etching apparatus, comprising:

an ion beam chamber comprising an ion beam source;

a segmented ion source coupled to the ion beam chamber, the segmented ion source comprising a plurality of angled surfaces, wherein the segmented ion source comprises an ion source housing having a plurality of walls including a first wall and a second wall and the plurality of angled surfaces are disposed in the second wall;

a plurality of electrode assemblies, each electrode assembly aligned with one of the plurality of angled surfaces and comprising:

an electrode assembly housing having a first opening and a second opening opposite the first opening, the first and second openings partially defining a non-linear trajectory through the electrode assembly housing;

a first electrode disposed adjacent to the first opening; and

a second electrode disposed adjacent to the second opening and oriented at a non-parallel angle relative to the first electrode, wherein the first and second electrodes are configured to direct an ion beam along the non-linear trajectory between the first and second openings; and

a platen disposed opposite the segmented ion source, wherein the plurality of angled surfaces of the segmented ion source are each disposed at a non-normal angle relative to a supporting surface of the platen and the plurality of angled surfaces are disposed at the same non-normal angle in the second wall.

2. The apparatus of claim **1**, wherein the first wall of the ion source housing is coupled to the ion beam chamber and the second wall of the ion source housing is oriented substantially parallel to the first wall.

3. The apparatus of claim **1**, wherein a plurality of third openings is formed in the first wall and a plurality of fourth openings is formed in the plurality of angled surfaces, the plurality of third openings and plurality of fourth openings configured to allow passage of ion beams therethrough.

4. The apparatus of claim **1**, wherein the plurality of angled surfaces extend from the second wall into the ion source housing toward the first wall.

5. The apparatus of claim **1**, wherein the plurality of angled surfaces extend from the second wall outward from the ion source housing away from the first wall.

6. The apparatus of claim **1**, further comprising a filter plate coupled to the plurality of angled surfaces opposite the electrode assembly.

7. An etching apparatus, comprising:

an ion beam chamber comprising an ion beam source;

a segmented ion source coupled to the ion beam chamber, the segmented ion source comprising a plurality of angled surfaces;

a plurality of electrode assemblies, each electrode assembly aligned with one of the plurality of angled surfaces and comprising:

an electrode assembly housing having a first opening and a second opening opposite the first opening, the first and second openings partially defining a non-linear trajectory through the electrode assembly housing;

a first electrode disposed adjacent to the first opening; and

a second electrode disposed adjacent to the second opening and oriented at a non-parallel angle relative to the first electrode, wherein the first and second electrodes are configured to direct an ion beam along the non-linear trajectory between the first and second openings;

a platen disposed opposite the segmented ion source, wherein the plurality of angled surfaces of the segmented ion source are each disposed at a non-normal angle relative to a supporting surface of the platen; and

a filter plate coupled to the plurality of angled surfaces.

8. The apparatus of claim **7**, wherein the filter plate has a plurality of apertures formed therein.

9. The apparatus of claim **8**, wherein the filter plate comprises a plurality of regions having apertures having different morphologies.

10. The apparatus of claim **9**, wherein the aperture morphology differs in at least one of size, shape, spacing, density, or distribution.

11. An etching apparatus, comprising:

a segmented ion source coupled to an ion beam chamber, the segmented ion source comprising:

a first wall coupled to the ion beam chamber; and

a second wall disposed opposite the first wall, wherein a plurality of angled surfaces are formed in the second wall;

a plurality of electrode assemblies, wherein each electrode assembly is disposed adjacent to one of the plurality of angled surfaces and comprises:

an electrode assembly housing having a first opening and a second opening opposite the first opening, the first and second openings formed in non-parallel walls of the electrode assembly housing and partially defining a non-linear trajectory through the electrode assembly housing;

a plurality of entrance electrodes disposed adjacent to the first opening;

a plurality of grounding electrodes disposed adjacent to the second opening, each grounding electrode oriented at a first non-parallel angle relative to each of the plurality of entrance electrodes; and

a plurality of suppression electrodes disposed between the entrance electrodes and the grounding electrodes, at least one of the plurality of suppression electrodes oriented at a second non-parallel angle relative to each of the plurality of entrance electrodes, wherein the entrance electrodes, the grounding electrodes, and the suppression electrodes are configured to focus and direct an ion beam along the non-linear trajectory between the first and second openings; and

a filter plate disposed adjacent to each angled surface of the plurality of angled surfaces, wherein the filter plate is disposed opposite the electrode assembly.

12. The apparatus of claim **11**, wherein the filter plate has a plurality of apertures formed therein.

13. The apparatus of claim **11**, further comprising:

a platen disposed opposite the segmented ion source.

* * * * *