US011884076B2

(12) **United States Patent**
Zhang et al.

(10) **Patent No.: US 11,884,076 B2**
(45) **Date of Patent: Jan. 30, 2024**

(54) **FLUID MANAGEMENT SYSTEM FOR INKJET MACHINES**

(71) Applicant: **Applied Materials, Inc.**, Santa Clara, CA (US)

(72) Inventors: **Daihua Zhang**, Los Altos, CA (US); **Kazuya Daito**, Milpitas, CA (US); **Kang Luo**, Santa Clara, CA (US); **Elsa Massonneau**, Sunnyvale, CA (US); **Alexey Stepanov**, Sunnyvale, CA (US); **Ludovic Godet**, Sunnyvale, CA (US)

(73) Assignee: **Applied Materials, Inc.**, Santa Clara, CA (US)

(*) Notice: Subject to any disclaimer, the term of this patent is extended or adjusted under 35 U.S.C. 154(b) by 74 days.

(21) Appl. No.: **17/647,791**

(22) Filed: **Jan. 12, 2022**

(65) **Prior Publication Data**

US 2022/0355589 A1 Nov. 10, 2022

Related U.S. Application Data

(60) Provisional application No. 63/186,321, filed on May 10, 2021.

(51) **Int. Cl.**
B41J 2/165 (2006.01)
B41J 2/18 (2006.01)

(52) **U.S. Cl.**
CPC ***B41J 2/16552*** (2013.01); ***B41J 2/18*** (2013.01); *B41J 2002/16594* (2013.01)

(58) **Field of Classification Search**
CPC . B41J 2/16552; B41J 2/18; B41J 2002/16594
See application file for complete search history.

(56) **References Cited**

U.S. PATENT DOCUMENTS

2009/0040249 A1 2/2009 Wouters et al.
2010/0110155 A1 * 5/2010 Delueg B41J 2/19 347/93
2016/0052291 A1 * 2/2016 Pourtier B41J 2/175 347/85

FOREIGN PATENT DOCUMENTS

CA 2683335 A1 * 4/2010 ..... B41J 2/175
EP 2292433 A1 3/2011

OTHER PUBLICATIONS

European Search Report issued to Patent Application No. 22156134.3 dated Jul. 7, 2022.

* cited by examiner

Primary Examiner — Sharon Polk
(74) *Attorney, Agent, or Firm* — Patterson + Sheridan, LLP

(57) **ABSTRACT**

Embodiments described herein provide for a fluid management system and a method of utilizing the fluid management system. The fluid management system includes a servicing fluid management system and an ink management system. The servicing fluid management system and the ink management system run in parallel within an inkjet chamber. The ink management system supports the flow of inkjet materials between a waste tank, one or more inkjet material supply tanks, an ink management module, and the inkjet printer. The servicing fluid management system supports the flow of servicing fluids between the waste tank, one or more servicing fluid supply tanks, a servicing fluid management module, and the inkjet printer.

18 Claims, 4 Drawing Sheets

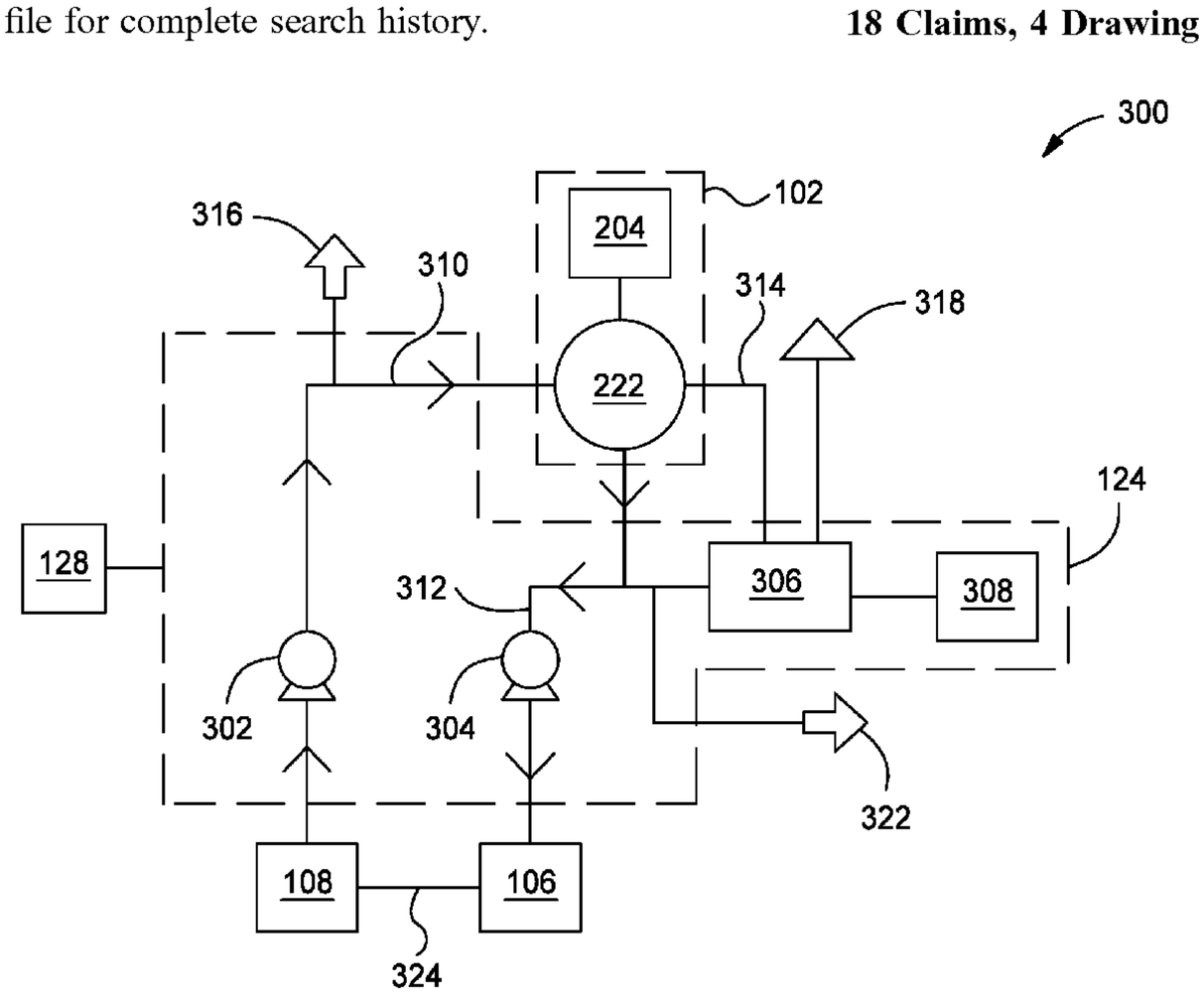

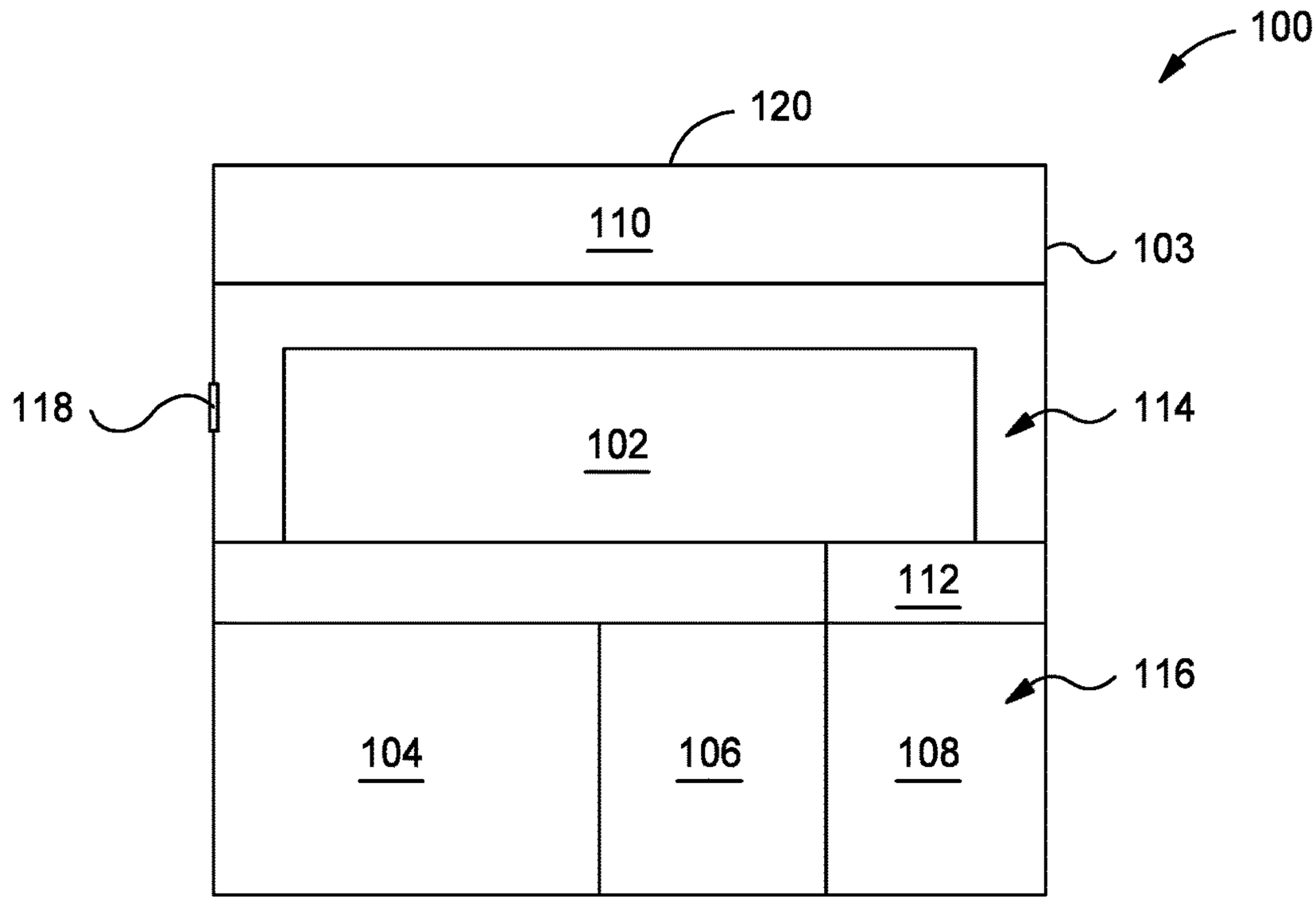
100
120
110
103
118
102
114
112
116
104
106
108

FIG. 1A

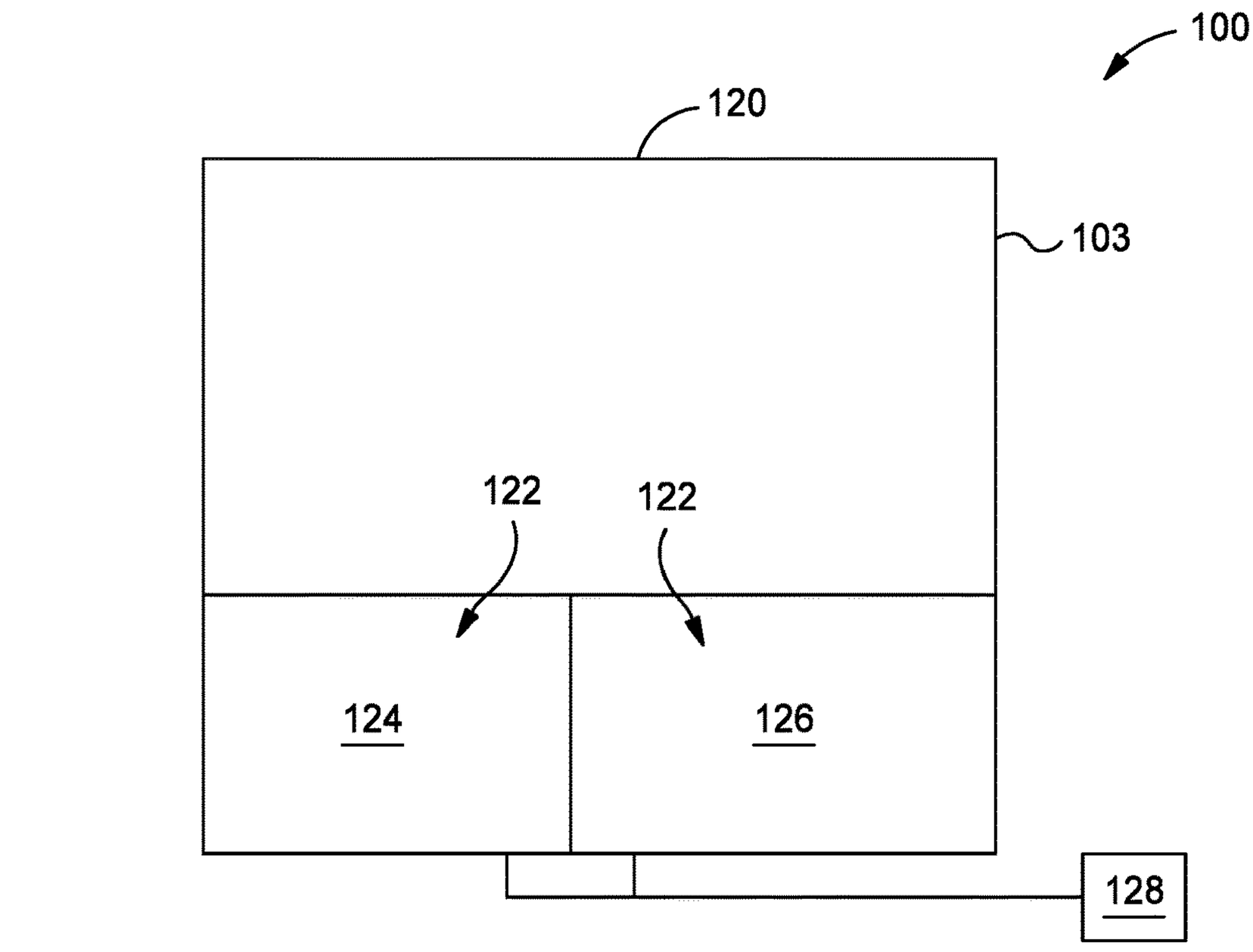
100
120
103
122
122
124
126
128

FIG. 1B

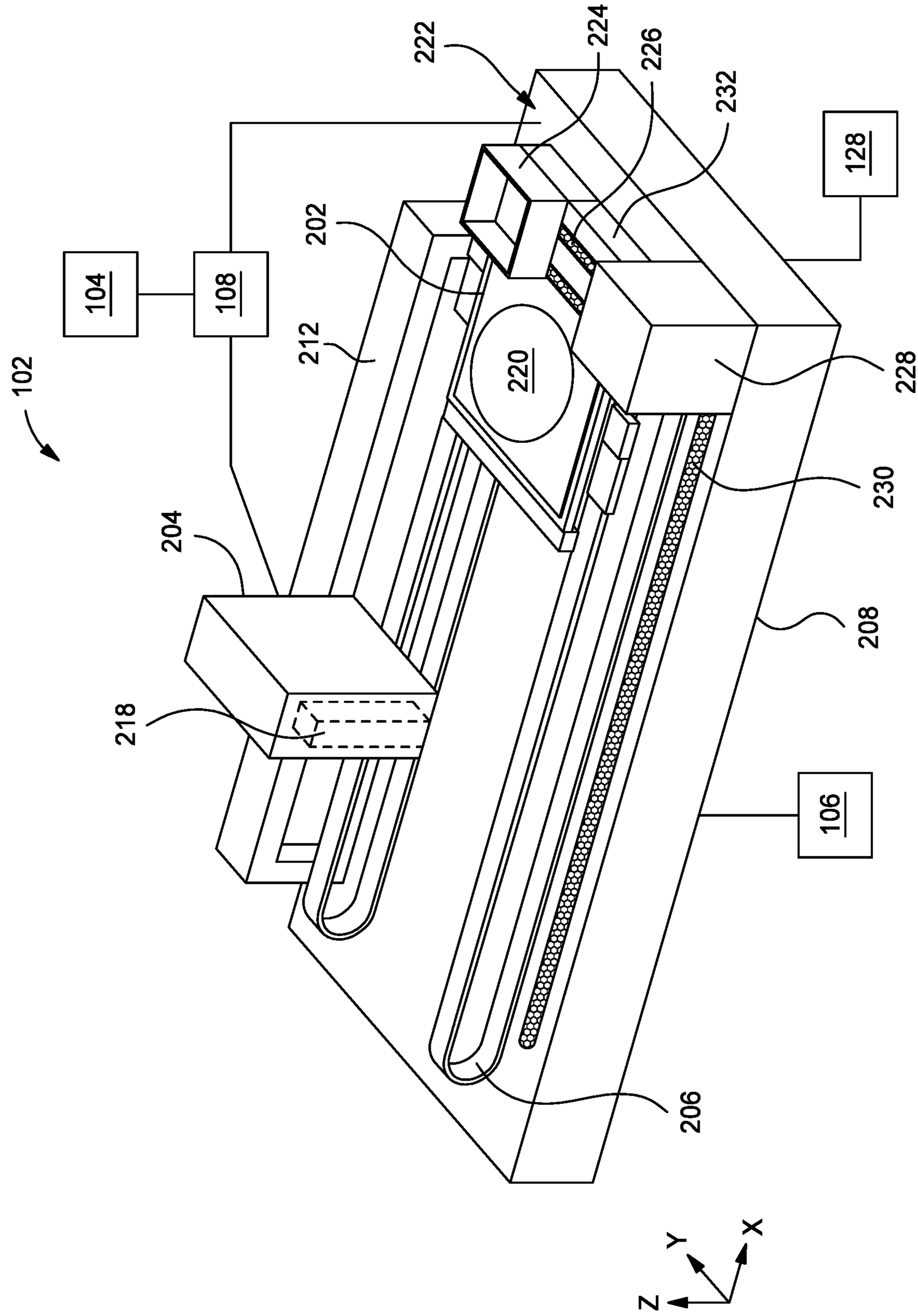
102
104
108
222
224
226
232
128
202
212
220
228
230
204
218
208
106
206
Y
X
Z

FIG. 2

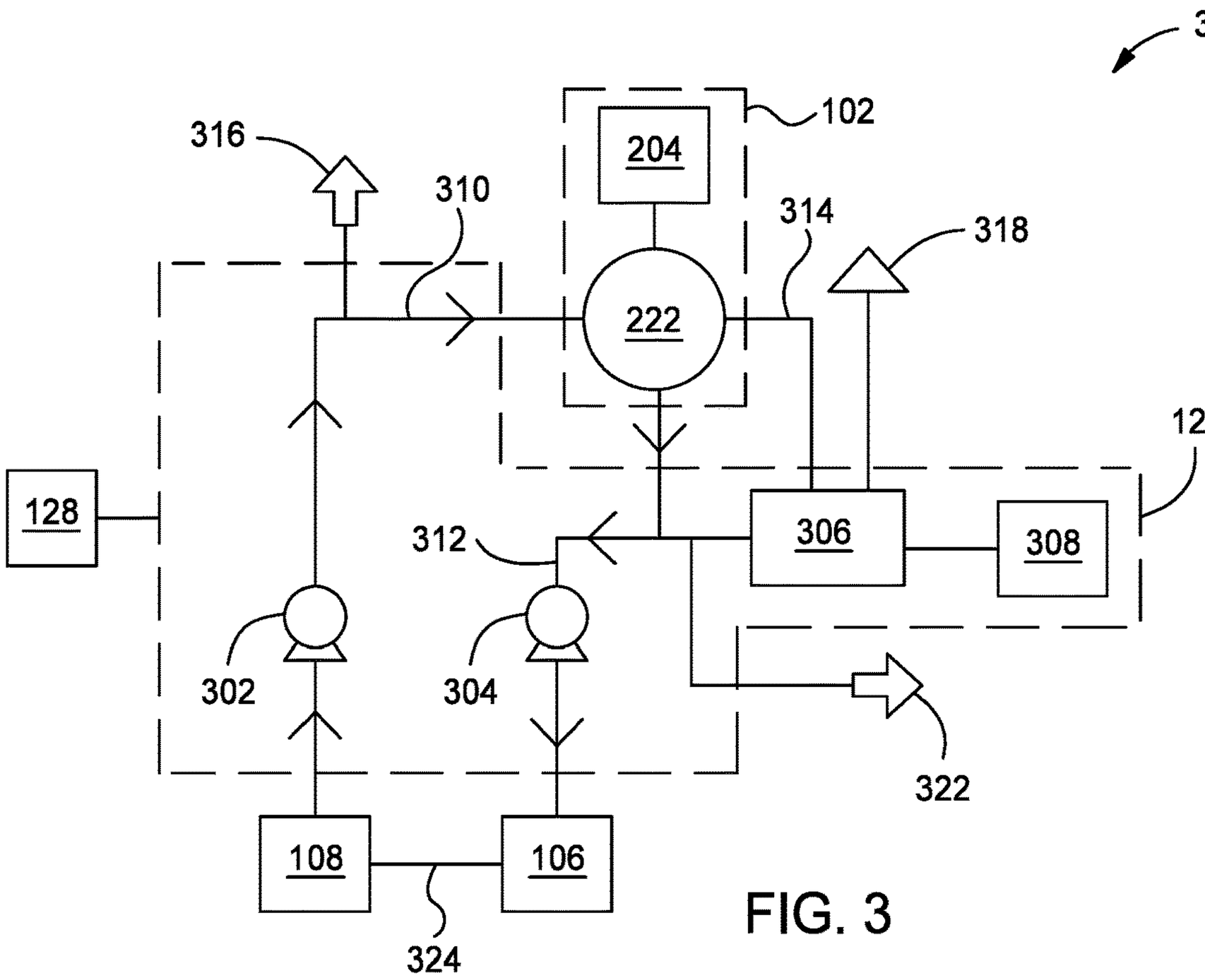
300
102
316
204
310
314
318
222
124
128
312
306
308
302
304
322
108
106
324

FIG. 3

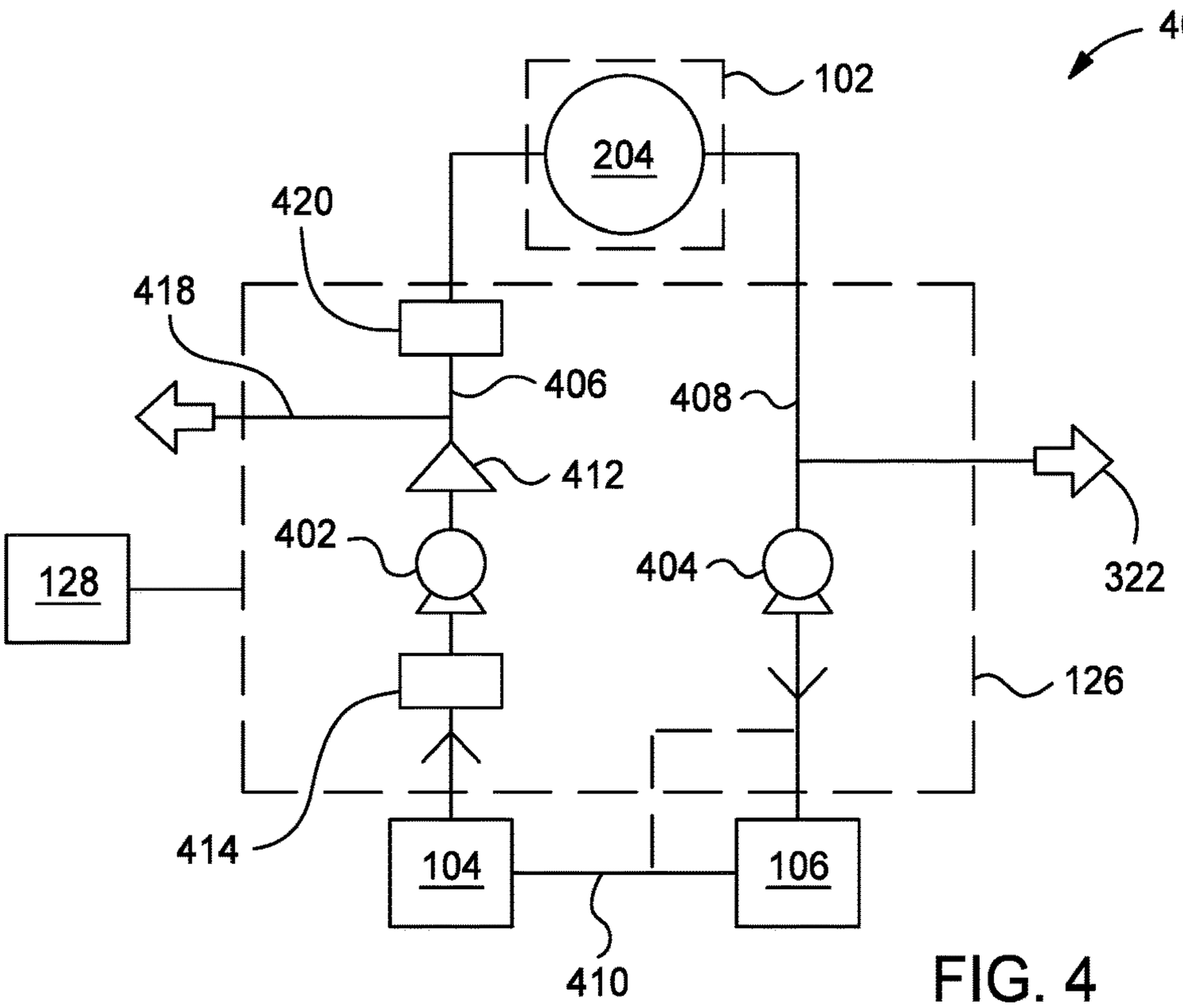
400
102
204
420
418
406
408
412
402
404
322
128
126
414
104
106
410

FIG. 4

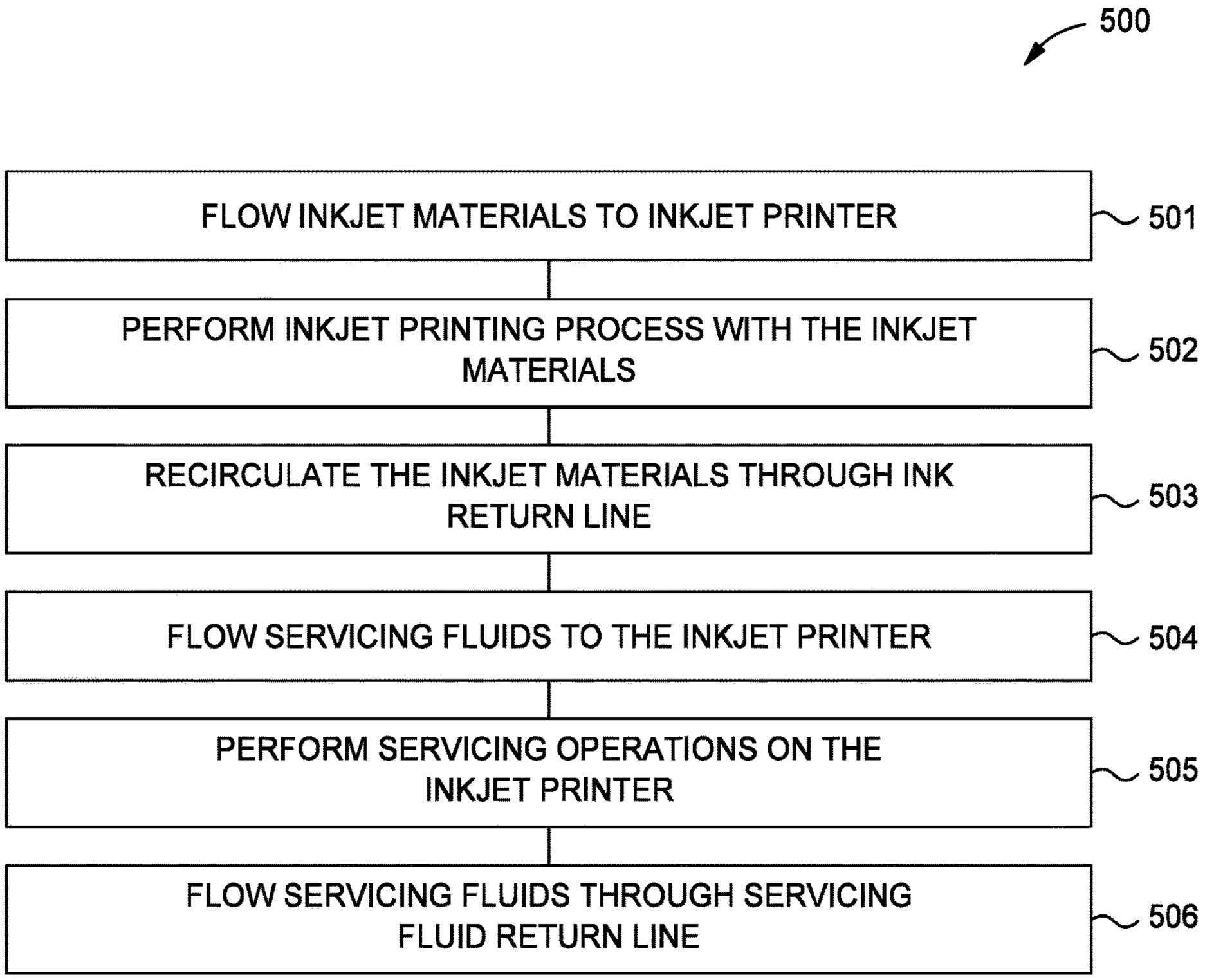
500
FLOW INKJET MATERIALS TO INKJET PRINTER
501
PERFORM INKJET PRINTING PROCESS WITH THE INKJET MATERIALS
502
RECIRCULATE THE INKJET MATERIALS THROUGH INK RETURN LINE
503
FLOW SERVICING FLUIDS TO THE INKJET PRINTER
504
PERFORM SERVICING OPERATIONS ON THE INKJET PRINTER
505
FLOW SERVICING FLUIDS THROUGH SERVICING FLUID RETURN LINE
506

FIG. 5

FLUID MANAGEMENT SYSTEM FOR INKJET MACHINES

CROSS-REFERENCE TO RELATED APPLICATIONS

This application claims the benefit of U.S. Patent Application No. 63/186,321, filed May 10, 2021, which is herein incorporated by reference.

BACKGROUND

Field

Embodiments of the present disclosure generally relate to inkjet chambers. More specifically, embodiments described herein provide for a fluid management system and a method of utilizing the fluid management system.

Description of the Related Art

Virtual reality is generally considered to be a computer-generated simulated environment in which a user has an apparent physical presence. A virtual reality experience can be generated in 3D and viewed with a head-mounted display (HMD), such as glasses or other wearable display devices that have near-eye display panels as lenses to display a virtual reality environment that replaces an actual environment.

Augmented reality, however, enables an experience in which a user can still see through the display lenses of the glasses or other HMD device, or handheld device, to view the surrounding environment, yet also see images of virtual objects that are generated in the display and appear as part of the environment. Augmented reality can include any type of input, such as audio and haptic inputs, as well as virtual images, graphics, and video that enhances or augments the environment that the user experiences. As an emerging technology, there are many challenges and design constraints with augmented reality.

One such challenge is fabricating optical films and optical devices. Inkjet printing also enables the formation of the optical films or optical devices. However, existing inkjet printers lack desired management of inkjet materials and servicing fluids to ensure reliable printing operations. Accordingly, what is needed in the art are inkjet service stations with improved fluid management.

SUMMARY

In one embodiment, a fluid management system is provided. The fluid management system includes a waste tank disposed in a lower region of an inkjet chamber, one or more servicing fluid supply tanks disposed in the lower region, and an inkjet printer disposed in a processing region of the inkjet chamber. The inkjet printer includes a processing apparatus and an inkjet service station. The fluid management system further includes a servicing fluid supply line fluidly coupled between the one or more servicing fluid supply tanks and the inkjet printer and a servicing fluid return line fluidly coupled between the inkjet printer and the waste tank.

In another embodiment, a fluid management system is provided. The fluid management system includes a waste tank disposed in an inkjet chamber, one or more servicing fluid supply tanks disposed in the inkjet chamber, one or more inkjet material supply tanks disposed in the inkjet chamber, and an inkjet printer disposed in a processing region of the inkjet chamber, the inkjet printer includes a processing apparatus and an inkjet service station. The fluid management system further includes a servicing fluid management module operable to facilitate flow of servicing fluids. The servicing fluid management module includes a servicing fluid supply line fluidly coupled between the one or more servicing fluid supply tanks and the inkjet printer, a servicing fluid return line fluidly coupled between the inkjet printer and the waste tank, and an ink fluid management module operable to facilitate flow of inkjet materials. The ink fluid management module includes an ink supply line fluidly coupled between the one or more inkjet material supply tanks and the inkjet chamber, and an ink return line coupled between the inkjet printer and the waste tank.

In yet another embodiment, a method is provided. The method includes flowing inkjet materials to an inkjet printer. The inkjet materials are flowed through an ink supply line from one or more inkjet material supply tanks to an inkjet printer. The method further includes performing an inkjet printing process in the inkjet printer. The inkjet printing process includes depositing the inkjet materials to a substrate disposed in the inkjet printer. The method further includes recirculating the inkjet materials from the inkjet printer via an ink return line to the one or more inkjet material supply tanks and flowing servicing fluids to the inkjet printer. The servicing fluids are flowed through a servicing fluid supply line from one or more servicing fluid supply tanks to the inkjet printer. The method further includes performing servicing operations on the inkjet printer. The servicing fluids are collected in a catch tray of the inkjet printer during and after the servicing operations. The method further includes flowing the servicing fluids from the inkjet printer to a waste tank via a servicing fluid return line.

BRIEF DESCRIPTION OF THE DRAWINGS

So that the manner in which the above recited features of the present disclosure can be understood in detail, a more particular description of the disclosure, briefly summarized above, may be had by reference to embodiments, some of which are illustrated in the appended drawings. It is to be noted, however, that the appended drawings illustrate only exemplary embodiments and are therefore not to be considered limiting of scope, as the disclosure may admit to other equally effective embodiments.

FIG. **1**A is a schematic, front-view of an inkjet chamber according to embodiments.

FIG. **1**B is a schematic, back-view of an inkjet chamber according to embodiments.

FIG. **2** is a schematic, side-view of an inkjet chamber according to embodiments.

FIG. **3** is a schematic diagram of a servicing fluid management system according to embodiments.

FIG. **4** is a schematic diagram of an ink management system according to embodiments.

FIG. **5** is a flow diagram of a method managing fluids with a fluid management system according to embodiments.

To facilitate understanding, identical reference numerals have been used, where possible, to designate identical elements that are common to the figures. It is contemplated that elements and features of one embodiment may be beneficially incorporated in other embodiments without further recitation.

DETAILED DESCRIPTION

Embodiments of the present disclosure generally relate to inkjet chambers. More specifically, embodiments described

herein provide for a fluid management system and a method of utilizing the fluid management system. The fluid management system is operable to manage servicing fluids and inkjet materials in parallel within the inkjet chamber.

In another embodiment, a fluid management system is provided. The fluid management system includes a waste tank disposed in an inkjet chamber, one or more servicing fluid supply tanks disposed in the inkjet chamber, one or more inkjet material supply tanks disposed in the inkjet chamber, and an inkjet printer disposed in a processing region of the inkjet chamber, the inkjet printer includes a processing apparatus and an inkjet service station. The fluid management system further includes a servicing fluid management module operable to facilitate flow of servicing fluids. The servicing fluid management module includes a servicing fluid supply line fluidly coupled between the one or more servicing fluid supply tanks and the inkjet printer, a servicing fluid return line fluidly coupled between the inkjet printer and the waste tank, and an ink fluid management module operable to facilitate flow of inkjet materials. The ink fluid management module includes an ink supply line fluidly coupled between the one or more inkjet material supply tanks and the inkjet chamber, and an ink return line coupled between the inkjet printer and the waste tank.

In yet another embodiment, a method is provided. The method includes flowing inkjet materials to an inkjet printer. The inkjet materials are flowed through an ink supply line from one or more inkjet material supply tanks to an inkjet printer. The method further includes performing an inkjet printing process in the inkjet printer. The inkjet printing process includes depositing the inkjet materials to a substrate disposed in the inkjet printer. The method further includes recirculating the inkjet materials from the inkjet printer via an ink return line to the one or more inkjet material supply tanks and flowing servicing fluids to the inkjet printer. The servicing fluids are flowed through a servicing fluid supply line from one or more servicing fluid supply tanks to the inkjet printer. The method further includes performing servicing operations on the inkjet printer. The servicing fluids are collected in a catch tray of the inkjet printer during and after the servicing operations. The method further includes flowing the servicing fluids from the inkjet printer to a waste tank via a servicing fluid return line.

FIG. **1**A is a schematic, front-view of an inkjet chamber **100**. The inkjet chamber **100** is operable to facilitate inkjet printing processes on a substrate **220** (shown in FIG. **2**). For example, an optical device substrate may be positioned in the inkjet chamber **100** such that an inkjet printing process may be performed on the optical device substrate. The inkjet printing process enables selective coating of the substrate with an inkjet material to avoid contamination in sensitive areas of the substrate. The thickness of the inkjet material on the substrate **220** (shown in FIG. **2**) may also be modulated with the inkjet printing process to form a thickness profile. Additionally, the inkjet printing process minimizes material usage when forming the optical films on the substrates.

The inkjet chamber **100** includes an enclosure **103**. The enclosure **103** encloses an inkjet printer **102**, one or more inkjet material supply tanks **104**, one or more waste tanks **106**, one or more servicing fluid supply tanks **108**, a fan filter unit **110**, and an exhaust port **112** within the inkjet chamber **100**. The inkjet printer **102** and the fan filter unit **110** are disposed in a processing region **114** of the inkjet chamber. The inkjet printing process is performed with the inkjet printer **102** within the processing region **114**. The exhaust port **112**, the inkjet material supply tanks **104**, the waste tank **106**, and the servicing fluid supply tanks **108** are disposed in a lower region **116** of the inkjet chamber **100**. The lower region **116** is disposed below the processing region **114**. The enclosure **103** includes a slit valve **118** therethrough such that a transfer robot (not shown) may position the substrate **220** (shown in FIG. **2**) in the processing region **114**.

In some embodiments, which can be combined with other embodiments described herein, the inkjet chamber **100** may include a heat source, such as lamps or infrared generating radiant heaters, adapted to heat the substrate **220** (shown in FIG. **2**) to a desired temperature. In another embodiment, which can be combined with other embodiments described herein, the inkjet chamber **100** can further be pressurized under a vacuum condition to ensure that any undesirable water or other contamination is removed from the surface of the substrate **220** (shown in FIG. **2**) prior to processing.

The inkjet material supply tanks **104**, the waste tank **106**, and the servicing fluid supply tanks **108** are disposed in the lower region **116**. The inkjet material supply tanks **104**, the waste tank **106**, and the servicing fluid supply tanks **108** may be removed, added, or positioned as needed within the lower region **116**. One or more of the inkjet material supply tanks **104** may be disposed in the lower region. Each inkjet material supply tank **104** is operable to retain an inkjet material. Each inkjet material supply tank **104** is fluidly coupled to the inkjet printer **102** to deliver the inkjet materials. The inkjet materials may be utilized in the inkjet printing processes in the inkjet printer **102**. The inkjet materials include, but are not limited to, acrylate, oil, water, or solvent based formulations, or combinations thereof.

One or more of the servicing fluid supply tanks **108** are disposed in the lower region **116**. Each servicing fluid supply tank **108** is operable to retain a servicing fluid. The servicing fluids include, but are not limited to, water, such as deionized water, isopropyl alcohol, propylene glycol methyl ether acetate (PGMEA), or combinations thereof. Each servicing fluid supply tank **108** is fluidly coupled to the inkjet printer **102** to deliver the servicing fluids. The servicing fluids may be utilized for servicing operations on the inkjet printer **102**. One or more waste tanks **106** may be disposed in the lower region **116**. The one or more waste tanks **106** are operable to receive inkjet materials or servicing fluids from the inkjet printer **102**.

The exhaust port **112** is disposed in the lower region **116**. The exhaust port **112** is fluidly coupled to the processing region **114**. The exhaust port **112** is operable to remove contaminants from the processing region **114** produced during processing. In one embodiment, which can be combined with other embodiments described herein, contaminants such as volatile organic compounds (VOCs) generated by the inkjet material or servicing materials are removed via the exhaust port **112**. The processing region **114** is maintained at a negative pressure to avoid the contaminants leaking outside of the inkjet chamber **100**.

The fan filter unit **110** is disposed in the processing region **114**. The fan filter unit **110** is coupled to a top surface **120** of the enclosure **103**. The fan filter unit **110** is operable to create a vertical flow of clean, dry air through the processing region **114**. The fan filter unit **110** maintains the processing region **114** at a positive pressure to minimize air and particle intake from outside the inkjet chamber **100**. The fan filter unit **110** and the exhaust port **112** provide independent pressure control in the processing region **114**. The fan filter unit **110** and the exhaust port **112** provide for control of the processing region **114**. The control of the processing region **114** ensures process quality and consistency when performing the inkjet printing process or servicing operations.

FIG. **1**B is a schematic, back-view of an inkjet chamber **100**. As described above, the inkjet chamber **100** includes an enclosure **103**. The enclosure **103** further includes a backside region **122**. The backside region **122** is disposed opposite of the lower region **116**. The backside region **122** includes a servicing fluid management module **124** and an ink management module **126**. The servicing fluid management module **124** is in fluid communication with the waste tank **106**, the servicing fluid supply tanks **108**, and the inkjet printer **102**. The ink management module **126** is in fluid communication with the inkjet material supply tanks **104**, the waste tank **106**, and the inkjet printer **102**.

Although, the servicing fluid management module **124** and the ink management module **126** are disposed in the backside region **122**, the servicing fluid management module **124** and the ink management module **126** may be disposed in the lower region **116**. Similarly, although the inkjet material supply tanks **104**, the waste tank **106**, and the servicing fluid supply tanks **108** are disposed in the lower region **116**, the inkjet material supply tanks **104**, the waste tank **106**, and the servicing fluid supply tanks **108** may be disposed in the backside region **122**. The number of waste tanks **106** are not limited, and there may be more than one waste tank **106** in the inkjet chamber **100**. For example, there may be one waste tank **106** operable to collect inkjet materials and one waste tank **106** operable to collect servicing fluids.

The servicing fluid management module **124** is operable to facilitate servicing operations. For example, the servicing fluid management module **124** is operable to facilitate the operation of the servicing operations such as at least one of printhead spitting, printhead purging, printhead flushing, printhead cleaning, printhead drying, or vacuum suction. The ink management module **126** is operable to facilitate the operation of the inkjet printing process. For example, the ink management module **126** is operable to facilitate inkjet material delivery and recirculation. The servicing fluid management module **124** may run in parallel with the ink management module **126**. In one embodiment, which can be combined with other embodiments described herein, a controller **128** is in communication with the servicing fluid management module **124** and the ink management module **126**. The controller **128** is generally designed to facilitate the control and automation of the inkjet printing process and the servicing operations.

FIG. **2** is a perspective view of an inkjet printer **102**. The inkjet printer **102** is disposed in a processing region **114** (shown in FIG. **1**A) of an inkjet chamber **100** (shown in FIGS. **1**A and **1**B). The inkjet printer **102** includes a stage **202**, a processing apparatus **204**, and an inkjet service station **222**. The stage **202** is supported by a pair of tracks **206** disposed on a slab **208**. The inkjet printer **102** is coupled to a controller **128**. The controller **128** is generally designed to facilitate the control and automation of the inkjet printing process described herein.

A substrate **220** is supported by the stage **202**. The inkjet printer **102** is operable to perform an inkjet printing process to print a film. For example, the inkjet printer **102** is operable to perform an inkjet printing process to form an optical film and/or an optical device. In one embodiment, which can be combined with other embodiments described herein, the substrate **220** is an optical device substrate. The substrate **220** is any suitable substrate on which an optical device or optical device film may be formed. The inkjet printing process performed in the inkjet printer **102** assists in the fabrication of at least one optical device or an optical film. It is to be understood that the at least one optical device described herein is an exemplary optical device and other optical devices may be used with or modified to accomplish aspects of the present disclosure. In one embodiment, which can be combined with other embodiments described herein, the optical device is a waveguide combiner. The waveguide combiner may be utilized for virtual, augmented, or mixed reality. In another embodiment, which can be combined with other embodiments described herein, the optical device is a micro-lens array. In another embodiment, which can be combined with other embodiments described herein, the optical device is utilized for prescription glasses. In yet another embodiment, which can be combined with other embodiments described herein, the optical device is a flat optical device, such as a metasurface.

The stage **202** moves along the pair of tracks **206** in at least one of an x direction, a y direction, or a z direction, as indicated by the coordinate system shown in FIG. **2**. In one embodiment, the pair of tracks **206** is a pair of parallel magnetic channels. As shown, each track **206** of the pair of tracks **206** is linear. In other embodiments, the pair of tracks **206** may have a non-linear shape.

The processing apparatus **204** is coupled to a support **212**. The processing apparatus **204** is disposed over the pair of tracks **206**. The pair of tracks **206** and the stage **202** are operable to pass under the processing apparatus **204**. The processing apparatus **204** is supported over the slab **208** by the support **212**. The processing apparatus **204** is operable to distribute one or more inkjet materials onto the substrate **220**. The substrate **220** is positioned on the stage **202** via a transfer robot (not shown).

The processing apparatus **204** is operable to distribute one or more inkjet materials onto the substrate **220**. The processing apparatus **204** includes one or more printheads **218**. One or more inkjet material supply tanks **104** disposed in the inkjet chamber **100** may be fluidly coupled to one of the plurality of printheads **218**. The one or more printheads **218** are operable to deposit inkjet materials from the one or more inkjet material supply tanks **104** to the substrate **220**. FIG. **2** only shows one printhead **218**, the processing apparatus **204** is not limited in the number of printheads **218** in the processing apparatus **204**. In one embodiment, which can be combined with other embodiments described herein, the one or more printheads **218** are operable to deposit one or more inkjet materials.

The inkjet service station **222** is disposed on the slab **208**. The inkjet service station **222** is operable to provide servicing operations to the inkjet printer **102**. The inkjet service station **222** includes a catch tray **224**, a first slide rail **230**, a second slide rail **226**, a service stage **228**, and a service stage extension **232**. The catch tray **224** is coupled to the service stage **228** via the service stage extension **232**. The second slide rail **226** is disposed along the service stage extension **232**. The catch tray **224** is disposed on the second slide rail **226**. The catch tray **224** is operable to move along the second slide rail **226**. The second slide rail **226** provides for the catch tray **224** to move in the y direction. The first slide rail **230** is disposed along the slab **208**. The service stage **228** is disposed on the first slide rail **230**. The service stage **228** is operable to move along the first slide rail **230**. The first slide rail **230** provides for the service stage **228** to move in the x direction. Therefore, the inkjet service station **222** is operable to move the catch tray **224** in one or both of the x direction and the y direction. In one embodiment, which can be combined with other embodiments described herein, the service stage **228** is operable to move the service stage extension **232** and the catch tray **224** in the z direction.

One or more servicing fluid supply tanks **108** disposed in the inkjet chamber **100** may be fluidly coupled to one of the inkjet service station **222**. The one or more servicing fluid supply tanks **108** are operable to supply service fluids utilized in the servicing operations. One or more waste tanks **106** disposed in the inkjet chamber **100** may be fluidly coupled to the processing apparatus **204** and/or the inkjet service station **222** to collect the excess inkjet materials and servicing fluids.

The catch tray **224** is operable to be positioned below the processing apparatus **204** during servicing operations. Specifically, the catch tray **224** is operable to be positioned below the one or more printheads **218** in the processing apparatus **204**. The catch tray **224** is operable to collect liquids deposited from the one or more printheads **218**. The catch tray **224** is in a work position when disposed under the processing apparatus **204**. The catch tray **224** is in the work position when the catch tray **224** is positioned such that the inkjet service station **222** is operable to perform the servicing operations under the processing apparatus **204**. The catch tray **224** is in a park position when not performing servicing operations. The catch tray **224** is in the park positon when away from the processing apparatus **204**. The catch tray **224** is in the park positon as shown in FIG. **2**.

FIG. **3** is a schematic diagram of a servicing fluid management system **300**. The servicing fluid management system **300** includes one or more waste tanks **106**, one or more servicing fluid supply tanks **108**, a servicing fluid management module **124**, and an inkjet printer **102**. The servicing fluid management system **300** is operable to facilitate the flow of servicing fluids between the waste tank **106**, the one or more servicing fluid supply tanks **108**, the servicing fluid management module **124**, and the inkjet printer **102**. In one embodiment, which can be combined with other embodiments described herein, the servicing fluid management system **300** may also facilitate vacuum operations of the servicing operations in the inkjet printer **102**. In another embodiment, which can be combined with other embodiments described herein, the servicing fluid management system **300** may also facilitate the flow of clean dry air (CDA) and inkjet materials between the waste tank **106**, one or more servicing fluid supply tanks **108**, a servicing fluid management module **124**, and the inkjet printer **102**. For example, the CDA is stored in the servicing fluid supply tanks **108**. The CDA can be flowed to the inkjet printer **102** to drive out fluids in the inkjet printer **102** to the waste tank **106**. The fluid management system **300** may remove residual inkjet materials in the ink supply line **406** and the ink return line **408** of the ink management system **400** (shown in FIG. **4**).

The servicing fluid management module **124** includes a supply pump **302**, a return pump **304**, a liquid trap tank **306**, a vacuum source **308**, a servicing fluid supply line **310**, a servicing fluid return line **312**, and a vacuum line **314**. In some embodiments, which may be combined with other embodiments described herein, the servicing fluid management module **124** includes one or more of manual valves, pneumatic valves, regulators, filters, flow restrictors, pressure gauges, check valves, solenoid valves, flow sensors, and level sensors disposed along one or more of the servicing fluid supply line **310**, the servicing fluid return line **312**, and the vacuum line **314** to facilitate or alter the movement of the servicing fluids.

The servicing fluid supply line **310** is coupled between the one or more servicing fluid supply tanks **108** and the inkjet printer **102**. The supply pump **302** is disposed along the servicing fluid supply line **310**. The supply pump **302** is operable to pump the servicing fluids in the one or more servicing fluid supply tanks **108** to the inkjet printer **102** such that servicing operations may be performed. The servicing fluid return line **312** is coupled between the inkjet printer **102** and the waste tank **106**. The return pump **304** is disposed along the servicing fluid return line **312**. The return pump **304** is operable to pump the servicing fluids from the inkjet printer **102** to the waste tank **106**. In one embodiment, which can be combined with other embodiments described herein, the return pump **304** is operable to drain inkjet materials from the inkjet printer **102**. The waste tank **106** may either be replaced or emptied to remove the servicing fluids.

In one embodiment, which can be combined with other embodiments described herein, the servicing fluids in the servicing fluid supply line **310** may be in fluid communication with one or more flush valves **316**. The one or more flush valves **316** may be opened to remove the servicing fluids from the servicing fluid supply line **310**. In another embodiment, which can be combined with other embodiments described herein, inkjet materials within the servicing fluid return line **312** may be in fluid communication with one or more ink drain ports **322**. The one or more ink drain ports **322** may be opened to remove the inkjet materials or servicing fluids from the servicing fluid return line **312**. The one or more ink drain ports **322** may be disposed in the ink management module **126**.

The inkjet printer **102** includes a processing apparatus **204** and an inkjet service station **222**. The servicing fluids from the servicing fluid supply tanks **108** are provided to one or both of the inkjet service station **222** and the processing apparatus **204**. The servicing fluids are provided to the inkjet service station **222** and the processing apparatus **204** such that servicing operations may be performed. For example, the servicing fluids may be flowed to the processing apparatus **204** to perform a flushing operation with the servicing fluids. The servicing fluids and excess inkjet materials are collected in a catch tray **224** (shown in FIG. **2**) of the inkjet service station and returned to the waste tank **106**. In one embodiment, which can be combined with other embodiments described herein, the servicing fluids may be recirculated from the waste tank **106** back to the one or more servicing fluid supply tanks **108** via a servicing fluid recirculation line **324**. The servicing fluid recirculation line **324** is coupled between the waste tank **106** and the one or more servicing fluid supply tanks **108**.

The vacuum line **314** is coupled between the inkjet printer **102** and the vacuum source **308**. The liquid trap tank **306** is disposed along the vacuum line **314**. The vacuum source **308** is operable to provide a vacuum force through the vacuum line **314**. For example, the vacuum line **314** may provide a vacuum force to the inkjet service station **222** to utilize in servicing operations. The liquid trap tank **306** is operable to trap servicing fluid and/or inkjet materials in the vacuum line **314**. The liquid trap tank **306** prevents servicing fluids and inkjet materials from entering the vacuum line **314**. The servicing fluid return line **312** is fluidly coupled to the liquid trap tank **306** such that the collected servicing fluids may flow to the waste tank **106**.

In one embodiment, which can be combined with other embodiments described herein, a hand-held suction head **318** is disposed along the vacuum line **314**. The vacuum line **314** is operable to provide a vacuum force to the hand-held suction head **318**. The hand-held suction head **318** is operable to be utilized in servicing operations conducted manually with the hand-held suction head **318**.

In one embodiment, which can be combined with other embodiments described herein, the servicing fluid management module **124** further includes one or more of the manual valves, the pneumatic valves, the regulators, the filters, the flow restrictors, the pressure gauges, the check valves, the solenoid valves, the flow sensors, and the level sensors disposed along one or more of the servicing fluid supply line **310**, the servicing fluid return line **312**, and the vacuum line **314** to facilitate and support the flow of the servicing fluids. The manual valves, the pneumatic valves, the regulators, the filters, the flow restrictors, the pressure gauges, the check valves, the solenoid valves, the flow sensors, and the level sensors may be in communication with a controller **128** to facilitate the operations along the servicing fluid supply line **310**, the servicing fluid return line **312**, and the vacuum line **314**. The number of the manual valves, the pneumatic valves, the regulators, the filters, the flow restrictors, the pressure gauges, the check valves, the solenoid valves, the flow sensors, and the level sensors is not limited. The manual valves, the pneumatic valves, the regulators, the filters, the flow restrictors, the pressure gauges, the check valves, the solenoid valves, the flow sensors, and the level sensors may be positioned as needed along the servicing fluid supply line **310**, the servicing fluid return line **312**, and the vacuum line **314**.

FIG. **4** is a schematic diagram of an ink management system **400**. The ink management system **400** includes a waste tank **106**, inkjet material supply tanks **104**, an ink management module **126**, and an inkjet printer **102**. The ink management system **400** is operable to facilitate the transfer of inkjet materials between the waste tank **106**, the inkjet material supply tanks **104**, the ink management module **126**, and the inkjet printer **102**. The servicing fluid management system **300** and the ink management system **400** run in parallel within the inkjet chamber **100**. In combination, the ink management system **400** and the servicing fluid management system **300** form a fluid management system.

The ink management module **126** includes an ink supply pump **402**, an ink return pump **404**, an ink supply line **406**, an ink return line **408**, an ink heater **420**, a check valve **412**, and one or more degassing ports **418**. In some embodiments, which may be combined with other embodiments described herein, the ink management module **126** includes one or more of manual valves, pneumatic valves, regulators, filters e.g., the filter **414**, flow restrictors, pressure gauges, check valves e.g., the check valve **412**, solenoid valves, flow sensors, and level sensors disposed along one or more of the ink supply line **406** or the ink return line **408** to facilitate or alter the movement of the inkjet materials.

As shown in FIG. **4**, the ink heater **420** is disposed along the ink supply line **406**. The ink heater **420** is configured to heat the inkjet materials prior to entering the processing apparatus **204**. The check valve **412** is also disposed along the ink supply line **406**. The check valve **412** prevents the inkjet material from flowing back to the one or more inkjet material supply tanks **104**. The filter **414** is disposed along the ink supply line **406**. The filter **414** removes contaminants from the inkjet materials flowing through the ink supply line **406**. The ink supply line **406** may include more than one filter **414**.

In some embodiments, which can be combined with other embodiments described herein, one or more ink drain ports **322**, as shown in FIG. **3**, may be disposed in the ink management module **126**. Some inkjet materials within the ink return line **408** may be in fluid communication with one or more ink drain ports **322**. The one or more ink drain ports **322** may be opened to remove the ink from the ink return line **408**.

In some embodiments, which can be combined with other embodiments described herein, one or more degassing ports **418**, as shown in FIG. **3**, may be disposed in the ink management module **126**. The degassing ports **418** may be disposed along the ink supply line **406**. The inkjet materials within the ink supply line **406** may flow through the one or more degassing ports **418**. The one or more degassing ports **418** are operable to remove gas bubbles from the inkjet materials flowing through the ink supply line **406**.

The ink supply line **406** is coupled between the one or more inkjet material supply tanks **104** and the inkjet printer **102**. The ink supply pump **402** is disposed along the ink supply line **406**. The ink supply pump **402** is operable to pump the inkjet materials in the one or more inkjet material supply tanks **104** to the inkjet printer **102** such that inkjet printing processes may be performed. The ink return line **408** is coupled between the inkjet printer **102** and the waste tank **106**. The ink return pump **404** is disposed along the ink return line **408**. The ink return pump **404** is operable to pump the inkjet materials from the inkjet printer **102** to the waste tank **106**. The waste tank **106** may either be replaced or emptied to remove the inkjet materials.

In some embodiments, which can be combined with other embodiments described herein, the ink supply pump **402** and the ink return pump **404** can be replaced with the supply pump **302** and the return pump **304**, shown in FIG. **3**. In other embodiments, the supply pump **302** and the return pump **304** can be replaced with the ink supply pump **402** and the ink return pump **404**. Therefore, the ink management system **400** and the servicing fluid management system **300** can share the return pumps and supply pumps. The operation of the ink management system **400** and the servicing fluid management system **300** increases in efficiency by sharing the supply pump **302** and the return pump **304** or the ink supply pump **402** and the ink return pump **404**. Further, the ink management system **400** and the servicing fluid management system **300** can share a compressed air source. Additionally, the ink drain ports **322** of the ink management system **400** and the servicing fluid management system **300** are shared. In other embodiments, the waste tank **106** is shared between the ink management system **400** and the servicing fluid management system **300**. By sharing components between the ink management system **400** and the servicing fluid management system **300**, the inkjet chamber **100** is more compact, reducing the area required for the inkjet chamber **100**.

The inkjet printer **102** includes a processing apparatus **204**. The inkjet materials from the inkjet material supply tanks **104** are provided to the processing apparatus **204**. The inkjet materials are provided to the processing apparatus **204** such that inkjet printing processes may be performed. In one embodiment, which can be combined with other embodiments described herein, excess inkjet materials not utilized during the inkjet printing process are returned to the waste tank **106**. In another embodiment, which can be combined with other embodiments described herein, the inkjet material may be recirculated from the waste tank **106** back to the one or more inkjet material supply tanks **104** via an ink recirculation line **410**. The ink recirculation line **410** is coupled between the waste tank **106** and the one or more inkjet material supply tanks **104**. In yet another embodiment, which can be combined with other embodiments described

herein, the ink return line **408** my provide the inkjet materials directly to the ink recirculation line **410** and bypass the waste tank **106**.

In one embodiment, which can be combined with other embodiments described herein, the ink management module **126** further includes one or more of the manual valves, the pneumatic valves, the regulators, the filters, the flow restrictors, the pressure gauges, the check valves, the solenoid valves, the flow sensors, and the level sensors disposed along one or more of the ink supply line **406** and the ink return line **408** to facilitate and support the movement of the servicing fluids. The manual valves, the pneumatic valves, the regulators, the filters, the flow restrictors, the pressure gauges, the check valves, the solenoid valves, the flow sensors, and the level sensors may be in communication with a controller **128** to facilitate the operations along the ink supply line **406** and the ink return line **408**. The number of the manual valves, the pneumatic valves, the regulators, the filters, the flow restrictors, the pressure gauges, the check valves, the solenoid valves, the flow sensors, and the level sensors is not limited. The manual valves, the pneumatic valves, the regulators, the filters, the flow restrictors, the pressure gauges, the check valves, the solenoid valves, the flow sensors, and the level sensors may be positioned as needed along the ink supply line **406** and the ink return line **408**.

FIG. **5** is a flow diagram of a method managing fluids with a fluid management system. To facilitate explanation, the method **500** will be described with reference to FIG. **3** and FIG. **4**. The method **500** is operable to manage inkjet materials and servicing fluids in an inkjet chamber **100** (shown in FIG. **1**) such that inkjet printing processes and servicing operations may be performed. The method **500** includes a servicing fluid management system **300** and an ink management system **400**.

The servicing fluid management system **300** and the ink management system **400** run in parallel within the inkjet chamber **100**. The servicing fluid management system **300** and the ink management system **400** run in parallel to improve the overall quality of the optical film and/or the optical device to be formed. Integrating the servicing fluid management system **300** and the ink management system **400** allows for the inkjet materials to be provided to the substrate **220** while the servicing operations can be efficiently conducted before, concurrently, or after the inkjet printing process. As the servicing fluid management system **300** is fully integrated with the inkjet chamber **100**, the servicing operations are completed without having to modify the inkjet chamber **100**. The servicing operations are completed efficiently and with precision. The precision of the servicing operations due to the integrated servicing fluid management system **300** improves overall quality of the optical films and optical devices. As the servicing operations can be run more frequently, the performance of the inkjet printing process is improved as serving operations maintain the precision and condition of the inkjet chamber **100**. Further, as the servicing fluid management system **300** and the ink management system **400** run in parallel with various shared components, the size and cost of the inkjet chamber **100** is decreased. Therefore, inkjet materials and servicing fluids are independently managed such that print quality, consistency, and machine run times are improved. In combination, the ink management system **400** and the servicing fluid management system **300** form a fluid management system.

At operation **501**, inkjet materials are flowed to an inkjet printer **102**. The inkjet materials are stored in one or more inkjet material supply tanks **104**. The one or more inkjet material supply tanks **104** are in fluid communication with an ink supply line **406**. An ink supply pump **402** flows the inkjet materials along the ink supply line **406** to a processing apparatus **204** of the inkjet printer **102**.

At operation **502**, an inkjet printing process is performed with the inkjet materials. The inkjet materials are operable to be deposited during an inkjet printing process to a substrate **220** (shown in FIG. **2**).

At operation **503**, the inkjet materials are recirculated through an ink return line **408**. An ink return pump **404** flows the inkjet materials along the ink return line **408**. Excess inkjet materials not utilized during the inkjet printing process may be returned to the waste tank **106**, recirculated from the waste tank **106** back to the one or more inkjet material supply tanks **104** via an ink recirculation line **410**, or provided directly to the ink recirculation line **410** and bypass the waste tank **106** to return to the one or more inkjet material supply tanks **104**. Circulation of the inkjet materials prevents clogging within the inkjet printer **102**.

At operation **504**, servicing fluids are flowed to the inkjet printer **102**. The servicing fluids are stored in one or more servicing fluid supply tanks **108**. The one or more servicing fluid supply tanks **108** are in fluid communication with a servicing fluid supply line **310**. A supply pump **302** flows the servicing fluids along the servicing fluid supply line **310** to the processing apparatus **204** and an inkjet service station **222** of the inkjet printer **102**. In one embodiment, which can be combined with other embodiments described herein, a vacuum line **314** is in fluid communication with the inkjet service station **222** to provide a vacuum force from a vacuum source **308** coupled to the vacuum line **314**.

At operation **505**, servicing operations are performed on the inkjet printer **102**. For example, servicing operations such as at least one of printhead spitting, printhead purging, printhead flushing, printhead cleaning, printhead drying, or vacuum suction are performed on the processing apparatus **204** with the servicing fluids. The used servicing fluids are collected in a catch tray **224** (shown in FIG. **2**) during and after the servicing operations.

At operation **506**, the servicing fluids are flowed through a servicing fluid return line **312**. A return pump **304** flows the servicing fluids along the servicing fluid return line **312**. The servicing fluids are returned to the waste tank **106**. In one embodiment, which can be combined with other embodiments described herein, the servicing fluids may be recirculated from the waste tank **106** back to the one or more servicing fluid supply tanks **108** via a servicing fluid recirculation line **324**. In another embodiment, which can be combined with other embodiments described herein, the servicing fluids that are in the vacuum line **314** are trapped by a liquid trap tank **306** and flowed to the waste tank **106**. The waste tank **106** may either be replaced or emptied to remove the servicing fluids and inkjet materials in the waste tank **106**. Management of the servicing fluids ensures clean and uncontaminated servicing fluids that may be utilized to service the processing apparatus **204**. In one embodiment, which can be combined with other embodiments described herein, the inkjet material is recirculating through inkjet printer **102** concurrently while the servicing fluid is collected in the waste tank **106**.

In summation, a fluid management system and a method of utilizing the fluid management system are described herein. The fluid management system includes a servicing fluid management system and an ink management system. The servicing fluid management system and the ink management system run in parallel within an inkjet chamber.

Therefore, inkjet materials and servicing fluids are independently managed such that print quality, consistency, and machine run times are improved for inkjet printing processes. The ink management system supports the flow of inkjet materials between a waste tank, one or more inkjet material supply tanks, an ink management module, and the inkjet printer. The servicing fluid management system supports the flow of servicing fluids between the waste tank, one or more servicing fluid supply tanks, a servicing fluid management module, and the inkjet printer.

While the foregoing is directed to embodiments of the present disclosure, other and further embodiments of the disclosure may be devised without departing from the basic scope thereof, and the scope thereof is determined by the claims that follow.

What is claimed is:

1. A fluid management system, comprising:

a waste tank disposed in a lower region of an inkjet chamber;

a servicing fluid supply tank disposed in the lower region;

a inkjet material supply tank disposed in the lower region;

an inkjet printer disposed in a processing region of the inkjet chamber, the inkjet printer comprising:

a processing apparatus; and

an inkjet service station;

a servicing fluid supply line fluidly coupled between the servicing fluid supply tank and the inkjet service station of the inkjet printer;

a servicing fluid return line fluidly coupled between the inkjet service station of the inkjet printer and the waste tank;

a servicing fluid recirculation line fluidly coupled to the waste tank and the servicing fluid supply tank;

an ink supply line fluidly coupled between the inkjet material supply tank and the processing apparatus of the inkjet printer;

an ink return line fluidly coupled between the processing apparatus of the inkjet printer and the waste tank; and

an ink recirculation line fluidly coupled to the waste tank and the inkjet material supply tank.

2. The fluid management system of claim **1**, further comprising a vacuum line coupled between the inkjet printer and a vacuum source.

3. The fluid management system of claim **2**, further comprising a liquid trap tank disposed on the vacuum line, the servicing fluid return line fluidly coupled to the liquid trap tank.

4. The fluid management system of claim **1**, further comprising:

a supply pump disposed on the servicing fluid supply line; and

a return pump disposed on the servicing fluid return line.

5. The fluid management system of claim **4**, wherein:

the supply pump is operable to flow a servicing fluid from the one or more servicing fluid supply tanks to the inkjet printer; and

the return pump is operable to flow the servicing fluid from the inkjet printer to the waste tank.

6. The fluid management system of claim **1**, further comprising one or more flush valves in fluid communication with the servicing fluid supply line.

7. The fluid management system of claim **1**, wherein one or more of manual valves, pneumatic valves, regulators, filters, flow restrictors, pressure gauges, check valves, solenoid valves, flow sensors, and level sensors are disposed along the servicing fluid supply line and the servicing fluid return line.

8. A fluid management system, comprising:

a waste tank disposed in an inkjet chamber;

one or more servicing fluid supply tanks disposed in the inkjet chamber;

one or more inkjet material supply tanks disposed in the inkjet chamber;

an inkjet printer disposed in a processing region of the inkjet chamber, the inkjet printer comprising:

a processing apparatus; and

an inkjet service station;

a servicing fluid management module operable to facilitate flow of servicing fluids, comprising:

a servicing fluid recirculation line fluidly coupled to the waste tank and the one or more servicing fluid supply tanks;

a servicing fluid supply line fluidly coupled between the one or more servicing fluid supply tanks and the inkjet printer; and

a servicing fluid return line fluidly coupled between the inkjet printer and the waste tank; and

an ink fluid management module operable to facilitate flow of inkjet materials, comprising:

an ink recirculation line fluidly coupled to the waste tank and the one or more inkjet material supply tanks;

an ink supply line fluidly coupled between the one or more inkjet material supply tanks and the inkjet chamber; and

an ink return line coupled between the inkjet printer and the waste tank.

9. The fluid management system of claim **8**, further comprising a vacuum line coupled between the inkjet printer and a vacuum source.

10. The fluid management system of claim **9**, further comprising a liquid trap tank disposed on the vacuum line, the servicing fluid return line fluidly coupled to the liquid trap tank.

11. The fluid management system of claim **8**, further comprising:

a supply pump disposed on the servicing fluid supply line; and

a return pump disposed on the servicing fluid return line.

12. The fluid management system of claim **11**, wherein:

the supply pump is operable to flow a servicing fluid from the one or more servicing fluid supply tanks to the inkjet printer; and

the return pump is operable to flow the servicing fluid from the inkjet printer to the waste tank.

13. The fluid management system of claim **8**, further comprising one or more flush valves in fluid communication with the servicing fluid supply line.

14. The fluid management system of claim **8**, wherein one or more of manual valves, pneumatic valves, regulators, filters, flow restrictors, pressure gauges, check valves, solenoid valves, flow sensors, and level sensors are disposed along the servicing fluid supply line and the servicing fluid return line.

15. A method, comprising:

flowing inkjet materials to an inkjet printer, the inkjet materials flowed through an ink supply line from one or more inkjet material supply tanks to an inkjet printer;

performing an inkjet printing process in the inkjet printer, the inkjet printing process including depositing the inkjet materials to a substrate disposed in the inkjet printer;

recirculating the inkjet materials from the inkjet printer via an ink return line to a waste tank and to the one or

more inkjet material supply tanks from an ink recirculation line fluidly coupled to the waste tank;

flowing servicing fluids to the inkjet printer, the servicing fluids flowed through a servicing fluid supply line from one or more servicing fluid supply tanks to the inkjet printer;

performing servicing operations on the inkjet printer, wherein the servicing fluids are collected in a catch tray of the inkjet printer during and after the servicing operations;

flowing the servicing fluids from the inkjet printer to the waste tank via a servicing fluid return line; and

recirculating the servicing fluids in the waste tank to the one or more servicing fluid supply tanks via a servicing fluid recirculation line, the servicing fluid recirculation line is coupled between the waste tank and the one or more servicing fluid supply tanks.

16. The method of claim **15**, where the servicing operations include at least one of printhead spitting, printhead purging, printhead flushing, printhead cleaning, printhead drying, or vacuum suctioning.

17. The method of claim **15**, wherein the performing servicing operations on the inkjet printer further includes providing a vacuum force via a vacuum source such that the servicing fluids collected via the vacuum force are collected in a fluid trap tank in fluid communication with the servicing fluid return line.

18. The method of claim **15**, wherein the inkjet material is recirculating through the inkjet printer concurrently while the servicing fluids are collected in the waste tank.

* * * * *