US011899366B2

(12) **United States Patent**
**Babayan et al.**

(10) **Patent No.: US 11,899,366 B2**
(45) **Date of Patent: Feb. 13, 2024**

(54) **METHOD AND APPARATUS FOR POST EXPOSURE PROCESSING OF PHOTORESIST WAFERS**

(71) Applicant: **Applied Materials, Inc.**, Santa Clara, CA (US)

(72) Inventors: **Viachslav Babayan**, Sunnyvale, CA (US); **Douglas A. Buchberger, Jr.**, Livermore, CA (US); **Qiwei Liang**, Fremont, CA (US); **Ludovic Godet**, Sunnyvale, CA (US); **Srinivas D. Nemani**, Sunnyvale, CA (US); **Daniel J. Woodruff**, Kalispell, MT (US); **Randy Harris**, Kalispell, MT (US); **Robert B. Moore**, Bigfork, MT (US)

(73) Assignee: **Applied Materials, Inc.**, Santa Clara, CA (US)

( * ) Notice: Subject to any disclaimer, the term of this patent is extended or adjusted under 35 U.S.C. 154(b) by 282 days.

(21) Appl. No.: **17/468,536**

(22) Filed: **Sep. 7, 2021**

(65) **Prior Publication Data**

US 2022/0004104 A1 Jan. 6, 2022

**Related U.S. Application Data**

(62) Division of application No. 16/272,962, filed on Feb. 11, 2019, now Pat. No. 11,112,697, which is a (Continued)

(51) **Int. Cl.**
***G03F 7/16*** (2006.01)
***G03F 7/26*** (2006.01)
(Continued)

(52) **U.S. Cl.**
CPC ..... ***G03F 7/2035*** (2013.01); ***G03F 7/168*** (2013.01); ***G03F 7/26*** (2013.01); ***G03F 7/38*** (2013.01);
(Continued)

(58) **Field of Classification Search**
CPC ..... G03F 7/2035; G03F 7/168; G03F 7/26; G03F 7/38; G03F 7/40; G03F 7/20;
(Continued)

(56) **References Cited**

U.S. PATENT DOCUMENTS

4,007,987 A 2/1977 Sheets
4,743,570 A 5/1988 Lamont, Jr.
(Continued)

FOREIGN PATENT DOCUMENTS

CN 1369039 A 9/2002
CN 1402308 A 3/2003
(Continued)

OTHER PUBLICATIONS

Office Action for Taiwan Application No. 109145433 (APPM/023506TW01DIV) dated Nov. 15, 2021.
(Continued)

*Primary Examiner* — Jeffrie R Lund
(74) *Attorney, Agent, or Firm* — Patterson + Sheridan, LLP

(57) **ABSTRACT**

Embodiments described herein relate to methods and apparatus for performing immersion field guided post exposure bake processes. Embodiments of apparatus described herein include a chamber body defining a processing volume. A pedestal may be disposed within the processing volume and a first electrode may be coupled to the pedestal. A moveable stem may extend through the chamber body opposite the pedestal and a second electrode may be coupled to the moveable stem. In certain embodiments, a fluid containment ring may be coupled to the pedestal and a dielectric containment ring may be coupled to the second electrode.

**10 Claims, 9 Drawing Sheets**

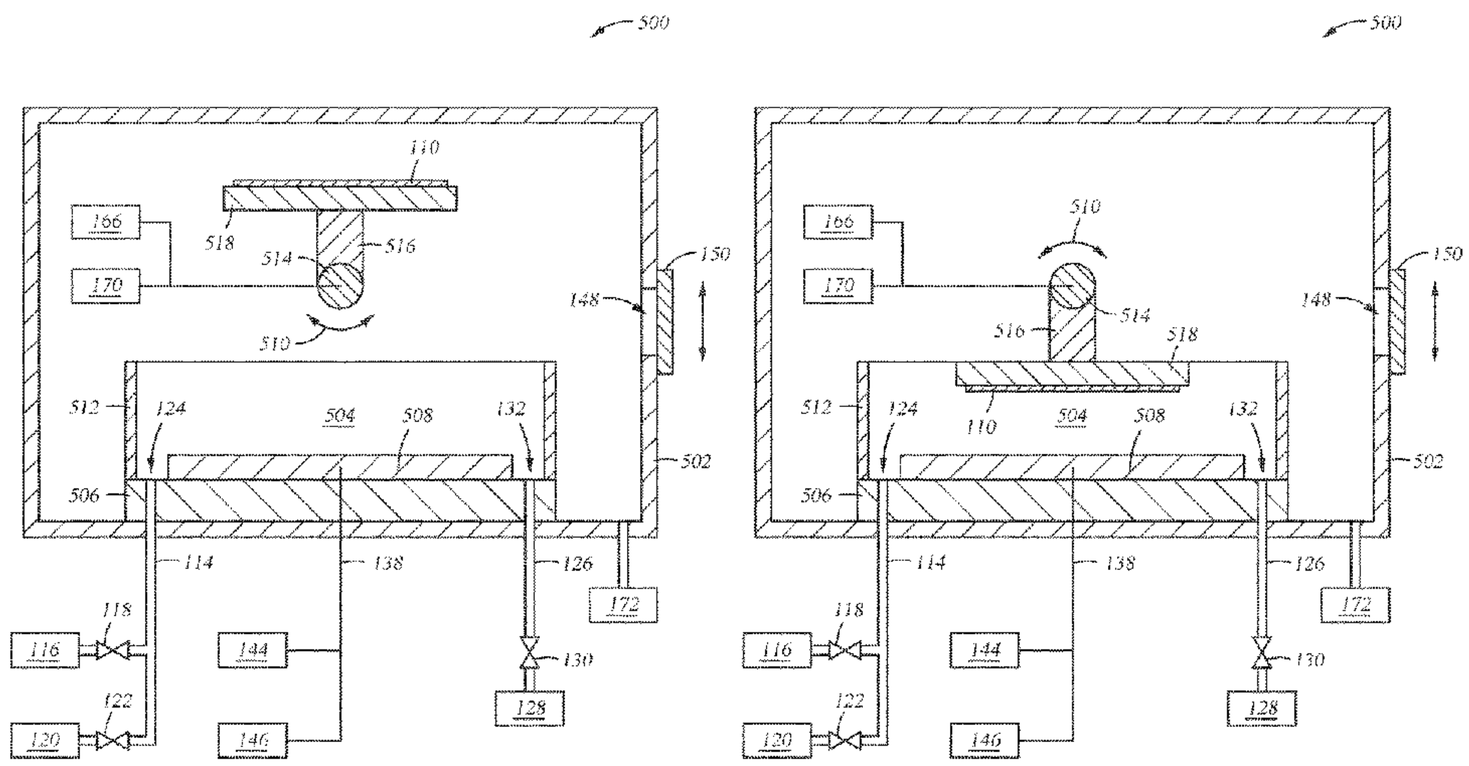

**Related U.S. Application Data**

division of application No. 14/989,488, filed on Jan. 6, 2016, now Pat. No. 10,203,604.

(60) Provisional application No. 62/267,531, filed on Dec. 15, 2015, provisional application No. 62/261,171, filed on Nov. 30, 2015.

(51) **Int. Cl.**

| | |
|---|---|
| ***G03F 7/38*** | (2006.01) |
| ***H01L 21/67*** | (2006.01) |
| ***G03F 7/40*** | (2006.01) |
| ***H01L 21/687*** | (2006.01) |
| ***G03F 7/20*** | (2006.01) |

(52) **U.S. Cl.**

CPC ..... ***G03F 7/40*** (2013.01); ***H01L 21/67017*** (2013.01); ***H01L 21/67103*** (2013.01); ***H01L 21/68764*** (2013.01)

(58) **Field of Classification Search**

CPC ..... G03F 7/70991; H01L 21/67017; H01L 21/67103; H01L 21/68764; H01L 21/02255; H01L 21/0274

See application file for complete search history.

(56) **References Cited**

U.S. PATENT DOCUMENTS

| | | | | |
|---|---|---|---|---|
| 5,036,794 | A | 8/1991 | Yamazaki et al. | |
| 5,158,861 | A | 10/1992 | Tokui et al. | |
| 5,685,949 | A | 11/1997 | Yashima | |
| 6,079,358 | A | 6/2000 | Kim et al. | |
| 6,097,402 | A | 8/2000 | Case et al. | |
| 6,163,033 | A * | 12/2000 | Smick | H01J 37/3171 250/442.11 |
| 6,187,152 | B1 | 2/2001 | Ting et al. | |
| 6,242,164 | B1 | 6/2001 | Choi et al. | |
| 6,261,744 | B1 | 7/2001 | Yoshioka | |
| 6,288,174 | B1 | 9/2001 | Ikegami et al. | |
| 6,686,132 | B2 * | 2/2004 | Cheng | G03F 7/38 430/313 |
| 6,841,342 | B2 | 1/2005 | Nishi et al. | |
| 6,875,466 | B2 | 4/2005 | Matsui et al. | |
| 7,187,796 | B1 | 3/2007 | Phan et al. | |
| 7,374,867 | B2 | 5/2008 | Bristol et al. | |
| 7,537,672 | B1 | 5/2009 | Koshiishi et al. | |
| 7,541,137 | B2 | 6/2009 | Beach | |
| 7,780,366 | B2 | 8/2010 | Ogata et al. | |
| 7,864,502 | B2 | 1/2011 | Boyd et al. | |
| 8,097,402 | B2 | 1/2012 | Scheer et al. | |
| 8,288,174 | B1 | 10/2012 | Rathsack et al. | |
| 9,377,692 | B2 | 6/2016 | Xie et al. | |
| 9,733,579 | B2 * | 8/2017 | Nam | G03F 7/70325 |
| 9,823,570 | B2 * | 11/2017 | Godet | G03F 7/38 |
| 9,958,782 | B2 * | 5/2018 | Hanson | H01L 21/67011 |
| 9,964,863 | B1 | 5/2018 | Babayan et al. | |
| 10,203,604 | B2 * | 2/2019 | Babayan | H01L 21/67103 |
| 10,474,033 | B2 * | 11/2019 | Babayan | G03F 7/26 |
| 10,615,058 | B2 * | 4/2020 | Godet | G03F 7/0045 |
| 11,112,697 | B2 * | 9/2021 | Babayan | H01L 21/67017 |
| 2002/0123011 | A1 | 9/2002 | Kawano et al. | |
| 2003/0008246 | A1 | 1/2003 | Cheng et al. | |
| 2003/0032302 | A1 | 2/2003 | Nishi et al. | |
| 2004/0016637 | A1 | 1/2004 | Yang et al. | |
| 2004/0050491 | A1 | 3/2004 | Miya et al. | |
| 2004/0052963 | A1 | 3/2004 | Ivanov et al. | |
| 2004/0113287 | A1 | 6/2004 | Kishimoto et al. | |
| 2004/0206373 | A1 | 10/2004 | Donoso et al. | |
| 2005/0074706 | A1 | 4/2005 | Bristol et al. | |
| 2005/0120956 | A1 | 6/2005 | Suzuki | |
| 2005/0211386 | A1 | 9/2005 | Hamelin et al. | |
| 2006/0078677 | A1 | 4/2006 | Won et al. | |
| 2007/0000613 | A1 | 1/2007 | Pau et al. | |
| 2008/0008967 | A1 | 1/2008 | Chang et al. | |
| 2008/0050679 | A1 | 2/2008 | Salek et al. | |
| 2008/0135207 | A1 | 6/2008 | Fukuoka et al. | |
| 2008/0142051 | A1 | 6/2008 | Hashizume | |
| 2008/0156641 | A1 | 7/2008 | Pietzner et al. | |
| 2008/0304940 | A1 | 12/2008 | Auer-Jongepier et al. | |
| 2009/0002722 | A1 | 1/2009 | Hayasaki et al. | |
| 2010/0029093 | A1 | 2/2010 | Shiozawa et al. | |
| 2010/0108103 | A1 | 5/2010 | Minami et al. | |
| 2010/0216077 | A1 | 8/2010 | Nishi et al. | |
| 2010/0248152 | A1 | 9/2010 | Scheer et al. | |
| 2010/0255196 | A1 | 10/2010 | Geisler et al. | |
| 2011/0061812 | A1 | 3/2011 | Ganguly et al. | |
| 2011/0155322 | A1 | 6/2011 | Himori et al. | |
| 2011/0165515 | A1 | 7/2011 | Wang et al. | |
| 2011/0269314 | A1 | 11/2011 | Lee et al. | |
| 2012/0103939 | A1 | 5/2012 | Wu et al. | |
| 2012/0260946 | A1 | 10/2012 | Ogata et al. | |
| 2012/0322011 | A1 | 12/2012 | Wu et al. | |
| 2013/0008872 | A1 | 1/2013 | Higashuima et al. | |
| 2013/0269737 | A1 | 10/2013 | Mizuno | |
| 2013/0333616 | A1 | 12/2013 | Klindworth et al. | |
| 2013/0337605 | A1 | 12/2013 | Kang et al. | |
| 2014/0034094 | A1 | 2/2014 | Nuch et al. | |
| 2014/0261159 | A1 | 9/2014 | Okabe et al. | |
| 2015/0020852 | A1 | 1/2015 | Kato et al. | |
| 2015/0176128 | A1 | 6/2015 | Song et al. | |
| 2015/0355549 | A1 | 12/2015 | Xie et al. | |
| 2016/0011515 | A1 | 1/2016 | Xie et al. | |
| 2016/0011518 | A1 | 1/2016 | Xie et al. | |
| 2016/0011526 | A1 | 1/2016 | Xie et al. | |
| 2016/0109813 | A1 | 4/2016 | Nam et al. | |
| 2016/0139503 | A1 | 5/2016 | Ramaswamy et al. | |
| 2016/0196997 | A1 | 7/2016 | White et al. | |
| 2016/0240413 | A1 | 8/2016 | Kobayashi et al. | |
| 2016/0291476 | A1 | 10/2016 | Godet et al. | |
| 2016/0299435 | A1 | 10/2016 | Ouyang et al. | |
| 2016/0357107 | A1 | 12/2016 | Buchberger, Jr. et al. | |
| 2017/0154797 | A1 | 6/2017 | Babayan et al. | |
| 2017/0184976 | A1 | 6/2017 | Ouyang et al. | |
| 2017/0232485 | A1 | 8/2017 | Hashimoto | |
| 2017/0278724 | A1 | 9/2017 | Higuchi et al. | |
| 2017/0363960 | A1 * | 12/2017 | Babayan | G03F 7/38 |
| 2017/0365493 | A1 | 12/2017 | Zhang et al. | |
| 2018/0004094 | A1 | 1/2018 | Hanson et al. | |
| 2018/0107117 | A1 | 4/2018 | Ouyang et al. | |
| 2018/0117641 | A1 | 5/2018 | Jung et al. | |
| 2018/0190518 | A1 | 7/2018 | Godet et al. | |
| 2018/0217504 | A1 * | 8/2018 | Hanson | C23C 16/54 |
| 2019/0187563 | A1 * | 6/2019 | Babayan | H01L 21/67017 |
| 2022/0004104 | A1 * | 1/2022 | Babayan | G03F 7/26 |
| 2023/0183854 | A1 * | 6/2023 | Hatano | C23C 14/541 204/192.12 |

FOREIGN PATENT DOCUMENTS

| | | | |
|---|---|---|---|
| CN | 101667543 | A | 3/2010 |
| JP | H097939 | A | 1/1997 |
| JP | H1012540 | A | 1/1998 |
| JP | H10135127 | A | 5/1998 |
| JP | H11102855 | A | 4/1999 |
| JP | 2000164505 | A | 6/2000 |
| JP | 2002151376 | A | 5/2002 |
| JP | 2003-124088 | A | 4/2003 |
| JP | 2003324064 | A | 11/2003 |
| JP | 2004336081 | A | 11/2004 |
| JP | 2006-032605 | A | 2/2006 |
| JP | 2006032606 | A | 2/2006 |
| JP | 200834779 | A | 2/2008 |
| JP | 2008177494 | A | 7/2008 |
| JP | 201087116 | A | 4/2010 |
| JP | 201316698 | A | 1/2013 |
| JP | 2014096500 | A | 5/2014 |
| JP | 2014103263 | A | 6/2014 |
| JP | 2014-160819 | A | 9/2014 |
| JP | 2015-122503 | A | 7/2015 |
| KR | 10-2004-0060413 | | 7/2004 |
| KR | 10-2009-0044420 | | 5/2009 |
| TW | 200421040 | A | 10/2004 |

(56) **References Cited**

FOREIGN PATENT DOCUMENTS

| | | | |
|---|---|---|---|
| TW | 200736858 | A | 10/2007 |
| WO | 2008-085681 | A2 | 7/2008 |
| WO | 2014/179093 | A1 | 11/2014 |

OTHER PUBLICATIONS

Office Action for U.S. Appl. No. 15/196, 725 (024063US) dated Sep. 13, 2017.
International Search Report and Written Opinion for International Application No. PCT/US2017/030511 (024063PCT) dated Sep. 21, 2017.
Office Action for Taiwan Application No. 106119960 (APPM/024063TW) dated Jul. 18, 2019.
Search Report for Taiwan Application No. 106119960 (APPM/024063TW) dated Jul. 18, 2019.
Office Action for Japanese Application No. 2018-568845 (APPM/024603JP01) dated Jan. 7, 2020.
Extended European Search Report for European Application No. 17820718.9 {APPM/024063EP) dated Jan. 23, 1020.
Taiwan Office Action dated May 6, 2020 for Application No. 108135206 (APPM/024063TW01DIV).
Search Report for Taiwan Application No. 105139189 (APPM/023506TW) dated Feb. 18, 2020.
Office Action for Taiwan Application No. 105139189 (APPM/023506TW) dated Feb. 27, 2020.
Chinese Office Action dated Jan. 7, 2021, for Chinese Patent Application No. 201611076231.6.
Notice of Allowance for U.S. Appl. No. 16/272,962 (APPM/023506US01DIV) dated May 7, 2021.
Extended European Search Report for European Application No. 17820718.9 (APPM/024063EP) dated Jan. 23, 2020.
Office Action from Japanese Patent Application No. 2020-184847 dated Jun. 14, 222.
Office Action and Search Report for Japanese Application No. 2020-184847 (APPM/024603JPD01) dated Oct. 5, 2021, 6 pages.
Office Action for Taiwan Application No. 111110266 (APPM/023506TW02DIV) dated Dec. 9, 2022.
Office Action from Japanese Patent Application No. 2020-184847 (APPM/23506JP01DOV) dated Dec. 13, 222.
Korean Office Action for Application No. 10-2016-0160617 dated Nov. 19, 2023.

* cited by examiner

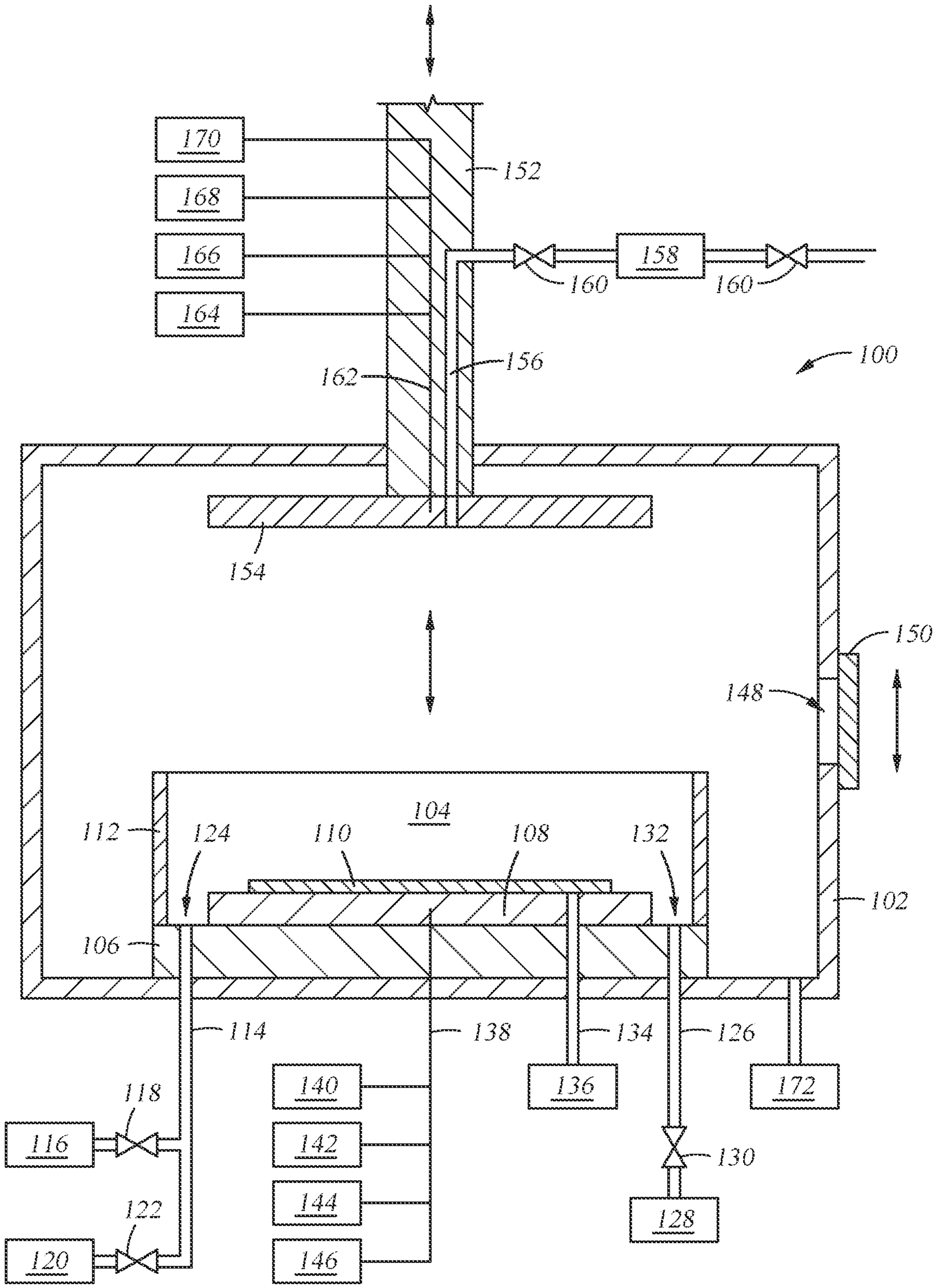
170
168
166
164
152
158
160
160
162
156
100
154
150
148
104
112
124
110
108
132
102
106
114
138
134
126
140
136
172
118
116
142
130
122
144
128
120
146

Fig. 1

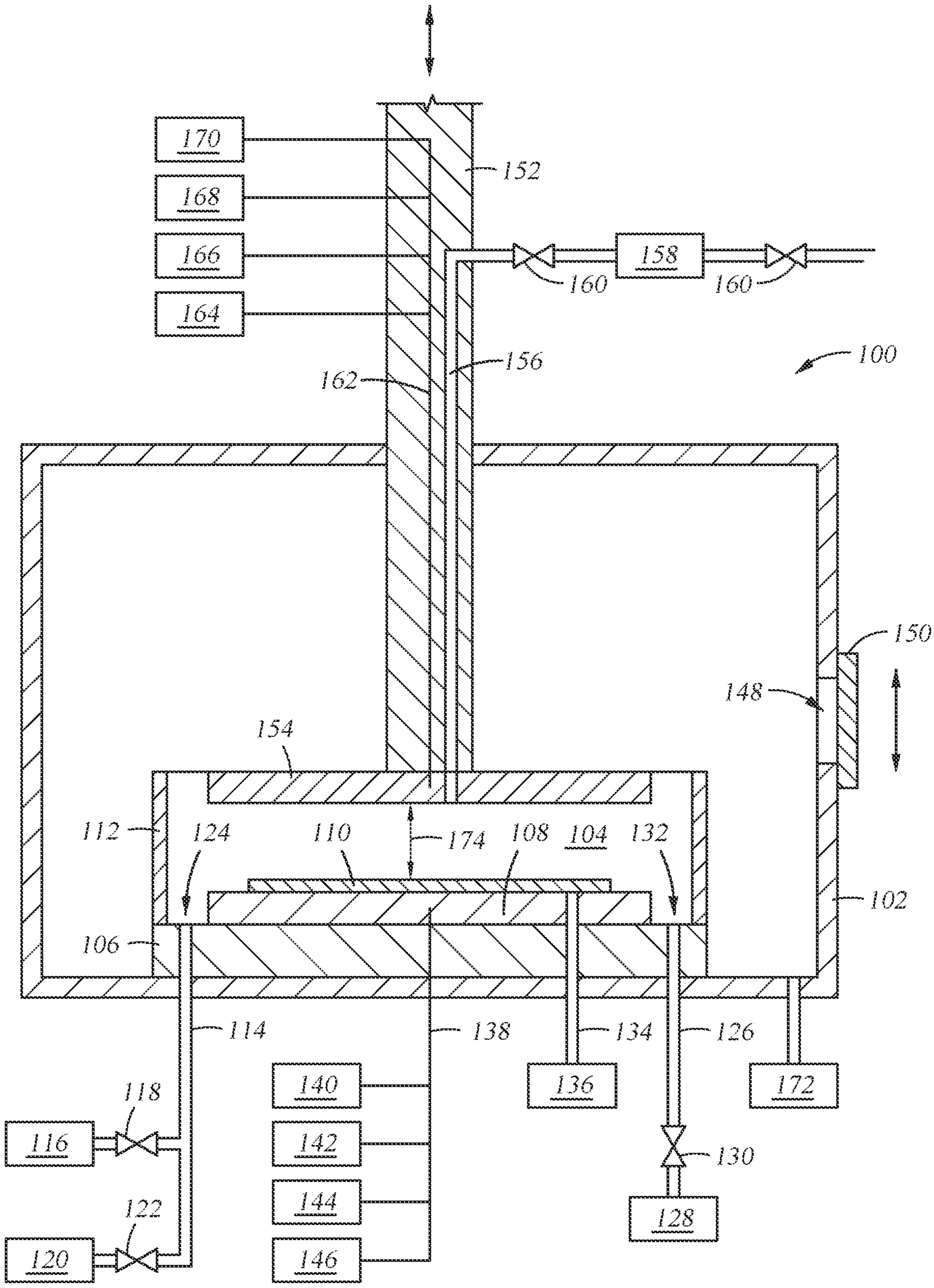
170
168
166
164
152
158
160
160
156
162
100
150
148
154
112
124
110
174
108
104
132
102
106
114
138
134
126
140
136
172
118
116
142
130
122
144
128
120
146

Fig. 2

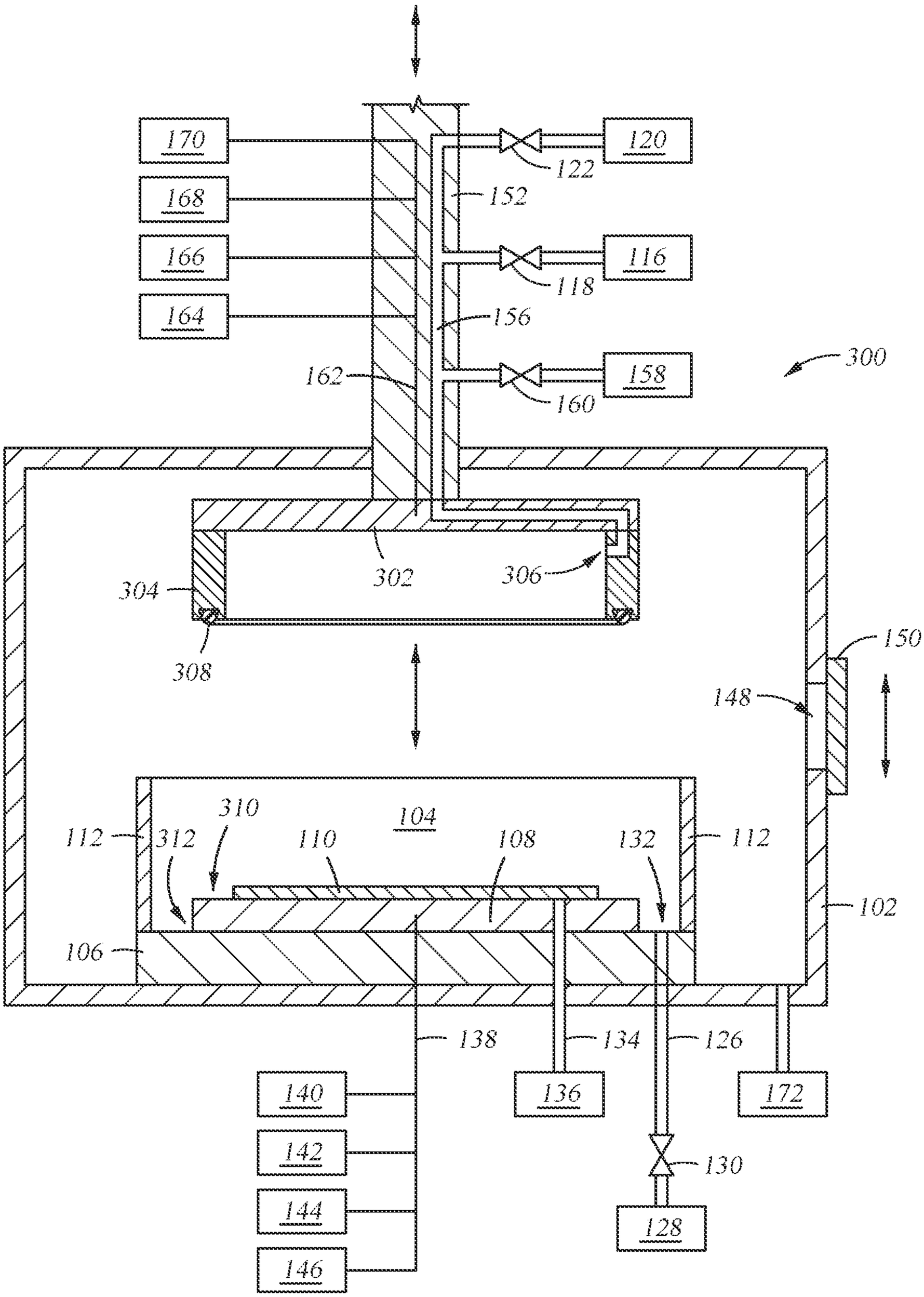
170
168
166
164
120
122
152
116
118
156
158
160
162
300
302
304
306
308
150
148
104
310
112
312
110
108
132
112
102
106
138
134
126
140
142
144
146
136
172
130
128

*Fig. 3*

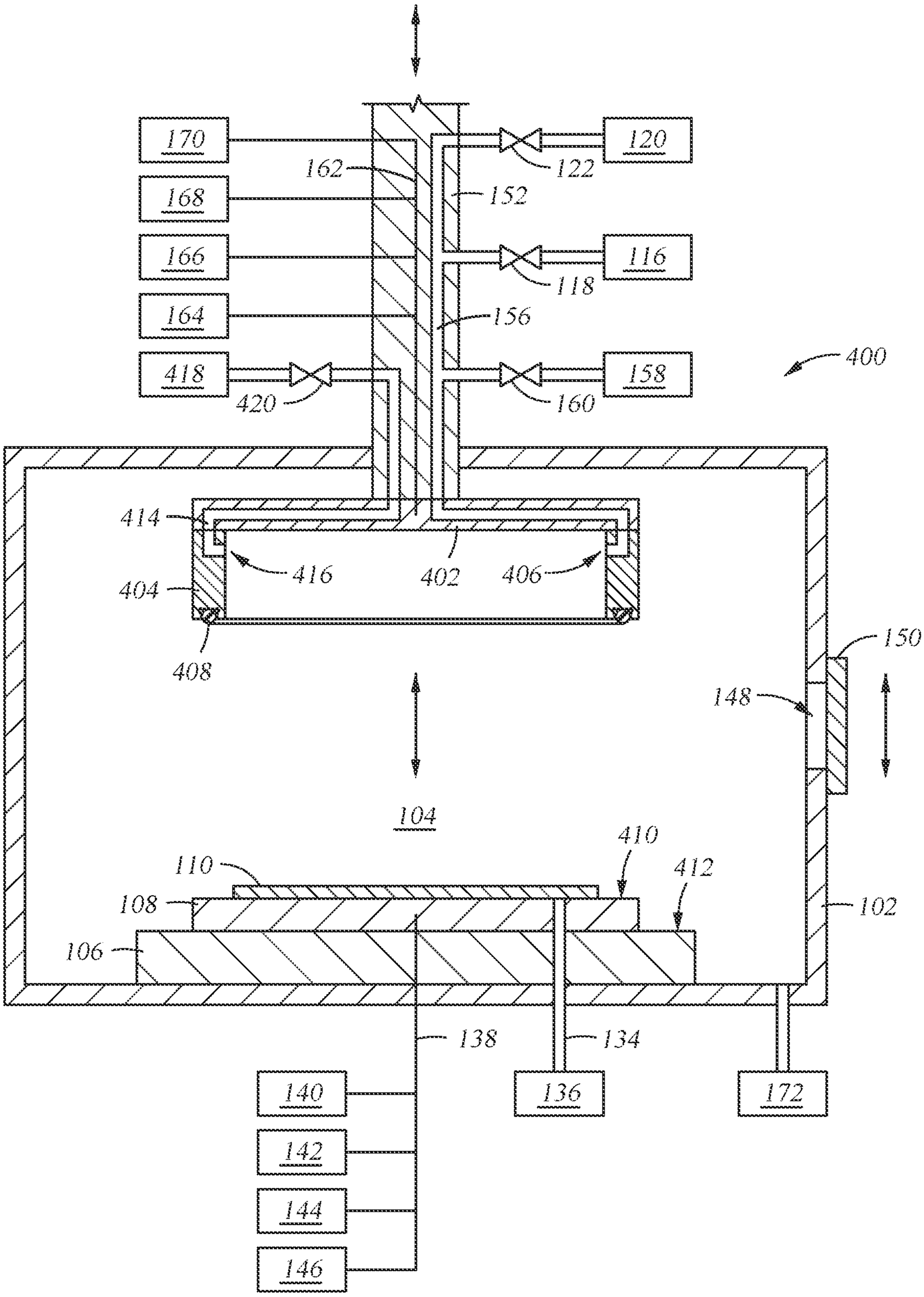
170
168
166
164
418
162
152
122
120
118
116
156
420
160
158
400
414
416
402
406
404
408
150
148
104
410
412
110
108
106
102
138
134
140
142
144
146
136
172

*Fig. 4*

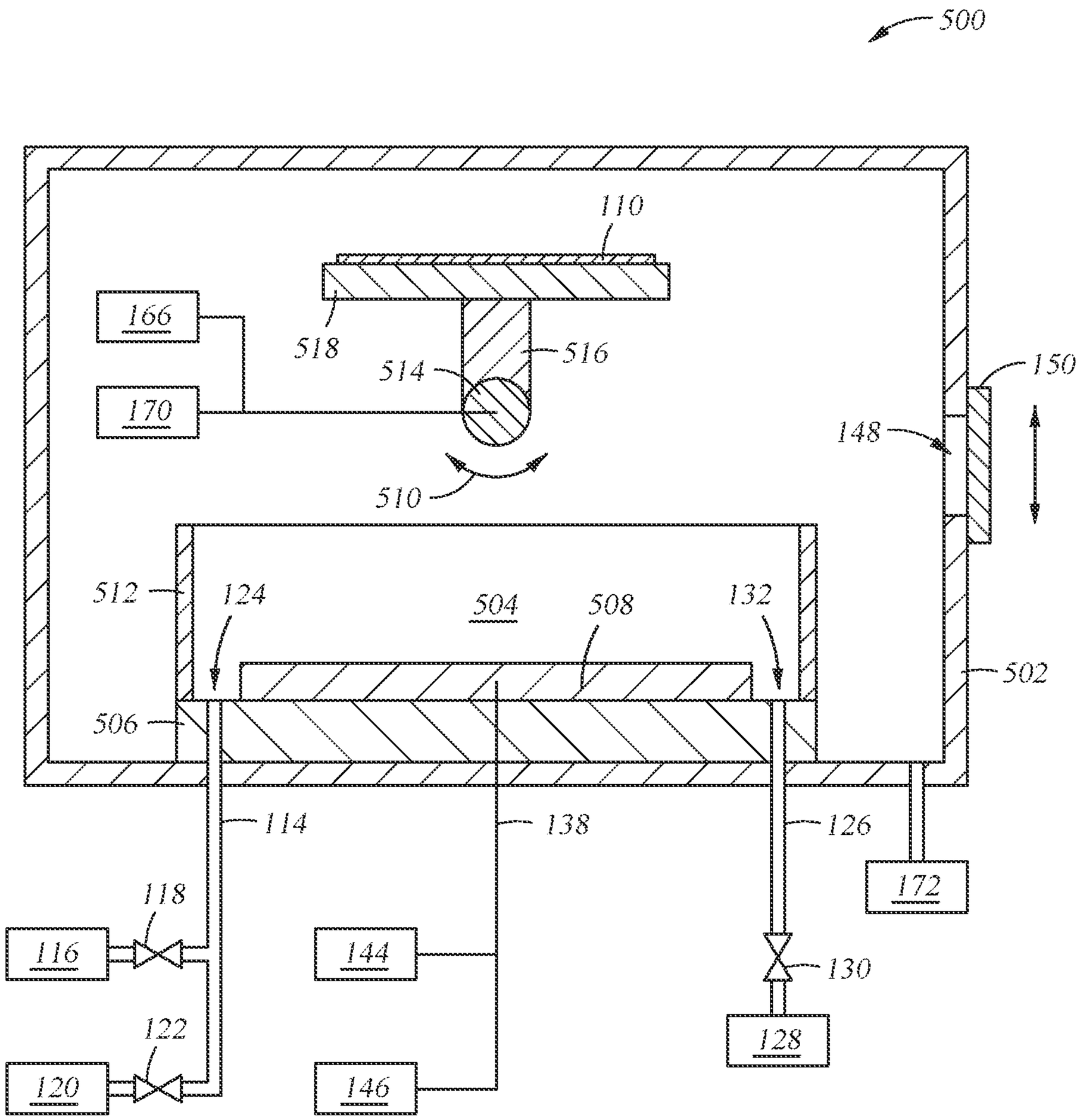
500
110
166
518
516
514
170
150
148
510
512
124
504
508
132
502
506
114
138
126
172
118
116
144
130
122
120
146
128

*Fig. 5*

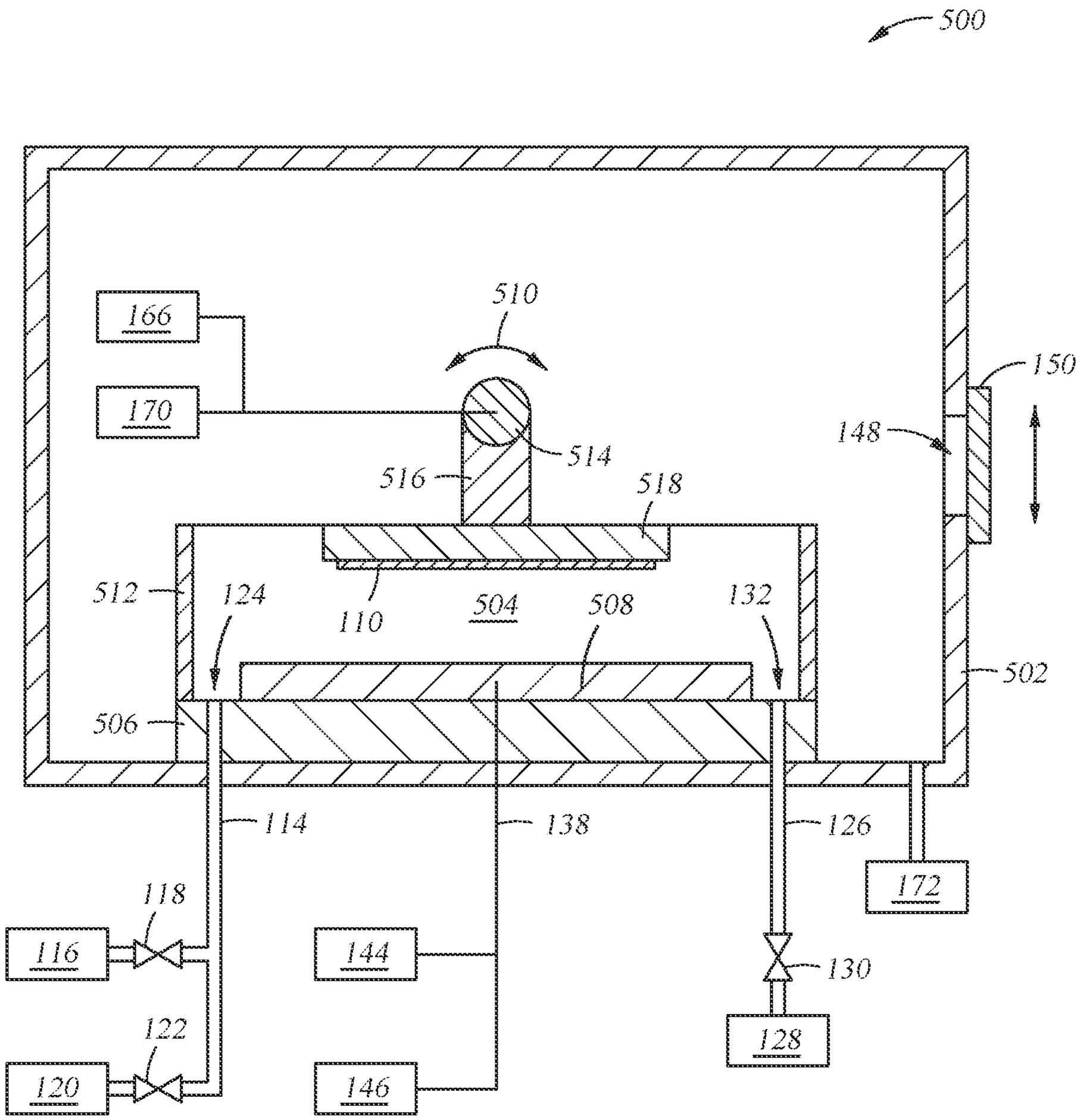
500
166
170
510
514
516
518
150
148
512
124
110
504
508
132
502
506
114
138
126
172
118
116
144
130
122
120
146
128

*Fig. 6*

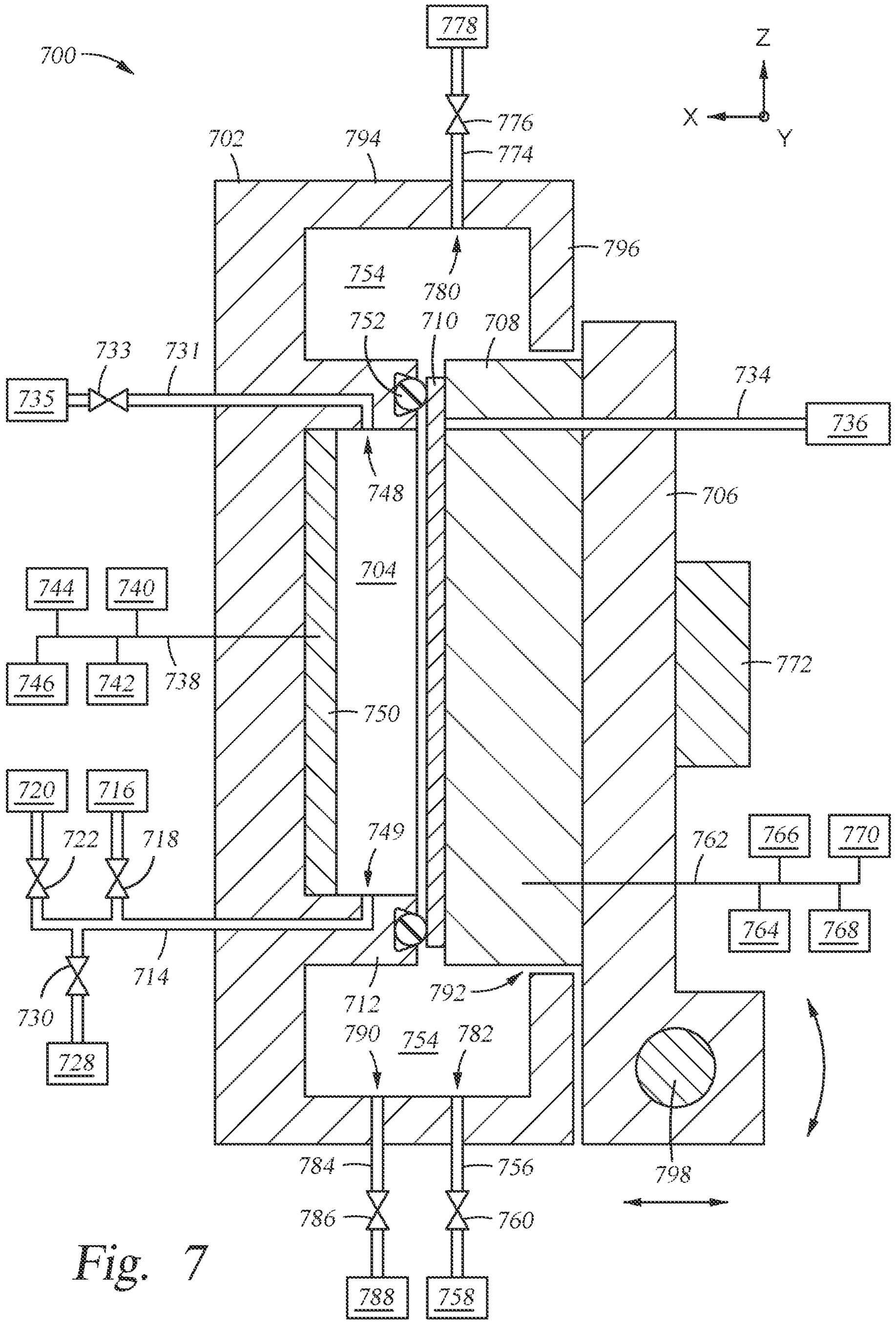
700
778
776
774
702
794
796
754
780
752
710
708
733
731
735
734
736
748
706
704
744
740
746
742
738
772
750
720
716
722
718
749
762
766
770
764
768
714
730
728
712
792
790
754
782
784
756
786
760
788
758
798
Z
X
Y

Fig. 7

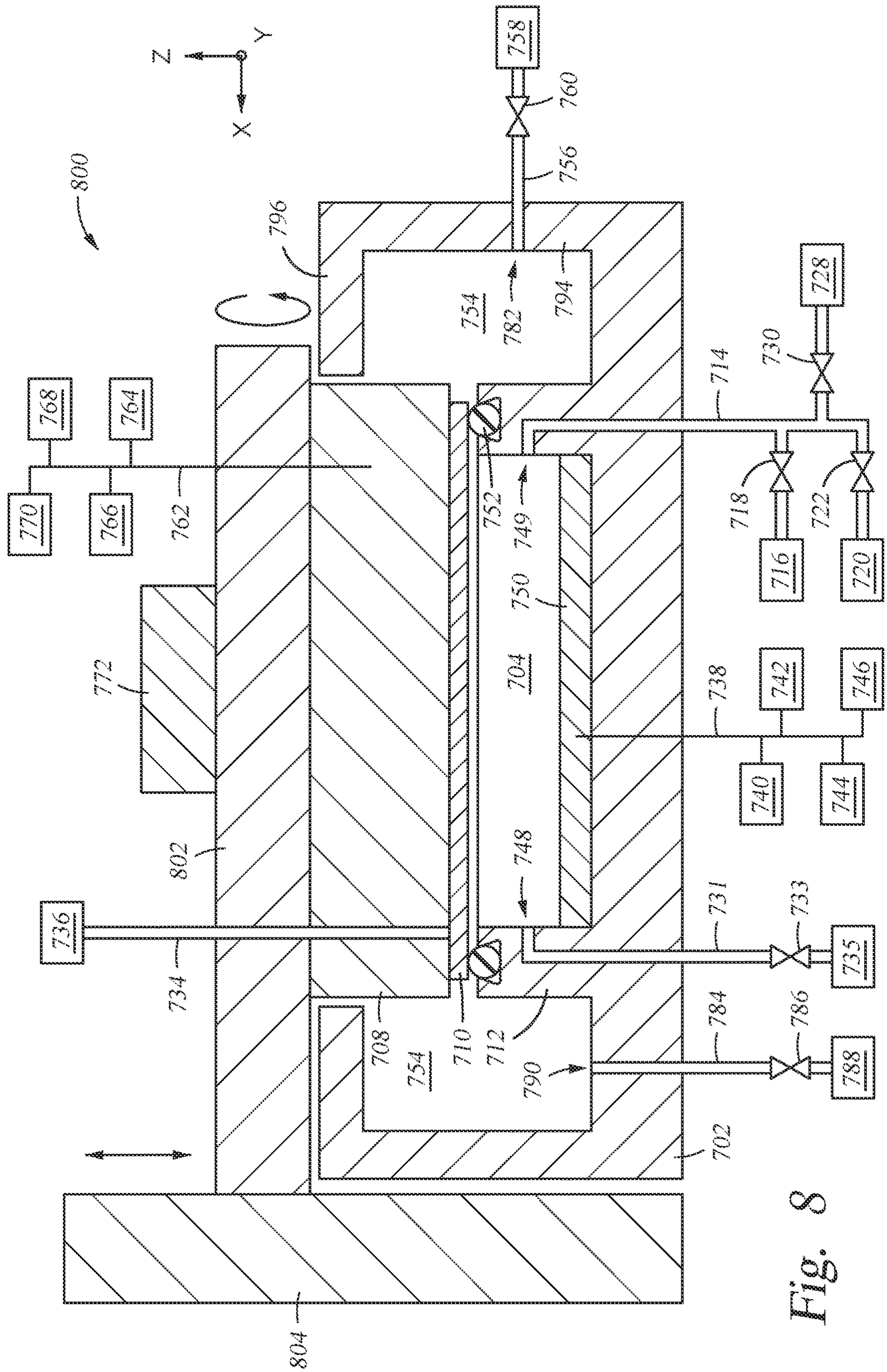
Z
Y
X
800
796
758
760
756
754
782
794
728
730
714
768
764
770
766
762
718
722
716
720
752
749
750
704
738
742
746
740
744
772
802
748
736
734
731
733
735
784
786
788
708
710
712
754
790
702
804

Fig. 8

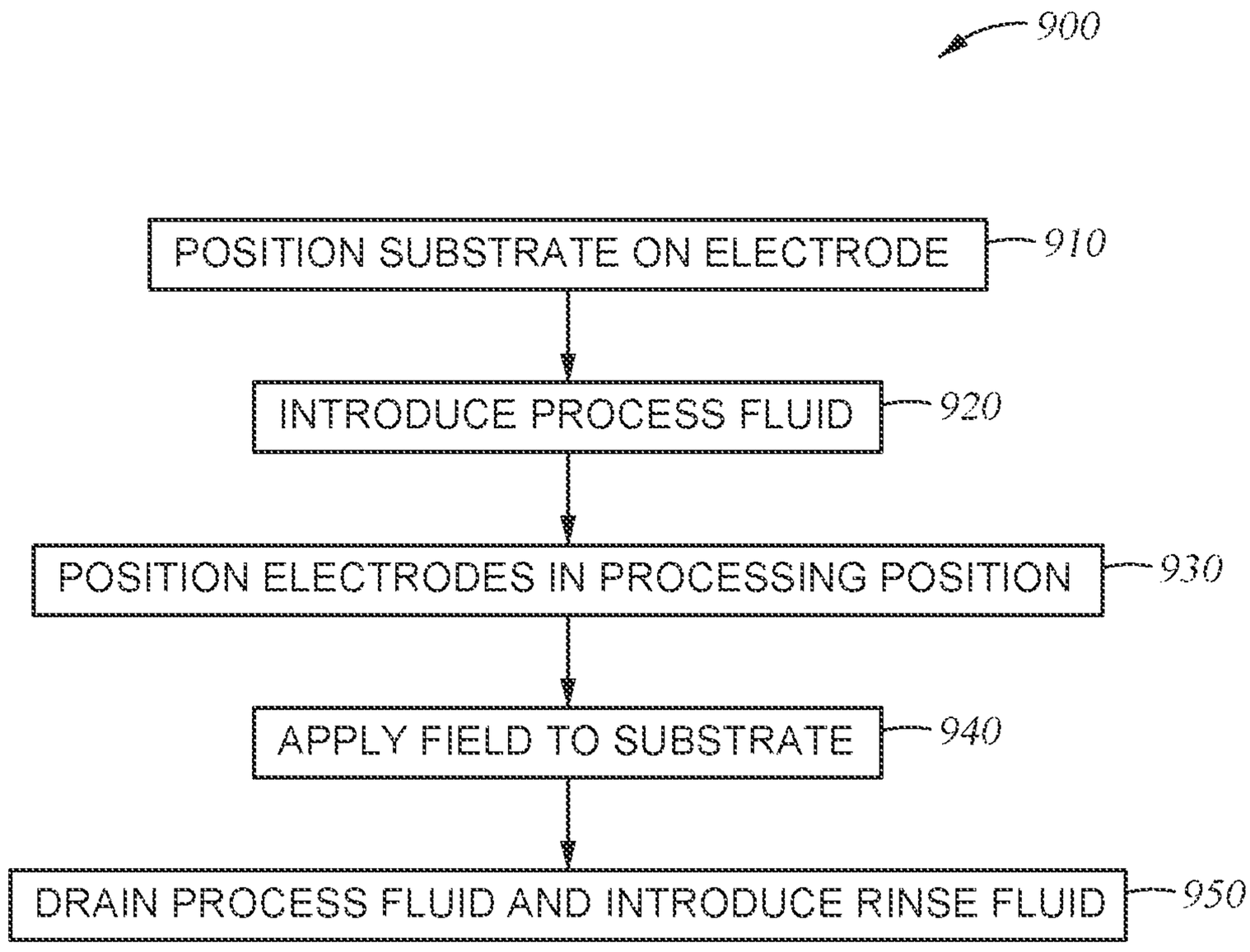
900
POSITION SUBSTRATE ON ELECTRODE
910
INTRODUCE PROCESS FLUID
920
POSITION ELECTRODES IN PROCESSING POSITION
930
APPLY FIELD TO SUBSTRATE
940
DRAIN PROCESS FLUID AND INTRODUCE RINSE FLUID
950

*Fig. 9*

# METHOD AND APPARATUS FOR POST EXPOSURE PROCESSING OF PHOTORESIST WAFERS

## CROSS-REFERENCE TO RELATED APPLICATIONS

This application is a divisional of U.S. patent application Ser. No. 16/272,962, filed Feb. 11, 2019, which claims benefit to U.S. patent application Ser. No. 14/989,488, filed Jan. 6, 2016, which claims benefit to U.S. Provisional Patent Application No. 62/261,171, filed Nov. 30, 2015, and U.S. Provisional Patent Application No. 62/267,531, filed Dec. 15, 2015, all of which are hereby incorporated by reference in their entirety.

## BACKGROUND

### Field

The present disclosure generally relates to methods and apparatus for processing a substrate, and more specifically to methods and apparatus for improving photolithography processes.

### Description of the Related Art

Integrated circuits have evolved into complex devices that can include millions of components (e.g., transistors, capacitors and resistors) on a single chip. Photolithography is a process that may be used to form components on a chip. Generally the process of photolithography involves a few basic stages. Initially, a photoresist layer is formed on a substrate. A chemically amplified photoresist may include a resist resin and a photoacid generator. The photoacid generator, upon exposure to electromagnetic radiation in the subsequent exposure stage, alters the solubility of the photoresist in the development process. The electromagnetic radiation may have any suitable wavelength, for example, a 193 nm ArF laser, an electron beam, an ion beam, or other suitable source.

In an exposure stage, a photomask or reticle may be used to selectively expose certain regions of the substrate to electromagnetic radiation. Other exposure methods may be maskless exposure methods. Exposure to light may decompose the photo acid generator, which generates acid and results in a latent acid image in the resist resin. After exposure, the substrate may be heated in a post-exposure bake process. During the post-exposure bake process, the acid generated by the photoacid generator reacts with the resist resin, changing the solubility of the resist during the subsequent development process.

After the post-exposure bake, the substrate, particularly the photoresist layer, may be developed and rinsed. Depending on the type of photoresist used, regions of the substrate that were exposed to electromagnetic radiation may either be resistant to removal or more prone to removal. After development and rinsing, the pattern of the mask is transferred to the substrate using a wet or dry etch process.

The evolution of chip design continually requires faster circuitry and greater circuit density. The demands for greater circuit density necessitate a reduction in the dimensions of the integrated circuit components. As the dimensions of the integrated circuit components are reduced, more elements are required to be placed in a given area on a semiconductor integrated circuit. Accordingly, the lithography process must transfer even smaller features onto a substrate, and lithography must do so precisely, accurately, and without damage. In order to precisely and accurately transfer features onto a substrate, high resolution lithography may use a light source that provides radiation at small wavelengths. Small wavelengths help to reduce the minimum printable size on a substrate or wafer. However, small wavelength lithography suffers from problems, such as low throughput, increased line edge roughness, and/or decreased resist sensitivity.

In a recent development, an electrode assembly is utilized to generate an electric field to a photoresist layer disposed on the substrate prior to or after an exposure process so as to modify chemical properties of a portion of the photoresist layer where the electromagnetic radiation is transmitted to for improving lithography exposure/development resolution. However, the challenges in implementing such systems have not been overcome.

Therefore, there is a need for improved methods and apparatus for improving photolithography processes.

## SUMMARY

In one embodiment, a substrate processing apparatus is provided. The apparatus includes a chamber body defining a processing volume and a pedestal disposed within the processing volume. One or more fluid sources may be coupled to the processing volume through the pedestal and a drain may be coupled to the processing volume through the pedestal. A first electrode is coupled to the pedestal and a fluid containment ring is coupled to the pedestal radially outward of the first electrode. A moveable stem may be disposed opposite the pedestal and extend through the chamber body, and a second electrode may be coupled to the stem.

In another embodiment, a substrate processing apparatus is provided. The apparatus includes a chamber body defining a processing volume and a pedestal is disposed in the processing volume. A drain may be coupled to the processing volume through the pedestal, a first electrode may be coupled to the pedestal, and a fluid containment ring may be coupled to the pedestal radially outward of the first electrode. A moveable stem may be disposed opposite the pedestal and extend through the chamber body. A second electrode may be coupled to the stem and a dielectric containment ring may be coupled to the second electrode. One or more fluid sources may be coupled to the processing volume through the dielectric containment ring.

In yet another embodiment, a substrate processing apparatus is provided. The apparatus includes a chamber body defining a processing volume, a pedestal may be disposed in the processing volume, and a first electrode may be coupled to the pedestal. A moveable stem may be disposed opposite the pedestal and extend through the chamber body. A second electrode may be coupled to the stem and a dielectric containment ring may be coupled to the second electrode. An elastomeric O-ring may be coupled to the dielectric containment ring opposite the second electrode. One or more fluid sources, a drain, and a purge gas source may each be coupled to the processing volume through the dielectric containment ring.

## BRIEF DESCRIPTION OF THE DRAWINGS

So that the manner in which the above recited features of the present disclosure can be understood in detail, a more particular description of the disclosure, briefly summarized above, may be had by reference to embodiments, some of which are illustrated in the appended drawings. It is to be

noted, however, that the appended drawings illustrate only exemplary embodiments and are therefore not to be considered limiting of its scope, may admit to other equally effective embodiments.

FIG. **1** schematically illustrates a cross-sectional view of an immersion field guided post exposure bake chamber according to one embodiment described herein.

FIG. **2** schematically illustrates a cross-sectional view of the chamber of FIG. **1** in a processing position according to one embodiment described herein.

FIG. **3** schematically illustrates a cross-sectional view of an immersion field guided post exposure bake chamber according to one embodiment described herein.

FIG. **4** schematically illustrates a cross-sectional view of an immersion field guided post exposure bake chamber according to one embodiment described herein.

FIG. **5** schematically illustrates a cross-sectional view of an immersion field guided post exposure bake chamber according to one embodiment described herein.

FIG. **6** schematically illustrates a cross-sectional view of the chamber of FIG. **5** in a processing position according to one embodiment described herein.

FIG. **7** schematically illustrates a cross-sectional view of an immersion field guided post exposure bake chamber according to one embodiment described herein.

FIG. **8** schematically illustrates a cross-sectional view of an immersion field guided post exposure bake chamber according to one embodiment described herein.

FIG. **9** illustrates operations of a method for performing an immersion post exposure bake process according to one embodiment described herein.

To facilitate understanding, identical reference numerals have been used, where possible, to designate identical elements that are common to the figures. It is contemplated that elements and features of one embodiment may be beneficially incorporated in other embodiments without further recitation.

## DETAILED DESCRIPTION

FIG. **1** schematically illustrates a cross-sectional view of a processing chamber **100** according to one embodiment described herein. The processing chamber **100** includes a chamber body **102** which defines a processing volume **104**. A pump **172** may be fluidly coupled to the processing volume **104** through the chamber body **102** and may be configured to generate a vacuum within the processing volume **104** or exhaust fluids and other materials from the processing volume **104**. A slit valve **148** may be formed in the chamber body **102** to provide for ingress and egress of a substrate for processing. A slit valve door **150** may be coupled to the chamber body **102** adjacent the slit valve **148**. Generally, the chamber body **102** may be formed from materials suitable for performing immersion field guided post exposure bake (iFGPEB) processes therein, such as aluminum, stainless steel, and alloys thereof. The chamber body **102** may also be formed from various other materials such as polymers, for example, polytetrafluoroethylene (PTFE), or high temperature plastics, such as polyether ether ketone (PEEK).

A pedestal **106** may be disposed in the processing volume **104** and may be coupled to the chamber body **102**. In one embodiment, the pedestal **106** may be fixably coupled to the chamber body **102**. In another embodiment, the pedestal **106** may be rotatably coupled to the chamber body **102**. In this embodiment, a motor (not shown) may be coupled to the pedestal **106** and the motor may be configured to impart rotational movement to the pedestal **106**. It is contemplated that rotation of the pedestal **106** may be utilized to spin dry substrates after processing of the substrates.

A first electrode **108** may be coupled to the pedestal **106**. The first electrode **108** may be fixably coupled to the pedestal **106** or may be rotatably coupled to the pedestal **106**. In embodiments where the first electrode **108** is rotatably coupled to the pedestal **106**, the rotation of the first electrode **108** may be utilized to spin dry substrates after processing. The first electrode **108** may be formed from an electrically conductive metallic material. In addition, the material utilized for the first electrode **108** may be a non-oxidative material. The materials selected for the first electrode **108** may provide for desirable current uniformity and low resistance across the surface of the first electrode **108**. In certain embodiments, the first electrode **108** may be a segmented electrode configured to introduce voltage non-uniformities across the surface of the first electrode **108**. In this embodiment, a plurality of power sources may be utilized to power different segments of the first electrode **108**.

A fluid containment ring **112** may be coupled to the pedestal **106** radially outward from the first electrode **108**. The fluid containment ring **112** may be manufactured from a non-conductive material, such as a ceramic material or a high temperature plastic material. The pedestal **106** and the fluid containment ring **112** may have a substantially similar diameter and a distance radially inward from the fluid containment ring **112** to the first electrode **108** may be between about 0.1 cm and about 3.0 cm, such as between about 0.5 cm and about 2.0 cm, for example, about 1.0 cm. The fluid containment ring **112** may extend from the pedestal **106** to further define the processing volume **104**. Generally, a top of the fluid containment ring **112** may be co-planar with or disposed below a plane occupied by the slit valve **148**.

The pedestal **106** may include one or more conduits disposed therethrough and an integrally disposed heating apparatus (not shown) may be disposed within the pedestal **106** to preheat fluids traveling through the conduits. A process fluid source **116** may be fluidly coupled to the processing volume **104** via a conduit **114**. The conduit **114** may extend from the process fluid source **116** through the chamber body **102** and the pedestal **106** to the processing volume **104**. In one embodiment, a fluid outlet **124** may be formed in the pedestal **106** radially outward from the first electrode **108** and radially inward from the fluid containment ring **112**. A valve **118** may be disposed on the conduit **114** between the fluid outlet **124** and the process fluid source **116**. A rinse fluid source **120** may also be fluidly coupled to the processing volume **104** via the fluid conduit **114**. A valve **122** may be disposed on the conduit **114** between the fluid outlet **124** and the rinse fluid source **120**. The process fluid source **116** may be configured to deliver fluids utilized during application of an electrical field during an iFGPEB process. The rinse fluid source **120** may be configured to deliver fluids to rinse substrates after an iFGPEB process has been performed.

A drain **128** may be fluidly coupled to the processing volume **104** via a conduit **126**. The conduit **126** may extend from the drain **128** through the chamber body **102** and the pedestal **106**. In one embodiment, a fluid inlet **132** may be formed in the pedestal **106** radially outward from the first electrode **108** and radially inward from the fluid containment ring **112**. A valve **130** may be disposed on the conduit **126** between the fluid inlet **132** and the drain **128**. Fluids, such as fluid from the process fluid source **116** and the rinse fluid

source **120**, may be removed from the processing volume **104** via the fluid inlet **132** and drain **128**.

A vacuum source **136** may be coupled via a conduit **134** to a top surface of the first electrode **108**. The conduit **134** may extend through the chamber body **102**, the pedestal **106**, and the first electrode **108**. As illustrated, a substrate **110** may be disposed on the first electrode **108**. The conduit **134** may be positioned underneath a region covered by the substrate **110** when the substrate **110** is positioned on the first electrode **108**. The vacuum source **136** may be configured to draw a vacuum to secure the substrate **110** to the first electrode **108**. In certain embodiment, the vacuum source **136** and the conduit **134** may be optional if the substrate secured on the first electrode **108** by other means, such as electrostatic chucking or mechanical apparatus (i.e. rings, pins, etc.)

A heat source **140** may be electrically coupled to the first electrode **108** via a conduit **138**. The heat source **140** may provide power to one or more heating elements, such as resistive heaters, disposed within the first electrode **108**. It is also contemplated that the heat source **140** may provide power to heating elements disposed within the pedestal **106**. The heat source **140** is generally configured to heat either the first electrode **108** and/or the pedestal **106** to facilitate preheating of fluid during iFGPEB processes. In one embodiment, the heat source **140** may be configured to heat the first electrode **108** to a temperature of between about 70° C. and about 130° C., such as about 110° C. In other embodiments, the heat source may be coupled to the conduits **114** to preheat fluids entering the processing volume **104** from the process fluid source **116** and/or the rinse fluid source **120**. A temperature sensing apparatus **142** may also be coupled to the first electrode **108** via the conduit **138**. The temperature sensing apparatus **142**, such as a thermocouple or the like, may be communicatively coupled to the heat source **140** to provide temperature feedback and facilitate heating of the first electrode **108**.

A power source **144** is also coupled to the first electrode **108** via the conduit **138**. The power source **144** may be configured to supply, for example, between about 1 V and about 20 kV to the first electrode. Depending on the type of process fluid utilized, current generated by the power source **144** may be on the order of tens of nano-amps to hundreds of milliamps. In one embodiment, the power source **144** may be configured to generate electric fields ranging from about 1 kV/m to about 2 MeV/m. In some embodiments, the power source **144** may be configured to operate in either voltage controlled or current controlled modes. In both modes, the power source may output AC, DC, and/or pulsed DC waveforms. Square or sine waves may be utilized if desired. The power source **144** may be configured to provide power at a frequency of between about 0.1 Hz and about 1 MHz, such as about 5 kHz. The duty cycle of the pulsed DC power or AC power may be between about 5% and about 95%, such as between about 20% and about 60%.

The rise and fall time of the pulsed DC power or AC power may be between about 1 ns and about 1000 ns, such as between about 10 ns and about 500 ns. A sensing apparatus **146** may also be coupled to the first electrode **108** via the conduit **138**. The sensing apparatus **146**, such as a voltmeter or the like, may be communicatively coupled to the power source **144** to provide electrical feedback and facilitate control of the power applied to the first electrode **108**. The sensing apparatus **146** may also be configured to sense a current applied to the first electrode **108** via the power source **144**.

A moveable stem **152** may be disposed through the chamber body **102** opposite the pedestal **106**. The stem **152** is configured to move in the Z direction (i.e. towards and away from the pedestal **106**) and may be moved between a non-processing position as shown and a processing position (illustrated in FIG. **2**). A second electrode **154** may be coupled to the stem **152**. The second electrode **154** may be formed from the same materials as the first electrode **108**. Similar to the first electrode **108**, the second electrode **154** may be segmented in certain embodiments.

A purge gas source **158** may be fluidly coupled to the processing volume **104** via a conduit **156**. The conduit **156** may extend from the purge gas source **158** through the stem **152** and the second electrode **154**. In certain embodiments, the conduit **156** may be formed from a flexible material to accommodate movement of the stem **152**. Although not illustrated, in an alternative embodiment, the conduit may extend through the stem **152** to the processing volume **104** and not the second electrode **154**. A valve **160** may be disposed on the conduit **156** between the stem **152** and the purge gas source **158**. Gases provided by the purge gas source **158** may include nitrogen, hydrogen, inert gases and the like to purge the processing volume **104** during or after iFGPEB processing. When desired, purge gases may be exhausted from the processing volume **104** via the pump **172**.

A heat source **170**, temperature sensing apparatus **168**, a power source **166**, and a sensing apparatus **164** may be communicatively coupled to the second electrode **154** via a conduit **162**. The heat source **170**, the temperature sensing apparatus **168**, the power source **166**, and the sensing apparatus **164** may be configured similarly to the heat source **140**, the temperature sensing apparatus **142**, the power source **144**, and the sensing apparatus **146**.

The embodiments described herein relate to methods as well as the apparatus for performing immersion field guided post exposure bake processes. The methods and apparatuses disclosed herein may increase the photoresist sensitivity and productivity of photolithography processes. The random diffusion of acids generated by a photoacid generator during a post-exposure bake procedure contributes to line edge/width roughness and reduced resist sensitivity. An electrode assembly may be utilized to apply an electric field to the photoresist layer during photolithography processes. The field application may control the diffusion of the charged species generated by the photoacid generator.

An air gap defined between the photoresist layer and the electrode assembly may result in voltage drop applied to the electrode assembly, thus, adversely lowering the level of the electric field desired to be generated to the photoresist layer. As a result of the voltage drop, levels of the electric field at the photoresist layer may result in insufficient or inaccurate voltage power to drive or create charged species in the photoresist layer in certain desired directions. Thus, diminished line edge profile control to the photoresist layer may prevalent.

An intermediate medium may be disposed between the photoresist layer and the electrode assembly to prevent the air gap from being created so as to maintain the level of the electric field interacting with the photoresist layer at a certain desired level. By doing so, the charged species generated by the electric field may be guided in a desired direction along the line and spacing direction, preventing the line edge/width roughness that results from inaccurate and random diffusion. Accordingly, a controlled or desired level of electric field as generated may increase the accuracy and sensitivity of the photoresist layer to exposure and/or devel-

opment process. In one example, the intermediate medium may be non-gas phase medium, such as a slurry, gel, or liquid solution that may efficiently maintain voltage level as applied at a determined range when transmitting from the electrode assembly to the photoresist layer disposed on the substrate. Charges generated by the electric field may be transferred between the intermediate medium and the photoresist which may result in a net current flow. In certain embodiments, the net current flow may improve reactions characteristics, such as improving the reaction rate of the photoresist. Operating the power source **144** in a current controlled mode also advantageously enables control of the amount of charges that are transferred between the intermediate medium and the photoresist.

FIG. **2** schematically illustrates a cross-sectional view of the chamber **100** of FIG. **1** in a processing position according to one embodiment described herein. The stem **152** may be moved toward the pedestal **106** into a processing position. In the processing position, a distance **174** between the second electrode **154** and the substrate **110** may be between about 1 mm and about 1 cm, such as about 2 mm. Processing fluid may be delivered to the processing volume **104** defined and retained by the fluid containment ring **112** and the second electrode **154** may be partially or completely submerged when the stem **152** is located in the processing position. Power may be applied to one or both of the electrodes **108**, **154** to perform an iFGPEB process.

In some embodiments, the first electrode **108** and the second electrode **154** are configured to generate an electric field parallel to the x-y plane defined by the substrate **110**. For example, the electrodes **108**, **154** may be configured to generate an electric field in one of the y direction, x direction or other direction in the x-y plane. In one embodiment, the electrodes **108**, **154** are configured to generate an electric field in the x-y plane and in the direction of latent image lines, which may be patterned on the substrate **110**. In another embodiment, the electrodes **108**, **154** are configured to generate an electric field in the x-y plane and perpendicular to the direction of latent image lines patterned on the substrate **110**. The electrodes **108**, **154** may additionally or alternatively be configured to generate an electric field in the z-direction, such as, for example, perpendicular to the substrate **110**.

FIG. **3** schematically illustrates a cross-sectional view of an iFGPEB chamber **300** according to one embodiment described herein. A third electrode **302** may be similar to the second electrode **154** in certain aspects. A dielectric containment ring **304** may be coupled to the third electrode **302** opposite the stem **152**. The dielectric containment ring **304** may have a diameter similar to the diameter of the third electrode **302**. The dielectric containment ring **304** may be formed from a dielectric material, such as polymers or ceramics with suitable dielectric properties. An O-ring **308** may be coupled to the dielectric containment ring **304** opposite the third electrode **302** and extend circumferentially about the dielectric containment ring **304**. The O-ring **308** may be formed from an elastomeric material, such as a polymer and may be compressible when the stem **152** is disposed in a processing position.

For example, when the stem **152** is disposed in the processing position (illustrated in FIG. **2**) the O-ring **308** may contact a region **310** of the first electrode **108** or a region **312** of the pedestal **106**. The diameter of the third electrode **302** and the diameter of the dielectric containment ring **304** may be selected depending on the desired region **310**, **312** of contact by the O-ring **308**. It is contemplated that when the O-ring **308**, and third electrode **302**/dielectric containment ring **304** are configured to contact the region **312** on the pedestal **106**, the point of contact by the O-ring **308** may be radially inward from the fluid inlet **132** to provide for unrestricted fluid access to the drain **128**. The O-ring **308**, when the stem **152** is disposed in the processing position, may also be sized and positioned to contact an exclusion zone of the substrate **110**. Generally, the exclusion zone of the substrate **110** is a region of the substrate **110** radially inward a distance of about 1 mm to about 3 mm from the circumference of the substrate **110**. In this embodiment, the processing volume **104** may be defined by the substrate **110**, the dielectric containment ring **304**, and the third electrode **302**. Advantageously, a backside of the substrate **110** coupled to the first electrode **108** may remain unexposed to process or rinse fluids which aids in preventing fluid from entering the vacuum source **136**.

The rinse fluid source **120** may be fluidly coupled with the processing volume **104** via the conduit **156** which may extend through the stem **152**, the third electrode **302** and the dielectric containment ring **304**. A fluid outlet **306** of the conduit **156** may be disposed at an inner diameter of the dielectric containment ring **304**. The rinse fluid source **120** and the purge gas source **158** may also be coupled to the conduit **156**. Alternatively, the fluid conduit **156** may extend through the stem **152** above the third electrode **302** and extend radially outward of the third electrode **302** through the dielectric containment ring **304** to the fluid outlet **306**.

FIG. **4** schematically illustrates a cross-sectional view of an iFGPEB chamber **400** according to one embodiment described herein. The chamber **400** is similar to the chamber **300** in certain aspects, however, the fluid containment ring **112** is not coupled to the pedestal **106**. An exhaust **418** may be fluidly coupled to the processing volume **104** via a conduit **414** which may extend through the stem **152**, a fourth electrode **402** (which is coupled to the stem **152**), and a dielectric containment ring **404**. In certain embodiments, the conduit **414** may be formed from a flexible material to accommodate movement of the stem **152**. A fluid outlet **416** of the conduit **414** may be disposed at an inner diameter of the dielectric containment ring **404**. A valve may be disposed on the conduit **414** between the exhaust **418** and the stem **152**. Alternatively, the conduit **414** may extend through the stem **152** above the fourth electrode **402** and extend radially outward of the fourth electrode **402** through the dielectric containment ring **404** to the fluid outlet **416**.

Similar to the chamber **300**, when the stem **152** is disposed in a processing position (illustrated in FIG. **2**), the fourth electrode **402**, the dielectric containment ring **404**, and an O-ring **408** coupled circumferentially about the dielectric containment ring **404** opposite the fourth electrode **402**, may be sized such that the O-ring **408** contacts either the region **410** on the first electrode **108** or the region **412** of the pedestal **106**. During processing, various process and rinse fluid may be introduced to the processing volume **104** which is further defined by the dielectric containment ring **404** and the fourth electrode **402**. The fluids may be exhausted from the processing volume **104** via the fluid outlet **416** to the exhaust **418**.

Although not shown in FIGS. **1-4**, lift pins may extend through the pedestal **106** and/or first electrode **108** to facilitate positioning of the substrate **110** on the first electrode **108**. For example, when the stem **152** is in a non-processing raised position, the lift pins may extend upward and receive a substrate from a robot blade extending through the slit valve **148**. The lift pins may then retract and position the substrate **110** on the first electrode **108**.

FIG. **5** schematically illustrates a cross-sectional view of an iFGPEB chamber **500** according to one embodiment described herein. The chamber **500** includes a chamber body **502** defining a processing volume **504**, a pedestal **506**, a first electrode **508**, and a fluid containment ring **512** which may be similar in certain aspects to the chamber body **102**, the processing volume **104**, the pedestal **106**, the first electrode **108**, and the fluid containment ring **112**, except that the components of the chamber **500** are sized to accommodate a rotational stem **516** and a second electrode **518** coupled to the rotational stem **516**. The rotational stem **516** may be rotatably coupled to a bearing member **514**. The bearing member **514** may be coupled to the chamber body **502** such that the bearing member **514** rotates about an X or Y (horizontal) axis.

The substrate **110** may be disposed on the second electrode **518** in the non-processing position illustrated in FIG. **5**. FIG. **6** illustrates the chamber **500** of FIG. **5** in a processing position. The rotatable stem **516**, having received the substrate **110** on the second electrode **518**, may rotate about the horizontal axis to the processing position as illustrated. Fluid supplied to the processing volume **504** further defined by the fluid containment ring **512** may be in an amount suitable to partially or entirely submerge the second electrode **518**. An iFGPEB process may be performed and the rotatable stem **516** may rotate back to the non-processing position. The bearing member **514** may also be configured to rotate about the Z axis (vertical) to spin the rotatable stem **516** and second electrode **518** to expel fluid remaining on the substrate **110**.

FIG. **7** schematically illustrates a cross-sectional view of an immersion field guided post exposure bake chamber **700** according to one embodiment described herein. The chamber **700** includes a chamber body **702**, which may be manufactured from a metallic material, such as aluminum, stainless steel, and alloys thereof. The chamber body **702** may also be formed from various other materials such as polymers, for example, polytetrafluoroethylene (PTFE), or high temperature plastics, such as polyether ether ketone (PEEK). The body **702** includes a fluid containment ring **712** which may extend from the body **702** and at least partially define a first processing volume **704**. The body **702** may also include sidewalls **794** and a lid **796** which extends from the sidewalls **794**. The body **702**, the fluid containment ring **712**, the sidewalls **794**, and the lid **796** may define a second processing volume **754** which is formed radially outward from the first processing volume **704**. An opening **792** may be defined by the lid **796** and the opening **792** may be sized to accommodate passage of a substrate **710** therethrough.

A door **706** may be operably coupled to the chamber body **702** and disposed adjacent the lid **796**. The door **706** may be formed from materials similar to materials selected for the chamber body **702** and a shaft **798** may extend through the door **706**. Alternatively, the chamber body **702** may be formed from a first material, such as a polymer, and the door **706** may be formed from a second material, such as a metallic material. The door **706** may be coupled to a track (not shown) and the door may be configured to translate along the track in the X-axis. A motor (not shown) may be coupled to the door and/or the track to facilitate movement of the door **706** along the X-axis. Although the door **706** is illustrated in a processing position, the door **706** may be configured to rotate about the shaft **798** around the Z-axis. Prior to rotating, the door **706** may move away from the chamber body **702** along the X-axis and clear the lid **796** prior to rotating. For example, the door **706** may rotate about 90° from the illustrated processing position to a loading position where the substrate **710** may be loaded and unloaded from a first electrode **708** coupled to the door **706**.

The first electrode **708**, which may be similar to the first electrode **108**, is sized to accommodate attachment of the substrate **710** thereon. The first electrode **708** may also be sized to allow for passage through the opening **792** defined by the lid **796**. In one embodiment, the first electrode **708** may be fixably coupled to the door **706**. In another embodiment, the first electrode **708** may be rotatably coupled to the door **706**. In this embodiment, a motor **772** may be coupled to the door **706** opposite the first electrode **708** and the motor **772** may be configured to rotate the first electrode **708** about the X-axis. Rotation of the first electrode **708** may be utilized to spin dry the substrate **710** after iFGPEB processing. To perform spin drying, the door **706** may translate along the X-axis away from the fluid containment ring **712** such that the substrate **710** has not passed through the opening **792**. The motor **772** may be activated to spin the first electrode **708** (with the substrate **710** chucked to the first electrode) to remove fluids from surfaces of the substrate **710**.

A vacuum source **736** may be in fluid communication with a substrate receiving surface of the first electrode **708**. The vacuum source **736** may be coupled to a conduit **734** which extends from the vacuum source **736** through the door **706** and the first electrode **708**. Generally, the vacuum source **736** is configured to vacuum chuck the substrate **710** to the first electrode **708**. A heat source **764**, a temperature sensing apparatus **766**, a power source **768**, and a sensing apparatus **770** may also be coupled to the first electrode **708** via a conduit **762**. The heat source **764**, the temperature sensing apparatus **766**, the power source **768**, and the sensing apparatus **770** may be similarly configured to the heat source **140**, the temperature sensing apparatus **142**, the power source **144**, and the sensing apparatus **146** described in greater detail with regard to FIG. **1**.

A second electrode **750** may be coupled to the chamber body **702**. The fluid containment ring **712** may surround the second electrode **750** such that the first processing volume **704** is defined (when the door **706** is in the processing position) by the second electrode **750**, the fluid containment ring **712**, and the substrate **710**. An O-ring **752** may be coupled to the fluid containment ring **712** and the O-ring **752** may be formed from an elastomeric material, such as a polymer or the like. A circumference defined by the O-ring **752** may be sized to contact an exclusion zone of the substrate **710** when the substrate **710** is in the processing position as illustrated. The O-ring **752** may also be sized to contact an edge of the substrate **710**. By contacting the substrate **710**, it is contemplated that the O-ring **752** may prevent fluid from escaping the first processing volume **704** and reduce or eliminate the possibility of fluid entering the vacuum source **736**.

A process fluid source **716** may fluidly coupled to the first processing volume **704** via a conduit **714**. The conduit **714** may extend from the process fluid source **716** through the chamber body **702** and the fluid containment ring **712** to an inlet **749** adjacent the first processing volume **704**. A valve may be disposed on the conduit **714** between the inlet **749** and the process fluid source **716** to control delivery of processing fluid to the first processing volume **704**. A first rinse fluid source **720** may also be fluidly coupled to the first processing volume **704** via the conduit **714**. A valve **722** may be disposed on the conduit **714** between the inlet **749** and the first rinse fluid source **720** to control delivery of rinse fluid to the first processing volume **704**. The process fluid source **716** and the first rinse fluid source **720** may be similar to the

process fluid source **116** and the rinse fluid source **120**, respectively, which are described with regard to FIG. **1**.

A first drain **728** may be in fluid communication with the first processing volume **704** via the conduit **714**. A valve **730** may be disposed on the conduit **714** between the inlet **749** and the drain **728**. Given the vertical orientation of the chamber **700**, the drain **728** in fluid communication with the first processing volume **704** via the fluid inlet **749** may provide for improved efficiency when removing process fluid or rinse fluid from the first processing volume **704**. An exhaust **735** may also be in fluid communication with the first processing volume **704** via a conduit **731**. The conduit **731** may extend through the chamber body **702** and the fluid containment ring **712** to a fluid outlet **748** adjacent the first processing volume **704**. A valve **733** may be disposed on the conduit **731** between the outlet **748** and the exhaust **735**.

In operation, process fluid may be provided to the first processing volume **704** from the process fluid source **716** and an iFGPEB process may be performed. Any gaseous fluid in the first process volume **704** may rise toward the fluid outlet **748** as the first processing volume **704** is filled with a liquid process fluid. Accordingly, gaseous fluids may be removed from the first processing volume **704** by the exhaust **735**. Process fluid may be removed from the first processing volume **704** via the fluid inlet **749** and drain **728** after iFGPEB processing. Optionally, rinse fluids supplied to the first processing volume **704** via the first rinse fluid source **720** may be subsequently utilized with the substrate **710** in the processing position. Similar to the process fluids, the rinse fluids may be removed from the first processing volume **704** via the fluid inlet **749** and the drain **728**.

A second rinse fluid source **778** may be in fluid communication with the second processing volume **754** via a conduit **774**. The conduit **774** may extend from the second rinse fluid source **778** through the sidewalls **794** to an outlet **780**. A valve **776** may be dispose on the conduit **774** between the outlet **780** and the second rinse fluid source **778** to control delivery of rinse fluid to the second processing volume **754**. In one embodiment, after iFGPEB processing of the substrate **710** in the illustrated processing position, the door **706** may be moved away from the processing position along the X-axis such that the substrate **710** is positioned in a similar X-axis plane as the outlet **780** (i.e. a rinsing position). Once the substrate **710** is positioned in the rinsing position, rinse fluid from the second rinse fluid source **778** may be delivered to the second processing volume **754** and the substrate **710**. During and/or after rinsing, the substrate **710** may be spun by the motor **772** to expel rinse fluid and other fluids/particles from the substrate **710**.

A second drain **788** may also be in fluid communication with the second processing volume **754**. The second drain **788** may be fluidly coupled to the second processing volume **754** via a conduit **784** which extends from the second drain **788** through the sidewalls **794** to an inlet **790**. A valve **786** may be disposed on the conduit **784** between the inlet **790** and the second drain **788** to control removal of fluids/particles from the second processing volume **754**. In operation, rinse fluids from the second rinse fluid source **778** may rinse the substrate **710** and be removed from the second processing volume **754** via the second drain **788**.

A purge gas source **758** may also be in fluid communication with the second processing volume **754**. The purge gas source **758** may be fluidly coupled to the second processing volume **754** via a conduit **756** which extends from the purge gas source **758** through the sidewalls **794** to an outlet **782**. A valve **760** may be disposed on the conduit **756** between the outlet **782** and the purge gas source **758** to control delivery of purge gas to the second processing volume **754**. In operation, purge gas may be provided during iFGPEB processing and/or during rinsing of the substrate **710** to prevent particle accumulation within the processing volumes **704**, **754**. Purge gas from the purge gas source **758** may be removed from the processing volumes **704**, **754** via the exhaust **735**.

FIG. **8** schematically illustrates a cross-sectional view of an immersion field guided post exposure bake chamber **800** according to one embodiment described herein. The chamber **800** is similar to the chamber **700**, however, the chamber **800** is oriented in a horizontal position instead of a vertical position. A door **802**, which has the first electrode **708** coupled thereto, may be slidably coupled to a lift member **804**. The door **802** is illustrated in a processing position and may be move vertically along the Z-axis by the lift member **804** to a non-processing position away from the lid **796**. In the non-processing position, the door **802** may rotate about the X-axis 180° such that the first electrode **708** and the substrate **710** are disposed above the door **802** (i.e. loading position). In the loading position, the substrates may be positioned on and removed from the first electrode **708**. In operation, the substrate **710** may be secured on the first electrode **708** when the door **802** is in the loading position and the door may rotate 180°. The lift member **804** may lower the door **802** along the Z-axis to the illustrated processing position and iFGPEB processing may be performed.

FIG. **9** illustrates operations of a method **900** for performing an iFGPEB process. At operation **910**, a substrate may be positioned on a first electrode. The first electrode may be preheated prior to positioning of the substrate thereon. At operation **920**, process fluid may be introduced to a processing volume containing the substrate. The process fluid may also be preheated to processing temperatures prior to introduction in to the processing volume. A second electrode may be moved to a processing position at operation **930**. The positioning of the second electrode may be performed prior to, during, or after introduction of the process fluid in operation **920**.

At operation **940**, an electric field may be applied to the substrate via the first and/or second electrodes. In one embodiment, the field may be applied to the substrate for an amount of time between about 60 seconds and about 90 seconds. After application of the field, the process fluid may be drained and a rinse fluid may be introduced at operation **950**. The rinse fluid may be removed from the substrate by spinning the substrate and subsequently drained from the processing volume. A purge gas may be introduced into the processing volume during or after the rinsing and spinning. The purge gas may provide for improved particle reduction after utilization of the process fluid and the rinse fluid. The second electrode may also be returned to a non-processing position and the substrate may be removed from the processing chamber. After removal from the processing chamber, the substrate may be positioned on a cooling pedestal to cool the substrate to room temperature prior to subsequent processing.

While the foregoing is directed to embodiments of the present disclosure, other and further embodiments of the disclosure may be devised without departing from the basic scope thereof, and the scope thereof is determined by the claims that follow.

What is claimed is:

**1**. A substrate processing apparatus, comprising:

a chamber body defining a process volume;

a pedestal disposed in the process volume;

a first electrode adapted to support a substrate;

a ring disposed radially outward of the first electrode;

a bearing coupled to the chamber body and disposed opposite the first electrode;

a stem, rotatably coupled to the bearing, the stem rotatable about an axis parallel to the first electrode; and

a second electrode coupled to the stem.

**2**. The apparatus of claim **1**, wherein a fluid inlet is disposed in the pedestal.

**3**. The apparatus of claim **2**, wherein the fluid inlet is disposed radially outward of the first electrode.

**4**. The apparatus of claim **2**, wherein the fluid inlet is disposed radially inward of the ring.

**5**. The apparatus of claim **2**, wherein a first conduit extends from the fluid inlet through the pedestal and the chamber body.

**6**. The apparatus of claim **1**, wherein a fluid outlet is disposed in the pedestal.

**7**. The apparatus of claim **6**, wherein the fluid outlet is disposed radially outward of the first electrode.

**8**. The apparatus of claim **6**, wherein the fluid outlet is disposed radially inward of the ring.

**9**. The apparatus of claim **6**, wherein a second conduit extends from the fluid outlet through the pedestal and the chamber body.

**10**. The apparatus of claim **1**, further comprising:

a heat source coupled to the first electrode.

* * * * *