US011975422B2

(12) **United States Patent**
Ahamed et al.

(10) **Patent No.: US 11,975,422 B2**
(45) **Date of Patent: May 7, 2024**

(54) **MINIMAL CONTACT GRIPPING OF THIN OPTICAL DEVICES**

(71) Applicant: **Applied Materials, Inc.**, Santa Clara, CA (US)

(72) Inventors: **Yaseer Arafath Ahamed**, Austin, TX (US); **Kangkang Wang**, San Jose, CA (US); **Benjamin B. Riordon**, Newburyport, MA (US); **James D. Strassner**, Austin, TX (US); **Ludovic Godet**, Sunnyvale, CA (US)

(73) Assignee: **Applied Materials, Inc.**, Santa Clara, CA (US)

(*) Notice: Subject to any disclaimer, the term of this patent is extended or adjusted under 35 U.S.C. 154(b) by 0 days.

(21) Appl. No.: **18/061,327**

(22) Filed: **Dec. 2, 2022**

(65) **Prior Publication Data**

US 2023/0094653 A1 Mar. 30, 2023

Related U.S. Application Data

(62) Division of application No. 17/237,533, filed on Apr. 22, 2021, now Pat. No. 11,524,392.

(Continued)

(51) **Int. Cl.**

B25B 11/00	(2006.01)
G02B 1/00	(2006.01)
G02B 6/10	(2006.01)

(52) **U.S. Cl.**

CPC ***B25B 11/005*** (2013.01); *G02B 1/002* (2013.01); *G02B 6/10* (2013.01)

(58) **Field of Classification Search**

CPC B25B 11/00; B25B 11/005; B25B 11/007; B23Q 3/08; B23Q 3/088; H01L 21/6838; G02B 1/002; G02B 6/10

(Continued)

(56) **References Cited**

U.S. PATENT DOCUMENTS

6,152,507	A	11/2000	Pirker	
6,203,621	B1 *	3/2001	Tran	C23C 14/50 269/21

(Continued)

FOREIGN PATENT DOCUMENTS

CN	210307882	U	4/2020
JP	H06204324	A	7/1994

(Continued)

OTHER PUBLICATIONS

PCT Notification of Transmittal of the International Search Report and the Written Opinion of the International Searching Authority for International Application No. PCT/US2021/057574; dated Feb. 18, 2022.

Primary Examiner — Lee D Wilson
Assistant Examiner — Alberto Saenz
(74) *Attorney, Agent, or Firm* — Patterson + Sheridan, LLP

(57) **ABSTRACT**

Embodiments described herein provide for devices and methods for retaining optical devices. The devices and methods described herein provide for retention of the substrate without contacting sensitive portions of the substrate. The devices and methods utilize retention pads or vacuum pins to contact the exclusion zones i.e., inactive areas of the substrate to retain the substrate and prevent the substrate from moving laterally. Additionally, a holding force retains the substrate in the vertical direction, without contacting the substrate. The methods provide for adjusting the devices to account for multiple geometries of the substrate. The methods further provide for adjusting the devices, such as adjusting a gap between the optical device and a suction pad, to alter the holding force of the devices on the optical devices.

7 Claims, 6 Drawing Sheets

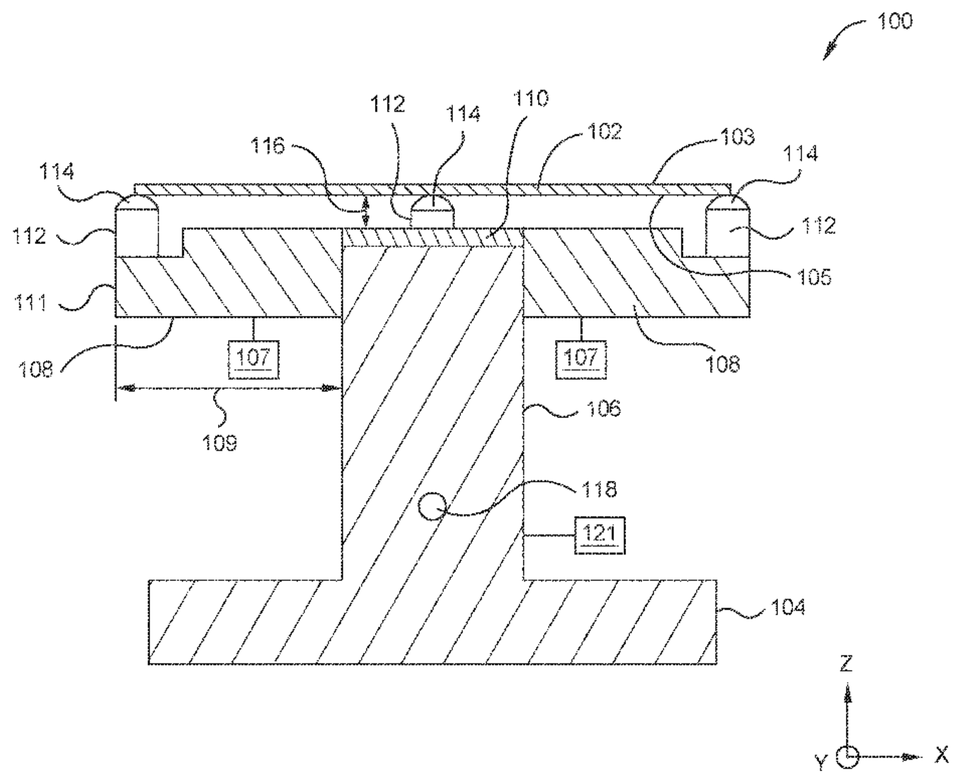

Related U.S. Application Data

(60) Provisional application No. 63/117,571, filed on Nov. 24, 2020.

(58) **Field of Classification Search**
USPC ..... 29/559; 269/20, 21, 289 R, 900, 903
See application file for complete search history.

(56) **References Cited**

U.S. PATENT DOCUMENTS

8,960,686	B2 *	2/2015	Ferguson	B23Q 3/088 269/21
10,559,488	B2 *	2/2020	Breingan	H01L 21/67034
10,811,299	B2 *	10/2020	LaBrie	H01L 21/68792
2017/0256436	A1	9/2017	Rashkovsky et al.	
2019/0148189	A1 *	5/2019	Huang	H01L 21/6838 29/739
2019/0247983	A1 *	8/2019	Borowicz	B65G 47/917
2019/0252235	A1	8/2019	Thirunavukarasu et al.	

FOREIGN PATENT DOCUMENTS

JP	2003128279	A	5/2003
JP	2003158169	A	5/2003
JP	2012000737	A	1/2012

* cited by examiner

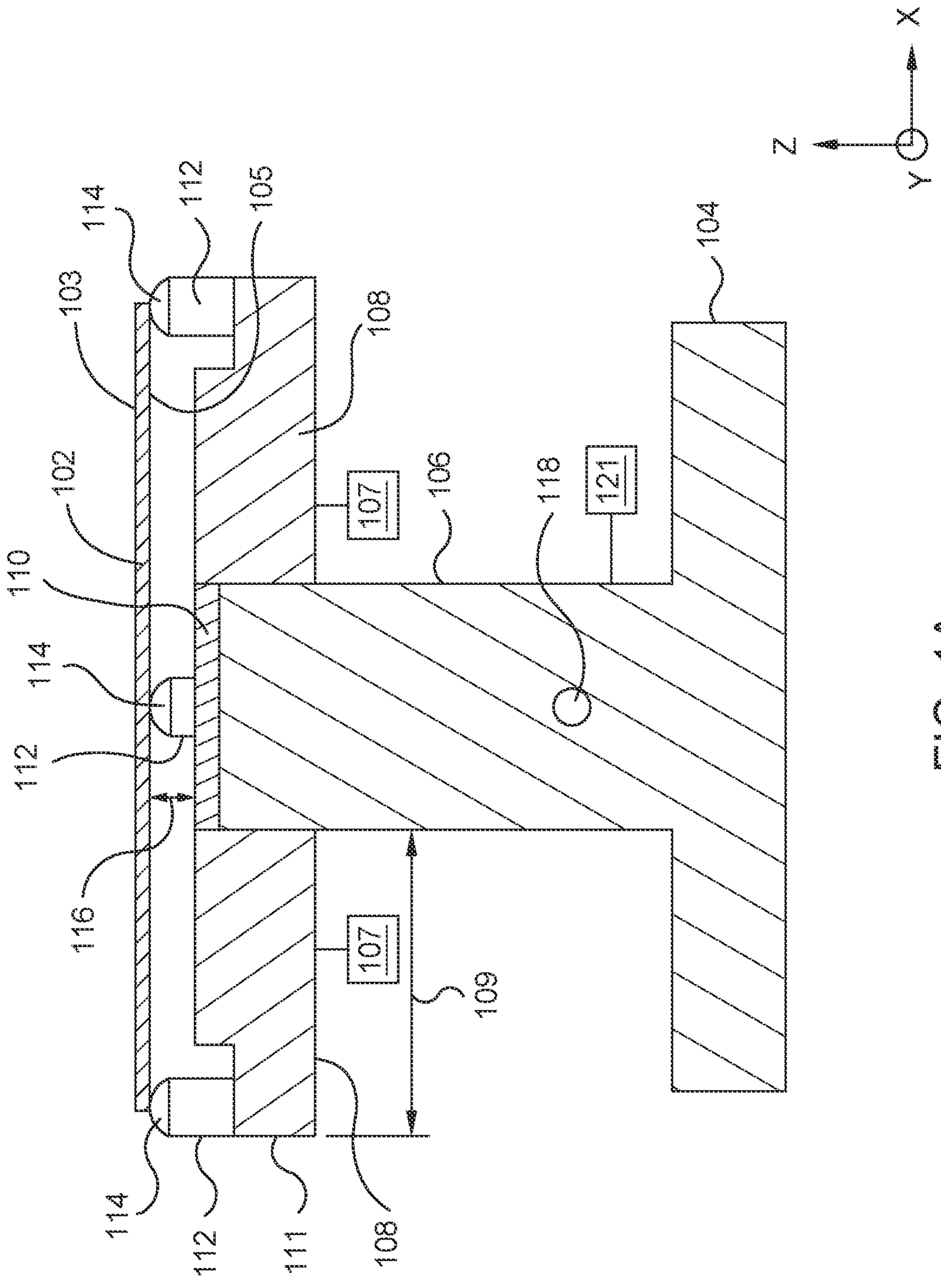
100
114
112
105
103
108
104
102
107
106
118
121
110
114
112
116
107
109
114
112
111
108
X
Z
Y

FIG. 1A

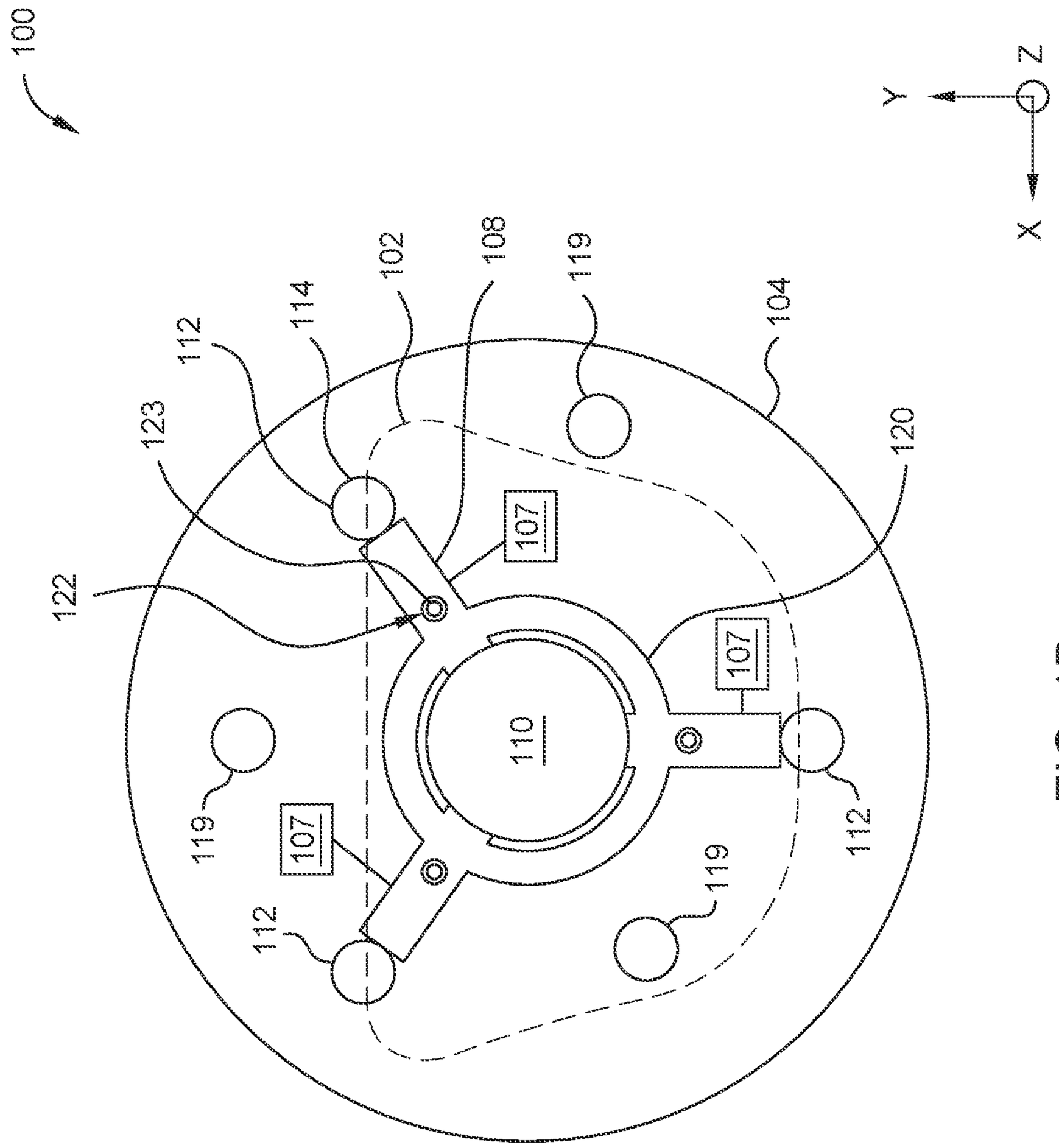
100
Z
Y
X
102
108
119
104
114
112
123
122
120
107
110
107
119
107
112
119
112

FIG. 1B

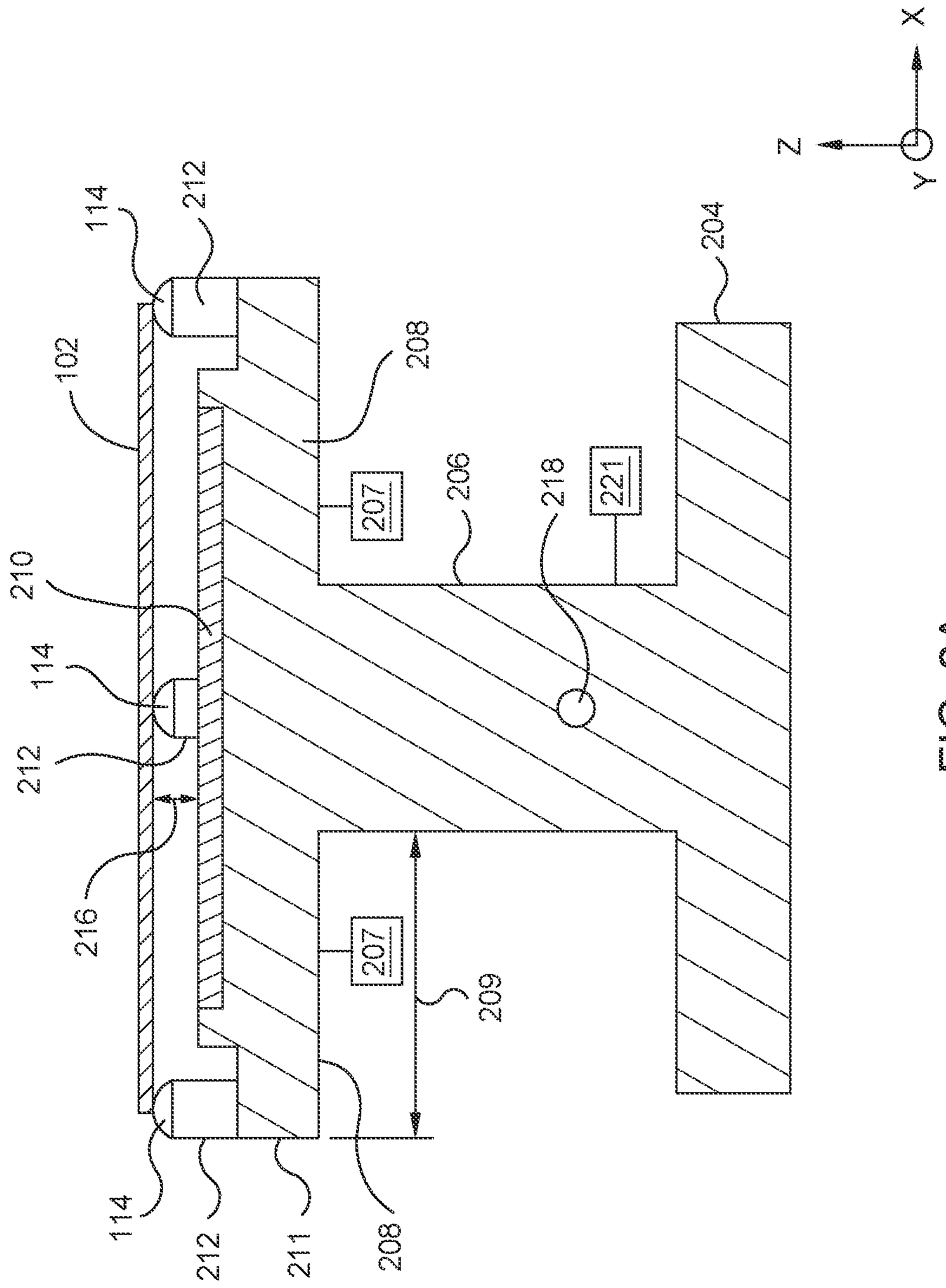

FIG. 2A

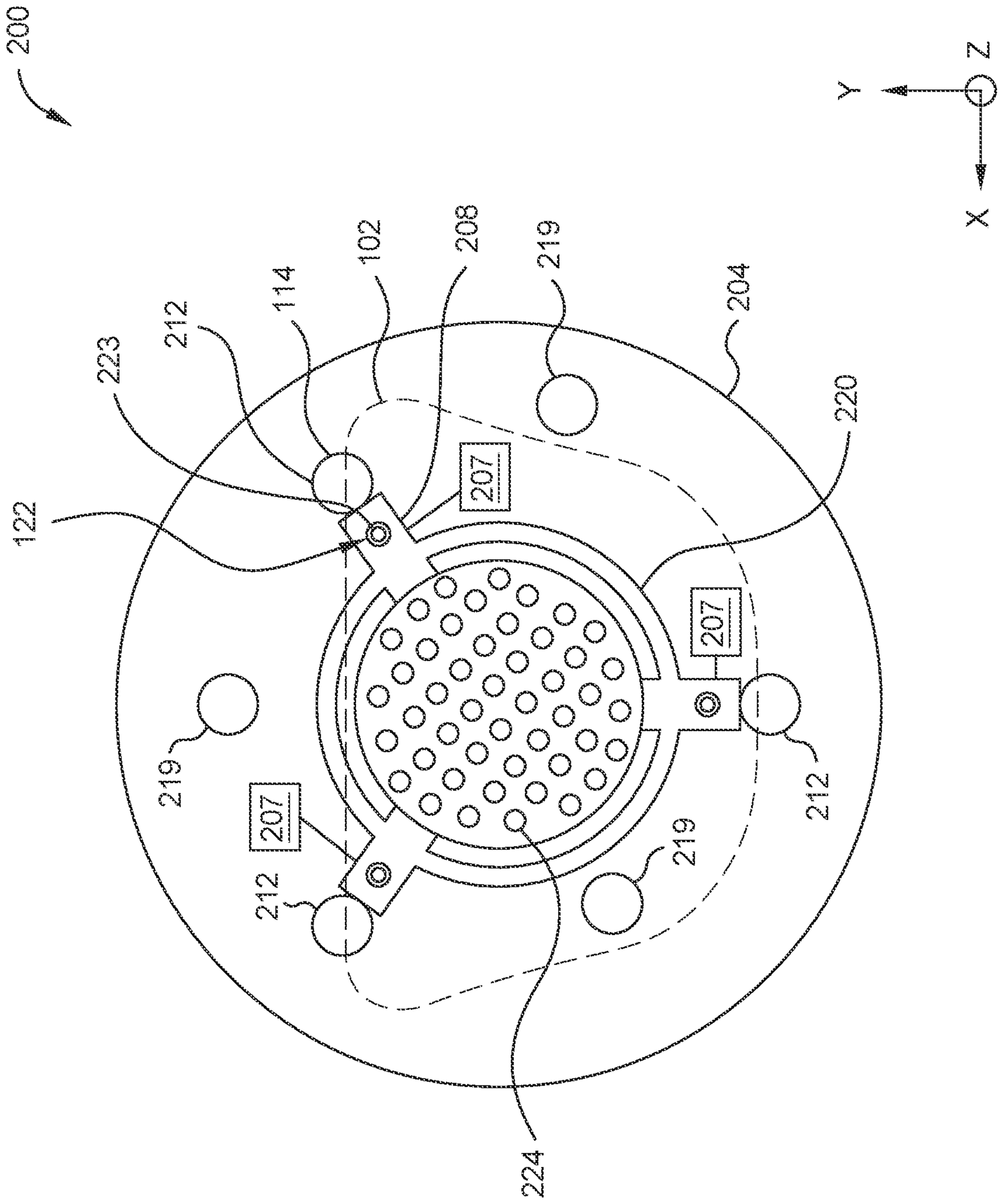

FIG. 2B

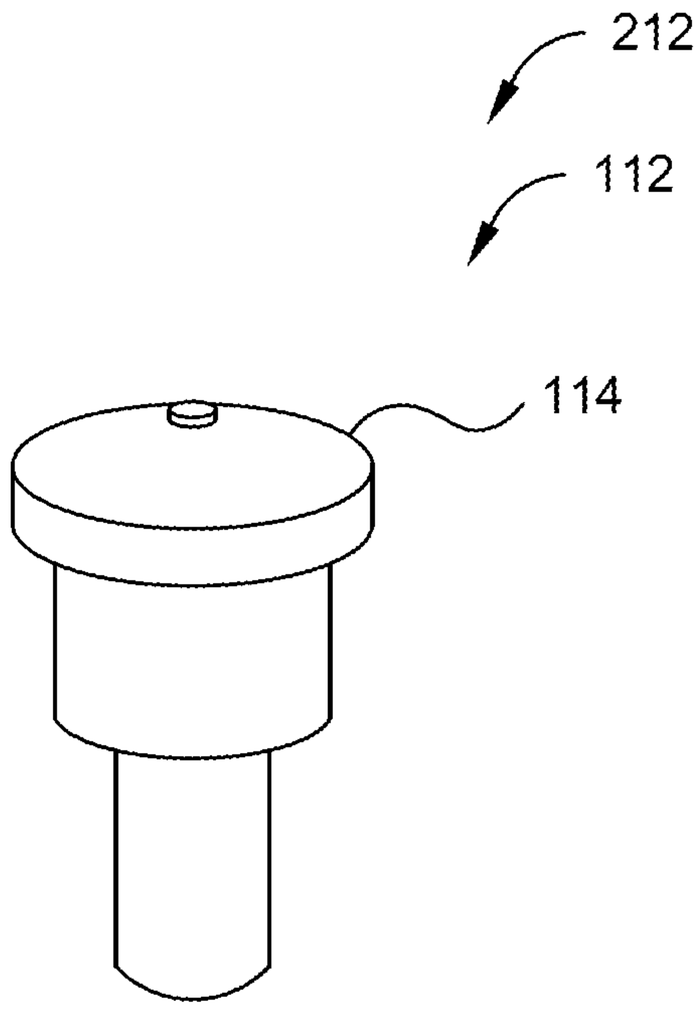

FIG. 3A

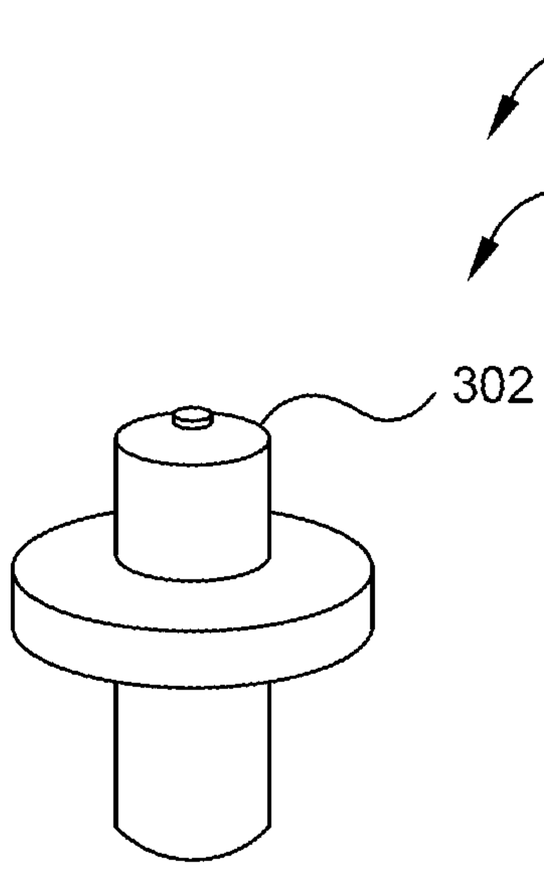

FIG. 3B

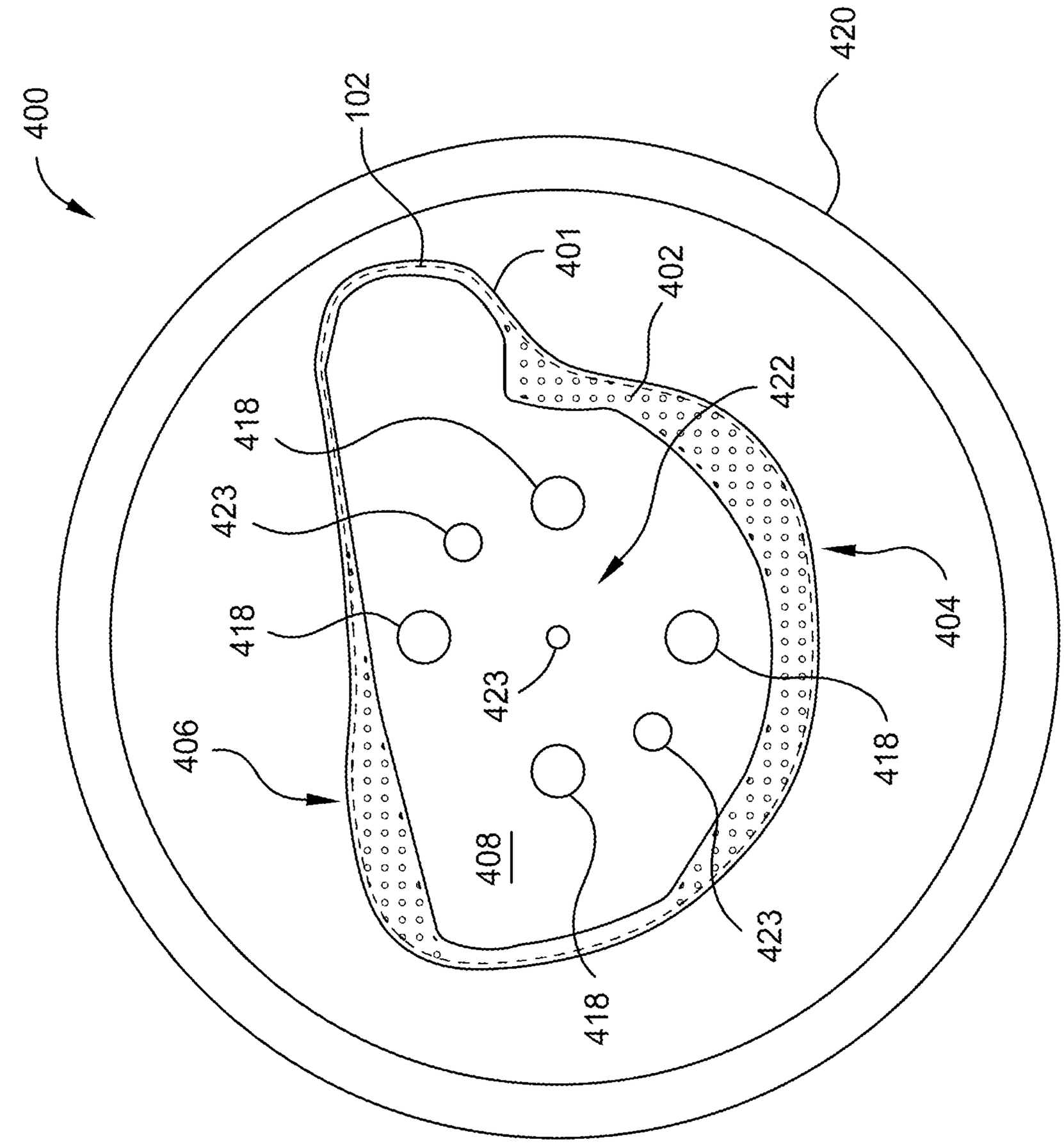

FIG. 4

MINIMAL CONTACT GRIPPING OF THIN OPTICAL DEVICES

CROSS-REFERENCE TO RELATED APPLICATIONS

This application is a divisional application of U.S. patent application Ser. No. 17/237,533, filed Apr. 22, 2021, which claims priority to and benefit of U.S. Application Ser. No. 63/117,571, filed Nov. 24, 2020, which is hereby incorporated by reference in its entirety.

BACKGROUND

Field

Embodiments of the present disclosure generally relate to optical devices. More specifically, embodiments described herein relate to devices and methods for retaining optical devices.

Description of the Related Art

Optical devices including waveguide combiners, such as augmented reality waveguide combiners, and flat optical devices, such as metasurfaces, are used to assist in overlaying images. Generated light is propagated through an optical device until the light exits the optical device and is overlaid on the ambient environment.

The optical devices generally include structures disposed on the optical devices. The optical devices and structures are formed from thin, brittle materials that may be damaged when exposed to external stresses or external contaminants. Additionally, some coatings applied over the structures are sensitive and may be damaged during handling. Thus, optical devices are susceptible to damage when transferring the optical devices between different processing tools. Retaining, e.g., gripping, the optical device without damaging, deflecting, or leaving marks and residue on the optical devices is difficult. Additionally, it is desirable to retain different contours of optical devices with a single device. Accordingly, what is needed in the art are devices and methods for retaining optical devices.

SUMMARY

In one embodiment a device is provided. The device includes a base plate. The base plate is coupled to a stem. The device further includes a suction pad disposed on the stem. The suction pad is operable to provide a holding force to a substrate to be retained. The device further includes a plurality of arms extending radially from the stem and the suction pad. The plurality of arms are coupled to a plurality of actuators. The actuators are operable to extend the plurality of arms in a lateral direction or a vertical direction. The device further includes a retention pad disposed on each of the plurality of arms.

In another embodiment, a device is provided. The device includes a base plate. The device further includes a ledge disposed along a perimeter of the device. The perimeter has a shape corresponding to a substrate to be retained on the ledge. The base plate is recessed from the ledge. The device further includes a plurality of vacuum pins disposed on the ledge. The plurality of vacuum pins are coupled to a vacuum source. The plurality of vacuum pins are operable to provide a vacuum force to the substrate disposed on the ledge when the substrate is retained.

In yet another embodiment, a method for retaining a substrate is provided. The method includes adjusting retention pads disposed on a plurality of arms of a retaining device. The retention pads define a retention area corresponding to a surface area of the substrate to be retained. The plurality of arms are disposed radially from a suction pad and the suction pad is operable to provide a holding force to the substrate. The method further includes adjusting a gap between the suction pad and the substrate to be retained. The method further includes activating the suction pad to provide the holding force to the substrate to be retained.

BRIEF DESCRIPTION OF THE DRAWINGS

So that the manner in which the above recited features of the present disclosure can be understood in detail, a more particular description of the disclosure, briefly summarized above, may be had by reference to embodiments, some of which are illustrated in the appended drawings. It is to be noted, however, that the appended drawings illustrate only exemplary embodiments and are therefore not to be considered limiting of its scope, and may admit to other equally effective embodiments.

FIG. **1**A is schematic, cross-sectional view of a retaining device according to embodiments.

FIG. **1**B is a schematic, top view of a retaining device according to embodiments.

FIG. **2**A is schematic, cross-sectional view of a retaining device according to embodiments.

FIG. **2**B is a schematic, top view of a retaining device according to embodiments.

FIG. **3**A is a schematic, perspective view of a retention pad according to embodiments.

FIG. **3**B is a schematic, perspective view of a retention pad according to embodiments.

FIG. **4** is a schematic, top-view of a retaining device according to embodiments.

To facilitate understanding, identical reference numerals have been used, where possible, to designate identical elements that are common to the figures. It is contemplated that elements and features of one embodiment may be beneficially incorporated in other embodiments without further recitation.

DETAILED DESCRIPTION

Embodiments of the present disclosure generally relate to optical devices. More specifically, embodiments described herein relate to devices and methods for retaining optical devices. In one embodiment, the device for retaining optical devices includes a base coupled to a stem. A suction pad disposed on the stem and the suction pad is operable to provide a holding force to a substrate to be retained by the device. A plurality of arms extending radially from the stem and the suction pad and the plurality of arms are coupled to a plurality of actuators operable to extend the plurality of arms in a lateral direction or a vertical direction. Retention pads are disposed on each of the plurality of arms.

In another embodiment, the device for retaining optical devices includes a base plate. The device further includes a ledge disposed along a perimeter of the device having a shape corresponding to a substrate to be retained on the ledge. The base plate is recessed from the ledge. A plurality of vacuum pins are disposed on the ledge and coupled to a vacuum source. The plurality of vacuum pins are operable to provide a vacuum force to the substrate disposed on the ledge when the substrate is retained.

FIG. **1**A is a schematic, cross-sectional view of a retaining device **100** according to embodiments described herein. The retaining device **100** is operable to retain a substrate **102**. The retaining device **100** is operable to transfer and handle the substrate **102**. Additionally, the retaining device **100** is operable to retain the substrate **102** during processing.

The substrate **102** can be any substrate used in the art, and can be either opaque or transparent depending on the use of the substrate. Additionally, substrate selection may further include varying shapes, thickness, and diameters of the substrate **102**. In one embodiment, which can be combined with other embodiments described herein, the substrate **102** includes, but is not limited to, a glass, silicon carbide, or combinations thereof. In another embodiment, which can be combined with other embodiments described herein, the substrate **102** is a waveguide combiner or a flat optical device, such as a metasurface. In yet another embodiment, which can be combined with other embodiments described herein, the substrate **102** may have optical device structures patterned on a first surface **103** or a second surface **105** of the substrate **102**.

The retaining device **100** includes a base plate **104**, a stem **106**, a suction pad **110**, a plurality of arms **108**, and retention pads **112**. In one embodiment, which can be combined with other embodiments described herein, the base plate **104** is coupled to a surface of a device, such as a transfer robot. In another embodiment, which can be combined with other embodiments described herein, the base plate **104** is configured to be a handle. For example, the base plate **104** may be configured as a handle for manual use of the retaining device **100**. The base plate **104** is coupled to a stem **106**. The stem **106** supports a plurality of arms **108**. The plurality of arms **108** are coupled to the stem **106** and are radially disposed around the stem **106**.

The plurality of arms **108** each include a retention pad **112**. The retention pads **112** are configured to retain the substrate **102**. In one embodiment, which can be combined with other embodiments described herein, the substrate **102** is an optical device lens having a surface area of between about 18 cm^2 and about 20 cm^2. The retaining device **100** has a retention area defined by the retention pads **112**. The retention area corresponds to the surface area of the optical device lens, such that the optical device lens is retained by the retaining device **100**.

The retention pads **112** utilize corner contact or contact on exclusion zones of the substrate **102** i.e., inactive zones of the substrate **102**. Therefore, sensitive portions of the substrate **102**, such as the optical device structures and coatings, are not damaged during transfer or during handling. As shown in FIGS. **3**A and **3**B, the retention pads **112** may be configured to include one of a contact pad **114** (shown in FIG. **1**A) or a vacuum pad **302**. Although only three retention pads **112** are shown in FIGS. **1**A and **1**B, any number of retention pads **112** may be utilized to retain the substrate **102**. Additionally, any number of the plurality of arms **108** may be utilized to support the retention pads **112**.

The stem **106** supports the suction pad **110**. The suction pad **110** provides suction to the substrate **102** without physically contacting the substrate **102**. In one embodiment, which can be combined with other embodiments described herein, the suction pad **110** may utilize Bernoulli's principle to create a holding force on the substrate **102**. While the force from the suction pad **110** retains the substrate **102** in a vertical direction i.e., the Z-direction, the retention pads **112** prevent the substrate **102** from lateral movement i.e., movement in the X-direction. The stem **106** may further include an inlet **118**. The inlet **118** provides air or removes air from the suction pad **110** from an external air source **121** or from an external vacuum source **121** to enable the production of a holding force. The suction pad **110** may be any device operable to provide a holding force to the substrate **102** without contacting the substrate **102**.

In one embodiment, which can be combined with other embodiments described herein, the plurality of arms **108** may include actuators **107**. Each arm **108** of the plurality of arms **108** may include an actuator **107**. The actuators **107** in the plurality of arms can adjust a radial distance **109**. The radial distance **109** is the length the plurality of arms **108** extends from the stem **106** i.e., the length from the stem **106** to an outer edge **111** of the plurality of arms **108**. The radial distance **109** of the plurality of arms **108** may be adjusted based on the geometry of the substrate **102**. Additionally, the radial distance **109** of the plurality of arms **108** may be adjusted based on the location of the exclusion zones on the substrate **102**. The actuators **107** may be micro-actuators. In another embodiment, which can be combined with other embodiments described herein, the plurality of arms **108** including the actuators **107** can be adjusted vertically i.e., the Z-direction. The actuators **107** in the plurality of arms **108** can adjust a gap **116**. The gap **116** is the length from the suction pad **110** to the second surface **105** of the substrate **102**. As the gap **116** decreases, the strength of the holding force on the substrate **102** increases. The gap **116** may be adjusted to ensure there is no deflection of the substrate **102**.

FIG. **1**B is a schematic, top view of the retaining device **100**. The retaining device **100** includes the base plate **104**, the stem **106**, the suction pad **110**, the plurality of arms **108**, and the retention pads **112**. In one embodiment, which can be combined with other embodiments described herein, the base plate **104** can be coupled to a surface via a plurality of through holes **119**. For example, the plurality of through holes **119** allow the retaining device **100** to be coupled to a device operable to transfer and handle the substrate **102**, such as a transfer robot.

In one embodiment, which can be combined with other embodiments described herein, the retaining device **100** includes a light source **120**. The light source **120** is coupled to the retaining device **100**. The light source **120** may provide light for additional processing of the substrate **102**. For example, the light source **120** may provide light for a curing process, such as by providing ultraviolet light to the substrate **102**. The light source **120** may be utilized to provide lighting to the surrounding environment of the retaining device **100**. In another embodiment, which can be combined with other embodiments described herein, the light source **120** is a ring light i.e., the light source **120** is a ring shape such that light is provided equally or substantially equally to the substrate **102**.

In one embodiment, which can be combined with other embodiments described herein, the retaining device **100** includes a visual system **122**. The visual system **122** includes a plurality of ports **123** disposed on the plurality of arms **108**. The plurality of ports **123** are operable to house one or more devices such as one or more cameras or sensors. The visual system **122** may include a controller coupled to the plurality of ports **123**. The controller may then facilitate operations of handling and transferring the substrate **102** utilizing the visual system **122**. The one or more cameras housed in the plurality of ports **123** are operable to assist in metrology processes and to improve the positional accuracy when positioning the retention pads **112** around the substrate **102**. The one or more sensors housed in the plurality of ports may be proximity sensors and are operable to communicate with the controller. For example, a sensor may communicate

to the controller when the substrate **102** is retained by the retaining device **100**. Although FIG. **1**B shows the visual system **122** with three of the plurality of ports **123**, one or more of the plurality of ports **123** may be utilized. Any number of devices such as the one or more cameras and sensors may be utilized with the retaining device **100**. Additionally, the plurality of ports **123** may be disposed on other portions of the retaining device **100**, and are not limited to being disposed on the plurality of arms **108**.

FIG. **2**A is a schematic, cross-sectional view of a retaining device **200** according to embodiments described herein. The retaining device **200** is operable to retain a substrate **102**. The retaining device **200** is operable to transfer and handle the substrate **102**. Additionally, the retaining device **200** is operable to retain the substrate **102** during processing.

The substrate **102** can be any substrate used in the art, and can be either opaque or transparent depending on the use of the substrate. Additionally, substrate selection may further include varying shapes, thickness, and diameters of the substrate **102**. In one embodiment, which can be combined with other embodiments described herein, the substrate **102** includes, but is not limited to, a glass, silicon carbide, or combinations thereof. In another embodiment, which can be combined with other embodiments described herein, the substrate **102** is a waveguide combiner or a flat optical device, such as a metasurface. In yet another embodiment, which can be combined with other embodiments described herein, the substrate **102** can have optical device structures patterned on a first surface **103** or a second surface **105**.

The retaining device **200** includes a base plate **204**, a stem **206**, a suction pad **210**, a plurality of arms **208**, and retention pads **212**. In one embodiment, which can be combined with other embodiments described herein, the base plate **204** is coupled to a surface of a device, such as a transfer robot. In another embodiment, which can be combined with other embodiments described herein, the base plate **204** is configured to be a handle. For example, the base plate **204** may be configured as a handle for manual use of the retaining device **200**. The base plate **204** is coupled to a stem **206**. The stem **206** supports a plurality of arms **208**. The plurality of arms **208** are coupled to the stem **206** and are radially disposed around the stem **206**.

The plurality of arms **208** each include a retention pad **212**. The retention pads **212** are configured to retain the substrate **102**. In one embodiment, which can be combined with other embodiments described herein, the substrate **102** is an optical device lens having a surface area of between about 18 cm^2 and about 20 cm^2. The retaining device **200** has a retention area defined by the retention pads **212**. The retention area corresponds to the surface area of the optical device lens, such that the optical device lens is retained by the retaining device **200**.

The retention pads **212** utilize corner contact or contact on exclusion zones of the substrate **102** i.e., inactive zones of the substrate **102**. Therefore, sensitive portions of the substrate **102**, such as the optical device structures and coatings, are not damaged during transfer or during handling. As shown in FIGS. **3**A and **3**B, the retention pads **212** may be configured to include one of a contact pad **114** (shown in FIG. **2**A) or a vacuum pad **302**. Although only three retention pads **212** are shown in FIGS. **2**A and **2**B, any number of retention pads **212** may be utilized to retain the substrate **102**. Additionally, any number of the plurality of arms **208** may be utilized to support the retention pads **212**.

The stem **106** supports the suction pad **210**. The suction pad **210** provides suction to the substrate **102** without physically contacting the substrate **102**. In one embodiment, which can be combined with other embodiments described herein, the suction pad **210** may utilize the Coanda effect to create a holding force on the substrate **102**. While the force from the suction pad **210** retains the substrate **102** in a vertical direction i.e., the Z-direction, the retention pads **212** prevent the substrate **102** from lateral movement i.e., movement in the X-direction. The stem **206** may further include an inlet **218**. The inlet **218** provides air or removes air from the suction pad **210** from an external air source **221** or from an external vacuum source **221** to enable the production of a holding force. The suction pad **210** may be any device operable to provide a holding force to the substrate **102** without contacting the substrate **102**.

In one embodiment, which can be combined with other embodiments described herein, the plurality of arms **208** may include actuators **207**. Each arm **208** of the plurality of arms **208** may include an actuator **207**. The actuators **207** in the plurality of arms can adjust a radial distance **209**. The radial distance **209** is the length the plurality of arms **208** extends from the stem **206** i.e., the length from the stem **206** to an outer edge **211** of the plurality of arms **208**. The radial distance **209** of the plurality of arms **208** may be adjusted based on the geometry of the substrate **102**. Additionally, the radial distance **209** of the plurality of arms **208** may be adjusted based on the location of the exclusion zones on the substrate **102**. The actuators **207** may be micro-actuators. In another embodiment, which can be combined with other embodiments described herein, the plurality of arms **108** including the actuators **207** can be adjusted vertically i.e., the Z-direction. The actuators **207** in the plurality of arms **208** can adjust a gap **216**. The gap **216** is the length from the suction pad **210** to the second surface **105** of the substrate **102**. As the gap **216** decreases, the strength of the holding force on the substrate **102** increases. The gap **216** may be adjusted to ensure there is no deflection of the substrate **102**.

FIG. **2**B is a schematic, top view of the retaining device **200**. The retaining device **200** includes the base plate **204**, the stem **206**, the suction pad **210**, the plurality of arms **208** and the retention pads **212**. In one embodiment, which can be combined with other embodiments described herein, the base plate **204** can be coupled to a surface via a plurality of through holes **219**. For example, the plurality of through holes **219** allow the retaining device **200** to be coupled to a device operable to transfer and handle the substrate **102**, such as a transfer robot.

The suction pad **210** includes a plurality of apertures **224**. The plurality of apertures are in communication with the inlet **218**. Therefore, air may be provided or removed via the plurality of apertures **224** to create a holding force on the substrate **102**. For example, the holding force on the substrate may be created with a vacuum force applied through the plurality of apertures **224**, such as by utilizing the Coanda effect.

In one embodiment, which can be combined with other embodiments described herein, the retaining device **200** includes a light source **220**. The light source **220** is coupled to the retaining device **100**. The light source **220** may provide light for additional processing of the substrate **102**. For example, the light source **220** may provide light for a curing process, such as by providing an ultraviolet light beam to the substrate **102**. The light source **220** may be utilized to provide lighting to the surrounding environment of the retaining device **200**. In another embodiment, which can be combined with other embodiments described herein, the light source **220** is a ring light i.e., the light source **220** is a ring shape such that light is provided equally or substantially equally to the substrate **102**.

In one embodiment, which can be combined with other embodiments described herein, the retaining device **200** includes a visual system **222**. The visual system **222** includes a plurality of ports **223** disposed on the plurality of arms **208**. The plurality of ports **223** are operable to house one or more devices such as one or more cameras or sensors. The visual system **222** may include a controller coupled to the plurality of ports **223**. The controller may then facilitate operations of handling and transferring the substrate **102** utilizing the visual system **222**. The one or more cameras housed in the plurality of ports **223** are operable to assist in metrology processes and to improve the positional accuracy when positioning the retention pads **212** around the substrate **102**. The one or more sensors housed in the plurality of ports may be proximity sensors and are operable to communicate with the controller. For example, a sensor may communicate to the controller when the substrate **102** is retained by the retaining device **100**. Although, FIG. **2**B shows the visual system **222** with three of the plurality of ports **223**, one or more of the plurality of ports **223** may be utilized. Any number of devices such as the one or more cameras and sensors may be utilized with the retaining device **200**. Additionally, the plurality of ports **223** may be disposed on other portions of the retaining device **200**, and are not limited to being disposed on the plurality of arms **208**.

FIG. **3**A is a schematic, perspective view of a retention pad **112**, **212**. The retention pad **112**, **212** is operable to be utilized in the retaining device **100** or the retaining device **200** to contact a substrate **102**. The retention pad **112**, **212** is disposed on one of the plurality of arms **108**, **208**. The retention pad **112**, **212** contacts the substrate **102** on an exclusion zone or inactive areas of the substrate **102**.

In one embodiment, which can be combined with other embodiments described herein, the retention pad **112**, **212** is configured to include a contact pad **114**. The contact pad **114** provides friction and prevents lateral movement of the substrate **102**. In one embodiment, which can be combined with other embodiments described herein, the contact pad **114** is a low contact friction pad located under the handling zone of the substrate **102**. The contact pad **114** provides a vacuum force to the substrate **102** on the exclusion zones such that there is minimal damage to the active areas of the substrate **102**. The contact pad **114** includes, but is not limited to, polymer materials such as a carbon filled polyetheretherketone (PEEK) material or an unfilled PEEK material.

FIG. **3**B is a schematic, perspective view of a retention pad **112**, **212**. The retention pad **112**, **212** is operable to be utilized in the retaining device **100** or the retaining device **200** to contact a substrate **102**. The retention pad **112**, **212** contacts the substrate **102** on an exclusion zone or inactive areas of the substrate **102**.

In one embodiment, which can be combined with other embodiments described herein, the retention pad **112**, **212** is configured to include a vacuum pad **302**. The vacuum pad **302** may be utilized in place of the contact pad **114** (shown in FIGS. **1**A, **1**B, **2**A, and **2**B). The vacuum pad provides a vacuum force on the substrate **102**. The vacuum pad **302** may be in communication with the inlet **118**, **218**. In another embodiment, which can be combined with other embodiments described herein, the vacuum pad has a diameter of about 1 mm. The vacuum pad **302** provides a vacuum force to the substrate **102** on the exclusion zones such that there is minimal damage to the active areas of the substrate **102**.

FIG. **4** is a schematic, top-view of a retaining device **400** according to embodiments described herein. The retaining device **400** is operable to retain a substrate **102**. The retaining device **400** is operable to transfer and handle the substrate **102**. Additionally, the retaining device **400** is operable to retain the substrate **102** during processing, such as in back end processing.

The retaining device **400** includes a ledge **402**. The ledge **402** is disposed along a perimeter **401** of the retaining device **400**. In one embodiment, which can be combined with other embodiments described herein, the ledge **402** is about 0.5 mm to about 1 mm wide. In one embodiment, which can be combined with other embodiments described herein, the substrate **102** is an optical device lens having a surface area of between about 18 cm^2 and about 20 cm^2. The retaining device **400** has a retention area defined by the perimeter **401**. The retention area corresponds to the surface area of the optical device lens, such that the optical device lens is retained by the retaining device **400**. The ledge **402** is operable to prevent lateral movement of the substrate **102**. The substrate **102** sits on the ledge **402** such that the ledge **402** only contacts the exclusion zones of the substrate **102**. The substrate **102** sits on the ledge **402** such that it is sufficiently flat. The retaining device **400** may have a matte finish on the ledge **402**. The ledge **402** has a surface texture of about 1.6 μm to about 3.2 μm.

The ledge further includes vacuum zones **404**. The vacuum zones **404** correspond to the exclusion zones of the substrate **102**. The vacuum zones **404** further include a plurality of vacuum pins **406**. The plurality of vacuum pins **406** may be machined. The plurality of vacuum pins **406** support the substrate **102** when placed on the ledge **402**. The plurality of vacuum pins **406** are able to provide a vacuum force to the substrate **102**. For example, the plurality of vacuum pins **406** are in communication with a vacuum source. Thus, the plurality of vacuum pins **406** provide a vacuum force to the substrate **102** to retain the substrate **102** on the ledge **402**. In one embodiment, which can be combined with other embodiments described herein, the plurality of vacuum pins **406** have an encapsulation coating disposed thereover. The encapsulation coating protects the substrate **102** when contacting the plurality of vacuum pins **406**. The encapsulation coating includes, but is not limited to, a polymide material, or other thermoset materials.

The retaining device **400** further includes a base plate **408**. The base plate is recessed from the ledge **402**. The base plate **408** is recessed such that sensitive portions of the substrate **102**, such as the optical device structures and coatings, are not damaged during transfer or during handling by contacting the base plate **408**. In one embodiment, which can be combined with other embodiments described herein, the base plate **408** can be coupled to a surface via a plurality of through holes **418**. For example, the plurality of through holes **418** allow the retaining device **400** to be coupled to a device operable to transfer and handle the substrate **102**, such as a transfer robot.

In one embodiment, which can be combined with other embodiments described herein, the retaining device **400** includes a light source **420**. The light source **420** is coupled to the retaining device **400**. The light source **420** may provide light for additional processing of the substrate **102**. For example, the light source **420** may provide light for a curing process, such as by providing an ultraviolet light beam to the substrate **102**. The light source **420** may be utilized to provide lighting to the surrounding environment of the retaining device **400**. In another embodiment, which can be combined with other embodiments described herein, the light source **420** is a ring light i.e., the light source **420** is a ring shape such that light is provided equally or substantially equally to the substrate **102**.

In one embodiment, which can be combined with other embodiments described herein, the retaining device **400** includes a visual system **422**. The visual system **422** includes a plurality of ports **423** disposed on the base plate **408**. The plurality of ports **423** are operable to house one or more devices such as one or more cameras or sensors. The visual system **422** may include a controller coupled to the plurality of ports **423**. The controller may then facilitate operations of handling and transferring the substrate **102** utilizing the visual system **422**. The one or more cameras housed in the plurality of ports **423** are operable to assist in metrology processes and to improve the positional accuracy when positioning the plurality of vacuum pins **406** on the substrate **102**. The one or more sensors housed in the plurality of ports may be proximity sensors and are operable to communicate with the controller. For example, a sensor may communicate to the controller when the substrate **102** is retained by the retaining device **400**. Although FIG. **4** shows the visual system **422** with three of the plurality of ports **423**, one or more of the plurality of ports **423** may be utilized. Any number of devices such as the one or more cameras and sensors may be utilized with the retaining device **400**. Additionally, the plurality of ports **423** may be disposed on other portions of the retaining device **400**, and are not limited to being disposed on the base plate **408**.

A method for retaining e.g., gripping, the substrate **102** with the retaining device **100** or **200** is described herein. At a first operation, a plurality of arms **108**, **208** are adjusted depending on the geometry of the substrate **102**. The plurality of arms **108**, **208** are adjusted such that retention pads **112**, **212** disposed on the plurality of arms **108**, **208** contact corners or exclusion zones of a substrate **102**. The retention pads **112**, **212** define a retention area of the retaining device **100**, **200**. The retention area corresponds to a surface area of the substrate **102** to be retained. Adjusting the plurality of arms **108**, **208** includes changing a radial distance **109**, **209**. At a second operation, a gap **116**, **216** is adjusted. The gap **116**, **216** is the length from the suction pad **110** to the second surface **105** of the substrate **102**. The gap **116**, **216** is adjusted to increase or decrease the holding force to be placed on a substrate **102** by a suction pad **110**, **210**. At a third operation, the substrate **102** is retained by the retaining device **100**, **200**. The substrate **102** is in contact with the retention pads **112**, **212**. Upon activation, the suction pad **110**, **210** provides a holding force to the substrate **102**. In one embodiment, which can be combined with other embodiments described herein, a light source **120**, **220** and a visual system **122**, **222** are utilized during the method to perform processes such as metrology, ultraviolet curing of the substrate **102**, or improving the positional accuracy of retaining the substrate **102**.

A method for retaining e.g., gripping, the substrate **102** with the retaining device **400** is described herein. At a first operation, a substrate **102** is placed on a ledge **402** of the retaining device **400**. The ledge **402** is disposed along a perimeter **401** of the retaining device **400**. The retaining device **400** has a retention area defined by the perimeter **401**. The retention area corresponds to the surface area of the substrate **102** to be retained. A base plate **408** is recessed from the ledge **402** such that the substrate **102** is only contacted on exclusion zones. At a second operation, a plurality of vacuum pins **406** are activated. The plurality of vacuum pins **406** provide a holding force to the substrate **102** to retain the substrate **102** on the retaining device **400**. In one embodiment, which can be combined with other embodiments described herein, a light source **420** and a visual system **422** are utilized during the method to perform processes such as metrology, ultraviolet curing of the substrate **102**, or improving the positional accuracy of retaining the substrate **102**.

In summation, devices and methods for retaining optical devices are shown and described herein. Retaining devices and methods for retaining the optical devices described herein provide for retention of the substrate without contacting sensitive portions of the substrate. For example, the optical device structures and coatings on the substrate are not damaged during transfer or during handling. Additionally, the retaining devices prevent deflection of the substrate. The retaining devices and methods of retaining the optical devices utilize corner contact or contact on the exclusion zones i.e., inactive areas of the substrate to retain the substrate and prevent the substrate from moving laterally. Additionally, a holding force retains the substrate in the vertical direction, without contacting the substrate. The retaining device described herein may be adjustable to account for multiple geometries of the substrate, therefore improving tool throughout and reducing errors when handling the substrates.

While the foregoing is directed to examples of the present disclosure, other and further examples of the disclosure may be devised without departing from the basic scope thereof, and the scope thereof is determined by the claims that follow.

What is claimed is:

1. A device, comprising:

a base plate, the base plate coupled to a stem;

a suction pad disposed on the stem, the suction pad operable to provide a holding force to a substrate to be retained;

a plurality of arms extending radially from the stem and the suction pad, the plurality of arms coupled to a plurality of actuators, the plurality of actuators operable to move each of the plurality of arms independently in a lateral direction and independently in a vertical direction; and

a retention pad disposed on a distal end of each of the plurality of arms such that each of the retention pads are operable to move independently in the vertical direction.

2. The device of claim **1**, wherein a visual system is coupled to the plurality of arms, the visual system including one or more cameras coupled to a controller.

3. The device of claim **1**, wherein a visual system is coupled to the plurality of arms, the visual system including one or more sensors coupled to a controller.

4. The device of claim **1**, further comprising an inlet, the inlet coupled to the stem, the inlet in communication with an air source and the suction pad.

5. The device of claim **4**, wherein the suction pad includes a plurality of apertures in communication with the air source via the inlet, the plurality of apertures disposed through the suction pad.

6. The device of claim **1**, wherein a light source is coupled to the plurality of arms, wherein the light source forms a ring shape around the stem.

7. The device of claim **1**, wherein the retention pad is configured to include a vacuum pad, the vacuum pad operable to provide a vacuum force to an inactive portion of the substrate when the substrate is retained.

* * * * *