US012013566B2

(12) **United States Patent**
Colak et al.

(10) **Patent No.: US 12,013,566 B2**
(45) **Date of Patent: Jun. 18, 2024**

(54) **METHOD FOR MANUFACTURING OPTICAL DEVICE STRUCTURES**

(71) Applicant: **Applied Materials, Inc.**, Santa Clara, CA (US)

(72) Inventors: **Levent Colak**, Santa Clara, CA (US); **Ludovic Godet**, Sunnyvale, CA (US); **Andre P. Labonte**, Mechanicville, NY (US)

(73) Assignee: **Applied Materials, Inc.**

(*) Notice: Subject to any disclaimer, the term of this patent is extended or adjusted under 35 U.S.C. 154(b) by 0 days.

(21) Appl. No.: **17/958,504**

(22) Filed: **Oct. 3, 2022**

(65) **Prior Publication Data**

US 2023/0021915 A1 Jan. 26, 2023

Related U.S. Application Data

(63) Continuation of application No. 16/993,067, filed on Aug. 13, 2020, now Pat. No. 11,487,058.

(51) **Int. Cl.**
F21V 8/00 (2006.01)

(52) **U.S. Cl.**
CPC ***G02B 6/0065*** (2013.01); ***G02B 6/0016*** (2013.01); ***G02B 6/0038*** (2013.01)

(58) **Field of Classification Search**
CPC G02B 5/1876; G02B 5/1857; G02B 27/0037; G02B 27/4211; G02B 5/188; G02B 1/10; G02B 26/0808; G02B 27/4216; G02B 27/0075; G02B 5/1809; F21V 8/00
See application file for complete search history.

(56) **References Cited**

U.S. PATENT DOCUMENTS

4,936,665	A *	6/1990	Whitney	G02B 27/0075 359/741
5,119,231	A *	6/1992	Nelson	G02B 5/1814 359/359
5,543,966	A *	8/1996	Meyers	G02B 5/1895 359/569
6,327,086	B1	12/2001	Unno	
2001/0026399	A1	10/2001	Nakabayashi et al.	
2013/0193106	A1	8/2013	Chen et al.	
2014/0285891	A1	9/2014	Heitzmann	
2020/0135482	A1	4/2020	Godet et al.	

OTHER PUBLICATIONS

International Search Report issued to PCT/US2021/043381 dated Nov. 19, 2021.

* cited by examiner

Primary Examiner — William J Carter
(74) *Attorney, Agent, or Firm* — Patterson + Sheridan, LP

(57) **ABSTRACT**

Embodiments described herein provide for methods of forming optical device structures. The methods utilize rotation of a substrate, to have the optical device structures formed thereon, and tunability of etch rates of a patterned resist disposed over the substrate and one of a device layer or the substrate to form the optical device structures without multiple lithographic patterning steps and angled etch steps.

20 Claims, 8 Drawing Sheets

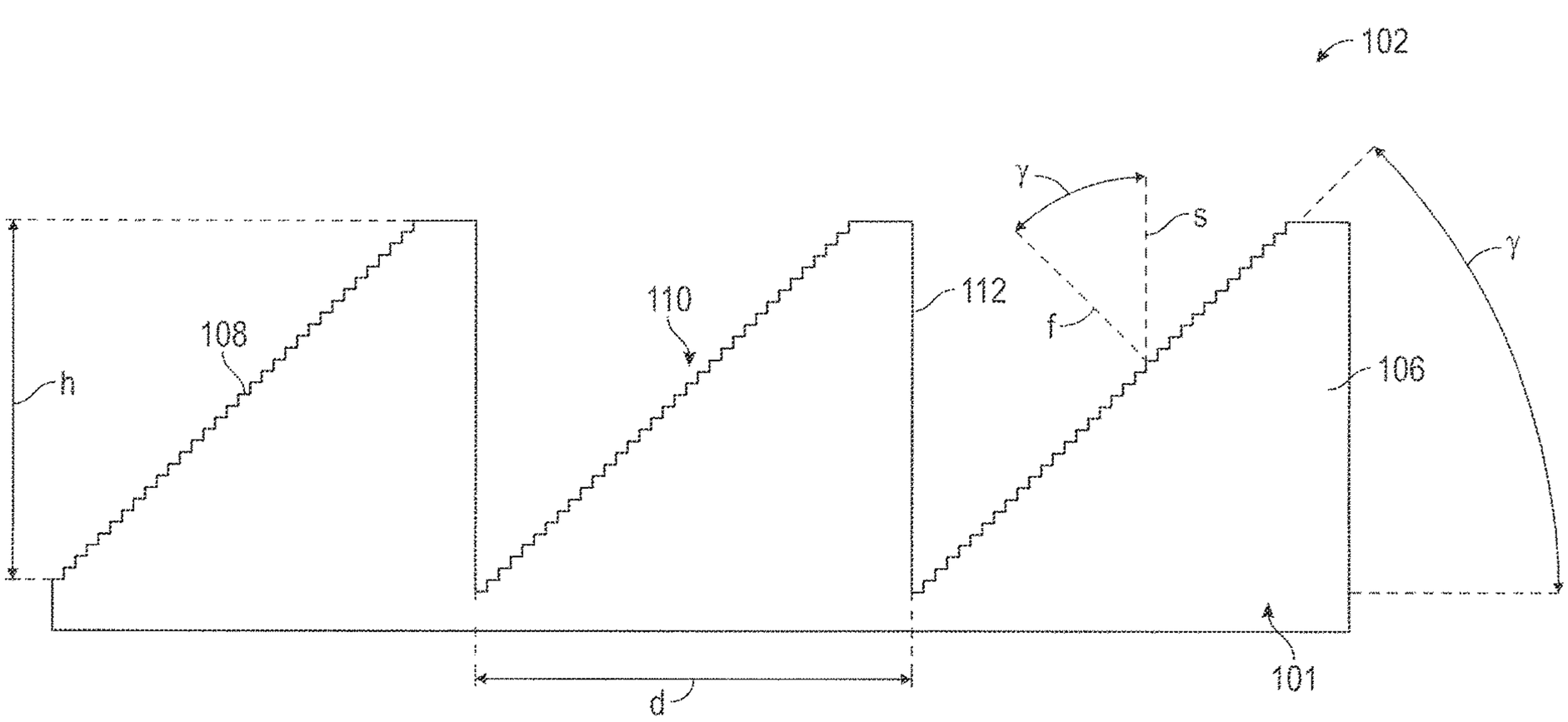

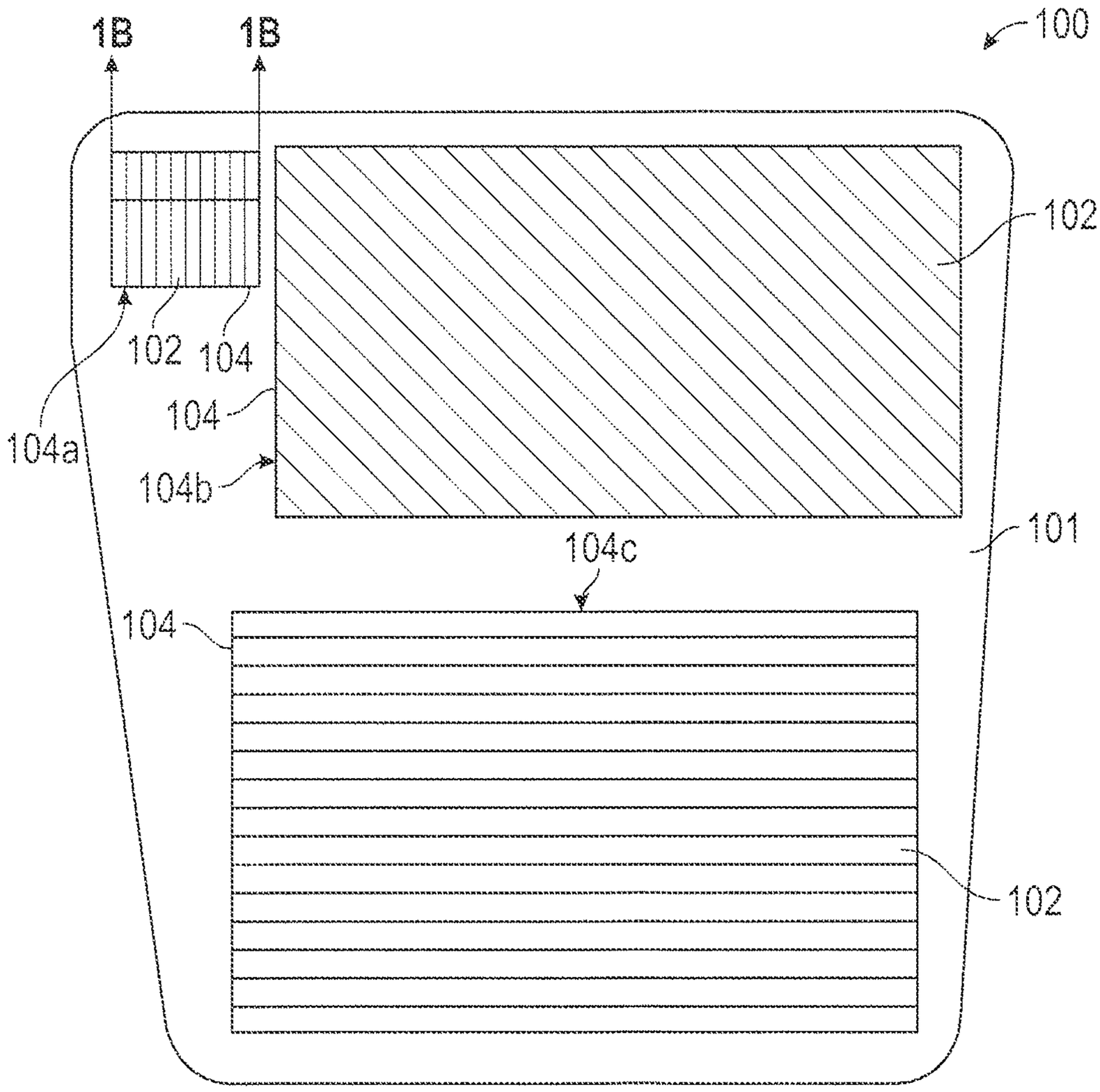

FIG. 1A

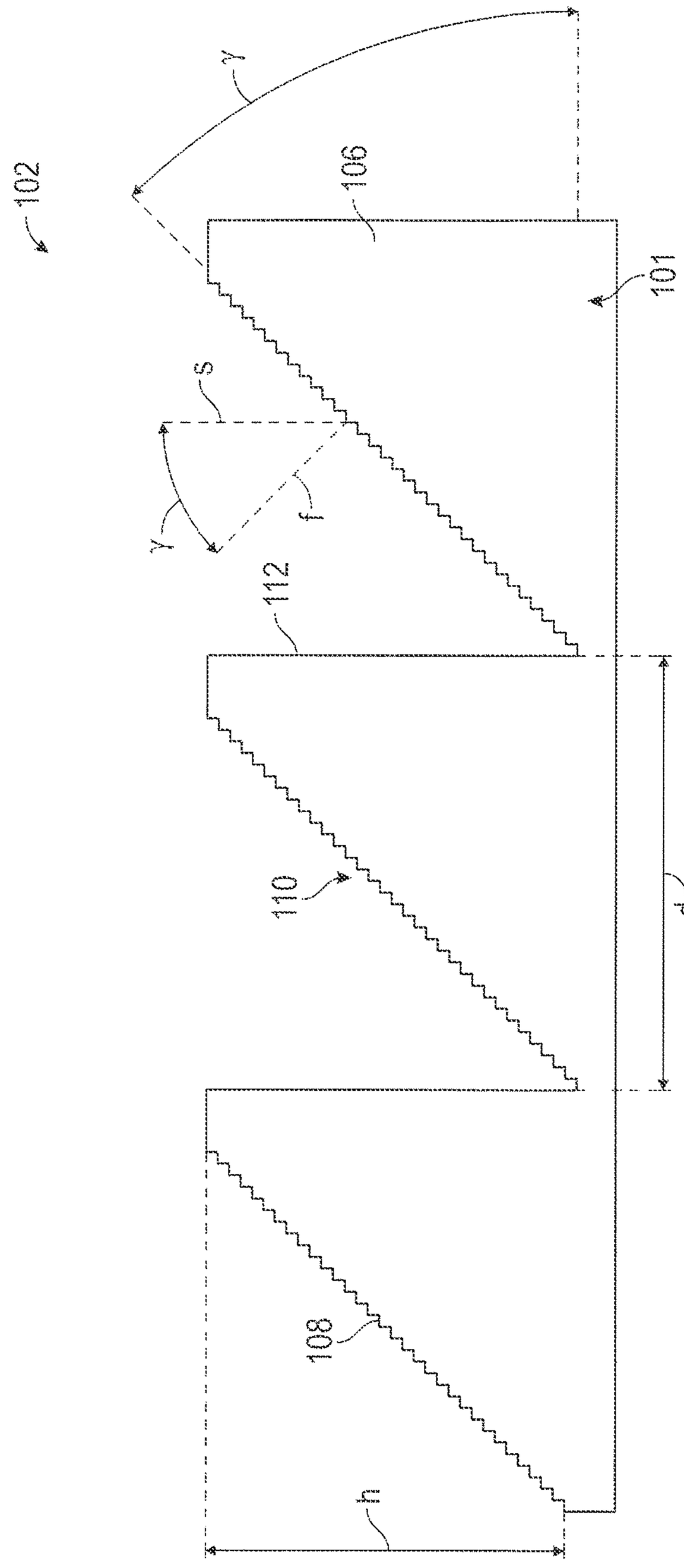

FIG. 1B

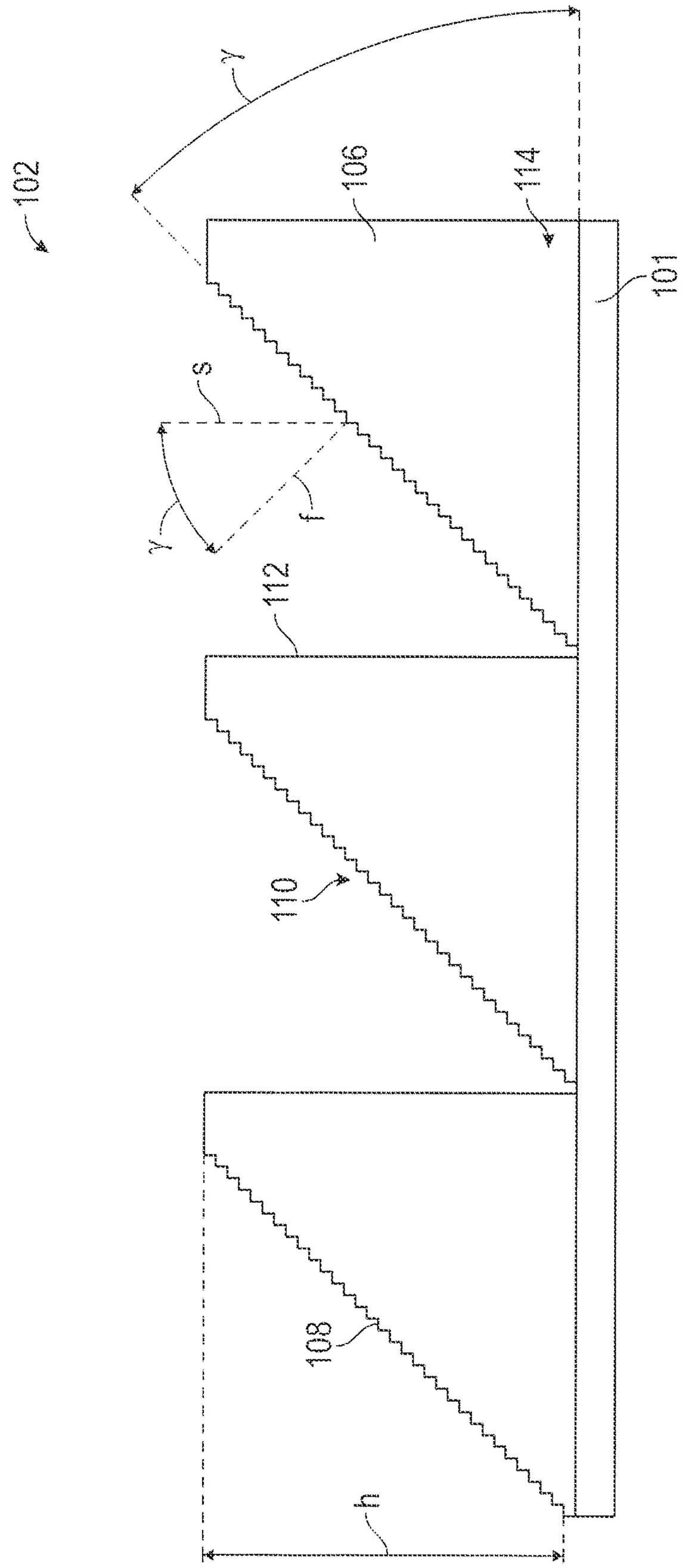

FIG. 1C

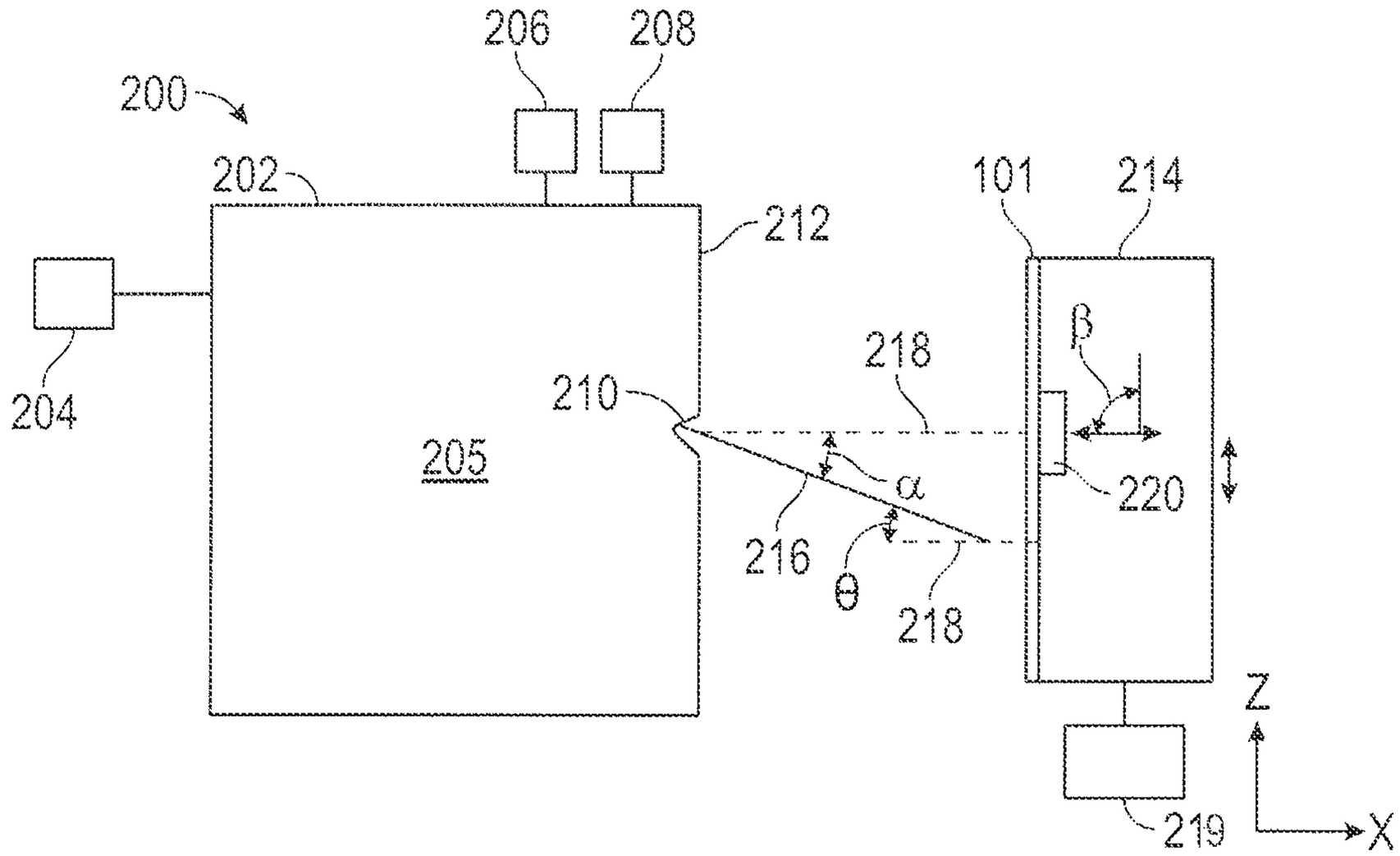
206
208
200
202
212
101
214
204
218
β
210
205
α
220
216
θ
218
Z
219
X

FIG. 2

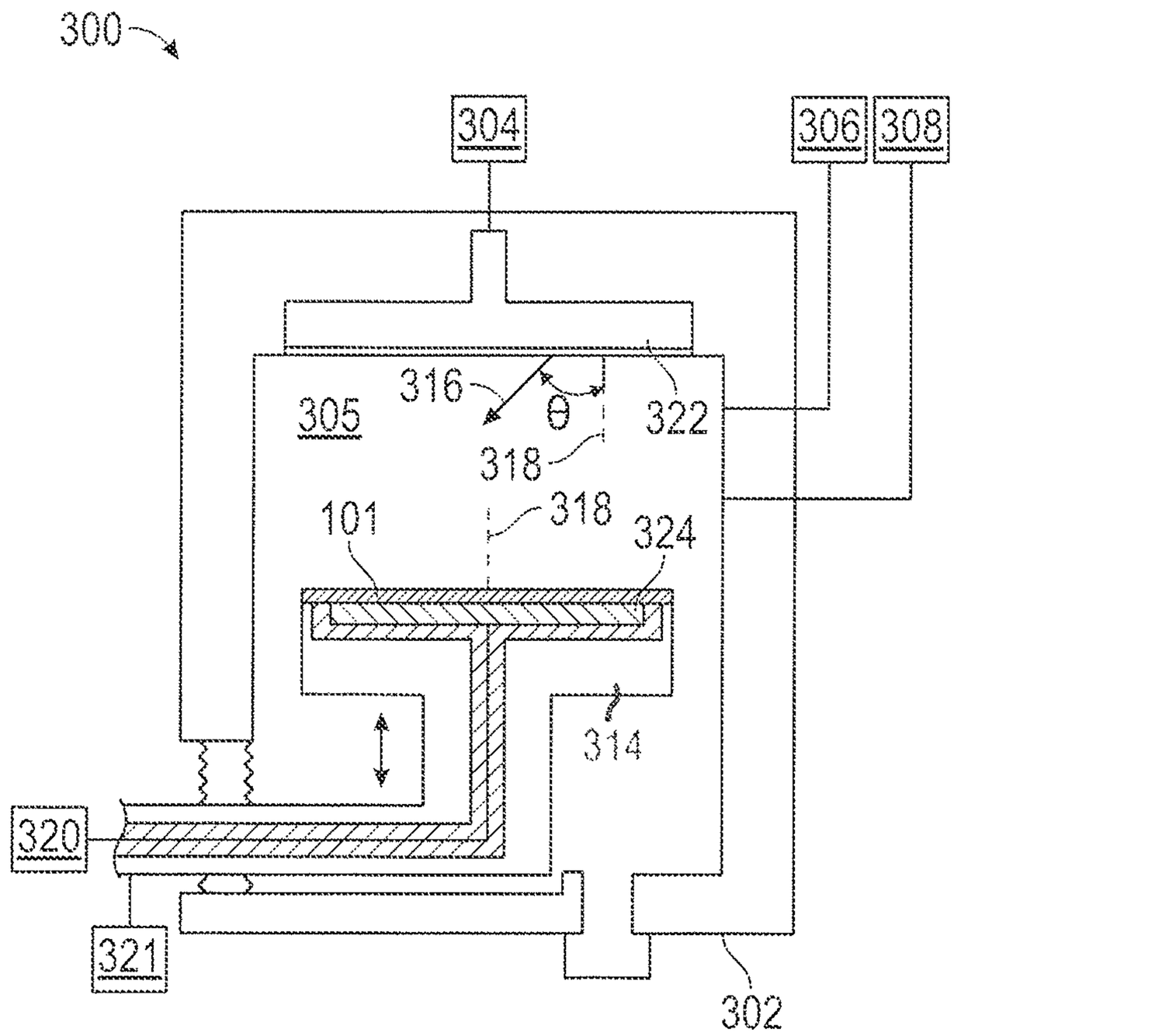
300
304
306
308
316
θ
305
322
318
318
101
324
314
320
321
302

FIG. 3

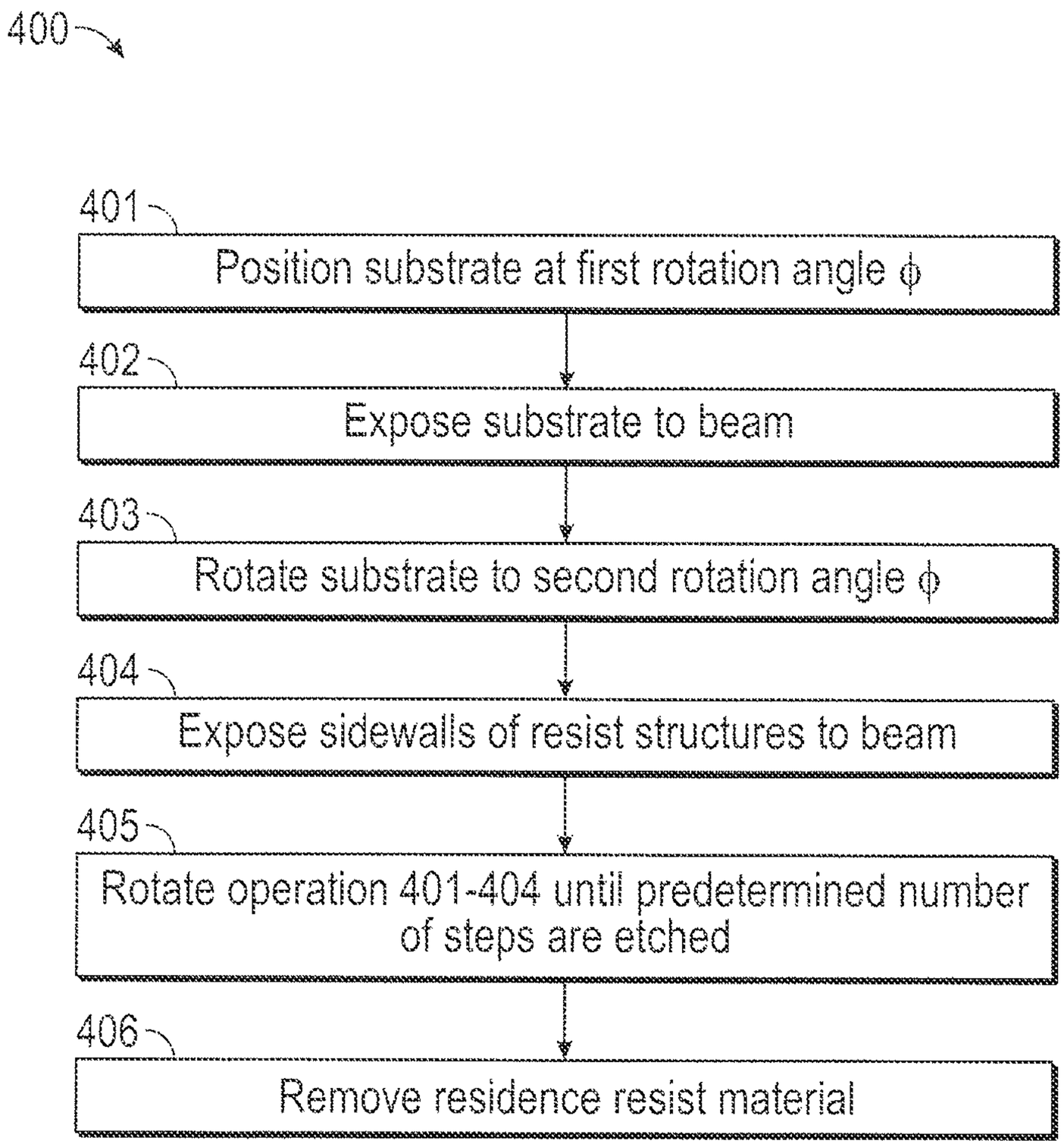
400
401
Position substrate at first rotation angle ϕ
402
Expose substrate to beam
403
Rotate substrate to second rotation angle ϕ
404
Expose sidewalls of resist structures to beam
405
Rotate operation 401-404 until predetermined number of steps are etched
406
Remove residence resist material

FIG. 4

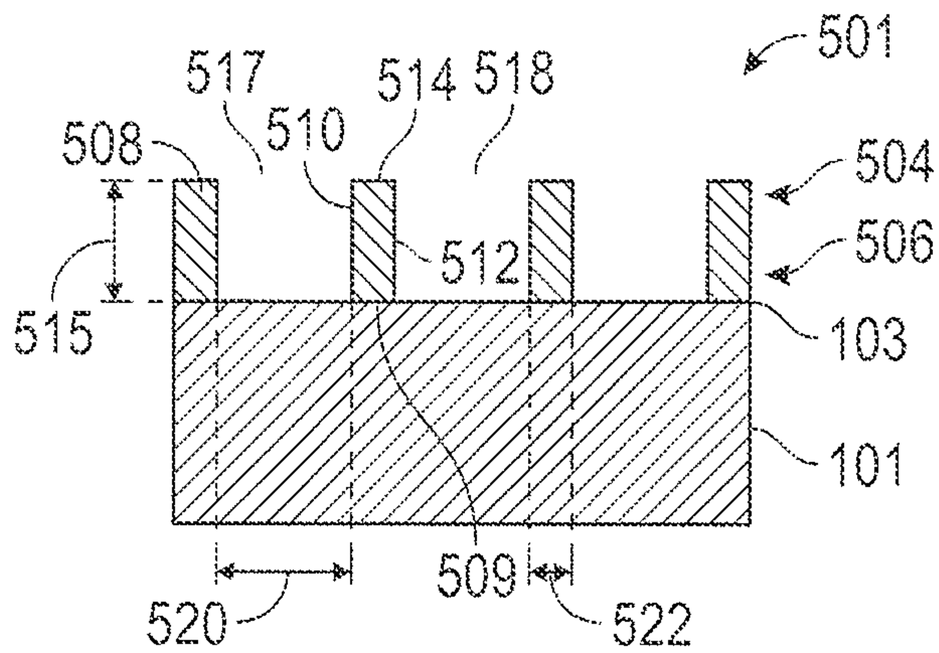

FIG. 5A

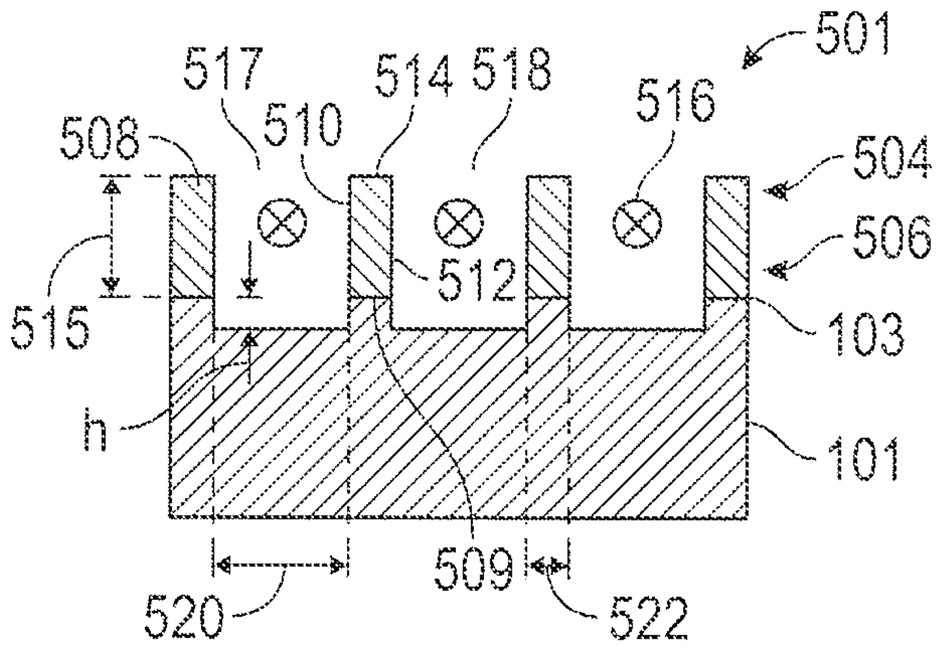

FIG. 5B

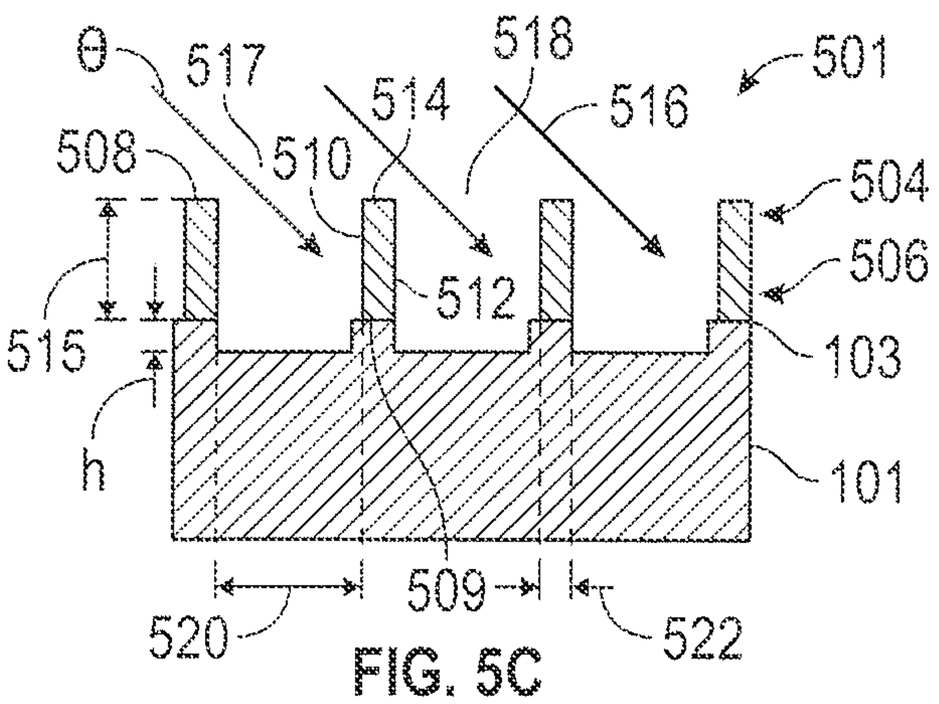

FIG. 5C

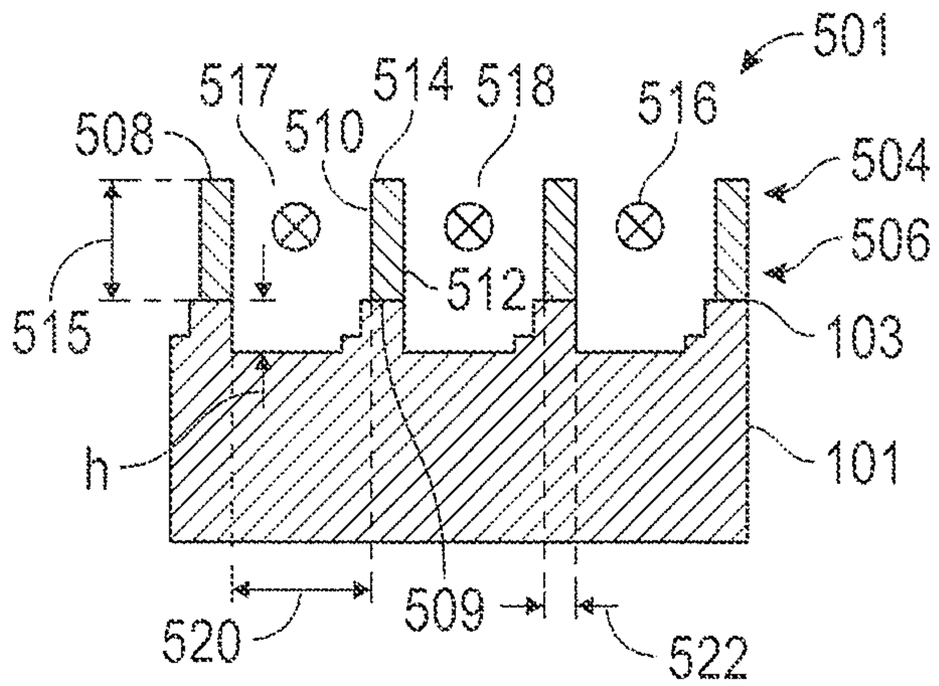

FIG. 5D

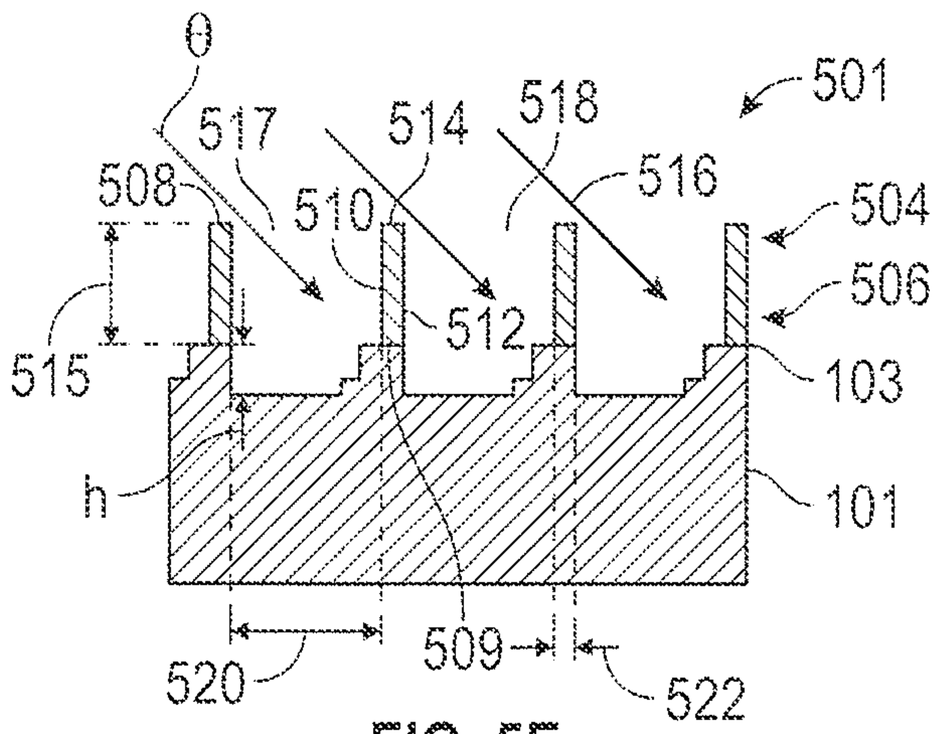

FIG. 5E

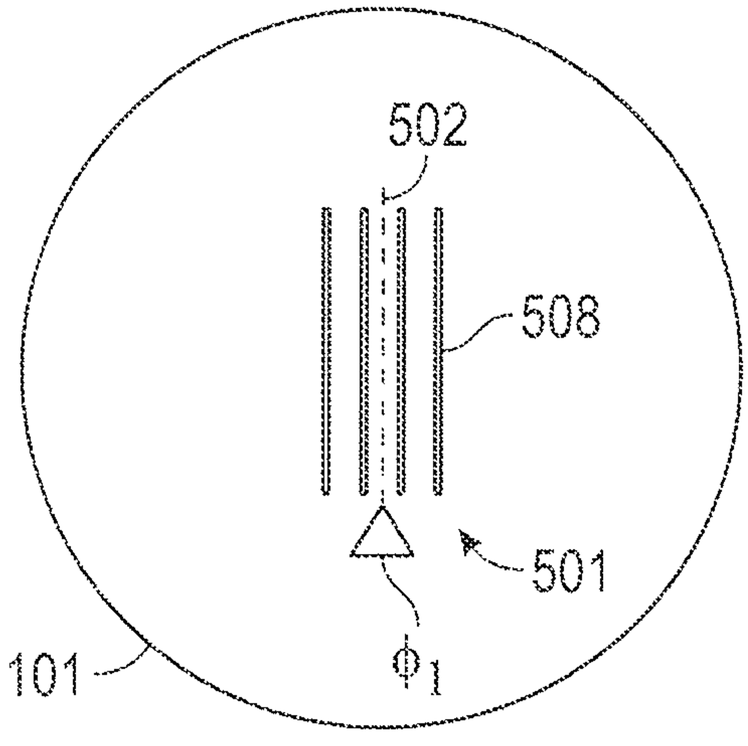

FIG. 5F

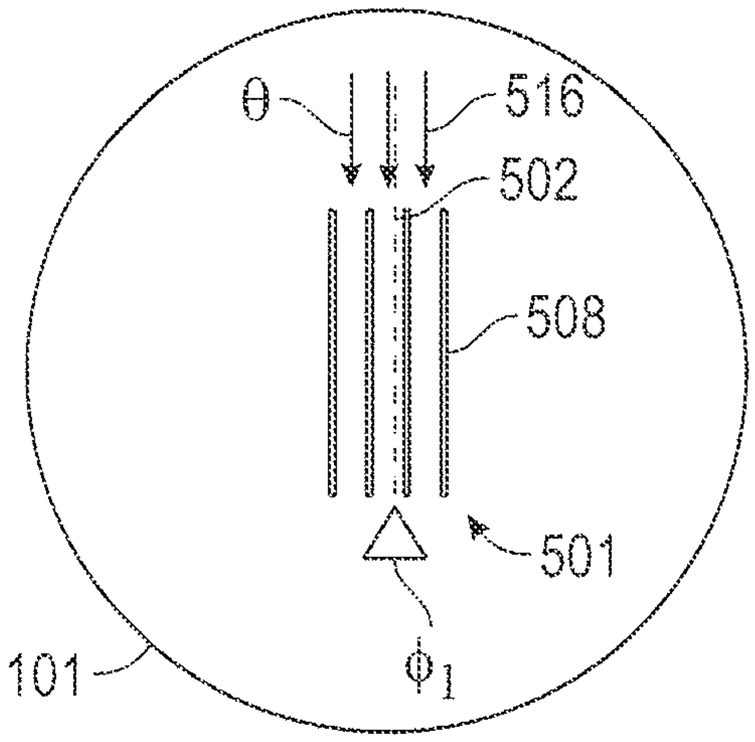

FIG. 5G

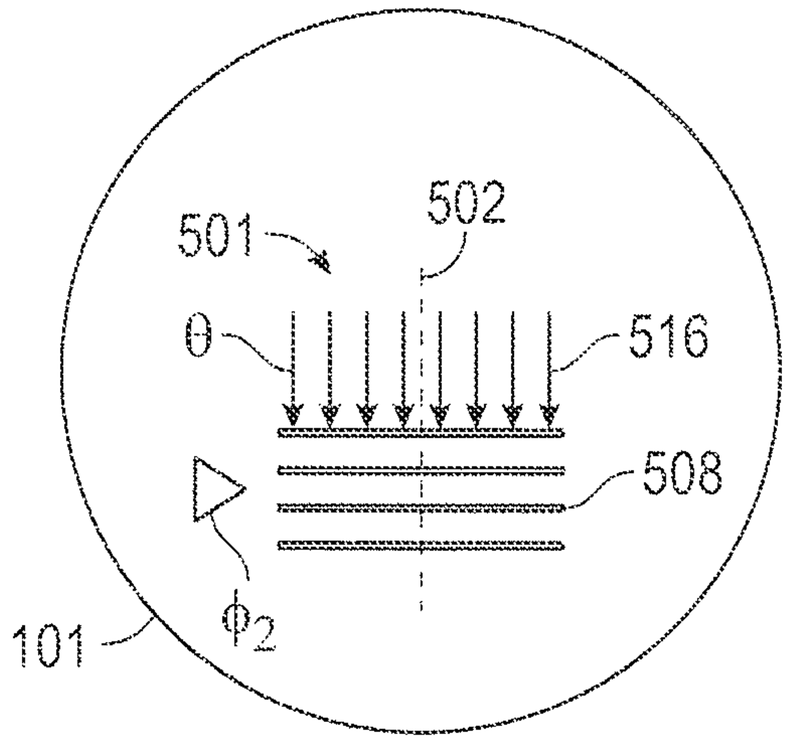

FIG. 5H

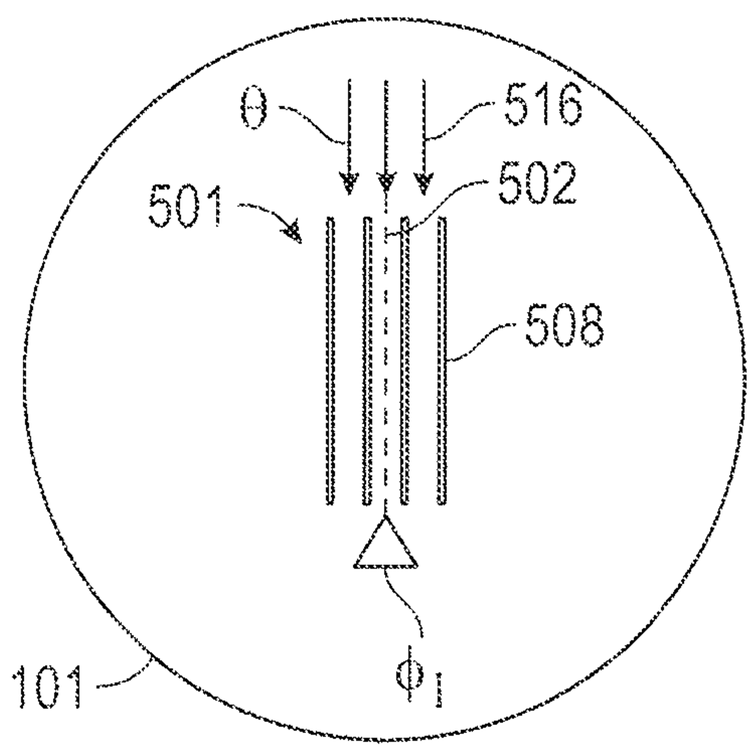

FIG. 5I

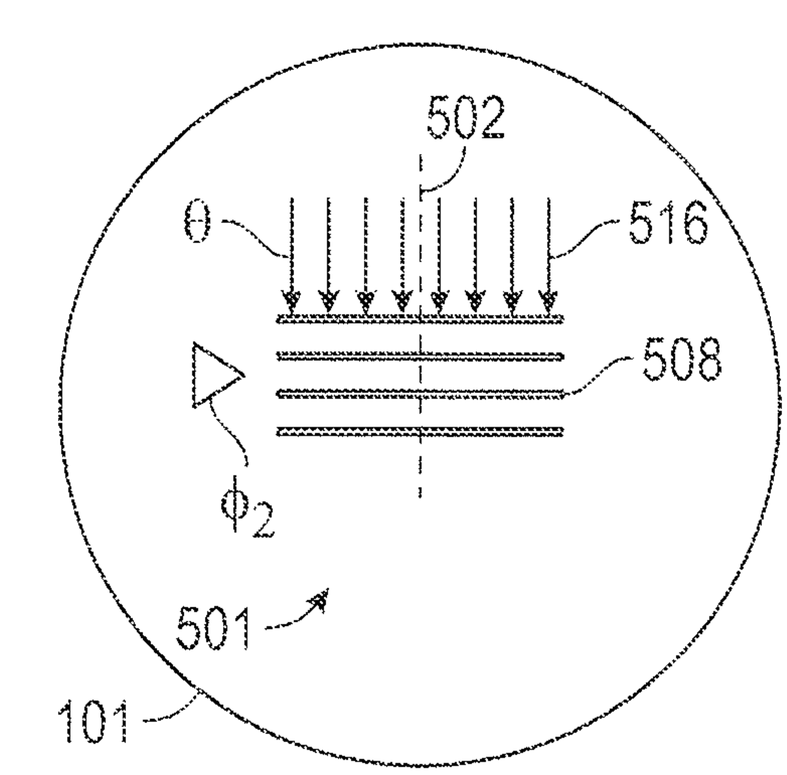

FIG. 5J

METHOD FOR MANUFACTURING OPTICAL DEVICE STRUCTURES

CROSS-REFERENCE TO RELATED APPLICATIONS

This application is a continuation of co-pending U.S. patent application Ser. No. 16/993,067, filed Aug. 13, 2020, which is herein incorporated by reference.

BACKGROUND

Field

Embodiments of the present invention generally relate to optical devices for augmented, virtual, and mixed reality. More specifically, embodiments described herein provide for forming blazed optical device structures.

Description of the Related Art

Virtual reality is generally considered to be a computer generated simulated environment in which a user has an apparent physical presence. A virtual reality experience can be generated in 3 D and viewed with a head-mounted display (HMD), such as glasses or other wearable display devices that have near-eye display panels as lenses to display a virtual reality environment that replaces an actual environment. Augmented reality, however, enables an experience in which a user can still see through the display lenses of the glasses or other HMD device to view the surrounding environment, yet also see images of virtual objects that are generated for display and appear as part of the environment. Augmented reality can include any type of input, such as audio and haptic inputs, as well as virtual images, graphics, and video that enhances or augments the environment that the user experiences. As an emerging technology, there are many challenges and design constraints with augmented reality.

One such challenge is displaying a virtual image overlaid on an ambient environment. Optical devices including waveguide combiners, such as augmented reality waveguide combiners, and flat optical devices, such as metasurfaces, are used to assist in overlaying images. Generated light is propagated through an optical device until the light exits the optical device and is overlaid on the ambient environment. Optical devices may require structures having blazed angles relative to the surface of the optical device substrate. Conventionally, fabricating blazed optical device structures using one or more angled etch tools requires multiple lithographic patterning steps and angled etch steps. The multiple lithographic patterning steps and angled etch steps increase fabrication time and increase cost.

Accordingly, what is needed in the art are improved methods of forming optical devices including blazed optical device structures with angled etch tools.

SUMMARY

In one embodiment, a method is provided. The method includes positioning a substrate at a first rotation angle ϕ_1 in the path of a beam. The beam is configured to be projected to a surface of the substrate at a beam angle ϑ relative to a surface normal of the substrate. A patterned resist is formed over the substrate where the patterned resist includes two or more resist structures and one or more gaps. Each of the resist structures has a width and each of the gaps is defined by adjacent resist structures and has a linewidth defined by the adjacent resist structures. The method includes etching the substrate positioned at the first rotation angle ϕ_1 with the beam and rotating the substrate to a second rotation angle ϕ_2 and etching sidewalls of the resist structures oriented toward the beam such that the width of the resist structures decreases and the linewidth of the gaps increases. The method further includes rotating the substrate to the first rotation angle ϕ_1 and etching the substrate at the first rotation angle ϕ_1 with the beam and forming two or more optical device structures in the substrate. The forming the optical device structures includes repeating the rotating the substrate to the second rotation angle ϕ_2 and the etching sidewalls of the resist structures with the beam and the rotating the substrate to the first rotation angle ϕ_2 and the etching the substrate with the beam until the resist structures are removed or the linewidth of the gaps has a predetermined linewidth.

In another embodiment, a method is provided. The method includes positioning a substrate at a first rotation angle ϕ_1 in the path of a beam. The beam is configured to be projected to a surface of the substrate at a beam angle ϑ relative to a surface normal of the substrate. A device layer is formed over the substrate and a patterned resist is formed on the device layer. The patterned resist includes two or more resist structures and one or more gaps. Each of the resist structures has a width and each of the gaps is defined by adjacent resist structures and has a linewidth defined by the adjacent resist structures. The method includes etching the device layer with the substrate positioned at the first rotation angle ϕ_1 with the beam and rotating the substrate to a second rotation angle ϕ_2 and etching sidewalls of the resist structures oriented toward the beam such that the width of the resist structures decreases and the linewidth of the gaps increases. The method further includes rotating the substrate to the first rotation angle ϕ_1 and etching the device layer at the first rotation angle ϕ_1 with the beam and forming two or more optical device structures in the device layer. The forming the optical device structures includes repeating the rotating the substrate to the second rotation angle ϕ_2 and the etching sidewalls of the resist structures with the beam and the rotating the substrate to the first rotation angle ϕ_2 and the etching the device layer with the beam until the resist structures are removed or the linewidth of the gaps has a predetermined linewidth.

In yet another embodiment, a method is provided. The method includes positioning a substrate at a first rotation angle ϕ_1 in the path of a beam. The beam is configured to be projected to a surface of the substrate at a beam angle ϑ relative to a surface normal of the substrate. A patterned resist is formed over the substrate where the patterned resist includes two or more resist structures and one or more gaps. Each of the resist structures has a width and each of the gaps is defined by adjacent resist structures and has a linewidth defined by the adjacent resist structures. The substrate is etched by the beam generated by a substrate etch chemistry and the resist structures are etched by the beam generated by a resist etch chemistry different than the substrate etch chemistry. The method further includes etching the substrate positioned at the first rotation angle ϕ_1 with the beam generated by the substrate etch chemistry and rotating the substrate to a second rotation angle ϕ_2 and etching sidewalls of the resist structures with the beam at the beam angle ϑ. The beam generated by the resist etch chemistry etches sidewalls of resist structures oriented toward the beam such that the width of the resist structures decreases and the linewidth of the gaps increases. The method further includes

rotating the substrate to the first rotation angle ϕ_1 and etching the substrate at the first rotation angle ϕ_1 with the beam generated by the substrate etch chemistry and forming two or more optical device structures in the substrate. The forming the optical device structures comprises repeating the rotating the substrate to the second rotation angle ϕ_2 and the etching sidewalls of the resist structures with the beam generated by the resist etch chemistry and rotating the substrate to the first rotation angle ϕ_1 and the etching the substrate with the beam generated by the substrate etch chemistry until the resist structures are removed or the linewidth of the gaps has a predetermined linewidth.

BRIEF DESCRIPTION OF THE DRAWINGS

So that the manner in which the above recited features of the present disclosure can be understood in detail, a more particular description of the disclosure, briefly summarized above, may be had by reference to embodiments, some of which are illustrated in the appended drawings. It is to be noted, however, that the appended drawings illustrate only exemplary embodiments and are therefore not to be considered limiting of its scope, and may admit to other equally effective embodiments.

FIG. **1**A is a perspective, frontal view of an optical device according to embodiments described herein.

FIG. **1**B and FIG. **1**C are schematic, cross-sectional views of a plurality of device structures according to embodiments described herein.

FIG. **2** is a schematic, side view of an angled etch system according to embodiments described herein.

FIG. **3** is a schematic cross-sectional view of angled etch system according to embodiments described herein.

FIG. **4** is a flow diagram of a method for forming a plurality of blazed device structures of an optical device structure according to embodiments described herein.

FIGS. **5**A-**5**E are schematic, cross sectional views of a portion of a substrate during a method for forming a plurality of blazed device structures according to embodiments described herein.

FIGS. **5**F-**5**J are schematic, top views of a portion of a substrate during a method for forming a plurality of blazed device structures according to embodiments described herein.

To facilitate understanding, identical reference numerals have been used, where possible, to designate identical elements that are common to the figures. It is contemplated that elements and features of one embodiment may be beneficially incorporated in other embodiments without further recitation.

DETAILED DESCRIPTION

Embodiments of the present invention generally relate to optical devices for augmented, virtual, and mixed reality. More specifically, embodiments described herein provide for methods of forming optical device structures. The methods utilize rotation of a substrate, to have the optical device structures formed thereon, and tunability of etch rates of a patterned resist disposed over the substrate and one of a device layer or the substrate to form the optical device structures without multiple lithographic patterning steps and angled etch steps.

In one embodiment, the method includes positioning a substrate at a first rotation angle ϕ_1 in a path of a beam, the beam configured to be projected to a surface of the substrate at a beam angle ϑ relative to a surface normal of the substrate. The substrate has a patterned resist formed thereover. The patterned resist includes two or more resist structures. Each of the resist structures has a width and one or more gaps. Each of the gaps is defined by adjacent resist structures and having a linewidth defined by the adjacent resist structures. The substrate positioned at the first rotation angle ϕ_1 is etched with the beam. The substrate is rotated to a second rotation angle ϕ_2 and sidewalls of the resist structures are etched with the beam at the beam angle ϑ such that the width of the resist structures decreases and the linewidth of the gaps increases. The substrate is rotated to the first rotation angle ϕ_1 and the substrate is etched at the first rotation angle ϕ_1 with the beam. Two or more optical device structures are formed in the substrate. The forming the optical device structures includes repeating the rotating the substrate to the second rotation angle ϕ_2 and the etching sidewalls of the resist structures with the beam, and the rotating the substrate to the first rotation angle ϕ_1 and the etching the substrate with the beam until the resist structures are removed or the linewidth of the gaps has a predetermined linewidth.

FIG. **1**A illustrates a perspective, frontal view of an optical device **100**. It is to be understood that the optical device **100** described below is an exemplary optical device. In one embodiment, which can be combined with other embodiments described herein, the optical device **100** is a waveguide combiner, such as an augmented reality waveguide combiner. In another embodiment, which can be combined with other embodiments described herein, the optical device **100** is a flat optical device, such as a metasurface. The optical device **100** includes a plurality of device structures **102** disposed in (as shown in FIG. **1**B) or on (as shown in FIG. **1**C) a substrate **101**. As shown in FIG. **1**C, the device structures **102** are formed in a device layer **114** formed on the substrate **101**. The device structures **102** may be nanostructures having sub-micron dimensions, e.g., nano-sized dimensions, such as critical dimensions less than 1 μm. In one embodiment, which can be combined with other embodiments described herein, regions of the device structures **102** correspond to one or more gratings **104**, such as a first grating **104***a*, a second grating **104***b*, and a third grating **104***c*. In one embodiment, which can be combined with other embodiments described herein, the optical device **100** is a waveguide combiner that includes at least the first grating **104***a* corresponding to an input coupling grating and the third grating **104***c* corresponding to an output coupling grating. The waveguide combiner according to the embodiment, which can be combined with other embodiments described herein, may include the second grating **104***b* corresponding to an intermediate grating.

FIG. **1**B and FIG. **1**C are schematic, cross-sectional view of a plurality of device structures **102**. In one embodiment, which can be combined with other embodiments described herein, the device structures **102** are blazed device structures **106** of a flat optical device, such as a metasurface. The method **400** described herein forms the blazed devices structures **106**. In another embodiment, which can be combined with other embodiments described herein, the device structures **102** are blazed device structures **106** of a waveguide combiner, such as an augmented reality waveguide combiner. The waveguide combiner according to the embodiment, which can be combined with other embodiments described herein, may include blazed devices structures **106** in at least one of the gratings **104**. Each of the blazed device structures **106** includes a blazed surface **108**, a sidewall **112**, a depth h, and a linewidth d. The blazed surface **108** has a plurality of steps **110**. In one embodiment,

which can be combined with other embodiments described herein, the blazed surface **108** includes at least 16 steps **110**, such as greater than 32 steps **110**, for example 64 steps **110**. The blazed surface **108** has a blaze angle γ. The blaze angle γ is the angle between the blazed surface **108** and the surface parallel p of the substrate **101** and the angle between the surface normal of the substrate **101** and facet normal f of the blazed surface **108**. The depth h corresponds to the height of the sidewall **112** and the linewidth d corresponds to the distances between sidewalls **112** of adjacent blazed device structures **106**.

In one embodiment, which can be combined with other embodiments described herein, the blaze angle γ of two or more blazed devices structures **106** are different. In another embodiment, which can be combined with other embodiments described herein, the blaze angle γ of two or more blazed devices structures **106** are the same. In one embodiment, which can be combined with other embodiments described herein, the depth h of two or more blazed devices structures **106** are different. In another embodiment, which can be combined with other embodiments described herein, the depth h of two or more blazed devices structures **106** are the same. In one embodiment, which can be combined with other embodiments described herein, the linewidth d of two or more blazed devices structures **106** are different. In another embodiment, which can be combined with other embodiments described herein, the linewidths d of one or more blazed devices structures **106** are the same.

The substrate **101** may also be selected to transmit a suitable amount of light of a desired wavelength or wavelength range, such as one or more wavelengths from about 100 to about 3000 nanometers. Without limitation, in some embodiments, the substrate **101** is configured such that the substrate **101** transmits greater than or equal to about 50% to about 100% of an IR to UV region of the light spectrum. The substrate **101** may be formed from any suitable material, provided that the substrate **101** can adequately transmit light in a desired wavelength or wavelength range and can serve as an adequate support for the blazed devices structures **106** (when the blazed devices structures **106** are formed in the device layer **114**) described herein. Substrate selection may include substrates of any suitable material, including, but not limited to, amorphous dielectrics, non-amorphous dielectrics, crystalline dielectrics, silicon oxide, polymers, and combinations thereof. In some embodiments, which can be combined with other embodiments described herein, the substrate **101** includes a transparent material. Suitable examples may include an oxide, sulfide, phosphide, telluride or combinations thereof. In one example, the substrate **101** includes silicon (Si), silicon dioxide (SiO_2), germanium (Ge), silicon germanium (SiGe), sapphire, and high-index transparent materials such as high-refractive-index glass.

In some embodiments, which can be combined with other embodiments described herein, the device layer **114** includes, but is not limited to, one or more of silicon oxycarbide (SiOC), titanium dioxide (TiO_2), silicon dioxide (SiO_2), vanadium (IV) oxide (VOx), aluminum oxide (Al_2O_3), aluminum-doped zinc oxide (AZO), indium tin oxide (ITO), tin dioxide (SnO_2), zinc oxide (ZnO), tantalum pentoxide (Ta_2O_5), silicon nitride (Si_3N_4), zirconium dioxide (ZrO_2), niobium oxide (Nb_2O_5), cadmium stannate (Cd_2SnO_4), or silicon carbon-nitride (SiCN) containing materials. In some embodiments, which can be combined with other embodiments described herein, the material of the device layer **114** may have a refractive index between about 1.5 and about 2.65. In other embodiments, which can be combined with other embodiments described herein, the material of the device layer **114** may have a refractive index between about 3.5 and about 4.0.

FIG. **2** is a schematic, side view of an angled etch system **200**. It is to be understood that the angled etch system **200** described below is an exemplary angled etch system and other angled etch systems may be used with or modified to fabricate the optical devices **100** having blazed device structures **106** in accordance with the embodiments of the disclosure.

The angled etch system **200** includes an ion beam chamber **202**. A power source **204**, a first gas source **206**, and a second gas source are coupled to the ion beam chamber **202**. In one embodiment, which can be combined with other embodiments described herein, the power source **204** is a radio frequency (RF) power source. The first gas source **206** is in fluid communication with the interior volume **205** of ion beam chamber **202**. The first gas source **206** is an inert gas source which supplies an inert gas, such as argon, hydrogen, or helium, to the ion beam chamber **202**. The second gas source **208** is in fluid communication with the interior volume **205** of ion beam chamber **202**. The second gas source **208** is a process gas source which supplies a process gas to the ion beam chamber **202**. The process gas includes, but is not limited to, one or more of a chlorine containing gas, a fluorine containing gas, a bromine containing gas, an oxygen containing gas, a silicon containing gas, nitrogen containing gas, hydrogen containing gas, or the like. In the embodiments of the method **400** described herein, which can be combined with other embodiments described herein, two or more process gases may be utilized.

A first process gas may have a substrate etch chemistry that is selective to a resist material. The etch selectivity of the first process gas having the substrate etch chemistry provides for a selectivity of the substrate material to the resist material (described below) of about 5:1 or greater. The etch selectivity of the first process gas having the device material etch chemistry provides for a selectivity of the device material to a resist material of about 5:1 or greater. In one embodiment, which can be combined with other embodiments described herein, the substrate etch chemistry includes a chlorine containing gas, a fluorine containing gas, or a combination thereof. In another embodiment, which can be combined with other embodiments described herein, the device material etch chemistry includes the chlorine containing gas, the fluorine containing gas, or the combination thereof.

A second process gas may have a resist etch chemistry that is selective to the substrate material or device material. The etch selectivity of the second process gas having the resist etch chemistry provides for a selectivity of the resist material to the substrate material of about 10:1 or greater or a selectivity of the resist material to the device material of about 10:1 or greater. In one embodiment, which can be combined with other embodiments described herein, the resist etch chemistry includes oxygen gas (O_2) and carbon tetrafluoride (CF_4). In another embodiment, which can be combined with other embodiments described herein, the resist etch chemistry includes argon gas (Ar), nitrogen gas (N_2), and hydrogen gas (H_2). In yet another embodiment, which can be combined with other embodiments described herein, the resist etch chemistry includes nitrogen gas (N_2) and hydrogen gas (H_2).

In operation, a plasma is generated in the ion beam chamber **202** by applying RF power via the power source **204** to the inert gas and the process gas provided to the interior volume **205** of ion beam chamber **202** to generate a plasma. Ions of the plasma of the inert gas and the process

gas are extracted through an aperture **210** of an extraction plate **212** to generate an ion beam **216**. The aperture **210** of the ion beam chamber **202** is operable to direct the ion beam **216** at an angle α relative to a datum plane **218** oriented normal to the substrate **101** (i.e., the surface normal s). The ion beam **216** includes, but is not limited to, a spot beam, a ribbon beam, or a full substrate-size beam. The ion beam **216** generated includes one of the substrate etch chemistry, the device material etch chemistry, or the resist etch chemistry dependent on the process gas utilized.

The substrate **101** is retained on a platen **214** coupled to a first actuator **219**. The first actuator **219**, which may be a linear actuator, a rotary actuator, a stepper motor, or the like, is configured to move the platen **214** in a scanning motion along a y-direction and/or a z-direction. In one embodiment, which can be combined with other embodiments described herein, the first actuator **219** is further configured to tilt the platen **214** such that the substrate **101** is positioned at a tilt angle β relative to the x-axis of the ion beam chamber **202**. The angle α and tilt angle β result in a beam angle ϑ relative to the datum plane **218** normal to the substrate **101**. A second actuator **220** may also be coupled to the platen **214** to rotate the substrate **101** about the x-axis of the platen **214**.

FIG. **3** is a schematic, cross-sectional view of angled etch system **300**. It is to be understood that the angled etch system **300** described below is an exemplary angled etch system and other angled etch systems may be used with or modified to fabricate the optical devices **100** having blazed device structures **106** in accordance with the embodiments of the disclosure.

The angled etch system **300** includes an electron beam chamber **302**. A power source **304**, a first gas source **306**, and a second gas source **308** are coupled to the electron beam chamber **302**. The first gas source **306** and the second gas source **308** are in fluid communication with the interior volume **305** of electron beam chamber **302**. For example, the first gas source **306** and the second gas source **308** may extend through the electrode **322** or the electrode **322** may include a plurality of apertures to function as a gas delivery showerhead. The first gas source **306** is an inert gas source which supplies the inert gas (as described above) to the electron beam chamber **302**. The second gas source **308** is a process gas source (as described above) which supplies a process gas to the ion beam chamber **202**. In the embodiments of the method **400** described herein, which can be combined with other embodiments described herein, two or more process gases may be utilized. The two or more process gases include the substrate etch chemistry, the device material etch chemistry, and the resist etch chemistry described herein.

The substrate **101** is retained on a platen **314** coupled to a first actuator **321**. The first actuator **321**, which may be a linear actuator, a rotary actuator, a stepper motor, or the like, is configured to raise and lower the platen **314** within the electron beam chamber **302**. A second actuator **320** may also be coupled to the platen **314** to rotate the substrate **101** about a vertical axis of the platen **314**. The platen **314** includes an electrode **324** disposed therein. In one embodiment, the electrode **324** is a chucking apparatus, such as an electrostatic chuck, for securing a substrate **101** thereto during processing of the substrate **101**. Power from the power source **304** may be utilized to bias the electrode **324** to either chuck the substrate **101** to the electrode **324** or influence bombardment of electrons on the substrate **101**.

In operation, a plasma is generated in the electron beam chamber **302** by various bulk and surface processes, for example, by inductive coupling. It is believed that ions generated by an inductively coupled plasma are influenced by an electric field that encourages bombardment of the electrode **322** by the ions generated from the plasma of the inert gas and the process gas. Other plasma generation processes, such as a capacitively coupled arrangement, hollow cathode arrangement, direct current electrode biasing, or electron beam plasma generation processes may be utilized in accordance with the embodiments described herein.

Ion bombardment of the electrode **322** is believed to cause the electrode **322** to emit secondary electrons. Energetic secondary electrons, which have a negative charge, are emitted from the electrode **322**. As such, an electron beam **316** is accelerated from the electrode **322** at beam angle ϑ relative to a datum plane **318** oriented normal to the substrate **101** (i.e., the surface normal s). The electron beam **316** includes, but is not limited to, a spot beam, a ribbon beam, or a full substrate-size beam. The electron beam **316** generated includes one of the substrate etch chemistry, the device material etch chemistry, or the resist etch chemistry dependent on the process gas utilized.

As described herein, the ion beam **216** generated from the angled etch system **200** (e.g., an ion beam etch system) and electron beam **316** generated from the angled etch system **300** (e.g., an electron beam etch system) are collectively described as a beam **516** (as shown in FIGS. **5**A-**5**J) where the beam **516** is one of an ion beam or an electron beam. In embodiments of the method **400**, which can be combined with other embodiments described, the beam **516** has one of the substrate etch chemistry, the device material etch chemistry, or the resist etch chemistry at operations of the method **400** described herein. In some embodiments, which may be combined with other embodiments described herein, at least the substrate etch chemistry and resist etch chemistry are different. In other embodiments, which may be combined with other embodiments described herein, at least the device material etch chemistry and resist etch chemistry are different. As described herein, the tunability of etch rates of the resist material **506** and one of a device layer **114** or the substrate **101** and rotation of the substrate **101** form the blazed optical device structures without multiple lithographic patterning steps and angled etch steps.

FIG. **4** is a flow diagram of a method **400** for forming a plurality of blazed device structures **106** of an optical device structure **100** as shown in FIGS. **5**A-**5**E and **5**F-**5**J. FIGS. **5**A-**5**E are schematic, cross sectional views of a portion **501** of a substrate **101** during the method **400**. FIGS. **5**F-**5**J are schematic, top views of the portion **501** of the substrate **101** during the method **400**.

To facilitate explanation, the method **400** will be described with reference to the angled etch system **200** of FIG. **2** and the angled etch system **300** of FIG. **3**. However, it is to be noted that angled etch systems other than the angled etch systems **200**, **300** may be utilized in conjunction with method **400**. In one embodiment, which can be combined with other embodiments described herein, the portion **501** may correspond to a portion or a whole surface of the substrate **101** of a flat optical device to have the plurality of blazed device structures **106** formed thereon. In another embodiment, which can be combined with other embodiments described herein, the portion **501** may correspond to a portion or a whole surface of the substrate **101** of a waveguide combiner to have the plurality of blazed device structures **106** formed thereon. The portion **501** may correspond to one or more gratings **104**. While FIGS. **5**A-**5**E and FIGS. **5**F-**5**J depict etching the substrate **101** such that the blazed device structures **106** are disposed in the substrate, a

device layer **114** (as described above) may be disposed on the surface **103** such that the blazed device structures **106** are disposed in the device layer **114**.

At operation **401**, as shown in FIGS. **5**A and **5**F, a substrate **101** is positioned at a first rotation angle ϕ_1 as defined by datum line **502**, as shown in FIG. **5**F. In one embodiment, which may be combined with other embodiments described herein, the first rotation angle ϕ_1 is 0° defined by datum line **502**. The substrate **101** or the device layer **114** (not shown) includes a patterned resist **504** disposed thereon. The pattern resist **504** includes a resist material **506** that is patterned into a plurality of resist structures **508** disposed over a surface **103** of substrate **101**. The resist material **506** of the patterned resist **504** is selected based on the substrate etch chemistry (in embodiments in which the substrate **101** is etched to form the blazed device structures **106**) or the device material etch chemistry (in embodiments in which the device layer **114** is etched to form the blazed device structures **106**). In one embodiment, the resist material **506** is a photosensitive material such that the patterned resist **504** may be patterned by a lithography process, such as photolithography or digital lithography, or by laser ablation process to form the plurality of resist structures **508**. In one embodiment, the resist material **506** is an imprintable material that the patterned resist **504** may be patterned by a nanoimprint process to form the plurality of resist structures **508**. In another embodiment, which may be combined with other embodiments described herein, the resist material **506** is a hardmask material and the patterned resist **504** is a patterned via one or more etch processes to form the plurality of resist structures **508**. In yet another embodiment, which may be combined with other embodiments described herein, the patterned resist **504** is an optical planarization layer.

Each resist structure **508** includes a bottom surface **509**, a first sidewall **510**, a second sidewall **512**, and a top surface **514**. Each resist structure **508** has a height **515** from the bottom surface **509** to the top surface **514**. Each resist structure **508** has a width **522** from the first sidewall **510** to the second sidewall **512** of the resist structure **508**. A plurality of gaps **518** are defined by adjacent resist structures **508**. Each of the gaps **518** has a linewidth **520** between the first sidewall **510** and the second sidewall **512** of adjacent resist structures **508**. The height **515**, the linewidth **520**, and the width **522** are selected to tune the number of steps **110** of blazed surface **108** and the linewidth d of the plurality of blazed device structures **106**. For example, increasing the height **515** increases the number of repeated intervals of etching the substrate **101** (or device layer **114**) and the resist structure **508** such that the number of steps **110** is increased.

At operation **402**, the substrate **101** is exposed to the beam **516** at the beam angle ϑ relative to the surface normal of the substrate **101**. In one embodiment, which can be combined with other embodiments described herein, the beam angle ϑ is about 10 degrees to about 80 degrees relative to the surface normal of the substrate **101**. The beam **516** has the substrate etch chemistry or device etch chemistry that is selective to the resist material **506**, i.e., exposed portions **517** of the substrate **101** or exposed portions of the device layer **114** (not shown) are removed at a higher rate than the resist material **506**. After the beam **516** etches the exposed portions of the substrate **101**, at operation **402** (as shown in FIG. **5**B) the depth h of the exposed portions **517** corresponding to the blazed device structures **106** is formed.

At operation **403**, substrate **101** is rotated to a second rotation angle ϕ_2 defined by datum line **502**, as shown in FIG. **5**H. In one embodiment, which can be combined with other embodiments described herein, the platen **214**, **314** retaining substrate **101** is rotated to a second rotation angle ϕ_2. In another embodiment, which can be combined with other embodiments described herein, the second rotation angle ϕ_2 corresponds to 90° relative to datum line **502**. The rotating of the substrate **101** is not limited to a rotation angle ϕ corresponding to 90° but may correspond to any predetermined angle ϕ. The rotation enables the beam **516** to contact resist structures **508** due to a shadowing effect. In one embodiment, which can be combined with other embodiments described herein, the beam **516** will remain at a beam angle ϑ relative to a datum plane **218**, **318** oriented normal to the substrate **101** (i.e., the surface normal s) throughout method **400**. The constant beam angle allows for the throughput to increase because there will not be a need to reconfigure the beam angle ϑ. In one embodiment, which can be combined with other embodiments described herein, the method **400** described herein uses only one angled etch system **200**, **300** and requires the resist material **506** to only be patterned once to provide for high volume production capability.

At operation **404**, the resist structures are exposed to the beam **516** at the beam angle ϑ. The beam **516** etches one of either the first sidewall **510** or the second sidewall **512**, corresponding to which sidewall **510**, **512** is exposed to the beam **516**. In the embodiment which can be combined with other embodiments described herein, the first sidewall **510** is exposed to the beam **516**. The beam **516** has a chemistry corresponding to the resist etch chemistry so that the ions or electrons will only substantially etch the resist structures **508** during the resist etch process. The resist etch chemistry is selective to the substrate **101** or device layer **114**, i.e., the resist structures **508** are removed at a higher rate than the device layer **114** or substrate **101**. After the beam **516** etches the resist structures **508**, the width **522** of resist structure **508** decreases relative to the width shown in FIGS. **5**A and **5**B. The linewidth **520** between the first sidewall and the second sidewall increases relative to the linewidth shown in FIGS. **5**A and **5**B.

As shown in FIG. **5**C, a first step of the plurality of steps **110** is formed. The plurality of steps **110** forms the blazed surface **108** shown in FIGS. **1**B and **1**C. The blaze angle γ is the angle between the blazed surface **108** and the surface parallel p of the substrate **101**. The blaze angle γ may be achieved by increasing or decreasing the etch rate of beam **516**. The adjustments of blaze angle γ may be accomplished by etching at different rates such that depth h, linewidth **520** and width **522** are at predetermined values corresponding to a different number of steps **110** formed on blazed surface **108**. Thus, the blaze angle γ may be adjusted and the blazed device structures **106**, such as the blazed device structures **106** of a grating **104**, may modulate light propagating through the optical device **100** as desired.

At operation **405**, operations **401**-**404** are repeated until a predetermined number of steps **110** (as shown in FIGS. **1**B and **1**C) are formed on optical device **100**. In one embodiment, which can be combined with other embodiments described herein, the substrate **101** is rotated to the first rotation angle ϕ_1 and substrate **101** or device layer **114** are etched with the beam **516** until the resist structures **508** are removed or the linewidth **520** of the gaps **518** has a predetermined linewidth. As shown in FIG. **5**I, the platen **214**, **314** with substrate **101** positioned thereon is rotated to a first rotation angle ϕ_1. As shown in FIG. **5**D, the depth h of the exposed portions **517** corresponding to the blazed device structures **106** increases relative to the depth h shown in FIGS. **5**A-**5**C. As shown in FIG. **5**J, the platen **214**, **314** with

substrate **101** positioned thereon is rotated to a second rotation angle ϕ_2 defined by datum line **502**. After the beam **516** etches the resist structures **508**, the width **522** of resist structure **508** decreases relative to the width shown in FIGS. **5**A-**5**D. The linewidth **520** between the first sidewall **510** and the second sidewall **512** increases relative to the linewidth **520** shown in FIGS. **5**A-**5**D. At optional operation **406**, residual resist material **506** disposed on the device layer **114** or substrate **101** is removed. While only four resist structures **508** and three gaps **518** are illustrated, the entire patterned resist **504** may be etched such that the desired number of blazed device structures **106** are formed depending on the predetermined design for the optical device **100**.

In summation, methods of forming optical device structures are described herein. The methods utilize rotation of a substrate, to have the blazed optical device structures formed thereon, and tunability of etch rates of a patterned resist disposed over the substrate and one of a device layer or the substrate to form the blazed optical device structures without multiple lithographic patterning steps and angled etch steps. The constant beam angle allows for the throughput to increase because there will not be a need reconfigure the beam angle ϑ. Only one angled etch system may be used and the resist material would only need to be patterned once to provide for high volume production capability.

While the foregoing is directed to embodiments of the present disclosure, other and further embodiments of the disclosure may be devised without departing from the basic scope thereof, and the scope thereof is determined by the claims that follow.

What is claimed is:

1. An augmented reality waveguide combiner, comprising:

an optical device substrate, the optical device substrate comprising a substrate material; and

an input coupling grating disposed over the optical device substrate, the input coupling grating comprising a device material different than the substrate material, the input coupling grating having a plurality of blazed device structures, each blazed device structure of the plurality of blazed device structures includes a blazed surface, the blazed surface having:

at least 16 steps;

a facet normal of each of the steps parallel to a primary surface of the optical device substrate; and

a blaze angle defined by the blazed surface and the facet normal; and

an output coupling grating comprising the device material disposed over the optical device substrate and adjacent to the input coupling grating, the output coupling grating having a plurality of device structures.

2. The augmented reality waveguide combiner of claim **1**, wherein the blazed surface has at least 32 steps.

3. The augmented reality waveguide combiner of claim **1**, wherein the blazed surface has at least 64 steps.

4. The augmented reality waveguide combiner of claim **1**, wherein the blaze angle of two blazed device structures of the plurality of blazed device structures are different.

5. The augmented reality waveguide combiner of claim **1**, wherein the blaze angle of two blazed device structures of the plurality of blazed device structures are the same.

6. The augmented reality waveguide combiner of claim **1**, wherein two blazed device structures of the plurality of blazed device structures have different depths.

7. The augmented reality waveguide combiner of claim **1**, wherein the device material of the input coupling grating comprises one or more of silicon oxycarbide (SiOC), titanium dioxide (TiO_2), silicon dioxide (SiO_2), vanadium (IV) oxide (VOx), aluminum oxide (Al_2O_3), aluminum-doped zinc oxide (AZO), indium tin oxide (ITO), tin dioxide (SnO_2), zinc oxide (ZnO), tantalum pentoxide (Ta_2O_5), silicon nitride (Si_3N_4), zirconium dioxide (ZrO_2), niobium oxide (Nb_2O_5), cadmium stannate (Cd_2SnO_4), or silicon carbon-nitride (SiCN) containing materials.

8. The augmented reality waveguide combiner of claim **1**, wherein the substrate material of the optical device substrate comprises non-amorphous dielectrics, crystalline dielectrics, silicon oxide, polymers, or combinations thereof.

9. The augmented reality waveguide combiner of claim **1**, wherein the substrate material of the optical device substrate comprises silicon (Si), silicon dioxide (SiO_2), germanium (Ge), silicon germanium (SiGe), sapphire, or combinations thereof.

10. The augmented reality waveguide combiner of claim **1**, wherein the optical device substrate is configured to transmit wavelengths from 100 to 3000 nanometers.

11. The augmented reality waveguide combiner of claim **1**, wherein each blazed device structure of the plurality of blazed device structures has a refractive index between 1.5 and 2.65.

12. The augmented reality waveguide combiner of claim **1**, wherein each blazed device structure of the plurality of blazed device structures has a refractive index between 3.5 and 4.0.

13. An augmented reality waveguide combiner, comprising:

an optical device substrate, the optical device substrate comprising a substrate material; and

an input coupling grating disposed over the optical device substrate, the input coupling grating comprising a device material different than the substrate material, the input coupling grating having a plurality of blazed device structures, each blazed device structure of the plurality of blazed device structures includes a blazed surface, the blazed surface having:

at least 16 steps;

a facet normal of each of the steps parallel to the a primary surface of the optical device substrate; and

a blaze angle defined by the blazed surface and the facet normal, wherein the blaze angle of two blazed device structures of the plurality of blazed device structures are different; and

an output coupling grating comprising the device material disposed over the optical device substrate and adjacent to the input coupling grating, the output coupling grating having a plurality of device structures.

14. The augmented reality waveguide combiner of claim **13**, wherein the two blazed device structures of the plurality of blazed device structures have different depths.

15. The augmented reality waveguide combiner of claim **13**, wherein the device material of the input coupling grating comprises one or more of silicon oxycarbide (SiOC), titanium dioxide (TiO_2), silicon dioxide (SiO_2), vanadium (IV) oxide (VOx), aluminum oxide (Al_2O_3), aluminum-doped zinc oxide (AZO), indium tin oxide (ITO), tin dioxide (SnO_2), zinc oxide (ZnO), tantalum pentoxide (Ta_2O_5), silicon nitride (Si_3N_4), zirconium dioxide (ZrO_2), niobium oxide (Nb_2O_5), cadmium stannate (Cd_2SnO_4), or silicon carbon-nitride (SiCN) containing materials.

16. The augmented reality waveguide combiner of claim **13**, wherein the substrate material of the optical device substrate comprises non-amorphous dielectrics, crystalline dielectrics, silicon oxide, polymers, or combinations thereof.

17. The augmented reality waveguide combiner of claim 13, wherein the substrate material of the optical device substrate comprises silicon (Si), silicon dioxide (SiO_2), germanium (Ge), silicon germanium (SiGe), sapphire or combinations thereof.

18. The augmented reality waveguide combiner of claim 13, wherein the optical device substrate is configured to transmit wavelengths from 100 to 3000 nanometers.

19. The augmented reality waveguide combiner of claim 13, wherein each blazed device structure of the plurality of blazed device structures has a refractive index between 1.5 and 2.65.

20. An augmented reality waveguide combiner, comprising:

an optical device substrate, the optical device substrate comprising a substrate material, wherein the optical device substrate is configured to transmit wavelengths from 100 to 3000 nanometers; and

an input coupling grating disposed over the optical device substrate, the input coupling grating comprising a device material different than the substrate material, the input coupling grating having a plurality of blazed device structures, each blazed device structure of the plurality of blazed device structures has a refractive index between 1.5 and about 2.65, each blazed device structure includes a blazed surface, the blazed surface having:

at least 16 steps;

a facet normal of each of the steps parallel to the primary surface of the optical device substrate;

a blaze angle defined by the blazed surface and the facet normal, the blaze angle of two blazed device structures of the plurality of blazed device structures are different; and

an output coupling grating comprising the device material disposed over the optical device substrate and adjacent to the input coupling grating, the output coupling grating having a plurality of device structures.

* * * * *