US012021102B2

(12) **United States Patent**
Fu et al.

(10) **Patent No.: US 12,021,102 B2**
(45) **Date of Patent: *Jun. 25, 2024**

(54) **IMAGING SYSTEM AND METHOD OF CREATING COMPOSITE IMAGES**

(71) Applicant: **Applied Materials, Inc.**, Santa Clara, CA (US)

(72) Inventors: **Jinxin Fu**, Fremont, CA (US); **Yongan Xu**, Santa Clara, CA (US); **Ludovic Godet**, Sunnyvale, CA (US); **Naamah Argaman**, San Jose, CA (US); **Robert Jan Visser**, Menlo Park, CA (US)

(73) Assignee: **Applied Materials, Inc.**, Santa Clara, CA (US)

(*) Notice: Subject to any disclaimer, the term of this patent is extended or adjusted under 35 U.S.C. 154(b) by 0 days.

This patent is subject to a terminal disclaimer.

(21) Appl. No.: **18/185,863**

(22) Filed: **Mar. 17, 2023**

(65) **Prior Publication Data**

US 2023/0230991 A1 Jul. 20, 2023

Related U.S. Application Data

(63) Continuation of application No. 16/859,708, filed on Apr. 27, 2020, now Pat. No. 11,610,925.
(Continued)

(51) **Int. Cl.**
H01L 27/146 (2006.01)
G02B 1/00 (2006.01)
(Continued)

(52) **U.S. Cl.**
CPC ***H01L 27/14627*** (2013.01); ***G02B 1/002*** (2013.01); ***G02B 27/005*** (2013.01);
(Continued)

(58) **Field of Classification Search**
CPC H04N 5/265; H04N 5/374; H04N 23/16; H04N 23/95; H04N 23/957; H04N 25/134;
(Continued)

(56) **References Cited**

U.S. PATENT DOCUMENTS

7,019,890 B2 3/2006 Meredith et al.
7,366,351 B2 4/2008 Walmsley et al.
(Continued)

FOREIGN PATENT DOCUMENTS

CN 101427372 A 5/2009
CN 106803872 A 6/2017
(Continued)

OTHER PUBLICATIONS

Chinese Office Action for Application No. 202080041362.9 dated Apr. 26 2023.
(Continued)

Primary Examiner — Lin Ye
Assistant Examiner — Chriss S Yoder, III
(74) *Attorney, Agent, or Firm* — Patterson + Sheridan, LLP

(57) **ABSTRACT**

An imaging system and a method of creating composite images are provided. The imaging system includes one or more lens assemblies coupled to a sensor. When reflected light from an object enters the imaging system, incident light on the metalens filter systems creates filtered light, which is turned into composite images by the corresponding sensors. Each metalens filter system focuses the light into a specific wavelength, creating the metalens images. The metalens images are sent to the processor, wherein the processor combines the metalens images into one or more composite
(Continued)

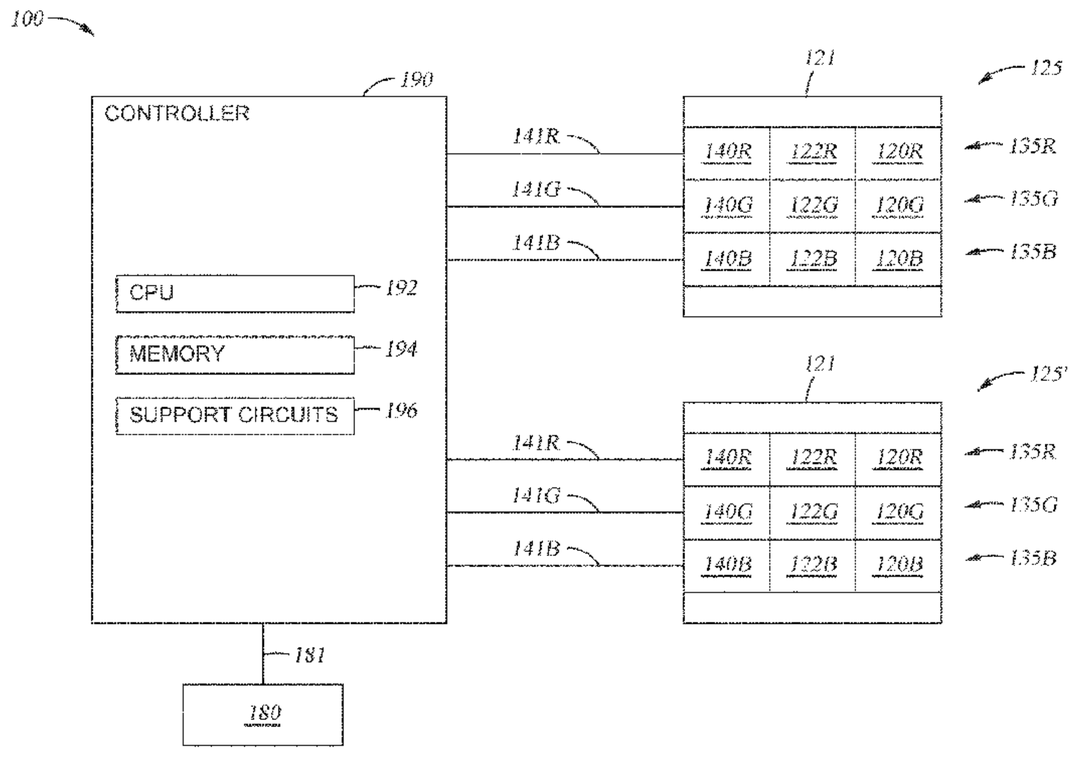

images. The metalens images are combined into a composite image, and the composite image has reduced chromatic aberrations.

20 Claims, 6 Drawing Sheets

Related U.S. Application Data

(60) Provisional application No. 62/858,258, filed on Jun. 6, 2019.

(51) **Int. Cl.**

G02B 27/00	(2006.01)
H04N 5/265	(2006.01)
H04N 23/16	(2023.01)
H04N 25/13	(2023.01)
H04N 25/611	(2023.01)
H04N 25/76	(2023.01)

(52) **U.S. Cl.**

CPC ***H01L 27/14621*** (2013.01); ***H04N 5/265*** (2013.01); ***H04N 23/16*** (2023.01); ***H04N 25/134*** (2023.01); ***H04N 25/611*** (2023.01); ***H04N 25/76*** (2023.01)

(58) **Field of Classification Search**

CPC H04N 25/61; H04N 25/611; H04N 25/76; H01L 27/14621; H01L 27/14627; G06T 5/50; G06T 2207/10024; G06T 2207/20221; G02B 1/002; G02B 5/201; G02B 27/005; G02B 27/0075

See application file for complete search history.

(56) **References Cited**

U.S. PATENT DOCUMENTS

8,599,301	B2	12/2013	Dowski, Jr. et al.	
9,151,891	B2	10/2015	Ma et al.	
9,298,060	B2	3/2016	Shen et al.	
9,583,522	B2	2/2017	Lee et al.	
9,647,150	B2	5/2017	Blasco Claret	
11,610,925	B2 *	3/2023	Fu	G02B 27/005
2009/0250594	A1	10/2009	Tanaka et al.	
2011/0308464	A1	12/2011	Kudoh et al.	
2011/0312187	A1	12/2011	Suzuki et al.	
2012/0189293	A1	7/2012	Cao et al.	
2013/0119236	A1	5/2013	Lenchenkov	
2016/0002788	A1	1/2016	Nal et al.	
2017/0034500	A1	2/2017	Arbabi et al.	
2018/0284428	A1	10/2018	Guenter	
2019/0086683	A1	3/2019	Aieta et al.	
2019/0098187	A1	3/2019	Wang et al.	
2019/0098210	A1	3/2019	Fukuda	
2020/0321378	A1	10/2020	Paiella et al.	

FOREIGN PATENT DOCUMENTS

CN	109348114	A	2/2019
JP	2007520107	A	7/2007
JP	2015181214	A	10/2015
JP	2016197878	A	11/2016
TW	201608711	A	3/2016
WO	2005041562	A1	5/2005
WO	2016/168173	A1	10/2016
WO	2019075335	A1	4/2019

OTHER PUBLICATIONS

International Search Report and Written Opinion for International Application No. PCT/US2020/030036 dated Aug. 11, 2020.

Composite functional metasurfaces for multispectral achromatic optics, Avayu et al., Nature Communications 8, 14992 (2017).

Achromatic metalens over 60 nm bandwidth in the visible and metalens with reverse chromatic dispersion, Khoraseninejad et al., Nano Letters 17, 1819 (2017).

GaN metalens for pixel-level full-cover routing at visible light, Chen et al., Nano Letters 27, 6345 (2017).

Technology, www.light.co/technology, retrieved Apr. 9, 2019.

A broadband achromatic metalens for focusing and imaging in the visible, Chen et al., Nature Nanotechnology 13, 220 (2018).

Broadband high-efficiency dielectric metasurfaces for the visible spectrum, Devlin et al., Proceedings of the National Academy of Sciences 13, 10473 (2016).

Multiwavelength achromatic metasurfaces by dispersive phase compensation, Aieta et al., Science 347, 1342 (2015).

Metaoptics, <http://www.bostonphotonics.org/files/seminars/EOW-2017-FCapasso.pdf>, retrieved Apr. 14, 2019.

High-efficiency large area topology-optimized metasurfaces, Phan et al., Light Science and Applications 8, 1-9, 2019.

Eureopean Search Report issued to Patent Application No. 20818749.2 dated May 9, 2023.

Taiwan Office Action for Application No. 109118273 dated Nov. 27, 2023.

Japanese Office Action issued to Patent Application No. 2021-571524 on Feb. 28, 2024.

* cited by examiner

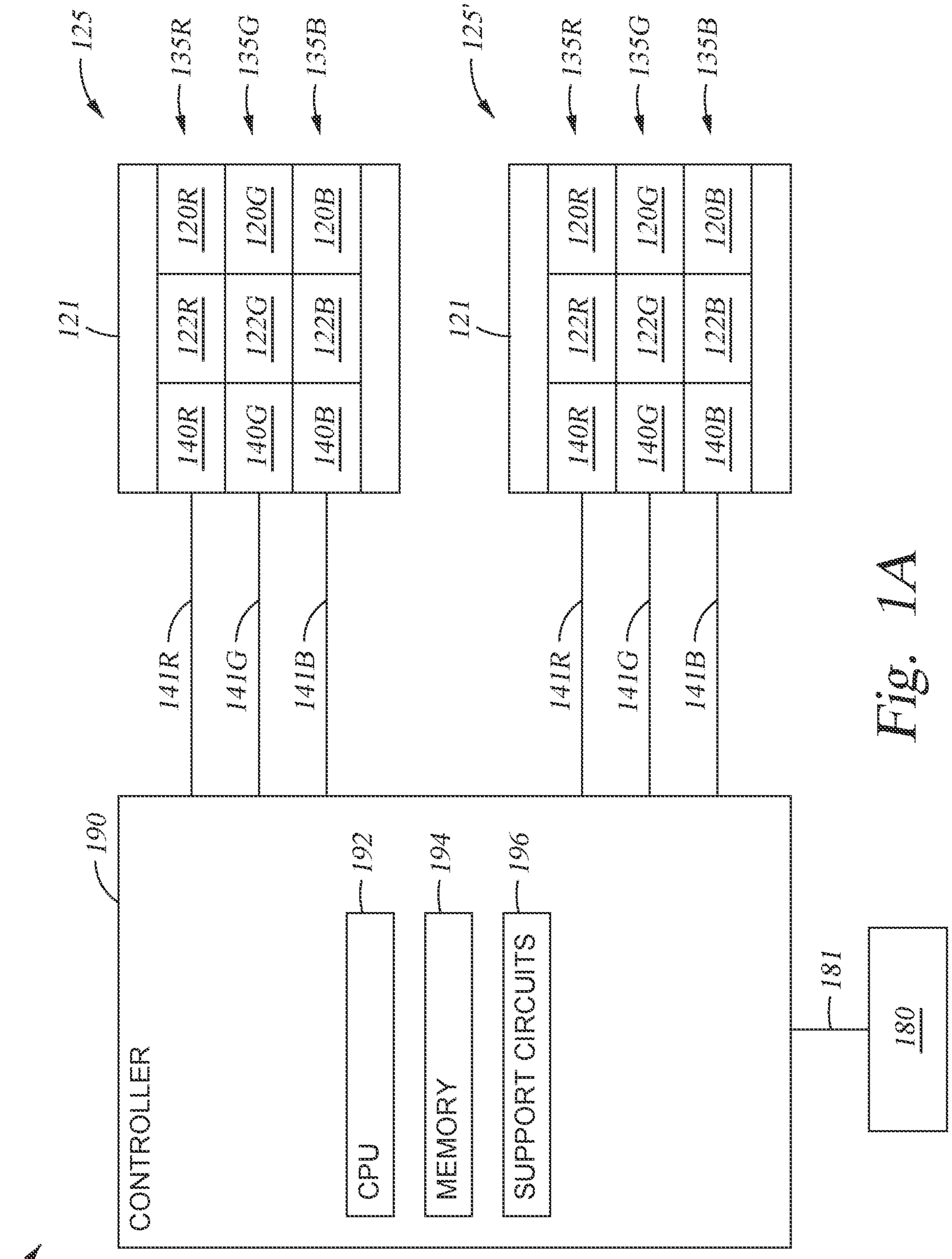
100
CONTROLLER
CPU
MEMORY
SUPPORT CIRCUITS
190
192
194
196
181
180
121
125
125'
135R
135G
135B
120R
120G
120B
122R
122G
122B
140R
140G
140B
141R
141G
141B

Fig. 1A

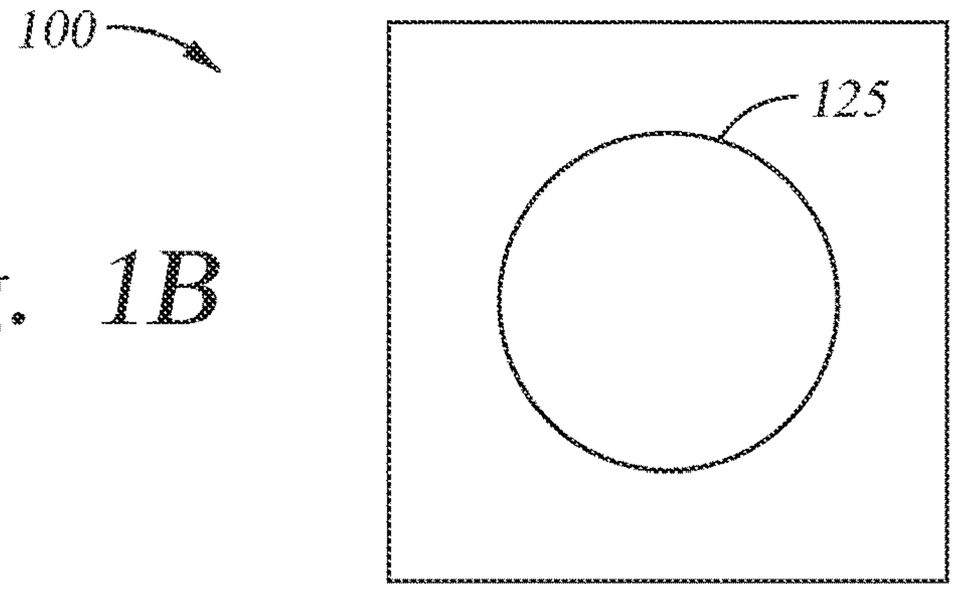

Fig. 1B

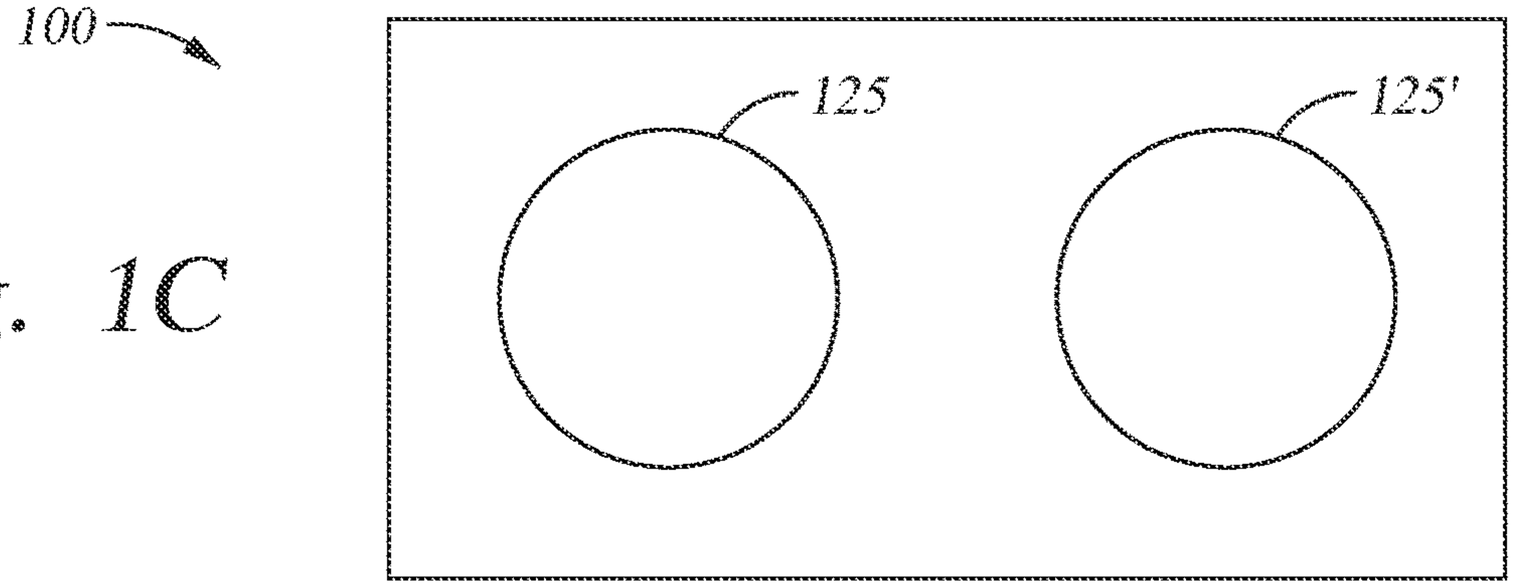

Fig. 1C

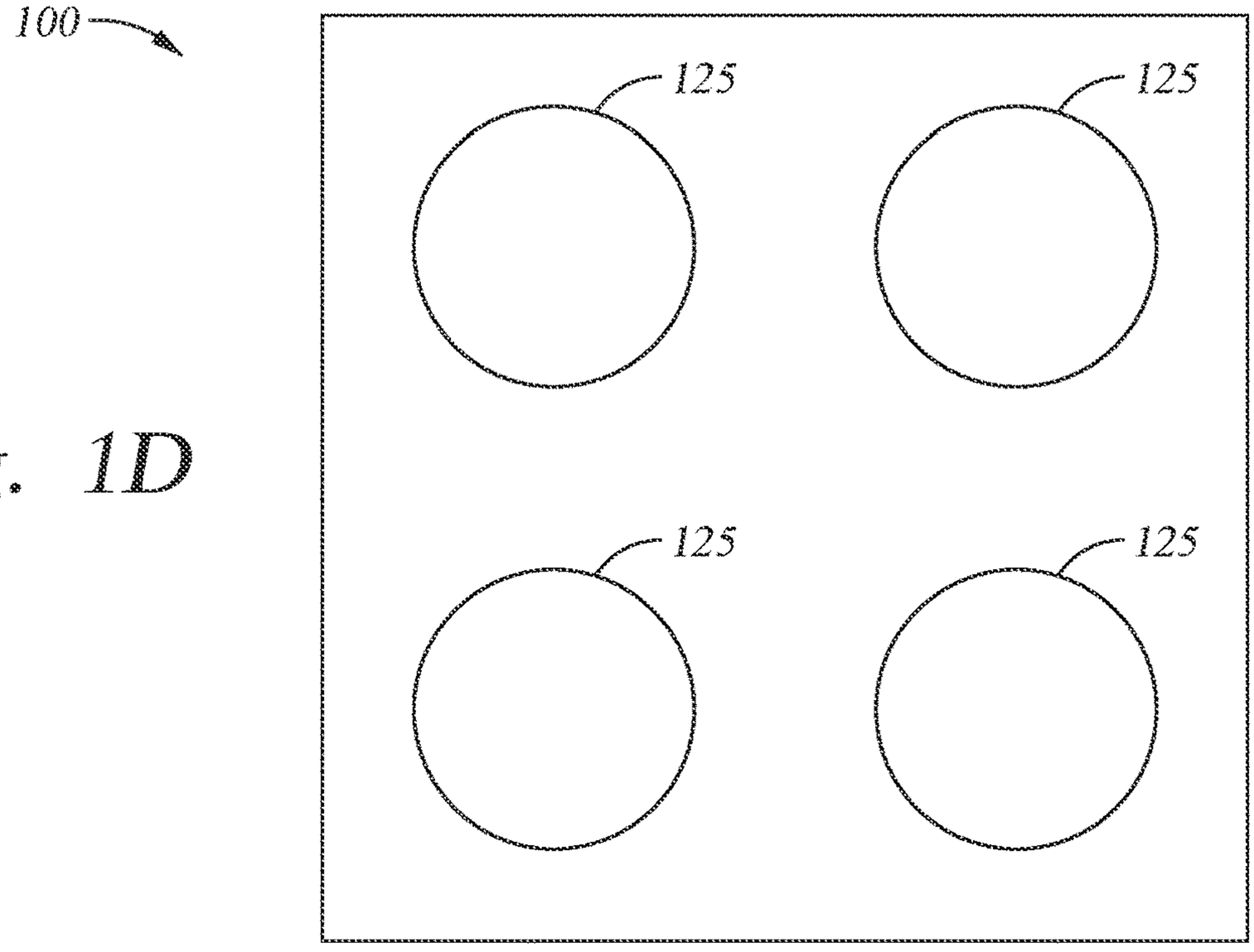

Fig. 1D

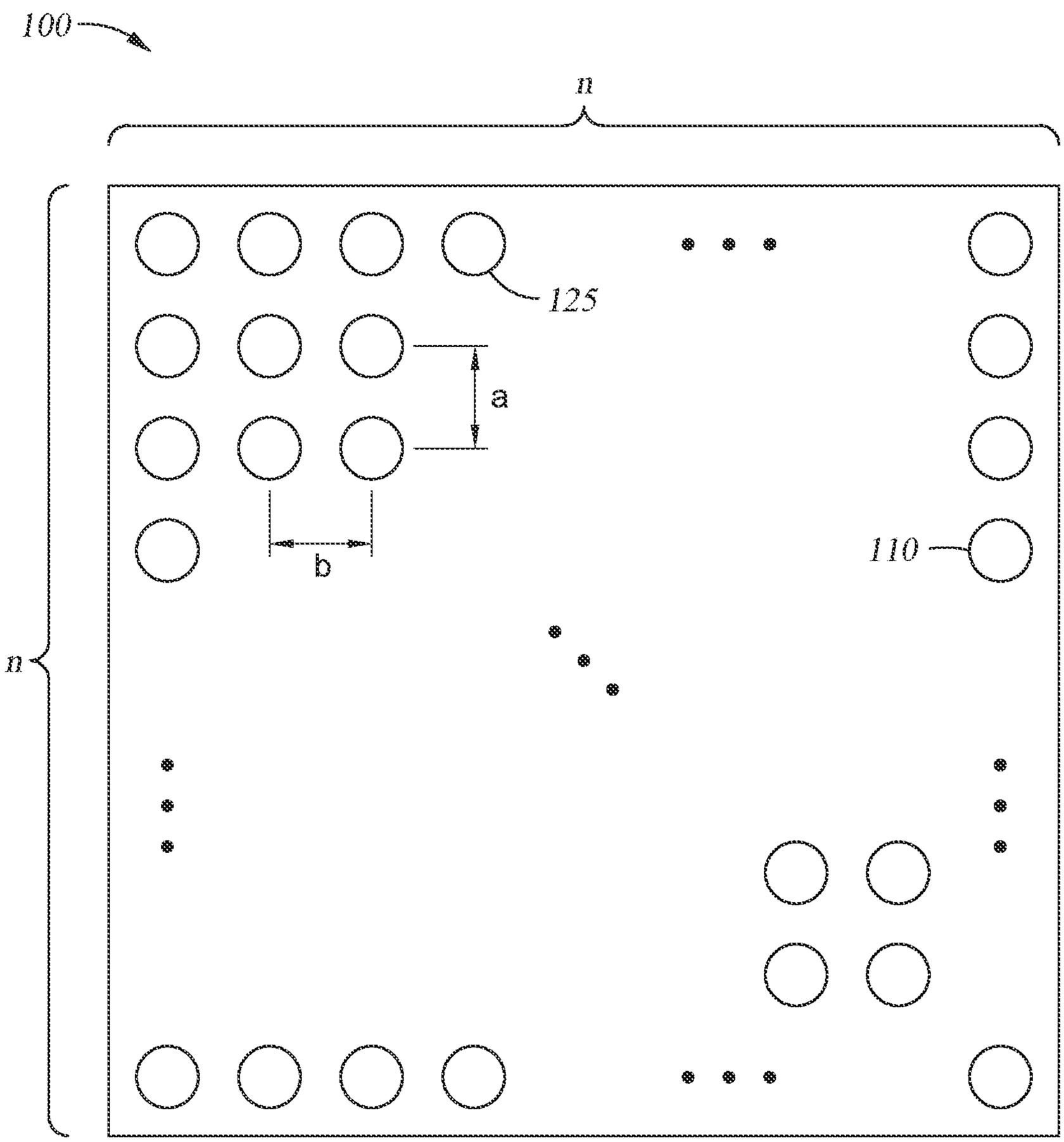

Fig. 1E

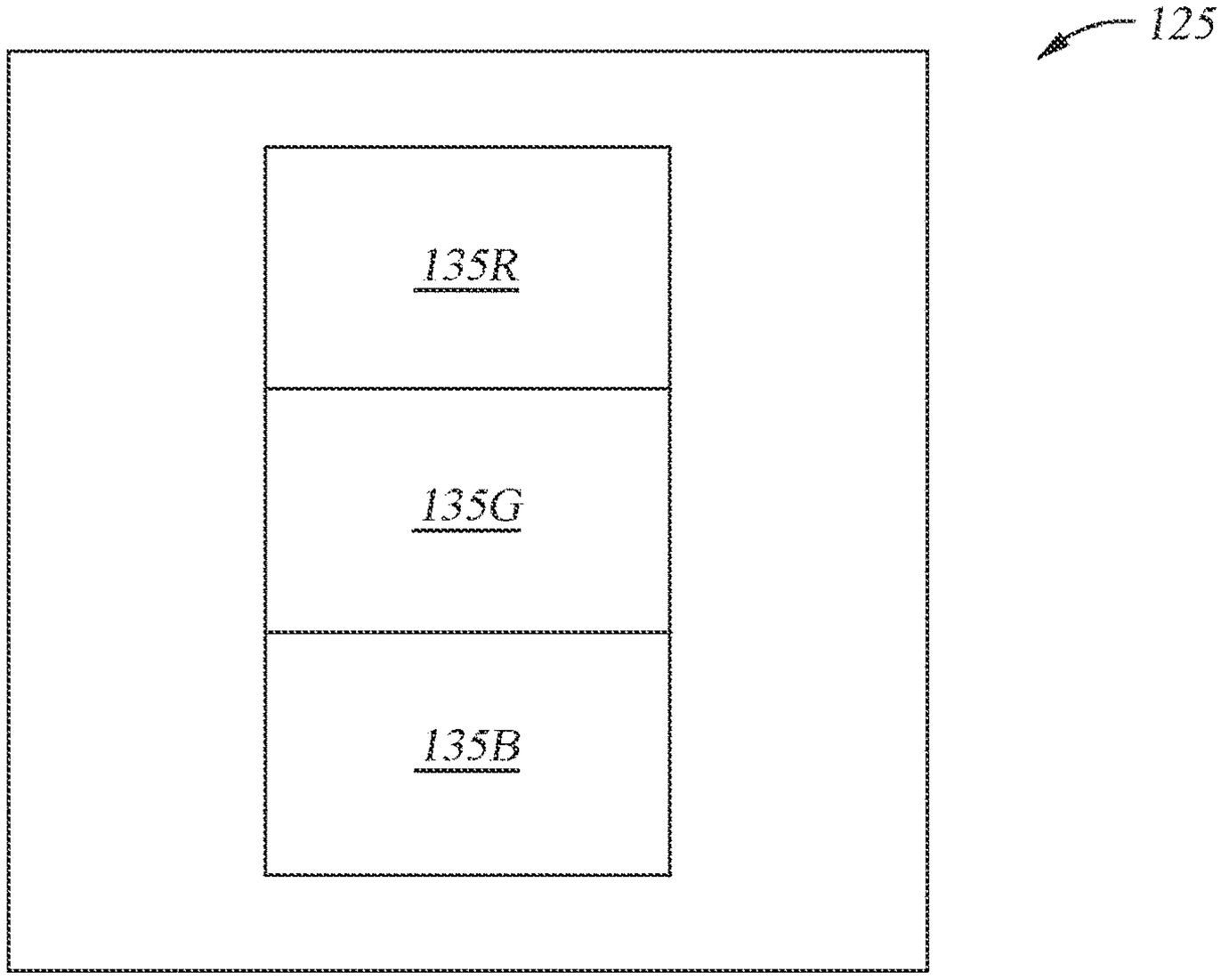

Fig. 2A

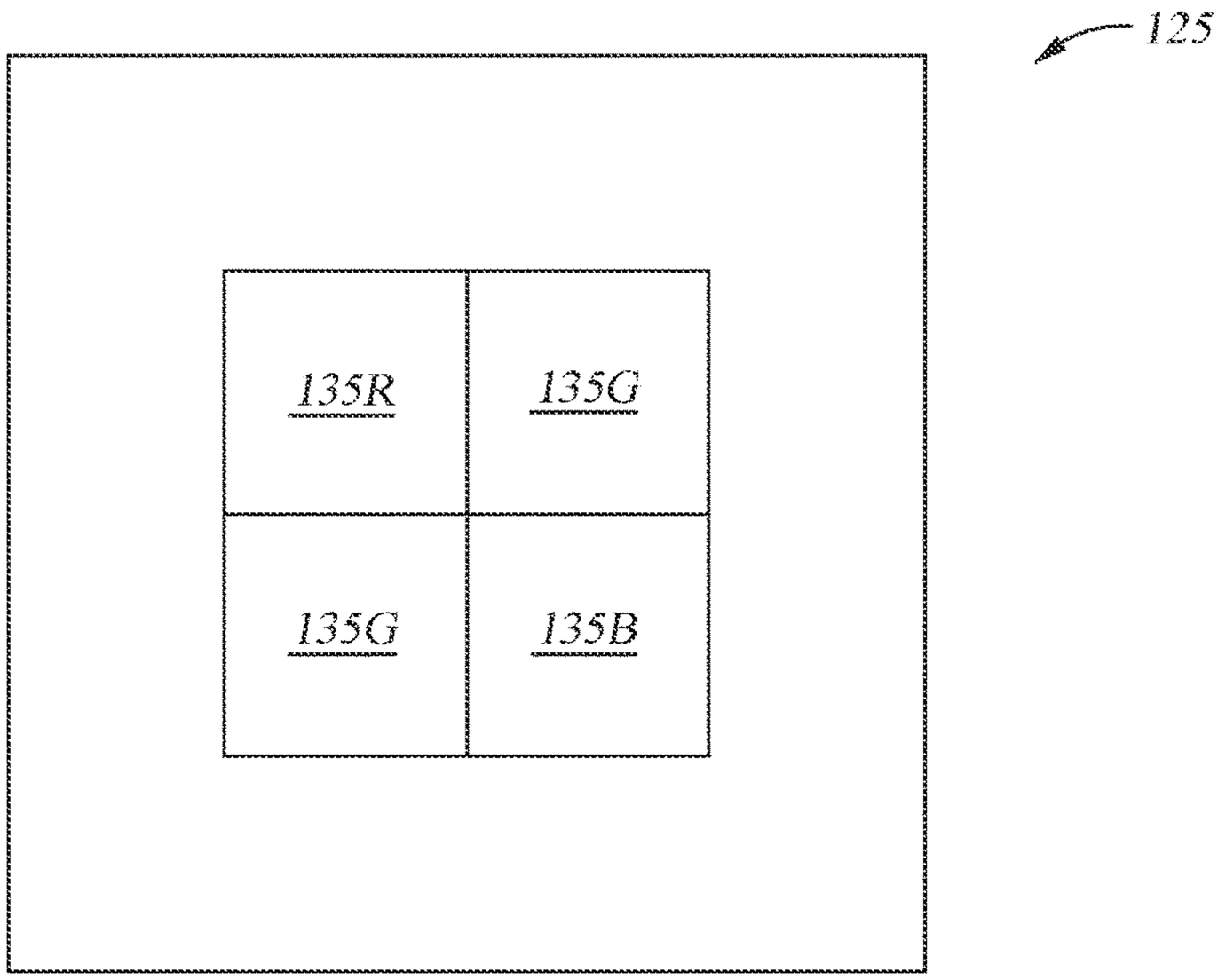

Fig. 2B

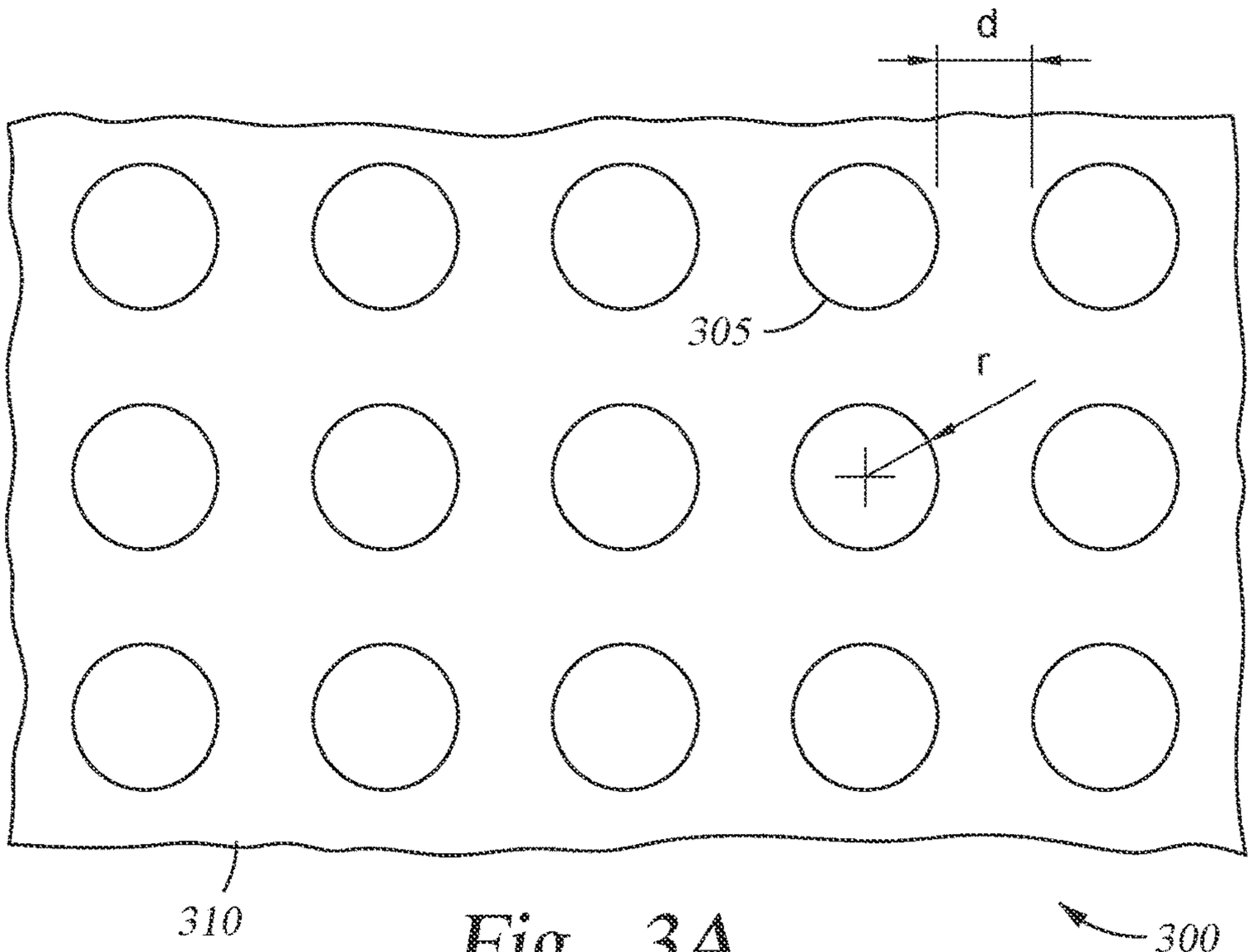

Fig. 3A

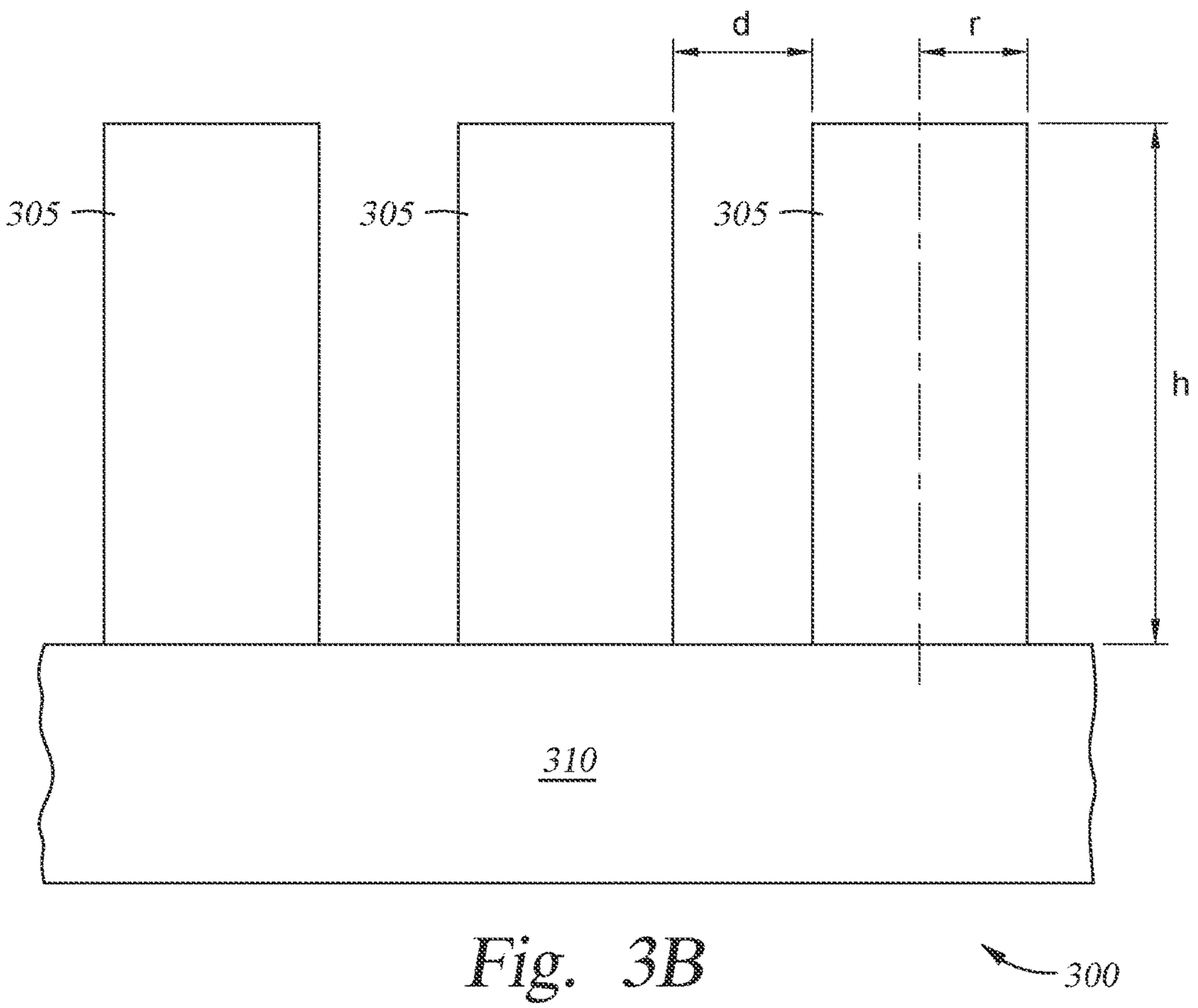

Fig. 3B

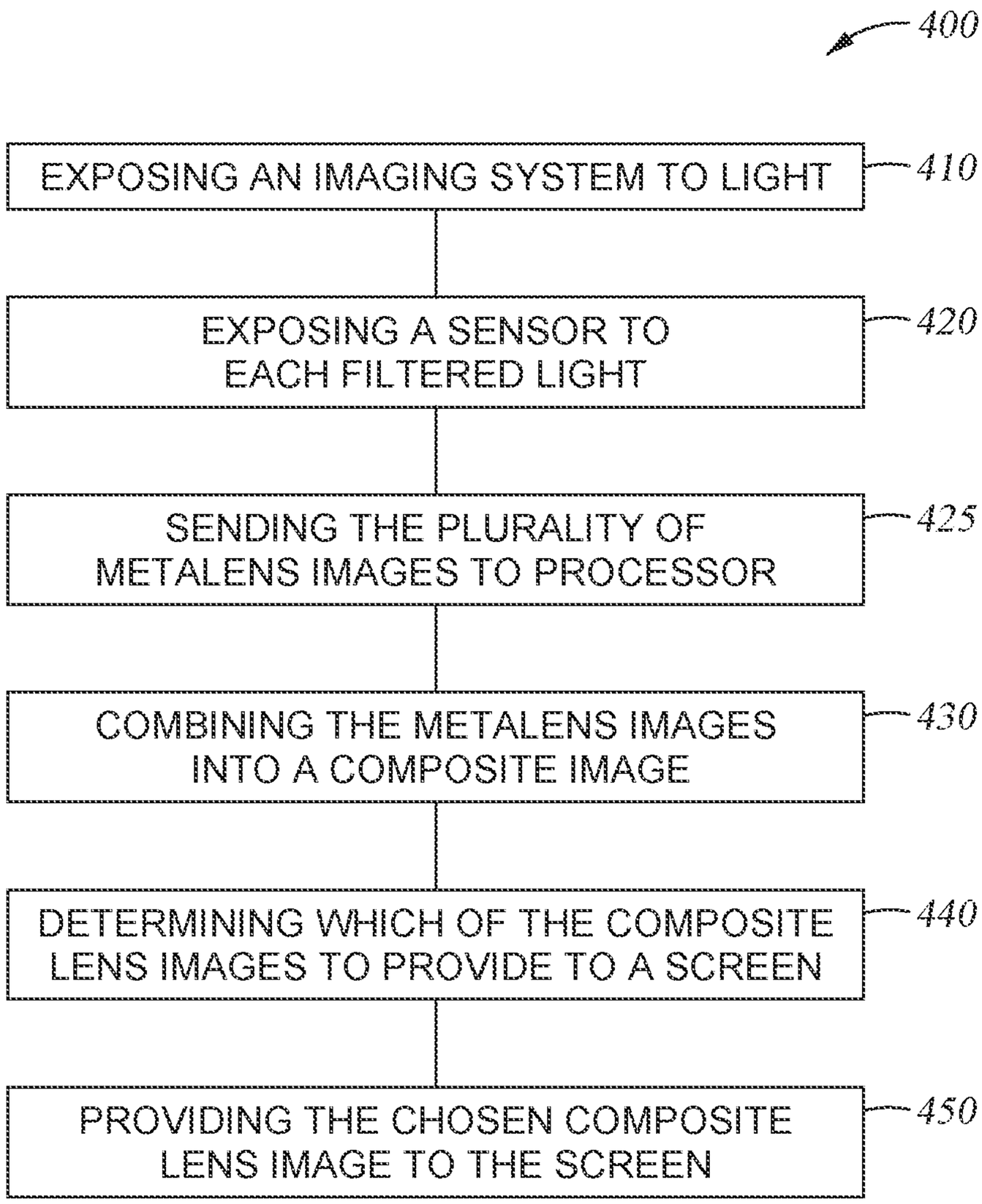
400
EXPOSING AN IMAGING SYSTEM TO LIGHT
410
EXPOSING A SENSOR TO EACH FILTERED LIGHT
420
SENDING THE PLURALITY OF METALENS IMAGES TO PROCESSOR
425
COMBINING THE METALENS IMAGES INTO A COMPOSITE IMAGE
430
DETERMINING WHICH OF THE COMPOSITE LENS IMAGES TO PROVIDE TO A SCREEN
440
PROVIDING THE CHOSEN COMPOSITE LENS IMAGE TO THE SCREEN
450

Fig. 4

IMAGING SYSTEM AND METHOD OF CREATING COMPOSITE IMAGES

CROSS-REFERENCE TO RELATED APPLICATIONS

This Application is a continuation of and hereby claims priority under 35 U.S.C. § 120 to pending U.S. patent application Ser. No. 16/859,708, filed Apr. 27, 2020, which claims priority to U.S. Provisional Application 62/858,258, the contents of which are incorporated herein in their entirety.

BACKGROUND

Field

Embodiments of the invention relate to an apparatus and a method and, more specifically, to an imaging system and method of creating composite images.

Description of the Related Art

Imaging systems used to take pictures are common in the art, with varied applications, including cameras and scanners. Imaging systems typically contain multiples lenses, composite lenses, and films, in order to reduce aberrations caused by imperfections in lenses. The refractive index of most transparent materials decreases with increasing wavelength. Since the focal length of a lens depends on the refractive index, this variation in refractive index affects focusing, resulting in chromatic aberrations. Lenses with chromatic aberrations cause "fringes" of color along boundaries that separate dark and bright parts of images.

In order to combat chromatic aberrations, composite lenses with multiple layers of lenses are often used, to minimize or hopefully entirely remove chromatic aberrations in the image. However, composite lenses include multiple lenses stacked vertically, and thus are often bulky, causing lens extrusion problems for smartphones and other devices. In addition, conventional infrared (IR) lenses have limited material choices, due to the low refractive index of commonly used materials.

Metalenses are much smaller than traditional lenses and composite lenses (sizes on the microscale or nanoscale, with thickness often smaller than 1 μm), and show promise for replacing conventional lenses in a variety of imaging applications. Metalens fabrication is also compatible with conventional semiconductor manufacturing. One drawback of metalenses is that they also suffer from chromatic aberrations even more severely than in conventional lenses. Metalenses are typically useful only for extremely narrow wavelengths of light, so they are unable to be used for full color images.

Therefore, there is a need for an apparatus and method that can utilize metalenses over a wide range of light wavelengths.

SUMMARY

In one embodiment, an imaging system is provided, including one or more lens assemblies, each lens assembly including a plurality of metalens filter systems, including a plurality of metalenses, and a plurality of color filters, each color filter coupled to one of the plurality of metalenses, with the central pass-through wavelengths of the color filter being the same as the working wavelengths of the corresponding metalens, and a plurality of sensors, each sensor coupled to a metalens filter system, and a controller comprising a processor configured to combine a metalens image from each of the plurality of metalenses into a composite image.

In another embodiment, an imaging system is provided, including one or more lens assemblies, each lens assembly including a plurality of metalens filter systems, including a plurality of metalenses, and a plurality of color filters, each color filter coupled to one of the plurality of metalenses, with the central pass-through wavelengths of the color filter being the same as the working wavelengths of the corresponding metalens, and a plurality of sensors, each sensor coupled to a metalens filter system, and a controller comprising a processor configured to combine a metalens image from each of the plurality of metalenses into a composite image. The plurality of metalens filter systems include at least one red metalens filter system, at least one green metalens filter system, and at least one blue metalens filter system.

In another embodiment, an imaging system is provided, including one or more lens assemblies, each lens assembly including a focusing lens, and a metalens assembly including a plurality of metalenses, a sensor coupled to the one or more lens assemblies, and a controller including a processor configured to combine a metalens image from each of the plurality of metalenses into a composite image. The plurality of metalenses include at least one red metalens, at least one green metalens, and at least one blue metalens.

In another embodiment, a method of creating one or more composite images is provided, including exposing an imaging system comprising one or more lens assemblies to light, wherein each lens assembly includes a plurality of metalens filter systems, including a plurality of metalenses, and a plurality of color filters, each color filter coupled to one of the plurality of metalenses, with the central pass-through wavelengths of the color filter being the same as the working wavelengths of the corresponding metalens, the plurality of metalens filter systems comprises at least one red metalens with a red color filter, at least one green metalens with a green color filter, and at least one blue metalens with a blue color filter, and a plurality of sensors, each sensor coupled to a metalens filter system, wherein the light passes through the plurality of metalenses filter systems such that each of the plurality of metalenses filter systems creates a metalens image, exposing a plurality of sensors to each of the plurality of metalens images, the sensor coupled to the metalens filter systems, sending the plurality of metalens images to a processor, and combining the plurality of metalens images into the one or more composite images using the processor.

The imaging system mitigates any chromatic aberrations caused by the metalenses because each of the metalenses focuses light into a different wavelength range, creating a separate metalens image. The metalens images are combined into a composite image, and thus chromatic aberrations in the final image are reduced.

BRIEF DESCRIPTION OF THE DRAWINGS

So that the manner in which the above-recited features of the present disclosure can be understood in detail, a more particular description of the embodiments, briefly summarized above, may be had by reference to embodiments, some of which are illustrated in the appended drawings. It is to be noted, however, that the appended drawings illustrate only typical embodiments of this disclosure and are therefore not

to be considered limiting of its scope, for the disclosure may admit to other equally effective embodiments.

FIG. **1**A illustrates an imaging system, according to one embodiment.

FIGS. **1**B-E illustrate arrangements of one or more lens assemblies, according to some embodiments.

FIGS. **2**A and **2**B illustrate arrangements of metalens filter systems, according to some embodiments.

FIG. **3**A illustrates an overhead view of a portion of a plurality of metalens features, according to one embodiment.

FIG. **3**B illustrates a side view of a portion of a plurality of metalens features, according to one embodiment.

FIG. **4** is a flow diagram of method operations for creating a composite image, according to one embodiment.

To facilitate understanding, identical reference numerals have been used, where possible, to designate identical elements that are common to the figures. It is contemplated that elements and features of one embodiment may be beneficially incorporated in other embodiments without further recitation.

DETAILED DESCRIPTION

Embodiments of the disclosure provided herein include an imaging system using one or more lens assemblies, and a method of creating one or more composite images. An imaging system is exposed to light reflected from an object, and the light is filtered through a plurality of metalens filter systems. Metalens images, which are created from focused light in specific narrow wavelengths at a plurality of sensors, are then combined into composite images. The resulting composite images are substantially free from chromatic aberrations. Embodiments of the disclosure provided herein may be especially useful for, but are not limited to, imaging systems used for, and methods of, creating composite images using metalenses.

As used herein, the term "about" refers to a +/−10% variation from the nominal value. It is to be understood that such a variation can be included in any value provided herein.

FIG. **1**A illustrates an imaging system **100**, according to one embodiment. As shown, the imaging system **100** includes a controller **190**, and one or more lens assemblies **125**. As shown, the one or more lens assemblies **125** include a base **121**, a plurality of metalens filter systems **135**, and a plurality of sensors **140**. The lens assemblies **125** can have a width of about 100 μm to about 15 mm. The width between lens assemblies **125** can vary with the application. For example, the width between lens assemblies **125** can be modified to take a traditional two-dimensional image, or the width can be increased to take a three-dimensional or stereoscopic image.

Although parts of the disclosure describe exposing the imaging system **100** to white light, it is understood that this is an example, and the imaging system **100** can be exposed to any spectrum of light, including but not limited to, white light, visible light, or pre-filtered light.

The metalens filter systems **135** are disposed in the base **121**. As shown, the metalens filter systems **135** include a metalens **120** and a color filter **122**. The metalens **120** focuses light of a certain wavelength at a chosen focal length of the metalens. The color filter **122** is disposed below the metalens **120**. The central pass-through wavelengths of the color filter **122** is the same as the working wavelengths of the corresponding metalens **120**. For example, a red metalens **120**R with a focal length of about 1 cm focuses red light at a distance of about 1 cm from the metalens **120**R. The red color filter **122**R then filters non-red light from the image created by the red metalens **120**R, and this filtered image is incident on the sensor **140**R, resulting in a metalens image sensed by the sensor, where the metalens image includes mostly red light from the original object. An adjacent green metalens **120**G with the same focal length as the red metalens **120**R focuses green light at a distance of about 1 cm from the metalens **120**G. The green color filter **122**G then filters non-green light from the image created by the green metalens **120**G, and this filtered image is incident on the sensor **140**G, resulting in a metalens image sensed by the sensor, where the metalens image includes mostly green light from the original object. The metalens images are then combined to make a composite image, which is described in more detail below. The result is that the each lens assembly **125** has a single focal length that may be different from that of the other lens assemblies **125**, **125'**.

Although FIG. **1**A shows the white light incident on the metalens **120** before the focused light is focused onto the color filter **122**, the color filter can be placed in front of the metalens, such that the white light is filtered by the color filter before the filtered light is incident on the metalens **120**. The color filter **122** can be any of those used in the art, such as a Bayer filter. The color filter **122** can also itself be a metalens or metasurface. In addition, the metalens **120** can include stacks of individual metalenses, grown with transparent substrates in between, such as glass or plastic.

The one or more lens assemblies **125**, **125'** have different focal lengths, and the lens assemblies make up a varifocal lens system, according to some embodiments. The focal length of the lens assembly **125** can vary from about 0.5 mm to about 2000 mm. The different focal lengths allows for the imaging system **100** to accurately image objects at variety of distances. For example, the lens assembly **125** has a focal length of about 0.5 mm, allowing for imaging objects very close to the imaging system **100**, and the lens assembly **125'** has a focal length of 2000 mm, allowing for imaging objects very far from the imaging system **100**.

FIGS. **1**B-E illustrate arrangements of one or more lens assemblies **125**, according to some embodiments. FIG. **1**B shows an imaging system **100** with one lens assembly **125**. FIG. **1**C shows an imaging system **100** with two lens assemblies **125**. FIG. **1**D shows an imaging system **100** with four lens assemblies **125** in a 2×2 grid. FIG. **1**E shows an imaging system **100** with n×n' lens assemblies **125**, where n and n' are any integer. n and n' can be the same number, or different numbers. The lens assemblies **125** can be arranged in any suitable pattern, such as, but not limited to, a grid, as shown in FIG. **1**D, a spiral, a circle, or any other suitable shape, depending on the application. There are four lens assemblies **125** that are arranged in a grid as shown in FIG. **1**C, according to one embodiment. In a grid, the lens assemblies **125** can have a separation a in the y direction, and a separation b in the x direction. The separation a and the separation b can be the same or different. The lens assemblies **125** can be separated by about 500 μm to about 10 cm, depending on the purpose of the imaging system **100**. For example, for single image capture, the lens assemblies **125** can be separated by about 500 μm to about 3 cm. For multi-image capture, the lens assemblies **125** can be separated by about 3 cm to about 15 cm.

FIGS. **2**A and **2**B illustrate arrangements of the metalens filter systems **135**, according to some embodiments. The metalens filter systems **135** include at least one red metalens filter system **135**R, at least one green metalens filter system **135**G, and at least one blue metalens filter system **135**B, wherein, for example, the green metalens filter system

includes a green metalens **120**G and a green color filter **122**G. The metalens filter systems **135** includes at least two green metalens filter systems **135**G, according to one embodiment. The red metalens filter system **135**R filters white light to leave red light at a wavelength of about 600 nm to about 700 nm, the green metalens filter system **135**G filters white light to leave green light at a wavelength of about 500 nm to about 560 nm, and the blue metalens filter system **135**B filters white light to leave blue light at a wavelength of about 440 nm to about 490 nm.

FIG. **2**A shows red metalens filter system **135**R, green metalens filter system **135**G, and blue metalens filters system **135**B. The green metalens filter system **135**G is placed between the red metalens filter system **135**R and the blue metalens filter system **135**B. By arranging the metalenses filter systems **135** in this arrangement, the total area of the metalens filter systems can be reduced, allowing for reduction in size of the lens assembly **125**.

FIG. **2**B shows a red metalens filter system **135**R, two green metalenses filter systems **135**G, and a blue metalens filter system **135**B. In the illustrated arrangement, the four metalenses filter systems **135** are arranged in a grid, the red metalens filter system **135**R is disposed adjacent to two green metalens filter systems **135**G, and the blue metalens filter system **135**B is disposed adjacent to two green metalens filter systems **135**G, according to one embodiment. Metalens filter systems **135** arranged as shown in FIG. **2**B can be used in order to achieve a higher luminance resolution than chrominance resolution.

Although FIGS. **2**A and **2**B show metalens filter systems **135** for red, green, and blue, any color metalens filter systems can be placed in the lens assembly **120**. In addition, it is contemplated that metalens filter systems **135** for nonvisible light, such as IR and UV, could be used as well.

FIG. **3**A illustrates an overhead view of a portion **300** of a plurality of metalens features **305**, according to one embodiment. The metalens **120** includes repeated patterns of the metalens features **305**. The metalens features **305** are nanosized columns grown on a substrate **310**. The metalens features **305** have differing shapes depending on the desired spectrum of light to filter. The metalens features **305** can be substantially circular, triangular, square, rectangular, or have an uneven shape. The metalens features **305** can be made from any suitable high refractive index material, such as, but not limited to, silicon, silicon oxide, silicon nitride, titanium, titanium oxide, tantalum oxide, zirconium oxide, hafnium oxide, gallium arsenide, gallium nitride, and niobium oxide. The substrate **310** can be any typical transparent substrate, such as glass. The substrate **310** can include any number of layers disposed thereon.

FIG. **3**B illustrates a side view of a portion **300** of a plurality of metalens features **305**, according to one embodiment. The metalens features **305** have a radius of r, which is from about 20 nm to about 500 nm. The metalens features **305** have a height of h, which is from about 10 nm to about 2 μm. The metalens features **305** are separated from each other by a separation distance d, which is from about 30 nm to about 500 nm. The radius, height, shape, material, and feature separation distance of the metalens features **305** are selected to create metalenses **120** that filters out all but a narrow wavelength band of light. For example, when the white light is incident onto the red metalens **120**R, the red metalens **120**R focuses the red light only.

In one embodiment, the metalens **120**R, **120**G, **120**B have metalens features **305** with circular or elliptical shaped columns, the columns containing silicon dioxide (SiO_2), silicon (Si), titanium dioxide (TiO_2), titanium (Ti), or gallium nitride (GaN) material, the columns having a radius of about 30 nm to 500 nm, the columns having a height of about 10 nm to 2 um, and the columns having a separation of about 30 nm to 500 nm.

Referring back to FIG. **1**A, the metalens filter systems **135** send filtered metalens image of the red, green, or blue light filtered by the metalens filter system, depending on the metalens filter system in question, to the corresponding sensor **140**. The sensor **140** is any sensor that can receive and decode light information, such as a photosensor. The sensor **140** sends the metalens images to the controller **190**.

The controller **190**, such as a programmable computer, is connected to the sensor **140** by sensor connectors **141** to process the metalens images sent from the lens assemblies **125**. The sensor connector **141** can be any kind of data connection, such as, but not limited to, a wire, fiber optic, or wireless connection, such as radio wireless local area networking (LAN), Wi-Fi, ultrahigh frequency (UHF) radio waves, or BLUETOOTH®. As shown, the controller **190** includes a processor, or central processing unit (CPU) **192**, a memory **194**, and support circuits **196**, e.g., input/output circuitry, power supplies, clock circuits, cache, and the like. The memory **194** is connected to the CPU **192**. The memory **194** is a non-transitory computer readable medium, and can be one or more readily available memory such as random access memory (RAM), read only memory (ROM), floppy disk, hard disk, or other form of digital storage. In addition, although illustrated as a single computer, the controller **190** could be a distributed system, e.g., including multiple independently operating processors and memories. This architecture is adaptable to various embodiments of imaging system **100** based on programming of the controller **190** to accept and analyze images sent from the sensor **140**, such as metalens images.

The processor **192** combines the metalens images to make a composite image. The processor **192** uses any standard algorithm for this task, such as alpha compositing or image stitching. The processor **192** uses an image stitching algorithm, according to one embodiment. In the example given above, the metalens filter systems **135** are red, green, and blue, and the composite image is formed from the red-green-blue (RGB) color model. However, any appropriate set of metalens filter systems **135** can be used with an appropriate color model, such as, for example, cyan, magenta, and yellow metalenses, and the cyan-magenta-yellow (CMY) color model can be used to make the composite image. The combination of the metalens images by the processor **192** allows for a composite image with reduced chromatic aberrations.

Thus, the processor **192** takes the metalens images and combines them into a full color composite image, and the processor sends the composite image to a screen **180** via the screen connector **181**. The screen connector **181** can be any kind of data connection, such as, but not limited to, a wire, fiber optic, or wireless connection, such as Wi-Fi or BLUETOOTH®. The screen **180** can be any kind of suitable display, such as a monitor or television. The screen **180** can have any resolution, such as standard definition, high definition (HD), or ultrahigh definition (UHD). The screen **180** can be a liquid-crystal display (LCD), light-emitting diode (LED) display, organic LED (OLED) display, and the like. If the imaging system **100** is part of a camera, the screen **180** can be part of the camera for viewing of the picture taken by the user. If the imaging system **100** is part of a smartphone or other cellular phone, the screen **180** can be part of the screen of the phone, or be the screen of the phone.

The metalens images are focused on a very specific wavelength of light (red, green, blue, etc.), and other wavelengths other than the designed ones are filtered by the metalens filter systems **135**, and thus chromatic aberrations in the metalens images are reduced. When the composite image is created by the combination of the metalens images, chromatic aberrations in the composite image are minimized.

It is to be noted that each lens assembly **125** can provide a separate composite image, as each lens assembly can have a different focal length, and thus each composite image will be different. For example, an image taken of an object that is close by the lens assembly **125** with a short focal length will be substantially more in focus than an image taken by a lens assembly **125'** with a very long focal length. In this case, the processor **192** is configured to send each of the composite images to the screen **180**, where the user can pick and choose which image to save. The processor **192** can contain algorithms on how to choose the best quality composite image to provide to the screen, such as which composite image is in focus. The processor **192** determines which of the composite images to provide to the screen **180**; and the processor provides the chosen composite image to the screen, according to one embodiment. The processor **192** can also be configured to combine two composite images to make at third composite image. For example, if one of the composite images is produced with a near focus, and another one of the composite images is produced with a far focus, the two composite images can be combine into a third composite image with full depth of field. In this case, the imaging system **100** can be used in a light-field imaging system, wherein the intensity of light in a scene, and also the direction that the light rays are traveling in space, can both be accounted for.

The imaging system **100** as described is useful for applications where the size of the lenses must be small. For example, the imaging system **100** can be used in a wearable device, such as a smart watch, or in a smartphone. The metalens filter systems **135** saves design spaces for large field of view, numerical apertures, and high efficiency optimization for metalens cameras.

FIG. **4** is a flow diagram of method operations **400** for creating a composite image, according to one embodiment. Although the method steps are described in conjunction with FIGS. **1**A-E and **4**, persons skilled in the art will understand that any system configured to perform the method steps, in any order, falls within the scope of the embodiments described herein.

The method begins at operation **410**, where the imaging system **100**, including one or more lens assemblies **125**, is exposed to light. The one or more lens assemblies **125** are exposed to light reflected from an object, and the light is incident on the metalens filter systems **135** below. When the light is focused by the metalenses **120** in the metalens filter system **135**, the focused light is passed through the color filter **122**, resulting in filtered light of one color. For example, the red metalens filter system **135**R creates filtered red light only.

At operation **420**, each sensor **140** is exposed the filtered light to create each of the metalens images.

At operation **425**, each sensor **140** sends its corresponding metalens images for each metalens filter system **135** to the processor **192** by the sensor connectors **141**.

At operation **430**, the processor **192** combines the plurality of metalens images into a composite image. The composite image can be made by any of the algorithms described above. The composite image is created by an image stitching algorithm, according to one embodiment. For example, if there are two lens assemblies **125**, and each lens assembly includes three metalens filter systems **135** then a total of six metalens images will be combined by the processor **192**, with two sets of three metalens images combined into two composite images.

In some embodiments, at optional operation **440**, the imaging system **100** includes two or more lens assemblies **125**, **125'**, wherein lens assemblies have different focal lengths, the lens assemblies make up a varifocal lens system, and the processor **192** decides which of the composite images to provide to the screen **180**. For example, an image taken of an object that is close by the lens assembly **125** with a short focal length will be substantially more in focus than an image taken by a lens assembly **125'** with a very long focal length. The processor **192** can contain algorithms on how to choose the best quality image to provide to the screen, such as which image is in focus.

At operation **450**, the processor **192** provides the one or more composite images to the screen **180** via the screen connector **181**. The processor **192** can provide all of the one or more composite images to the screen **180**, where the user can select which of the composite images to save. As described above, the processor **192** can automatically determine which of the composite images to the screen. The processor **192** can also be configured to combine two composite images to make at third composite image. For example, if one of the composite images is produced with a near focus, and another one of the composite images is produced with a near focus, the two composite images can be combine into a third composite image with full depth of field. In this case, the imaging system **100** can be used in a light-field imaging system, wherein the intensity of light in a scene, and also the direction that the light rays are traveling in space can both be accounted for.

As described above, the imaging system **100** includes one or more lens assemblies **125** coupled to the processor **192**. When reflected light from an object enters the lens assemblies **125**, the metalens filter systems **135** filter light incident on sensors **140**. Each metalens filter system **135** focuses the light into a specific wavelength, creating the metalens images at the sensors **140**. The metalens images are sent to the processor **192**, wherein the processor combines the metalens images into one or more composite images. The processor **192** sends the one or more composite images to the screen **180**.

The imaging system **100** as described mitigates any chromatic aberrations caused by the metalenses **120** because each of the metalenses focuses a different wavelength of light. The metalens images are combined into a composite image, and the composite image has reduced chromatic aberrations. The lens assemblies **125** can be made smaller than traditional lenses. In addition, the lens assemblies **125** do not require multiple composite lenses, and thus the bulk of the lens assemblies can be minimized.

While the foregoing is directed to implementations of the present invention, other and further implementations of the invention may be devised without departing from the basic scope thereof, and the scope thereof is determined by the claims that follow.

We claim:

1. An imaging system, comprising:

two or more lens assemblies, each lens assembly comprising:

a plurality of metalens filter systems comprising a plurality of metalenses; and

a controller comprising a processor configured to:

combine a metalens image from each of the plurality of metalenses of each lens assembly into a first composite image from a first lens assembly and a second composite image from a second lens assembly; and

determine at least one composite image of a plurality of composite images to provide to a screen of the imaging system, wherein the plurality of composite images includes the first composite image, the second composite image, and a third composite image formed by combining the first composite image and the second composite image.

2. The imaging system of claim **1**, wherein the plurality of metalens filter systems comprises at least one red metalens filter system, at least one green metalens filter system, and at least one blue metalens filter system.

3. The imaging system of claim **2**, wherein the plurality of metalens filter systems comprise at least two green metalens filter systems.

4. The imaging system of claim **3**, wherein the plurality of metalens filter systems are arranged in a grid, one of the at least one red metalens filter system is disposed adjacent to two green metalenses filter systems, and one of the at least one blue metalens filter systems is disposed adjacent to two green metalenses filter systems.

5. The imaging system of claim **1**, wherein the two or more lens assemblies are arranged in a grid.

6. The imaging system of claim **5**, wherein the two or more lens assemblies are four in number, and the lens assemblies are arranged in a 2×2 grid.

7. The imaging system of claim **1**, wherein each of the two or more lens assemblies has a different focal length, and each of the plurality of metalens filter systems further comprise:

a plurality of color filters, each color filter corresponding to one of the plurality of metalenses, with the central pass-through wavelengths of the color filter being the same as the working wavelengths of the corresponding metalens; and

a plurality of sensors, each sensor coupled to a metalens filter system.

8. An imaging system, comprising:

two or more lens assemblies comprising:

a plurality of metalens filter systems each comprising a plurality of metalenses, wherein the plurality of metalens filter systems comprise at least one red metalens filter system, at least one green metalens filter system, and at least one blue metalens filter system;

a controller comprising a processor configured to:

combine a metalens image from each of the plurality of metalenses of each lens assembly into a first composite image from a first lens assembly and a second composite image from a second lens assembly; and

determine at least one composite image of a plurality of composite images to provide to a screen of the imaging system, wherein the plurality of composite images includes the first composite image, the second composite image, and a third composite image formed by combining the first composite image and the second composite image.

9. The imaging system of claim **8**, wherein the plurality of metalens filter systems comprise at least two green metalens filter systems.

10. The imaging system of claim **9**, wherein the plurality of metalens filter systems are arranged in a grid, one of the at least one red metalens filter system is disposed adjacent to two green metalenses filter systems, and one of the at least one blue metalens filter systems is disposed adjacent to two green metalenses filter systems.

11. The imaging system of claim **8**, wherein the two or more lens assemblies are arranged in a grid.

12. The imaging system of claim **11**, wherein the two or more lens assemblies are four in number, and the lens assemblies are arranged in a 2×2 grid.

13. The imaging system of claim **8**, wherein each of the two or more lens assemblies has a different focal length, and each of the plurality of metalens filter systems further comprise:

a plurality of color filters, each color filter corresponding to one of the plurality of metalenses, with the central pass-through wavelengths of the color filter being the same as the working wavelengths of the corresponding metalens; and

a plurality of sensors, each sensor coupled to a metalens filter system.

14. A method of creating one or more composite images, comprising:

exposing an imaging system comprising two or more lens assemblies to light, each lens assembly comprising a plurality of metalens filter systems that each comprise a plurality of metalenses;

creating a plurality of metalens images from light passing through each of the plurality of metalenses;

sending the plurality of metalens images to a processor;

combining the plurality of metalens images of each lens assembly into a first composite image from a first lens assembly and a second composite image from a second lens assembly using the processor; and

determining at least one composite image of a plurality of composite images to provide to a screen of the imaging system, wherein the plurality of composite images includes the first composite image, the second composite image, and a third composite image formed by combining the first composite image and the second composite image.

15. The method of claim **14**, wherein the plurality of metalens filter systems comprises at least one red metalens filter system, at least one green metalens filter system, and at least one blue metalens filter system.

16. The method of claim **14**, wherein the two or more lens assemblies are arranged in a grid.

17. The method of claim **16**, wherein the two or more lens assemblies are four in number, and the lens assemblies are arranged in a 2×2 grid.

18. The method of claim **14**, wherein each of the two or more lens assemblies has a different focal length, and each of the plurality of metalens filter systems further comprise:

a plurality of color filters, each color filter coupled to one of the plurality of metalenses, with the central pass-through wavelengths of the color filter being the same as the working wavelengths of the corresponding metalens, the plurality of metalens filter systems comprising at least one red metalens with a red color filter, at least one green metalens with a green color filter, and at least one blue metalens with a blue color filter; and

a plurality of sensors, each sensor coupled to a metalens filter system, wherein the light passes through the plurality of metalenses filter systems such that each of the plurality of metalenses filter systems creates a metalens image.

19. The method of claim **14**, wherein the plurality of metalens filter systems comprise at least two green metalens filter systems.

20. The method of claim **14**, wherein the one or more composite images are created using an image stitching algorithm.

* * * * *