US012050327B2

(12) **United States Patent**
Fu et al.

(10) **Patent No.: US 12,050,327 B2**
(45) **Date of Patent: Jul. 30, 2024**

(54) **IMAGING SYSTEM AND METHOD OF MANUFACTURING A METALENS ARRAY**

(71) Applicant: **Applied Materials, Inc.**, Santa Clara, CA (US)

(72) Inventors: **Jinxin Fu**, Fremont, CA (US); **Tapashree Roy**, Bangalore (IN); **Ludovic Godet**, Sunnyvale, CA (US); **Wayne McMillan**, San Jose, CA (US); **Robert J Visser**, Menlo Park, CA (US)

(73) Assignee: **Applied Materials, Inc.**, Santa Clara, CA (US)

(*) Notice: Subject to any disclaimer, the term of this patent is extended or adjusted under 35 U.S.C. 154(b) by 215 days.

(21) Appl. No.: **16/537,326**

(22) Filed: **Aug. 9, 2019**

(65) **Prior Publication Data**

US 2020/0393599 A1 Dec. 17, 2020

(30) **Foreign Application Priority Data**

Jun. 14, 2019 (IN) 201941022140

(51) **Int. Cl.**
G02B 3/00 (2006.01)
G02B 27/01 (2006.01)

(52) **U.S. Cl.**
CPC ***G02B 3/0068*** (2013.01); ***G02B 3/0012*** (2013.01); ***G02B 27/0172*** (2013.01)

(58) **Field of Classification Search**
CPC G02B 3/0068; G02B 3/0012; G02B 27/0172; G02B 27/30; G02B 1/002; G02B 5/1861; G02B 2027/0178
See application file for complete search history.

(56) **References Cited**

U.S. PATENT DOCUMENTS

7,019,890	B2	3/2006	Meredith et al.
7,115,525	B2	10/2006	Abatchev et al.
7,366,351	B2	4/2008	Walmsley et al.
8,189,263	B1	5/2012	Wang et al.
8,715,516	B2	5/2014	Sakamoto et al.
9,151,891	B2	10/2015	Ma et al.

(Continued)

FOREIGN PATENT DOCUMENTS

CN	109196387 A	1/2019
CN	109343219 A	2/2019

(Continued)

OTHER PUBLICATIONS

International Search Report/Written Opinion issued in PCT/US2020/033604 on Sep. 1, 2020.

(Continued)

Primary Examiner — Alicia M Harrington
(74) *Attorney, Agent, or Firm* — Patterson + Sheridan, LLP

(57) **ABSTRACT**

An imaging system and a method of manufacturing a metalens array is provided. The imaging system includes a metalens array, and light scattered from an object is split by the metalens array, such that an image is formed in front of an observer. The metalens array is at least partially transparent to visible light, so that the observer can also see the environment. The method of manufacturing the metalens array includes bonding together a plurality of substrates, and dicing the plurality of substrates into metalens arrays. The metalens arrays can be used in the imaging system.

20 Claims, 5 Drawing Sheets

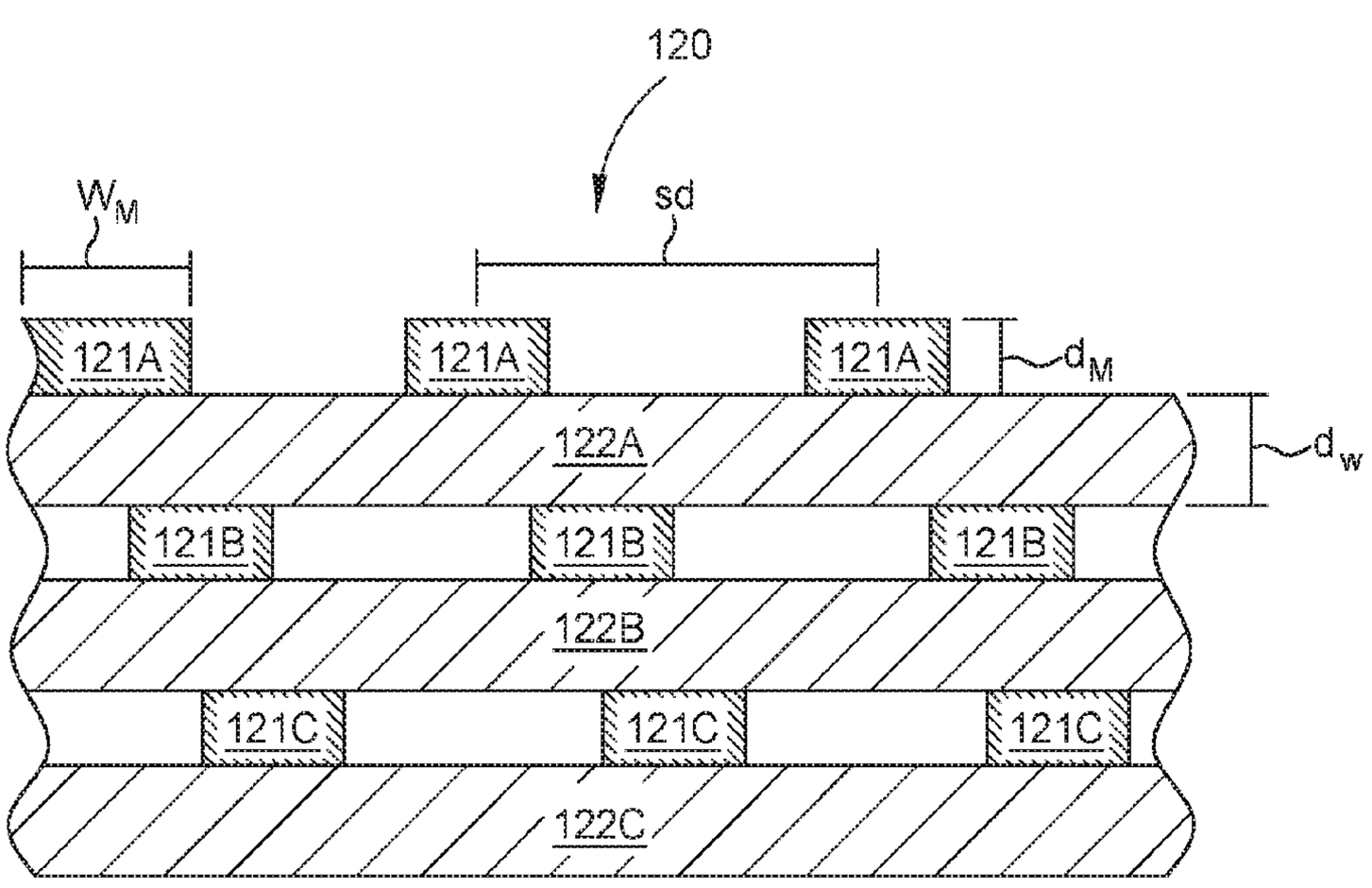

(56) **References Cited**

U.S. PATENT DOCUMENTS

9,190,736	B1 *	11/2015	Burckel	H01L 51/0008
9,298,060	B2	3/2016	Shen et al.	
9,946,075	B1	4/2018	Hu	
10,761,328	B2 *	9/2020	Hu	G02B 27/0172
2002/0044345	A1	4/2002	Takeuchi et al.	
2004/0190338	A1	9/2004	Lee	
2005/0233487	A1	10/2005	Liu et al.	
2012/0183288	A1 *	7/2012	Kishinami	G02B 13/0085 396/505
2012/0314991	A1	12/2012	Kang et al.	
2014/0241661	A1	8/2014	Chen et al.	
2015/0219806	A1	8/2015	Arbabi et al.	
2016/0252727	A1	9/2016	Mack et al.	
2018/0172988	A1 *	6/2018	Ahmed	H01L 33/58
2018/0188542	A1 *	7/2018	Waldern	G02B 27/0172
2018/0217186	A1	8/2018	Pfefferlein et al.	
2018/0231702	A1	8/2018	Lin et al.	
2018/0284428	A1	10/2018	Guenter	
2018/0292676	A1	10/2018	Alexander	
2018/0306425	A1	10/2018	Massmann et al.	
2018/0337743	A1	11/2018	Jou et al.	
2019/0086683	A1	3/2019	Aieta et al.	
2019/0121004	A1	4/2019	Ahmed et al.	
2019/0137762	A1	5/2019	Hu	
2019/0137777	A1	5/2019	Yang et al.	
2019/0146151	A1	5/2019	Meister et al.	
2019/0154877	A1	5/2019	Capasso et al.	
2020/0011514	A1	1/2020	Fu	
2020/0249429	A1 *	8/2020	Han	G02B 5/1895
2020/0284960	A1 *	9/2020	Ellenbogen	G02B 5/20
2021/0028215	A1 *	1/2021	Devlin	H01L 27/14621

FOREIGN PATENT DOCUMENTS

CN	109799611	A	5/2019
JP	H11248989	A	9/1999
JP	2010504631	A	2/2010
JP	2020047874	A	3/2020
JP	2018528446	A	10/2020
KR	1020110070571	A	6/2011
KR	1020190052544	A	5/2019
TW	200741328	A	11/2007
WO	2016168173	A1	10/2016
WO	2018142339	A1	8/2018
WO	2018204856	A1	11/2018
WO	2018210776	A1	11/2018
WO	2019062480	A1	4/2019
WO	2019067912	A	4/2019

OTHER PUBLICATIONS

Composite functional metasurfaces for multispectral achromatic optics, Avayu et al., Nature Communications 8, 14992 (2017).
Achromatic metalens over 60 nm bandwidth in the visible and metalens with reverse chromatic dispersion, Khoraseninejad et al., Nano Letters 17, 1819 (2017).
GaN metalens for pixel-level full-cover routing at visible light, Chen et al., Nano Letters 27, 6345 (2017).
Technology, www.light.co/technology <http://www.light.co/technology>, retrieved Apr. 9, 2019.
A broadband achromatic metalens for focusing and imaging in the visible, Chen et al., Nature Nanotechnology 13, 220 (2018).
Broadband high-efficiency dielectric metasurfaces for the visible spectrum, Devlin et al., Proceedings of the National Academy of Sciences 13, 10473 (2016).
Multiwavelength achromatic metasurfaces by dispersive phase compensation, Aieta et al., Science 347, 1342 (2015).
Dynamic metasurface lens based on MEMS technology, Roy et al., APL Photonics 3, 021302 (2018).
Letinar Technology, <https://letinar.com/technology/>, retrieved May 21, 2019.
Metasurface eyepiece for augmented reality, Lee et al., Nature Communications 9, 4562 (2018).
International Search Report and Written Opinion for PCT/US2020/033428 dated Oct. 20, 2020.
Taiwan Office Action issued to Application No. 109118434 on Mar. 2, 2021.
International Searh Report/ Written Opinion issued to PCT/US2021/040866 on Oct. 29, 2021.
India Examination Report issued to Application No. 202147061439 on Apr. 18, 2022.
European Search Report issued to Patent Application No. 20817680.0 on May 26, 2023.
Chinese Office Action issued to Application No. 202080053854.X on Jan. 28, 2023.
Japanese Office Action issued to Application No. 2021-571873 on Feb. 15, 2023.
China Office Action issued to patent application No. 202080053854.X on Aug. 17, 2023, no translation.
European Search Report issued to Application No. 20817990.3 on Jun. 15, 2023.
Japanese Office Action issued to Patent Applicatin No. 2021-571873 on Jul. 25, 2023.
Korean Office Action issued to Patent Application No. 10-2021-7043146 on Jan. 24, 2024.

* cited by examiner

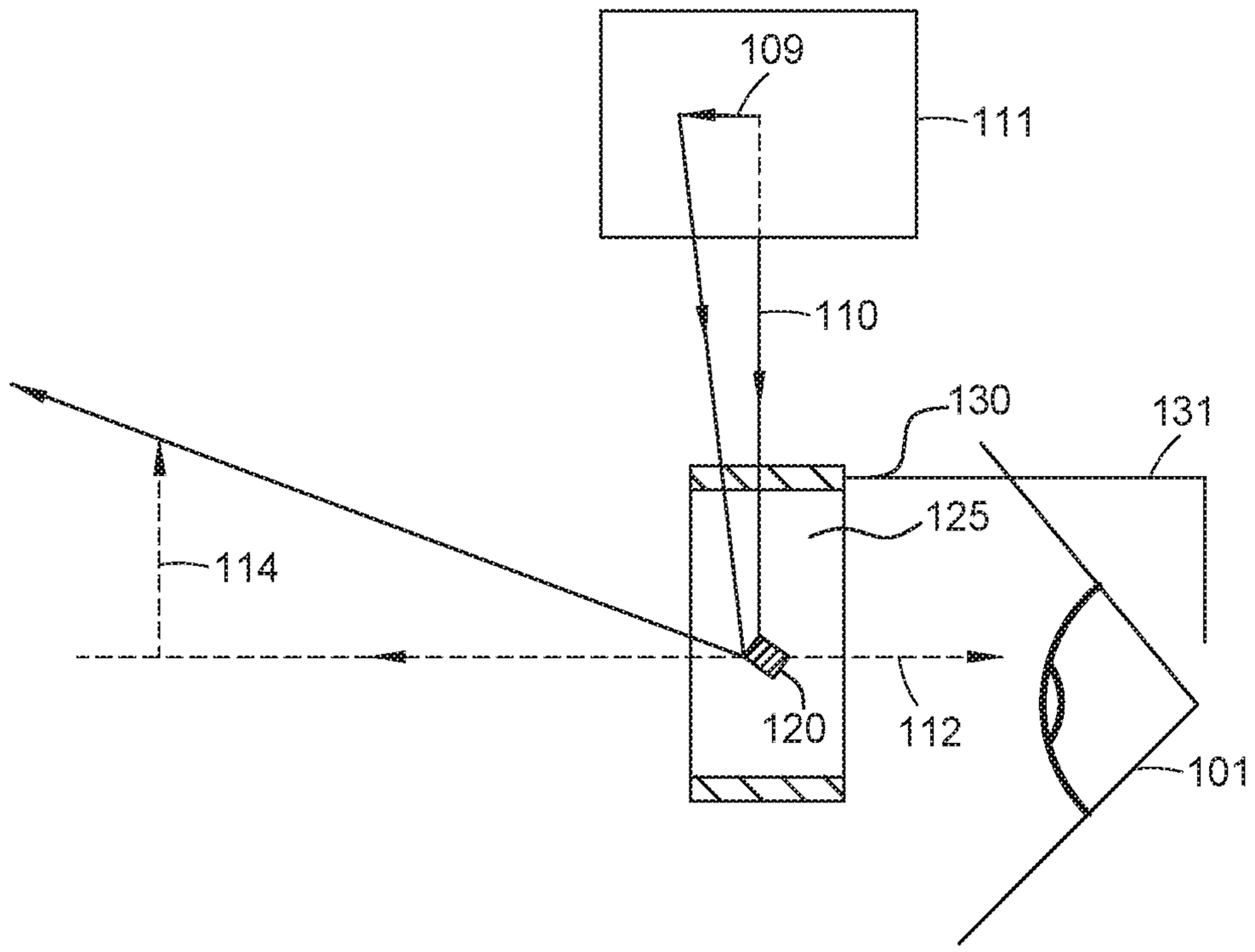
109
111
110
130
131
125
114
120
112
101

FIG. 1A

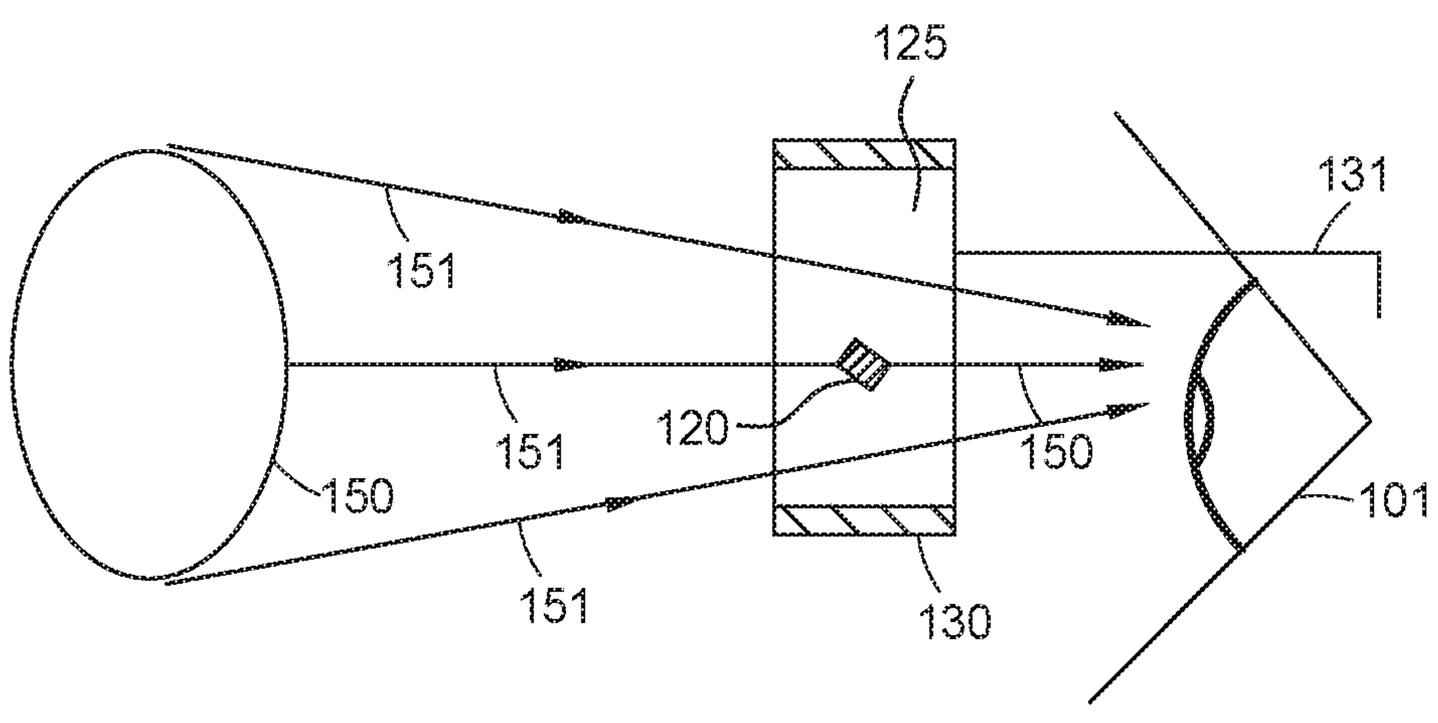
125
131
151
151
120
150
150
151
130
101

FIG. 1B

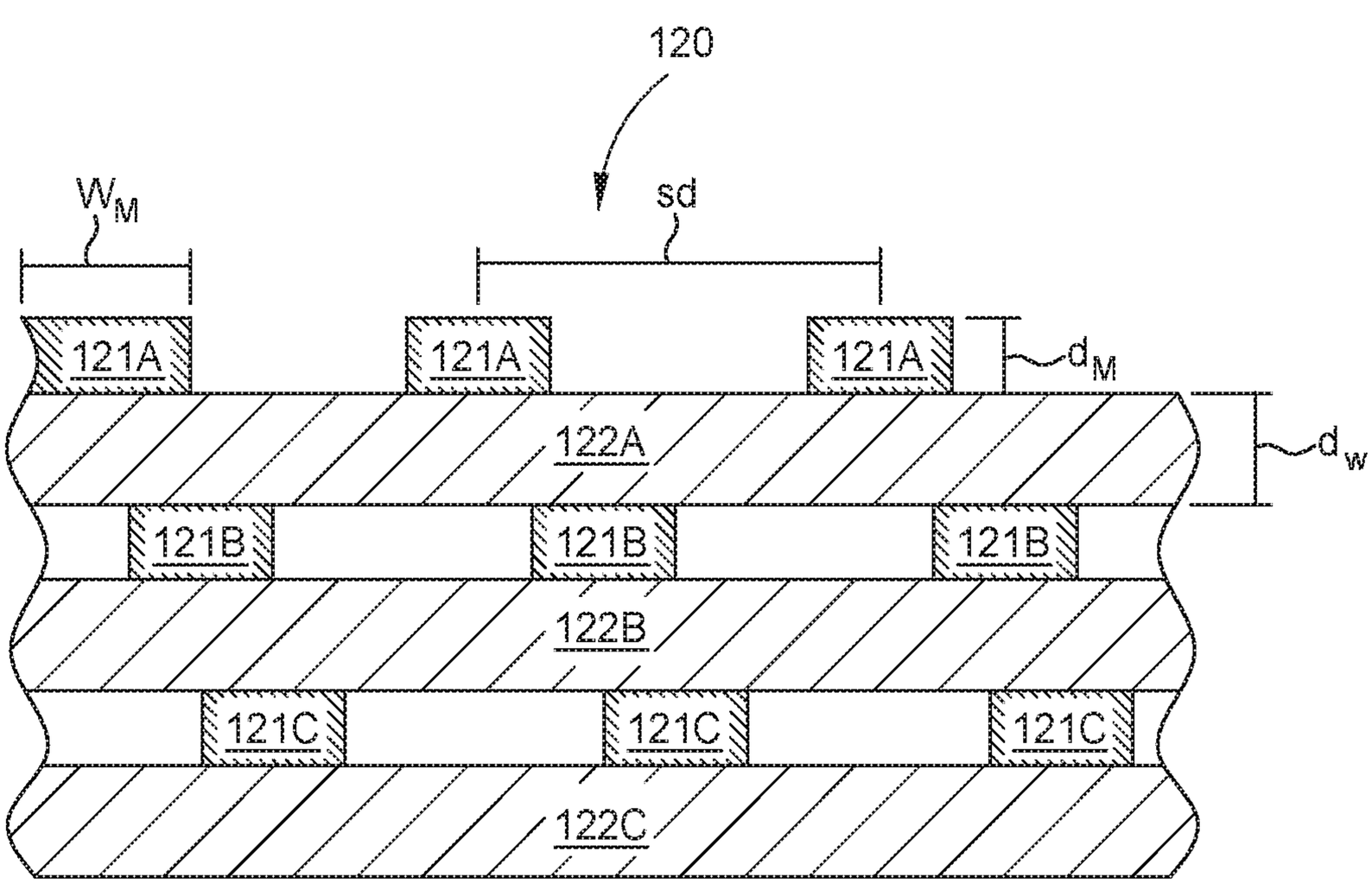
120
W_M
sd
121A
121A
121A
d_M
122A
d_w
121B
121B
121B
122B
121C
121C
121C
122C

FIG. 1C

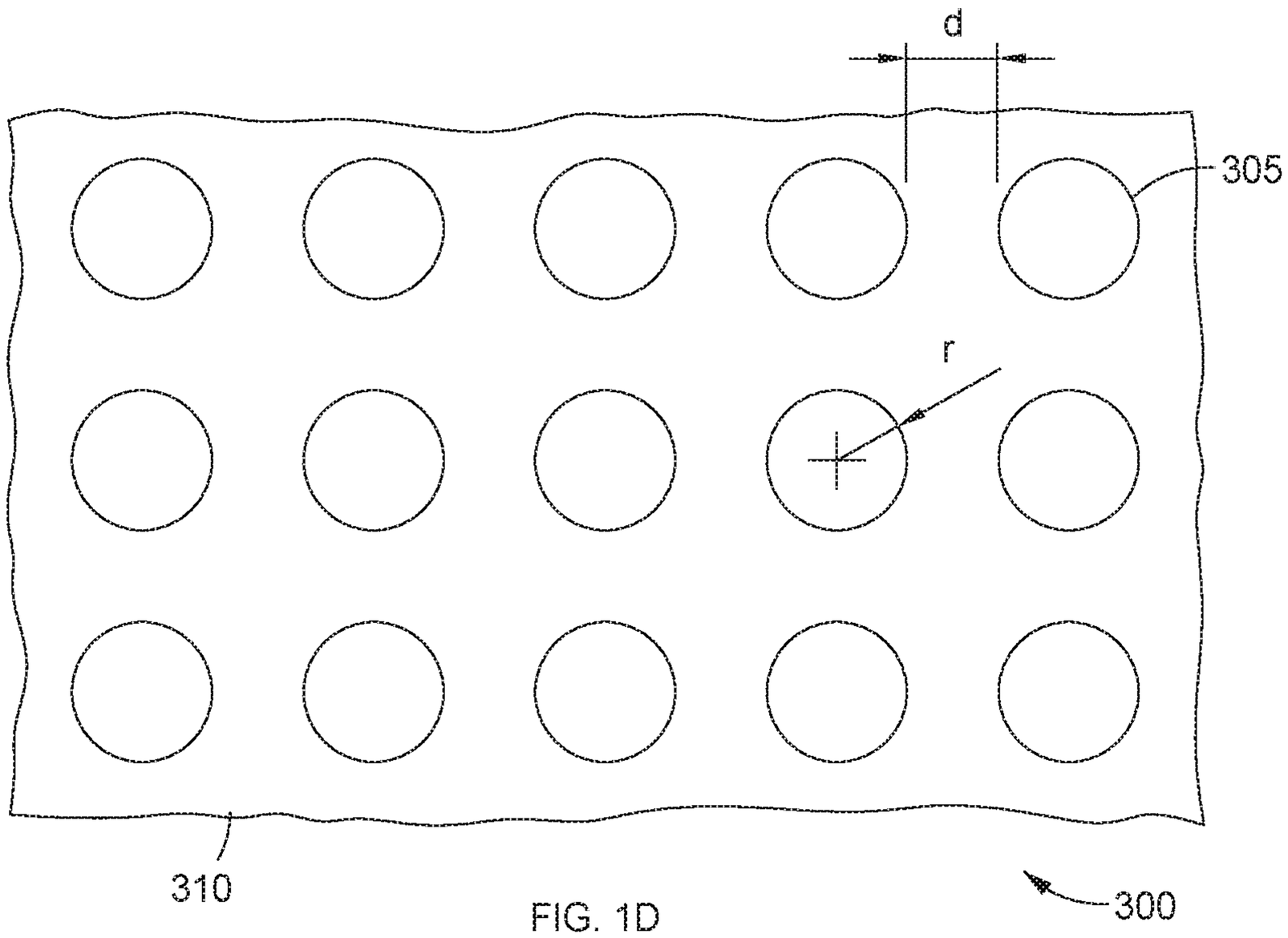

FIG. 1D

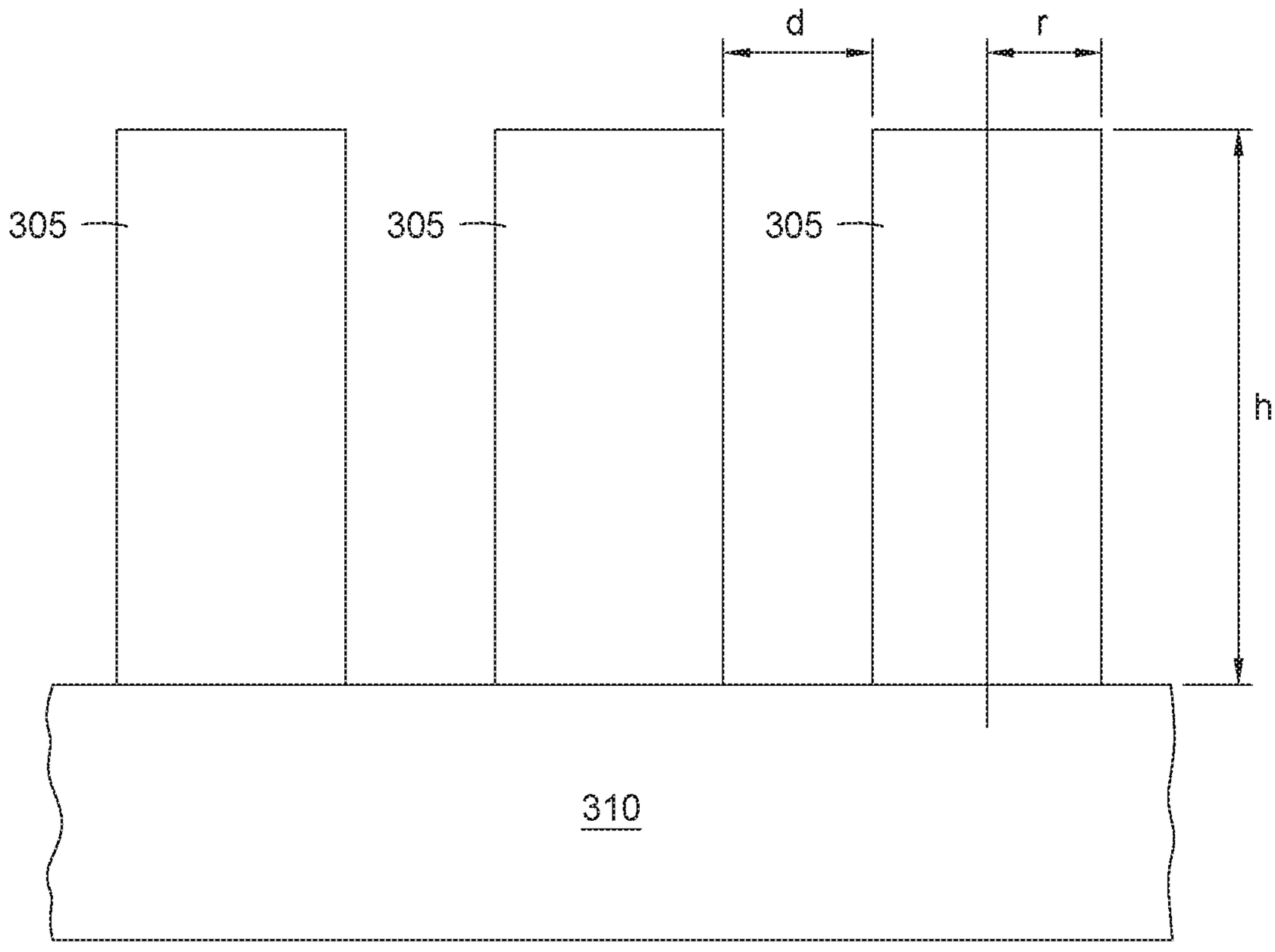

FIG. 1E

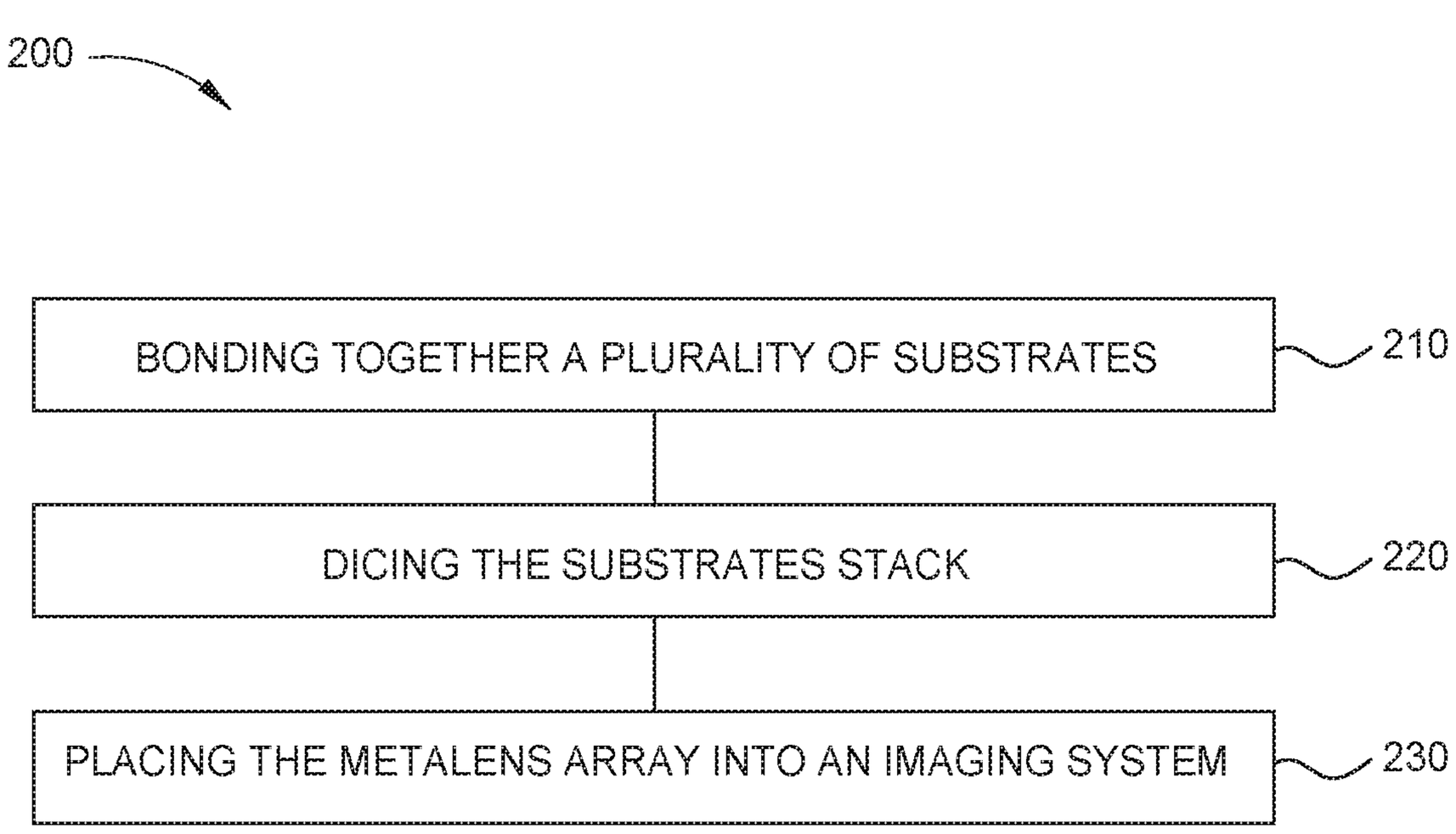
200
BONDING TOGETHER A PLURALITY OF SUBSTRATES
210
DICING THE SUBSTRATES STACK
220
PLACING THE METALENS ARRAY INTO AN IMAGING SYSTEM
230

FIG. 2

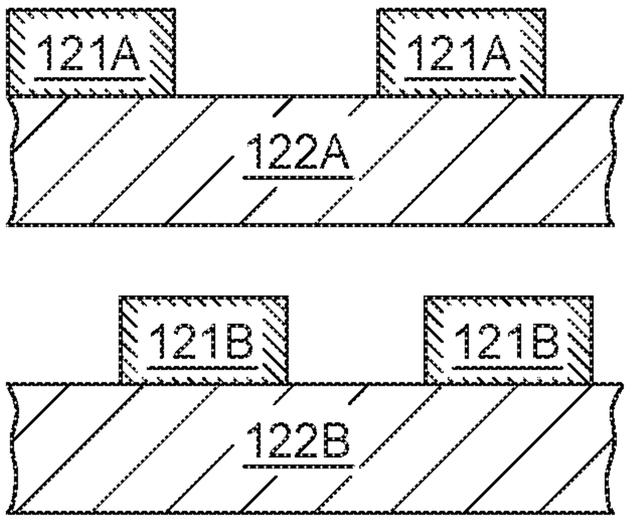

FIG. 3A

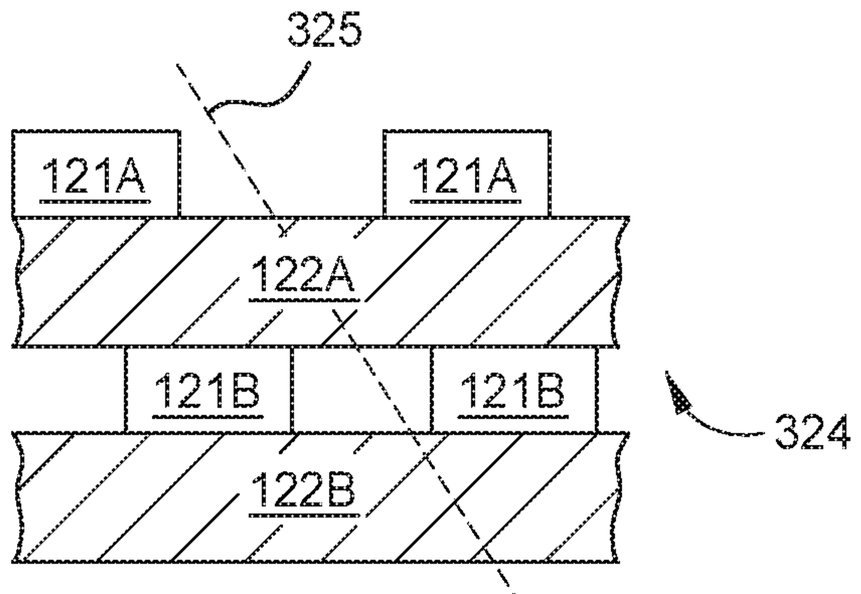

FIG. 3B

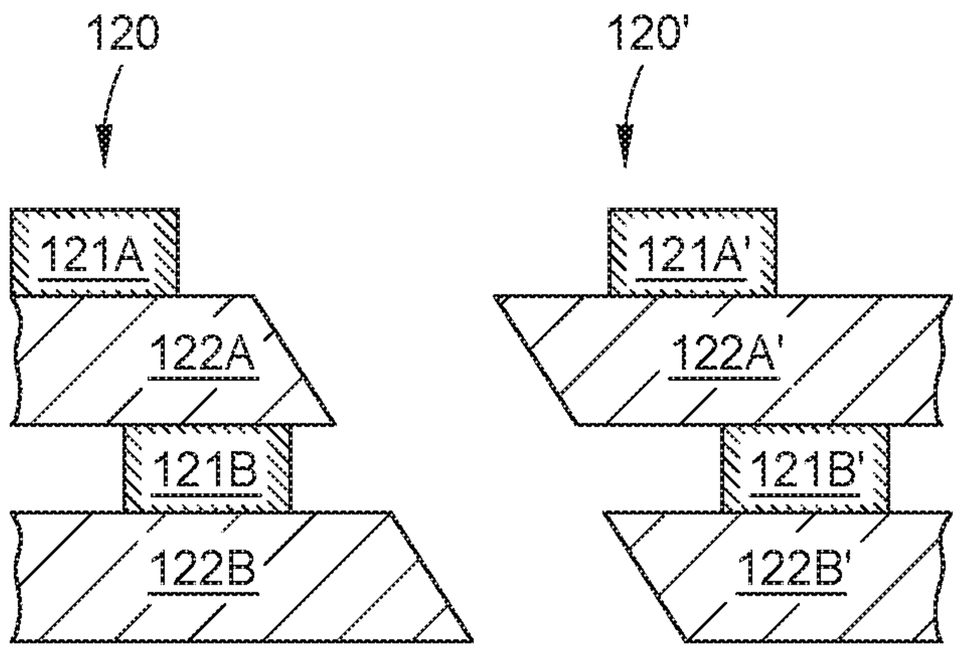

FIG. 3C

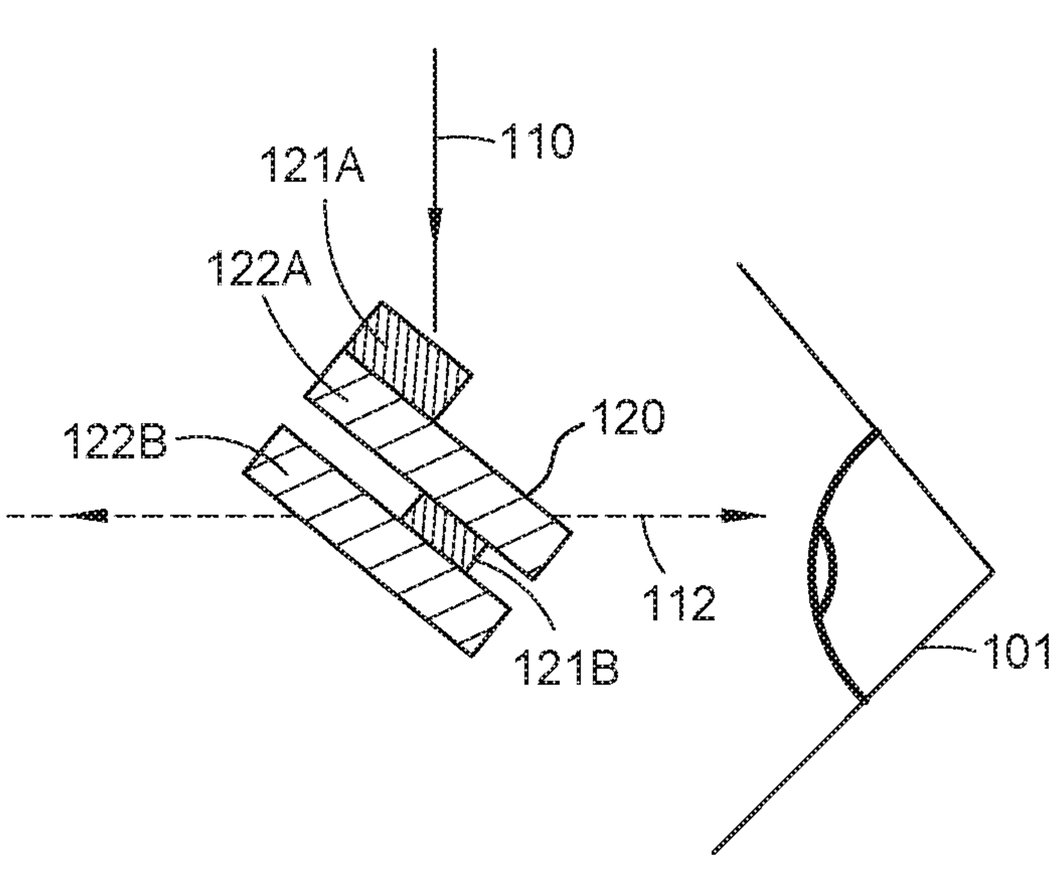

FIG. 3D

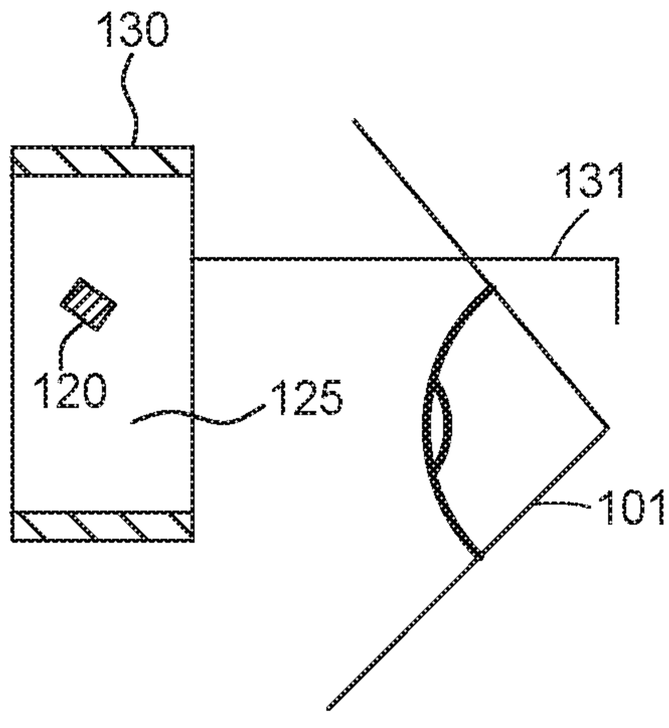

FIG. 3E

IMAGING SYSTEM AND METHOD OF MANUFACTURING A METALENS ARRAY

CROSS-REFERENCE TO RELATED APPLICATIONS

This application claims priority to Indian Provisional Patent Application No. 201941022140, filed Jun. 4, 2019, which is hereby incorporated by reference in its entirety.

BACKGROUND

Field

Embodiments of the invention relate to an apparatus and a method and, more specifically, to an imaging system and a method of manufacturing a metalens array.

Description of the Related Art

Imaging systems used to take pictures are common in the art, with varied applications, including cameras and scanners. One application of imaging systems is for virtual reality (VR) or augmented reality (AR) systems, where images or holograms are projected to an observer in such a way that the images appear to be real objects, unlike pictures or screens where the object is obviously simply a picture. The image sent to the user can either replace what the user sees, or be added to what the user sees.

In order to project objects to be used in VR or AR applications, the imaging system must be able to project images so that they appear to be in front of the user, which typically requires a variety of collimation optics (for instance, focusing lenses) and light combining optics (for instance, beam splitters, light guides, tiny mirrors and mirror arrays). In the scenario of the mirror arrays system, the mirror arrays reflect the image of the object so that the image appears to be in front of the user, giving the user a VR experience. In addition, if the imaging system allows the user to also see his or her environment, the combination of the image and the environment allows for an AR experience.

One drawback in the art is that mirror arrays block the vision of the user, which makes projecting the image onto the user's environment more difficult. The mirrors can blur the user's view of the real world, and the metallic shine of the mirrors are distracting for the user. In addition, arrays of mirrors are hard to manufacture, and controlling spacing and alignment of mirrors is a costly and time-consuming process. Also, the imaging systems in the art typically also require focusing lenses to be used, adding even more time and cost for the manufacturer to properly align the imaging system.

Therefore, there is a need for imaging systems that allow for increased visibility for the user for VR and AR simulations.

SUMMARY

In one embodiment, an imaging system is provided, including one or more metalens arrays. The one or more metalens arrays include a plurality of metalens elements, and a plurality of substrates, the plurality of metalens elements disposed on the plurality of substrates. The one or more metalens arrays are configured such that a first beam of light incident on the one or more metalens arrays is reflected and collimated into a reflected beam. The one or more metalens arrays are at least partially transparent to visible light in a direction parallel to the direction of the reflected beam.

In another embodiment, an imaging system is provided, including a frame, a lens attached to the frame, and one or more metalens arrays. The one or more metalens arrays include a plurality of metalens elements, and a plurality of substrates, the plurality of metalens elements disposed on the plurality of substrates. The one or more metalens arrays are configured such that a first beam of light incident on the one or more metalens arrays is reflected and collimated into a reflected beam. The one or more metalens arrays are at least partially transparent to visible light in a direction parallel to the direction of the reflected beam.

In another embodiment, a method of manufacturing a metalens array is provided, including bonding together a plurality of substrates to create a substrate stack, dicing the substrate stack into a plurality of metalens arrays, and placing the metalens array into an imaging system. Each substrate includes a plurality of metalens elements.

The imaging system allows the observer to see both the projected object and the environment, allowing for a VR or AR experience. The metalens arrays are easy to manufacture and are compatible with existing semiconductor manufacturing processes, and the metalens arrays can be grown on traditional glass substrates.

BRIEF DESCRIPTION OF THE DRAWINGS

So that the manner in which the above-recited features of the present disclosure can be understood in detail, a more particular description of the embodiments, briefly summarized above, may be had by reference to embodiments, some of which are illustrated in the appended drawings. It is to be noted, however, that the appended drawings illustrate only typical embodiments of this disclosure and are therefore not to be considered limiting of its scope, for the disclosure may admit to other equally effective embodiments.

FIGS. **1**A and **1**B illustrate an imaging system, according to one embodiment.

FIG. **1**C illustrates a metalens array, according to one embodiment.

FIG. **1**D illustrates an overhead view of a portion of a plurality of metalens features, according to one embodiment.

FIG. **1**E illustrates a side view of a portion of a plurality of metalens features, according to one embodiment.

FIG. **2** is a flow chart of method operations for creating a metalens array, according to one embodiment.

FIG. **3**A illustrates a plurality of substrates, according to one embodiment.

FIG. **3**B illustrates a substrate stack, according to one embodiment.

FIG. **3**C illustrates metalens arrays created from the substrate stack, according to one embodiment.

FIG. **3**D illustrates a metalens array placed into an imaging system, according to one embodiment.

FIG. **3**E illustrates an imaging system with a frame, according to one embodiment.

To facilitate understanding, identical reference numerals have been used, where possible, to designate identical elements that are common to the figures. It is contemplated that elements and features of one embodiment may be beneficially incorporated in other embodiments without further recitation.

DETAILED DESCRIPTION

Embodiments of the disclosure provided herein include an imaging system including a metalens array, and a method of

manufacturing a metalens array. The imaging system allows the observer to see both a projected object and the environment of the observer, allowing for a VR or AR experience. The method of manufacturing includes bonding together a stack of substrates, wherein the substrates include a plurality of metalens elements. The stack of substrates is diced into metalens arrays, and the metalens arrays are added to the imaging system. Embodiments of the disclosure may be useful for, but are not limited to, an apparatus using a metalens array for VR or AR experiences.

As used herein, the term "about" refers to a +/−10% variation from the nominal value. It is to be understood that such a variation can be included in any value provided herein.

FIG. **1**A illustrates an imaging system **100**, according to one embodiment. As shown, the imaging system **100** includes one or more metalens arrays **120**, a frame **130**, a fastener **131**, an eyepiece **125**, and a micro display **111**. The frame **130** holds the eyepiece **125** with respect to an observer **101**, according to one embodiment. The one or more metalens arrays **120** are embedded in the eyepiece **125**, according to one embodiment. Although only one metalens array **120** is shown for clarity, it is understood that the imaging system **100** can include any number of metalens arrays, such as 1 to 100 metalens arrays. The metalens arrays **120** can be arranged in any desired arrangement, such as a grid, or rows and columns of the metalens array. The metalens arrays **120** can be separated from each other by a distance of from about 1 mm to about 1 cm. The frame **130** can include fasteners **131**, which secure the imaging system **100** to the observer **101**.

A first beam of light **110** emanates from an object **109**. In some embodiments, the object **109** is present on the micro display **111**, the micro display displays the object which is to be shown to the observer, and the first beam of light **110** is created from each pixel of the micro display. The first beam of light **110** is incident on the metalens array **120**. The metalens array **120** collimates and reflects the beam of light **110** to a reflected beam **112**. The reflected beam **112** forms a virtual image **114**, which is seen by the observer **101**. The virtual image **114** is created from the real image **109** on the micro display **111**, and the image is upstream from the observer **101**, according to one embodiment. The first beam of light **110** is reflected and collimated to the reflected beam **112** because the metalens array **120** is configured such that the first beam of light reflects off of the metalens array. Each of the metalens arrays **120** are composed of nanostructure features with spatially varying dimensions (height, width, diameters, etc.). The nanostructure features with different sizes generate different phase delays to incident light. The nanostructure features of the metalens arrays **120** can be designed in such a way that the metalens array functions as a reflective lens, such as a parabolic mirror. Therefore, light from a single pixel on the micro display **111** will be reflected and collimated into a parallel beam by the metalens arrays **120**, and then re-focused by human eye of the observer **101** onto a single pixel on the retina of the eye.

FIG. **1**B illustrates the imaging system **100** of FIG. **1**A, according to one embodiment. It is to be understood that the imaging system **100** of FIG. **1**B is the same as the imaging system of FIG. **1**A, and that the additional figure is shown for clarity. An environment light beam **151** is scattered from an environment **150**, which is incident on the metalens array **120**. The metalens array **120** is constructed such that metalens array is at least partially transparent to the environment light beam **151**, such that the observer **101** can see the environment **150**. The environment light beam **151** consists of visible light. The environment light beam **151** passes through the metalens array **120** because the metalens array is configured such that the metalens array is transparent to the environment light beam. The phase delay imposed by the nanostructure features of the metalens array **120** is sensitive to the incident angle of the environment light beam **151**. The reflective metalens array **120** is designed such that it only efficiently reflects and collimates light incident within a certain angle range, while the metalens arrays has a lesser effect on light outside this angle range. In addition, due to the small size of the metalens arrays **120**, the environment light beam **151** can pass around the metalens arrays, increasing visibility of the environment **150** for the observer **101**.

The imaging system **100** as described allows the observer **101** to see both the virtual image **114** and the environment **150**, and thus the imaging system **100** is an AR imaging system, allowing for an augmented reality experience for the observer **101**, according to one embodiment. For example, the imaging system **100** is a headset, glasses, or goggles, the frame **130** can secure the glasses, goggles, or headset to the ears of the observer **101** by fasteners **131** (e.g., earhooks or glasses arms), and the metalens array **120** is part of the eyepiece **125** of the headset, glasses, or goggles. For example, if the observer **101** is using the imaging system to play a video game, the micro display **111** can project the object **109** from the game such that the object appears as a part of the environment **150** of the observer, allowing for a merging of the video game and reality.

Traditional beam splitters or mirrors are not transparent to visible light, allowing the observer **101** to see only the virtual image **114**, and not the environment **150**. Traditional beam splitters or mirrors can only be made to a certain size, making them obvious and leading to unattractive metallic spots caused by the mirrors in the lenses of eyewear. In addition, metalens arrays **120** are lighter than traditional beam splitters. Also, metalens arrays **120** do not require additional lenses to focus light.

FIG. **1**C illustrates the metalens array **120**, according to one embodiment. As shown, the metalens array **120** includes a plurality of metalens elements **121**A, **121**B, **121**C, and one or more substrates **122**A, **122**B, **122**C. Although three sets of metalens elements **121** and three substrates **122** are shown, any number of metalens elements or substrates can be used. Substrate **122**A includes a plurality of metalens elements **121**A, substrate **122**B includes a plurality of metalens elements **121**B, and substrate **122**C includes a plurality of metalens elements **121**C. It is important to note that the metalens elements **121** are extremely thin in comparison to the thickness of the substrates **122**, and the thickness of the metalens elements is exaggerated for clarity. The width w_m of the metalens elements **121** range from about 100 um to about 2 mm. The separation distance sd between adjacent metalens elements **121** range from about 0.5 mm to about 1 cm. The thickness d_m of the metalens elements **121** range from about 10 nm to about 2 um. The thickness d_m of the metalens elements **121** is much smaller than traditional lenses, resulting in less bulk. In addition, the total size of the metalens array **120** can be increased for higher resolution imaging systems **100**, because the larger metalens array does not interfere with the vision of the observer **101**, as the metalens array is transparent.

The metalens elements **121**B on substrate **122**B can be arranged such that the metalens elements **121**A are not directly above the metalens elements **121**B, as shown in FIG. **1**C. Likewise, the metalens elements **121**B on substrate **122**B can be arranged such that the metalens elements **121**C on substrate **122**C are not directly below the metalens

elements **121**B. The metalens elements **121** do not overlap with each other, so that after bonding and dicing the substrates as described below, each of the metalens elements can be used to image different part of the micro display **111**. The entire image on the micro display **111** will be reflected and collimated by all the metalens elements **111** and fed into human eye of the observer **101**.

FIG. **1**D illustrates an overhead view of a portion **300** of a plurality of metalens features **305**, according to one embodiment. The metalens element **121** includes repeated patterns of the metalens features **305**. The metalens features **305** are nanosized columns grown on a substrate **310**. The metalens features **305** have differing shapes depending on the desired spectrum of light to filter. The metalens features **305** can be substantially circular, triangular, square, rectangular, or have an uneven shape. The metalens features **305** can be made from any suitable high refractive index material, such as, but not limited to, silicon, silicon oxide, silicon nitride, titanium oxide, tantalum oxide, zirconium oxide, hafnium oxide, gallium arsenide, gallium nitride, and niobium oxide. The metalens features **305** can also be made from metallic materials such as gold (Au), silver (Ag), or copper (Cu). The substrate **310** can be any typical transparent substrate, such as glass or plastic. The substrate **310** can include any number of layers disposed thereon. The substrate **310** is, for example, the substrate **122** of FIG. **1**C.

FIG. **1**E illustrates a side view of the portion **300** of the plurality of metalens features **305**, according to one embodiment. The metalens features **305** have a radius of r, which is from about 20 nm to about 500 nm. The metalens features **305** have a height of h, which is from about 10 nm to about 2 μm. The metalens features **305** are separated from each other by a separation distance d, which is from about 30 nm to about 500 nm. The radius, height, shape, material, and feature separation distance of the metalens features **305** are selected to create metalens elements **121** that filters out all but a narrow wavelength band of light.

In one embodiment, the metalens elements **121** have metalens features **305** with circular or elliptical shaped columns, the columns containing silicon dioxide (SiO_2), silicon (Si), titanium dioxide (TiO_2), gallium nitride (GaN) material, the columns having a radius of about 30 nm to 500 nm, the columns having a height of about 10 nm to 2 um, and the columns having a separation of about 30 nm to 500 nm.

The metalens elements **121** can be designed to focus light at a certain wavelength, and thus can be used to selectively focus visible light of a given color. Some of the metalens elements **121**A are designed to focus red light (red metalens element), some of the metalens elements **121**A are designed to focus green light (green metalens element), and some of the metalens elements **121**A are designed to focus blue light (blue metalens element), according to some embodiments. Each red metalens element **121** is located directly adjacent to at least one green metalens element and at least one blue metalens element, according to one embodiment. A combination of red, green, and blue metalens elements **121** allows for a 3-color red-green-blue (RGB) VR or AR imaging system **100**.

The metalens elements **121** can also be designed to focus broadband wavelengths. These achromatic metalens elements **121** will reduce the complexity of the optics, because all RGB colors can be reflected and collimated by one metalens element instead of three.

The substrates **122** can be made of any transparent material. The substrates **122** include glass and/or plastic, according to some embodiments. The substrates **122** have a thickness that varies from about 1 mm to about 1 cm.

The metalens elements **121** reflects the first beam of light **110**, and the metalens array **120** collimates the first beam of light into the reflected beam **112**. The metalens array **120** is also transparent to visible light, allowing the observer to see the environment **150** at the same time as the virtual image **114**, providing an augmented reality experience for the observer. The metalens elements **121** can also be reflective holograms, which function in a similar way as reflective metalens. Holograms can also reflect and collimated light beam simultaneously.

FIG. **2** is a flow chart of method **200** operations for creating a metalens array, according to one embodiment. Although the method **200** operations are described in conjunction with FIGS. **2** and **3**A-E, persons skilled in the art will understand that any system configured to perform the method operations, in any order, falls within the scope of the embodiments described herein. FIG. **3**A illustrates a plurality of substrates **122**A, **122**B, according to one embodiment. The substrates **122**A, **122**B have a plurality of metalens elements **121**A, **121**B disposed thereon. Although two substrates **122** are shown in FIG. **3**A, it is understood that any number of substrates could be used.

The method **200** starts at operation **210**, where the plurality of substrates **122** are bonded to create a substrate stack **324**. FIG. **3**B illustrates the substrate stack **324**, according to one embodiment. The plurality of substrates **122** can be bonded together using any conventional process. For example, the substrates **122** can be bonded by gluing the edges of the substrates together, or by filling the entire space between the substrates with optical glue.

At operation **220**, the substrate stack **324** is diced into individual metalens arrays **120**, **120'**. The dice line **325** is shown in FIG. **3**B to illustrate the dicing of the substrate stack **324**. The substrate stack **325** can be laser diced. In other embodiments, the substrate stack **325** can be diamond scribed, and then the substrate stack is diced afterwards. Although the dice line **325** shown in FIG. **3**B is at an angle to the surface of the substrate **122**, any arbitrary angle of dicing could be used, such as between about 20° to about 70°. FIG. **3**C illustrates metalens arrays **120**, **120'** created from the substrate stack **324**, according to one embodiment. The metalens arrays **120**, **120'** are similar to the metalens array **120** of FIGS. **1**A and **1**B.

At operation **230**, the metalens array **120** is placed in the imaging system **100**. FIG. **3**D illustrates the metalens array **120** placed into the imaging system **100**, according to one embodiment. The metalens array **120** can be embedded into the eyepiece **125**, and the eyepiece **125** is attached to the frame **130**, according to one embodiment. Although only one metalens array **120** is shown for clarity, it is understood that the imaging system **100** can include any number of metalens arrays, such as 1 to 100, and thus operation **230** can include placing any number of metalens arrays, either one at a time or simultaneously. The metalens arrays **120** can be arranged in any desired arrangement, such as a grid, or rows and columns of the metalens array.

As described above, an imaging system includes a metalens array. Light scatters from the object to be displayed in the imaging system, and the light beam from the micro display is incident on the metalens array. The metalens array reflects and collimates the light to the observer, resulting in a VR or AR experience for the observer. The metalens array is at least partially transparent to visible light, allowing scattered light from the environment to penetrate the metalens array and reach the observer.

The metalens arrays act as reflectors for the image light beam, and the metalens arrays are transparent for light

scattered from the environment, allowing the observer to see both the image and the environment. Metalens growth on glass substrates is much simpler than control of curvature and alignment of traditional lens arrays.

While the foregoing is directed to implementations of the present invention, other and further implementations of the invention may be devised without departing from the basic scope thereof, and the scope thereof is determined by the claims that follow.

We claim:

1. An imaging system, comprising:

a metalens array, comprising:

first metalens elements disposed on a first substrate, each of the first metalens elements are spaced from each other, each of the first metalens elements have a first width from a first leading sidewall to a first trailing sidewall; and

second metalens elements disposed on a second substrate and contacting a lower surface of the first substrate and an upper surface of the second substrate, each of the second metalens elements are spaced from each other, wherein:

each of the second metalens elements have a second width from a second leading sidewall to a second trailing sidewall;

the second trailing sidewall extend past the first trailing sidewall of each of the first metalens elements disposed on the first substrate; and

the second leading sidewall of each of the second metalens elements extend past the first leading sidewall of each of the first metalens elements disposed on the first substrate,

wherein the metalens array is configured such that a first beam of light incident on the metalens array is reflected and collimated into a reflected beam, and

the metalens array is at least partially transparent to visible light in a direction parallel to the direction of the reflected beam.

2. The imaging system of claim **1**, wherein at least one of the first substrate and the second substrate comprises glass.

3. The imaging system of claim **1**, wherein at least one of the first substrate and the second substrate comprises plastic.

4. The imaging system of claim **1**, wherein the imaging system is an augmented reality (AR) imaging system.

5. The imaging system of claim **1**, further comprising a micro display, wherein light created from the micro display forms the first beam of light.

6. The imaging system of claim **1**, further comprising:

third metalens elements disposed on a third substrate and contacting the lower surface of the second substrate and the upper surface of the third substrate, each of the third metalens elements are spaced from each other, wherein:

each of the third metalens elements have a third width from a third leading sidewall to a third trailing sidewall;

the third trailing sidewall of each of the third metalens elements extend past the second trailing sidewall of each of the second metalens elements disposed on the second substrate; and

the third leading sidewall of each of the third metalens elements extend past the second leading sidewall of each of the second metalens elements disposed on the second substrate.

7. An imaging system, comprising:

a frame;

a lens attached to the frame; and

a metalens array disposed in the lens, the metalens array comprising:

first metalens elements disposed on a first substrate, each of the first metalens elements are spaced from each other, each of the first metalens elements have a first width from a first leading sidewall to a first trailing sidewall; and

second metalens elements disposed on a second substrate and contacting a lower surface of the first substrate and an upper surface of the second substrate, each of the second metalens elements are spaced from each other, wherein:

each of the second metalens elements have a second width from a second leading sidewall to a second trailing sidewall;

the second trailing sidewall extend past the first trailing sidewall of each of the first metalens elements disposed on the first substrate; and

the second leading sidewall of each of the second metalens elements extend past the first leading sidewall of each of the first metalens elements disposed on the first substrate,

wherein the metalens array is configured such that a first beam of light incident on the one or more metalens arrays is reflected and collimated into a reflected beam, and

the metalens array is at least partially transparent to visible light in a direction parallel to the direction of the reflected beam.

8. The imaging system of claim **7**, wherein at least one of the first substrate and the second substrate comprises glass.

9. The imaging system of claim **7**, wherein at least one of the first substrate and the second substrate comprises plastic.

10. The imaging system of claim **7**, wherein the imaging system is an augmented reality (AR) imaging system.

11. The imaging system of claim **7**, further comprising a micro display, wherein light created from the micro display forms the first beam of light.

12. The imaging system of claim **7**, further comprising:

third metalens elements disposed on a third substrate and contacting the lower surface of the second substrate and the upper surface of the third substrate, each of the third metalens elements are spaced from each other, wherein:

each of the third metalens elements have a third width from a third leading sidewall to a third trailing sidewall;

the third trailing sidewall of each of the third metalens elements extend past the second trailing sidewall of each of the second metalens elements disposed on the second substrate; and

the third leading sidewall of each of the third metalens elements extend past the second leading sidewall of each of the second metalens elements disposed on the second substrate.

13. A method of manufacturing a metalens array, comprising:

bonding together a first substrate and a second substrate to create a substrate stack, wherein:

the first substrate comprises first metalens elements disposed thereon, each of the first metalens elements are spaced from each other, each of the first metalens elements have a first width from a first leading sidewall to a first trailing sidewall; and

the second substrate comprises second metalens elements disposed thereon and contacting a lower surface of the first substrate and an upper surface of the

second substrate, each of the second metalens elements are spaced from each other, wherein:

each of the second metalens elements have a second width from a second leading sidewall to a second trailing sidewall;

the second trailing sidewall extend past the first trailing sidewall of each of the first metalens elements disposed on the first substrate; and

the second leading sidewall of each of the second metalens elements extend past the first leading sidewall of each of the first metalens elements disposed on the first substrate;

dicing the substrate stack into a plurality of metalens arrays; and

placing the metalens array into an imaging system.

14. The method of claim **13**, wherein the metalens array is configured such that:

a first beam of light incident on the metalens array is reflected and collimated into a reflected beam, and

the metalens array is at least partially transparent to visible light in a direction parallel to the direction of the reflected beam.

15. The method of claim **13**, wherein the first metalens elements comprise at least one red metalens element, at least one green metalens element, and at least one blue metalens element.

16. The method of claim **13**, wherein each metalens element is an achromatic metalens element.

17. The method of claim **13**, wherein at least one of the first substrate and the second substrate comprises glass.

18. The method of claim **13**, wherein at least one of the first substrate and the second substrate comprises plastic.

19. The method of claim **13**, wherein the placing the metalens array into an imaging system comprises embedding the metalens array into a lens.

20. The method of claim **13**, wherein:

third metalens elements are disposed on a third substrate and contacting the lower surface of the second substrate and the upper surface of the third substrate, each of the third metalens elements are spaced from each other, wherein:

each of the third metalens elements have a third width from a third leading sidewall to a third trailing sidewall;

the third trailing sidewall of each of the third elements extend past the second trailing sidewall of each of the second metalens elements disposed on the second substrate; and

the third leading sidewall of each of the third elements extend past the second leading sidewall of each of the second metalens elements disposed on the second substrate.

* * * * *