US012084761B2

(12) **United States Patent**
Armstrong et al.

(10) **Patent No.: US 12,084,761 B2**
(45) **Date of Patent: Sep. 10, 2024**

(54) **MULTI-DEPTH FILM FOR OPTICAL DEVICES**

(71) Applicant: **Applied Materials, Inc.**, Santa Clara, CA (US)

(72) Inventors: **Karl J. Armstrong**, Sunnyvale, CA (US); **Ludovic Godet**, Sunnyvale, CA (US); **Brian Alexander Cohen**, Delmar, NY (US); **Wayne McMillan**, San Jose, CA (US); **James D. Strassner**, Austin, TX (US); **Benjamin B. Riordon**, Newburyport, MA (US)

(73) Assignee: **Applied Materials, Inc.**, Santa Clara, CA (US)

(*) Notice: Subject to any disclaimer, the term of this patent is extended or adjusted under 35 U.S.C. 154(b) by 0 days.

(21) Appl. No.: **18/111,385**

(22) Filed: **Feb. 17, 2023**

(65) **Prior Publication Data**

US 2023/0203647 A1 Jun. 29, 2023

Related U.S. Application Data

(62) Division of application No. 16/843,347, filed on Apr. 8, 2020, now Pat. No. 11,608,558.
(Continued)

(51) **Int. Cl.**
H01L 21/677 (2006.01)
C23C 14/04 (2006.01)
(Continued)

(52) **U.S. Cl.**
CPC ***C23C 16/405*** (2013.01); ***C23C 14/042*** (2013.01); ***C23C 14/0652*** (2013.01);
(Continued)

(58) **Field of Classification Search**
CPC H01L 21/682
See application file for complete search history.

(56) **References Cited**

U.S. PATENT DOCUMENTS

4,776,868 A 10/1988 Trotter, Jr. et al.
5,728,215 A 3/1998 Itagaki et al.
(Continued)

FOREIGN PATENT DOCUMENTS

CN 107887509 A 4/2018
CN 108026627 A 5/2018
(Continued)

OTHER PUBLICATIONS

1 Chinese Office Action issued to Patent Application No. 202080026802.3 on Feb. 25, 2023.
(Continued)

Primary Examiner — Jonathan Snelting
(74) *Attorney, Agent, or Firm* — Patterson + Sheridan, LLP

(57) **ABSTRACT**

Embodiments of the present disclosure relate to forming multi-depth films for the fabrication of optical devices. One embodiment includes disposing a base layer of a device material on a surface of a substrate. One or more mandrels of the device material are disposed on the base layer. The disposing the one or more mandrels includes positioning a mask over of the base layer. The device material is deposited with the mask positioned over the base layer to form an optical device having the base layer with a base layer depth and the one or more mandrels having a first mandrel depth and a second mandrel depth.

7 Claims, 12 Drawing Sheets

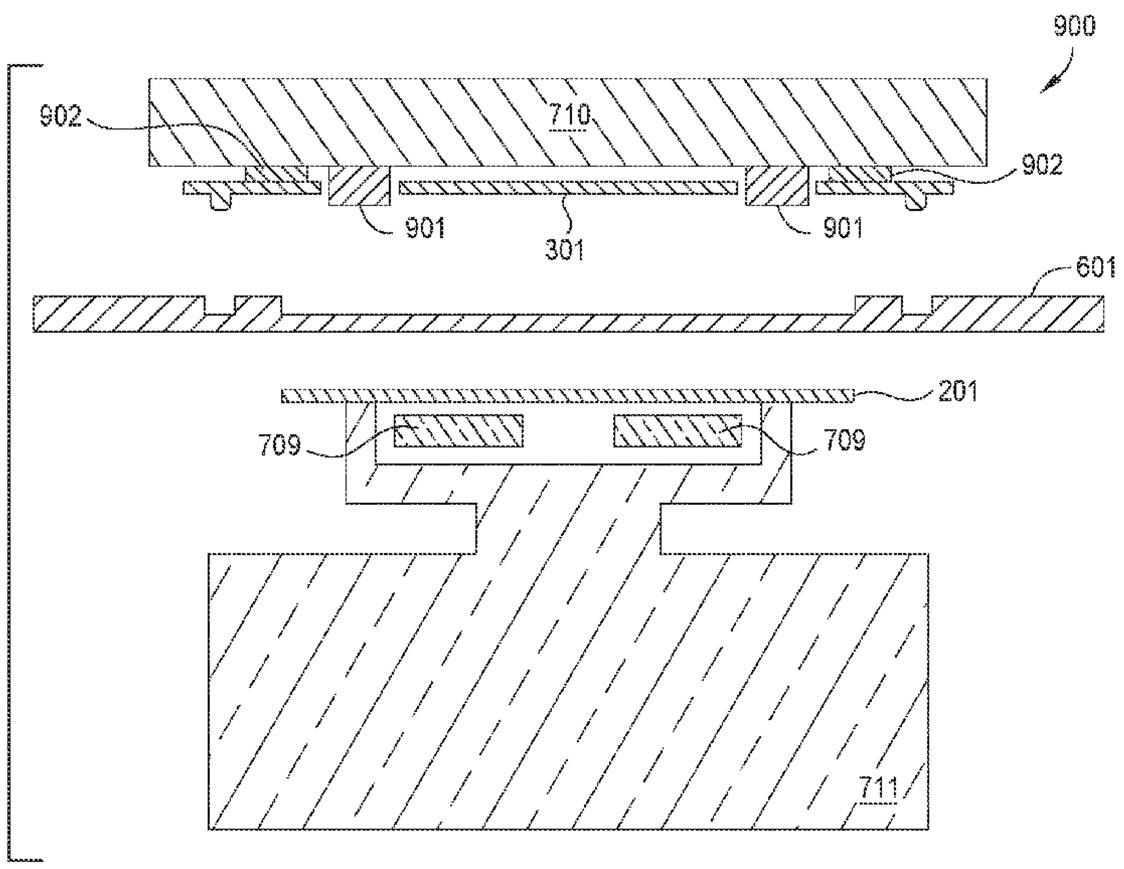

Related U.S. Application Data

(60) Provisional application No. 62/832,752, filed on Apr. 11, 2019.

(51) **Int. Cl.**

C23C 14/06	(2006.01)
C23C 14/08	(2006.01)
C23C 14/14	(2006.01)
C23C 16/04	(2006.01)
C23C 16/24	(2006.01)
C23C 16/34	(2006.01)
C23C 16/40	(2006.01)
C23C 16/455	(2006.01)
C23C 16/56	(2006.01)
H01L 21/68	(2006.01)
H01L 21/683	(2006.01)
G02B 6/132	(2006.01)

(52) **U.S. Cl.**

CPC ***C23C 14/083*** (2013.01); ***C23C 14/086*** (2013.01); ***C23C 14/14*** (2013.01); ***C23C 16/042*** (2013.01); ***C23C 16/24*** (2013.01); ***C23C 16/345*** (2013.01); ***C23C 16/407*** (2013.01); ***C23C 16/45525*** (2013.01); ***C23C 16/56*** (2013.01); ***H01L 21/67766*** (2013.01); ***H01L 21/67778*** (2013.01); ***H01L 21/682*** (2013.01); ***H01L 21/6838*** (2013.01); *G02B 6/132* (2013.01)

(56) **References Cited**

U.S. PATENT DOCUMENTS

6,343,171	B1	1/2002	Yoshimura et al.
6,696,220	B2	2/2004	Bailey et al.
7,142,363	B2	11/2006	Sato et al.
8,873,144	B2	10/2014	Davis
8,964,190	B2	2/2015	Tanaka et al.
10,304,713	B2	5/2019	White et al.
10,937,681	B2 *	3/2021	Amano H01L 21/6838
11,608,558	B2 *	3/2023	Armstrong C23C 14/042
2002/0168166	A1	11/2002	Itoh et al.
2003/0159528	A1	8/2003	Kim et al.
2004/0150311	A1	8/2004	Jin
2008/0063851	A1	3/2008	Jackman et al.
2010/0136784	A1	6/2010	Mebarki et al.
2012/0190183	A1	7/2012	Ricci
2015/0129544	A1	5/2015	Davis
2015/0162231	A1	6/2015	Cox et al.
2015/0325411	A1	11/2015	Godet et al.
2016/0356958	A1	12/2016	Shi et al.
2018/0142343	A1	5/2018	Zeng et al.
2018/0209030	A1	7/2018	Khayrullin et al.
2018/0341090	A1	11/2018	Devlin et al.
2018/0348427	A1	12/2018	Tervo
2019/0011708	A1	1/2019	Schultz et al.
2019/0096733	A1 *	3/2019	Amano H01L 21/68735

FOREIGN PATENT DOCUMENTS

EP	0580112	A1	1/1994
EP	2264213	A1	12/2010
JP	H200335883	A	2/1991
JP	2002184804	A	6/2002
JP	2016-106179	A	6/2016
KP	20130046303	A	5/2013
TW	201105809	A	2/2011
WO	200481626	A1	9/2004

OTHER PUBLICATIONS

1 Taiwan Office Action issued Patent Application No. 109112135 on Nov. 17, 2023.

Japanese Office Action issued to Patent Application No. 2021-559554 on Feb. 7, 2023.

International Search Report and Written Opinion for International Application No. PCT/US2020/027205 dated Aug. 10, 2020.

Office Action for U.S. Appl. No. 16/843,347 dated Jan. 6, 2022.

Final Office Action for U.S. Appl. No. 16/843,347 dated Jun. 29, 2022.

Masters Thomas et al: "Easy Fabrication of Thin Membranes with Through Ho1es. App1ication to Protein Patterning", Plos One, vo1. 7, No. 8, Aug. 31, 2012 (Aug. 31, 2012) , p. e44261, XP093030314, DOI: 0.1371/journa1.pone.0044261 Retrieved from the Internet: URL:https://journa1s.p1os.org/p1osone/arti c1e/file?id=10.1371/journa1.pone.0044261&t ype=printable> fugyre 4.

Siitonen Samu1i et al: "A doub1e-sided grating coup1er for thin 1ight guides", Optics Express, Mar. 5, 2007 (Mar. 5, 2007), pp. 2008-2018, XP093032228, Retrieved from the Internet: URL:https://opg.optica.org/directpdfaccess /25d907a2-e96b-453c-b9d1740abb5dffed_13055 8/oe-15-5-2008.pdf?da=1&id=130558&seq=0&mobi1e=no [retrieved on Mar. 16, 2023] * figure 5 *.

European Search Report Issued to Patent Application No. 20787117.9 on Mar. 24, 2023.

China Office Action issued to Application No. 202080026802.3 on Sep. 13, 2023.

Korean Office Action issued to Patent Application No. 10-2021-7036619 on Jun. 19, 2023.

* cited by examiner

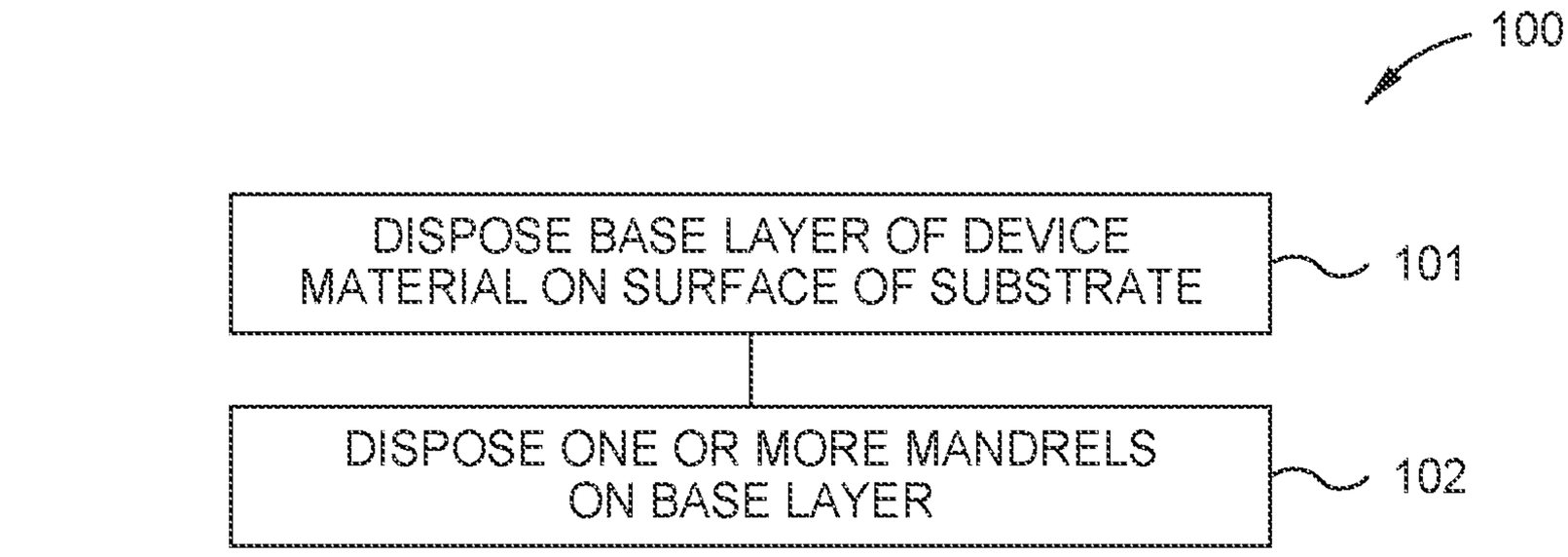

FIG. 1

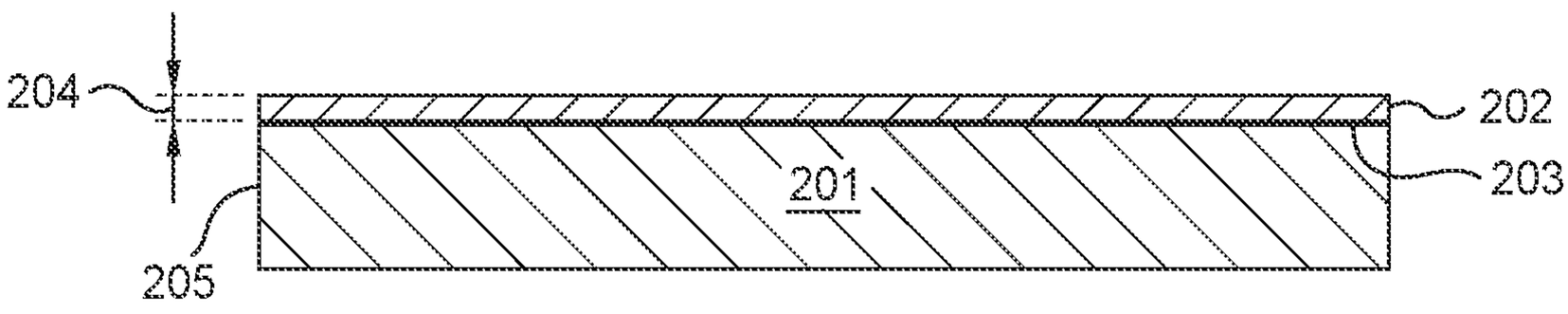

FIG. 2A

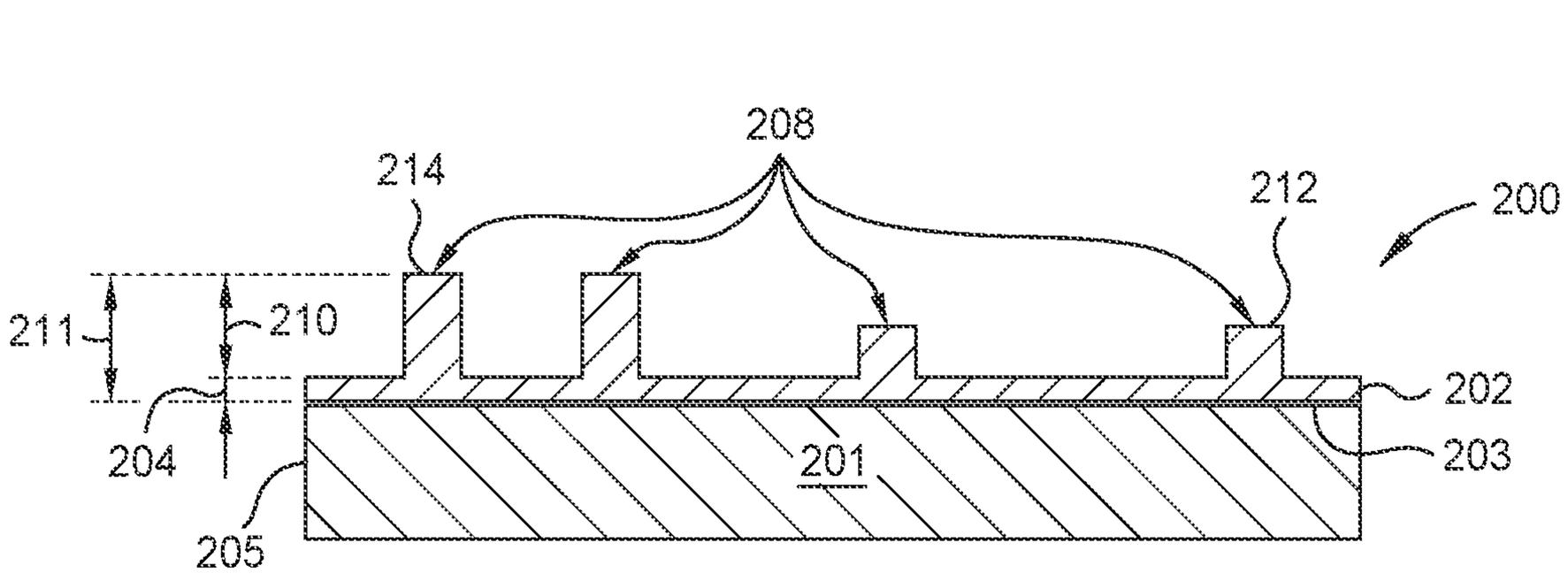

FIG. 2B

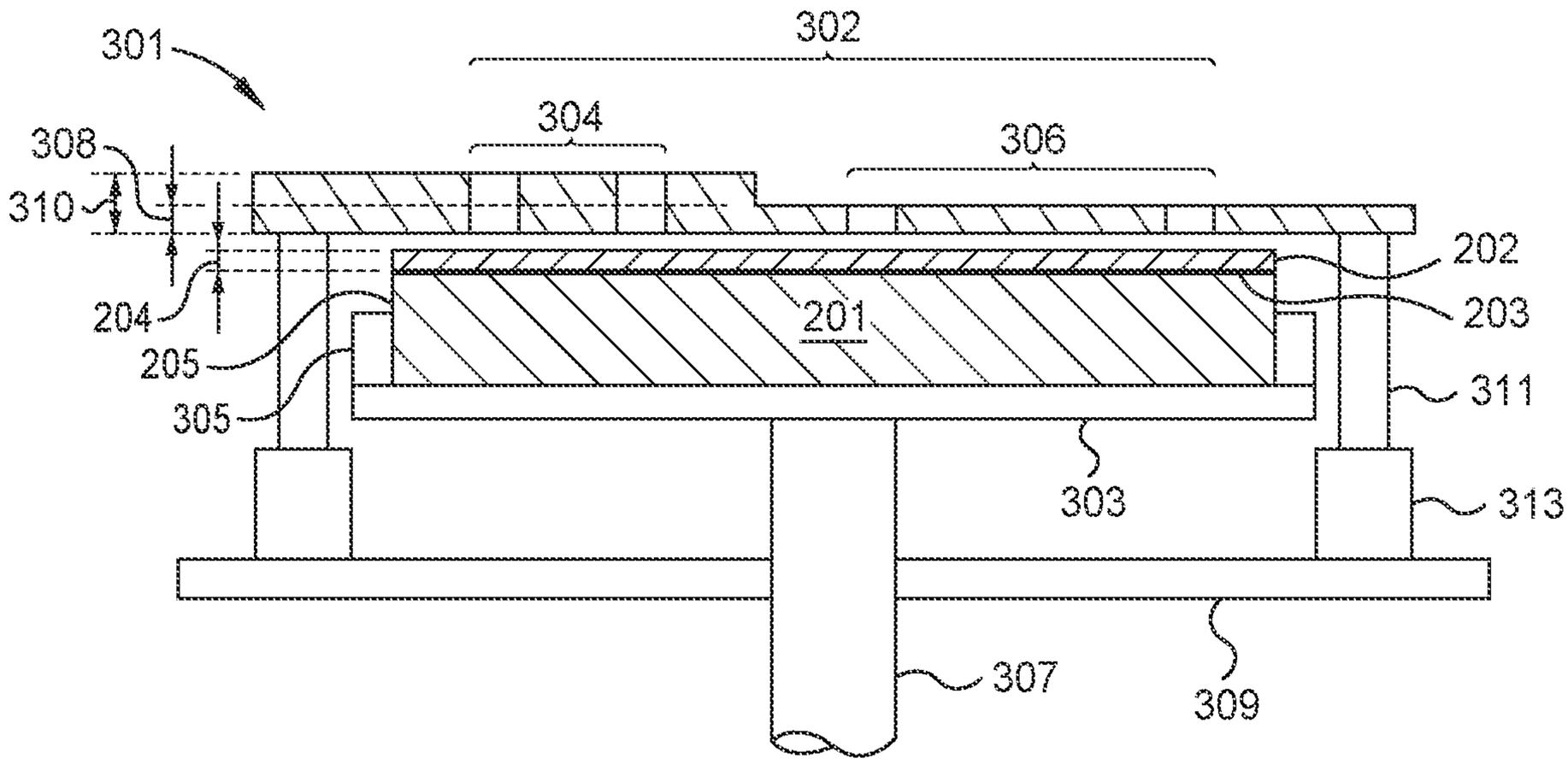
301
302
304
306
308
310
204
205
305
201
202
203
311
303
313
307
309

FIG. 3A

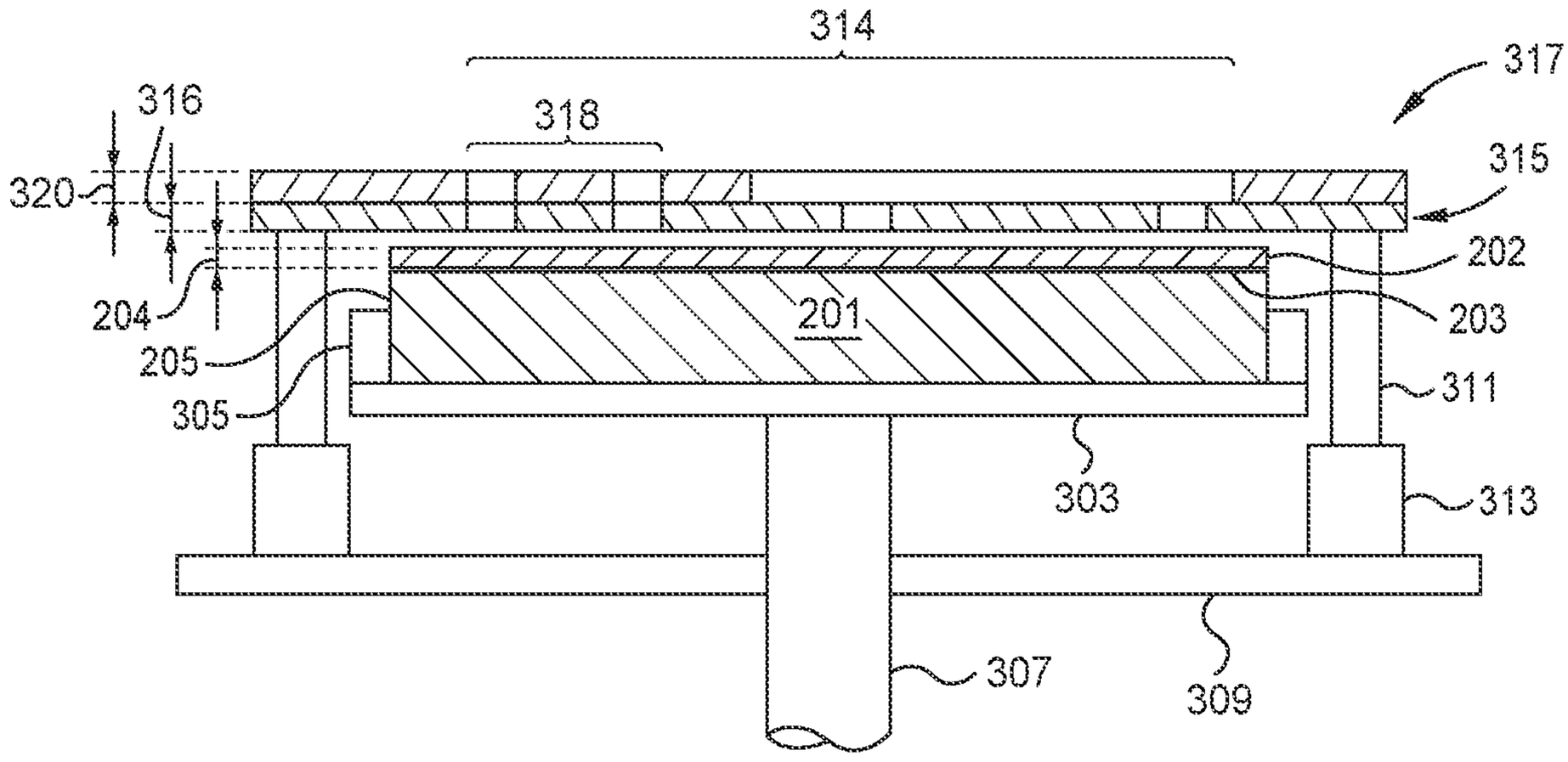
314
317
316
318
320
315
204
205
305
201
202
203
311
303
313
307
309

FIG. 3B

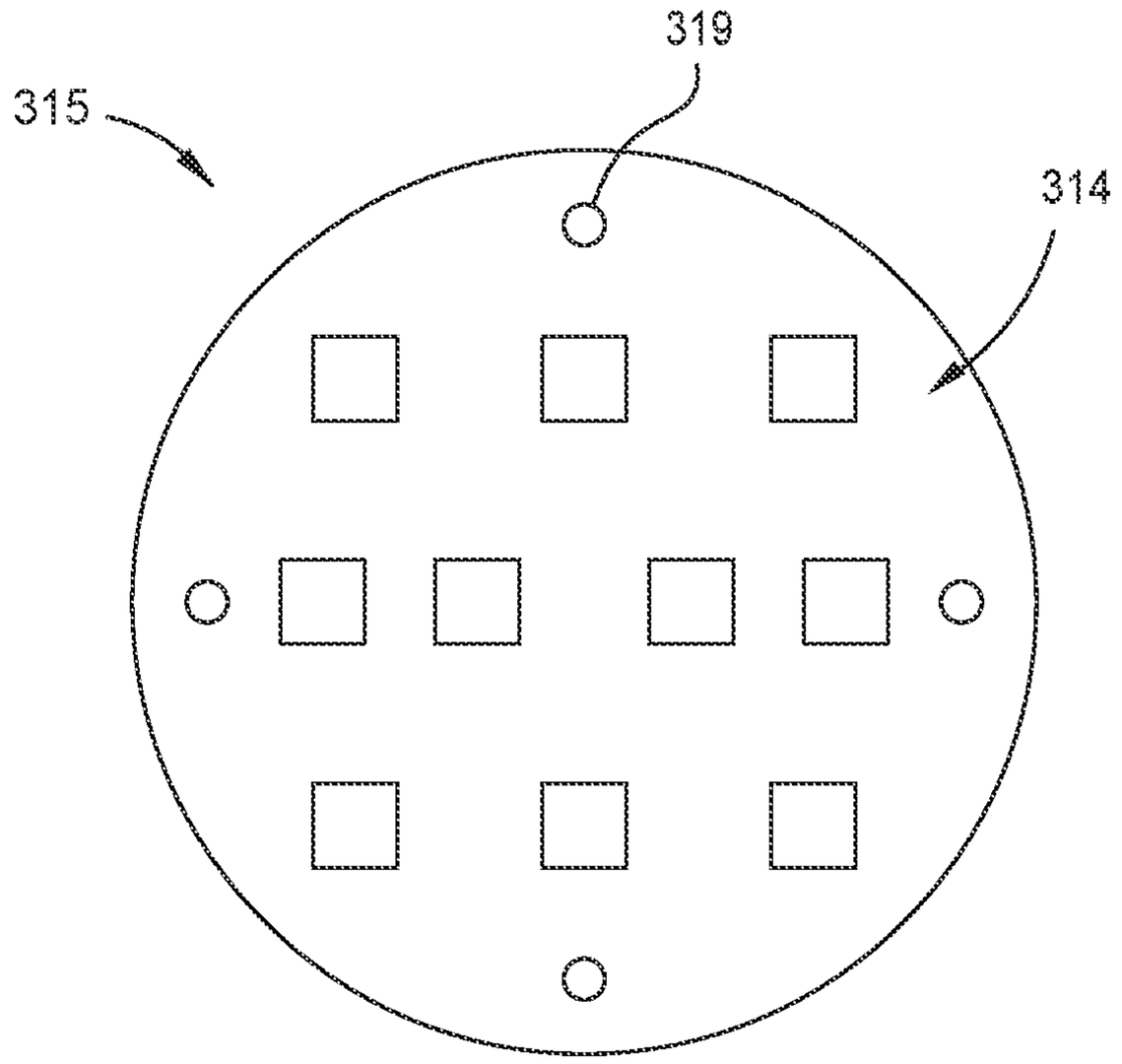

FIG. 3C

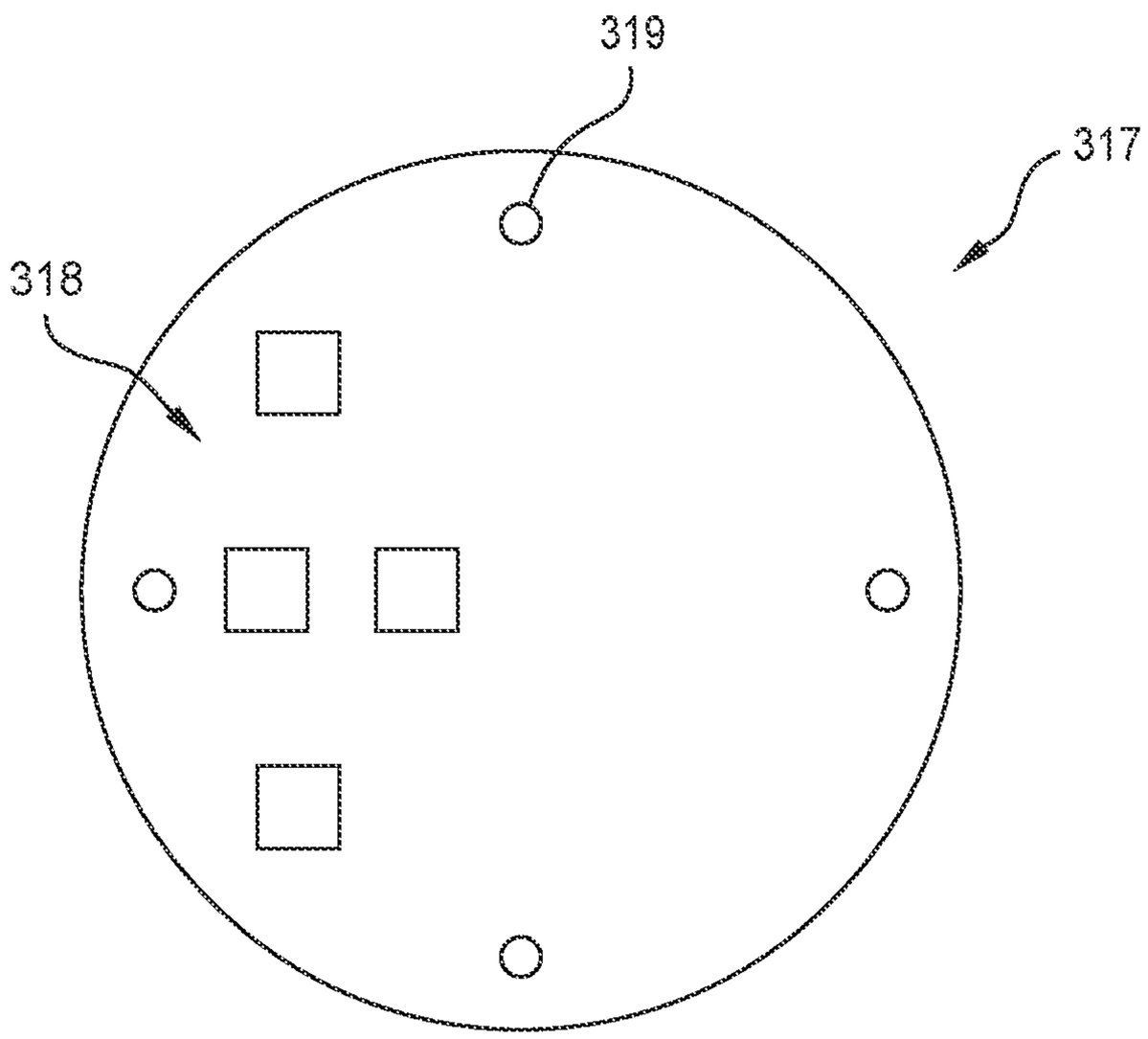

FIG. 3D

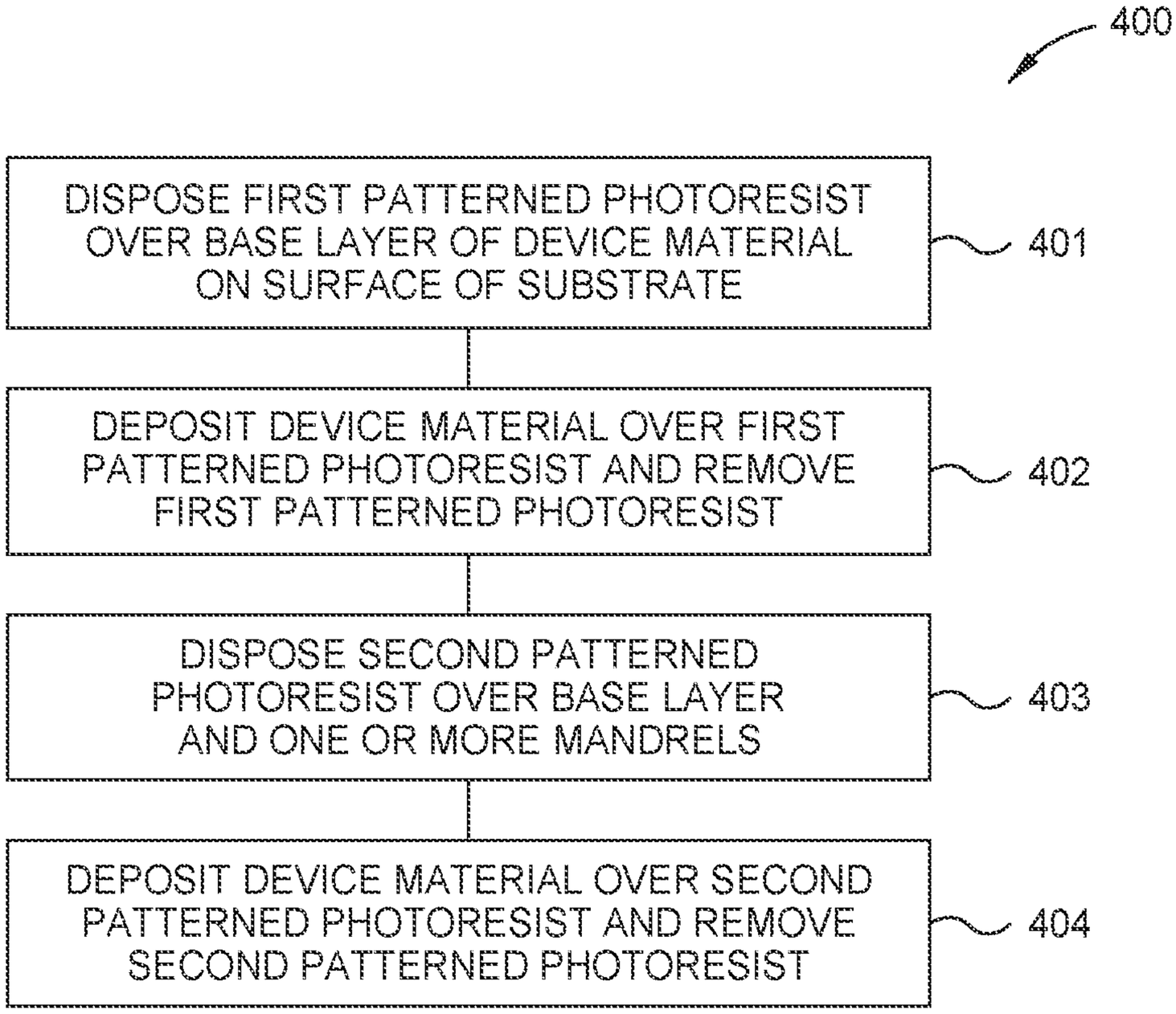
400
DISPOSE FIRST PATTERNED PHOTORESIST OVER BASE LAYER OF DEVICE MATERIAL ON SURFACE OF SUBSTRATE
401
DEPOSIT DEVICE MATERIAL OVER FIRST PATTERNED PHOTORESIST AND REMOVE FIRST PATTERNED PHOTORESIST
402
DISPOSE SECOND PATTERNED PHOTORESIST OVER BASE LAYER AND ONE OR MORE MANDRELS
403
DEPOSIT DEVICE MATERIAL OVER SECOND PATTERNED PHOTORESIST AND REMOVE SECOND PATTERNED PHOTORESIST
404

FIG. 4

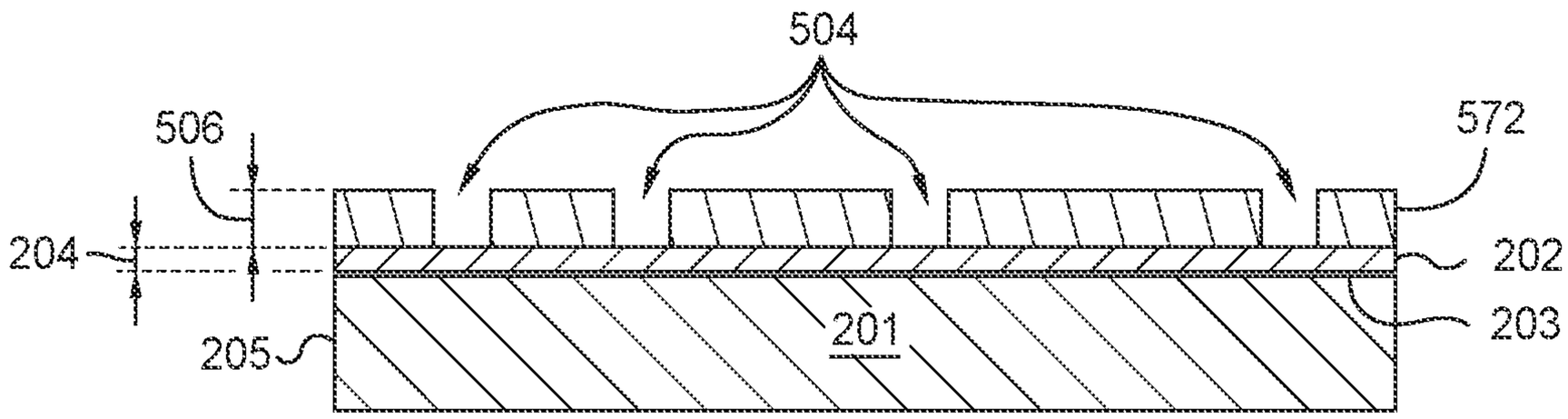

FIG. 5A

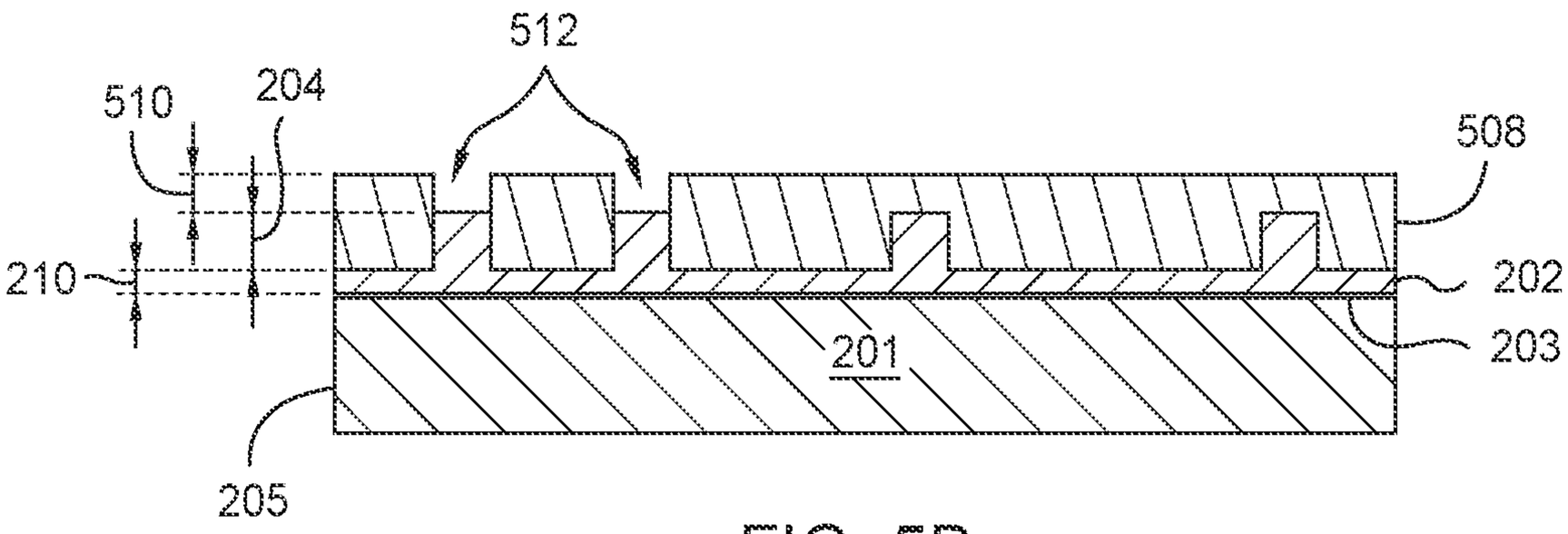

FIG. 5B

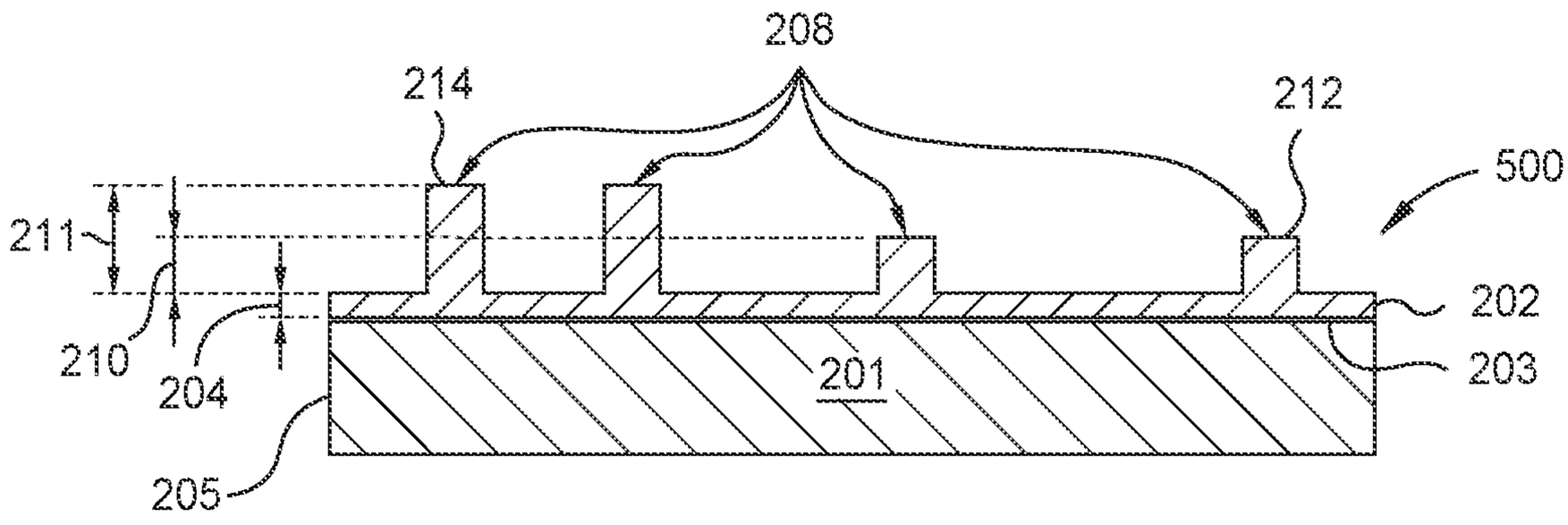

FIG. 5C

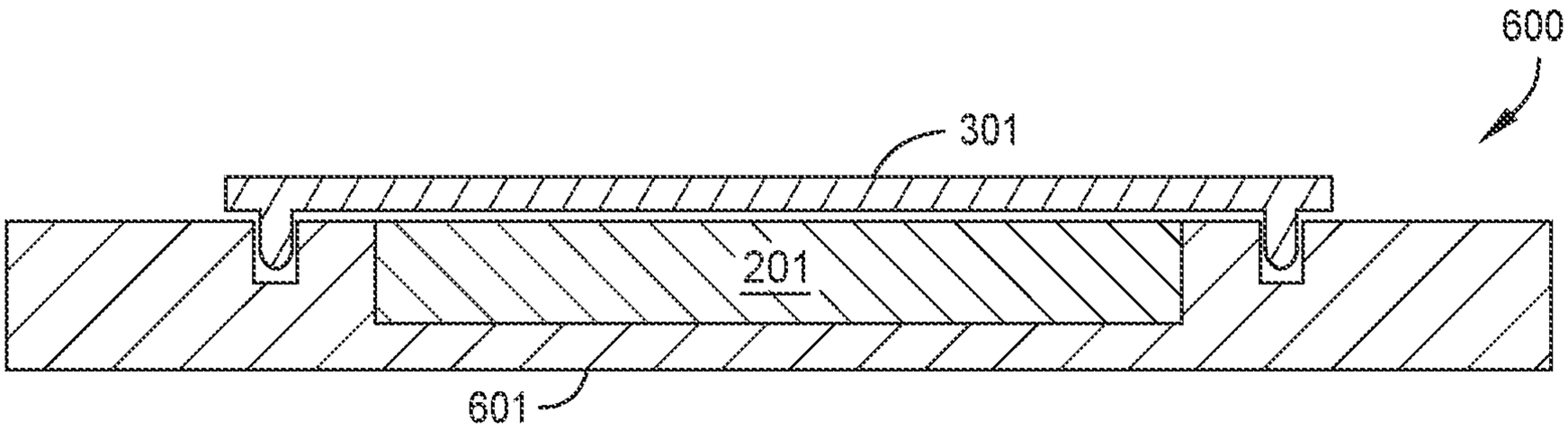

FIG. 6

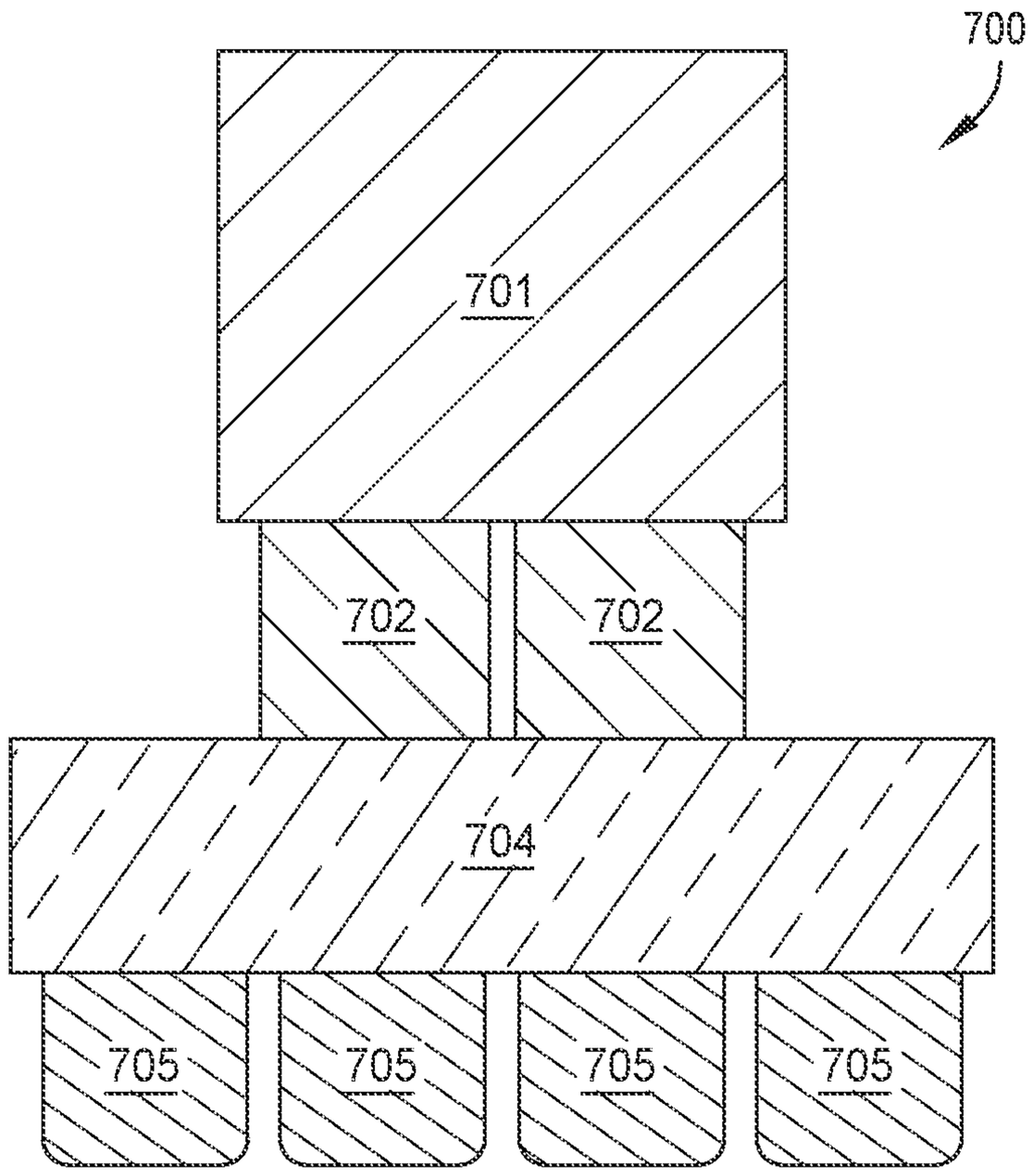

FIG. 7A

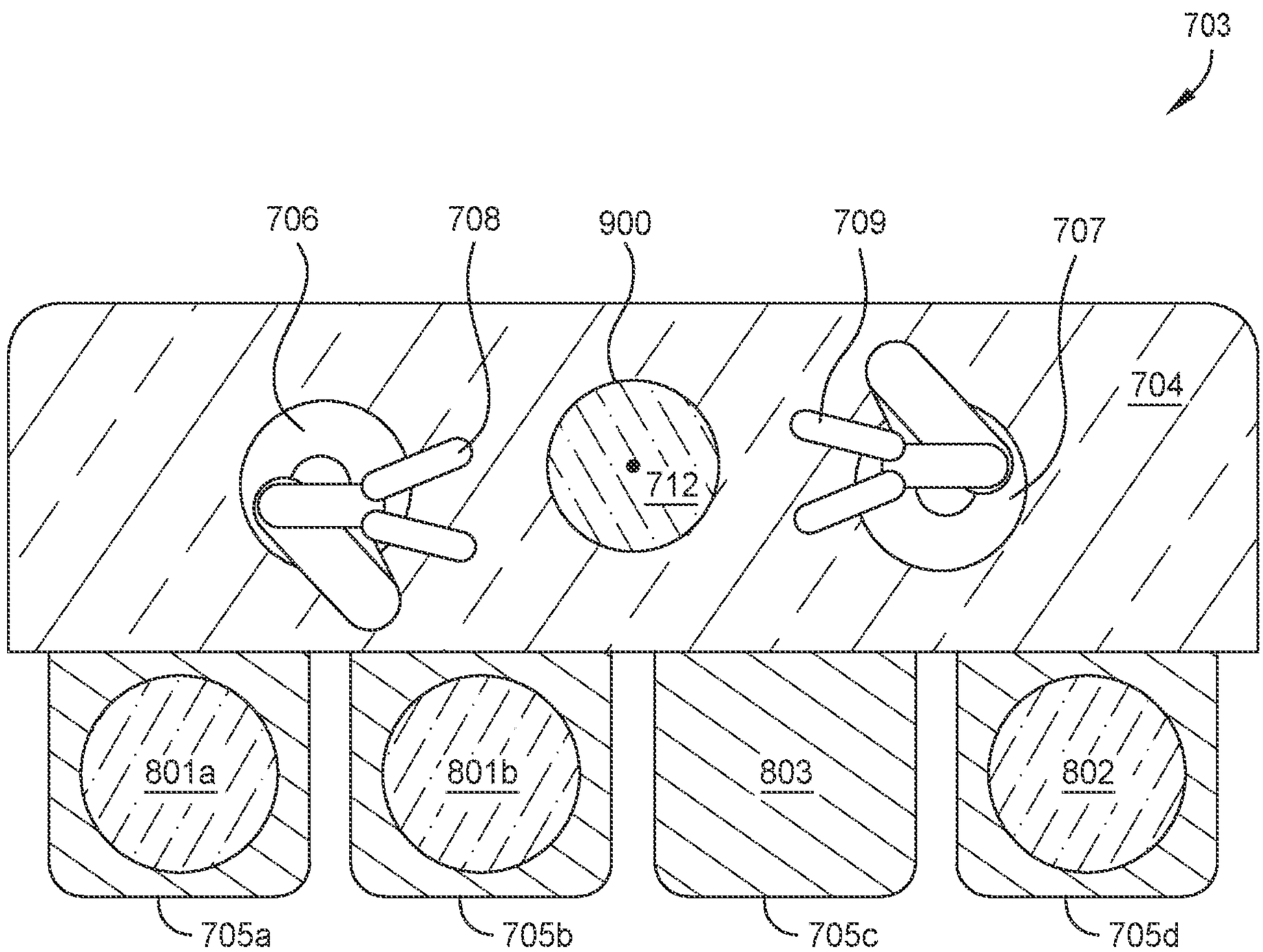
703
706
708
900
709
707
704
712
801a
801b
803
802
705a
705b
705c
705d

FIG. 7B

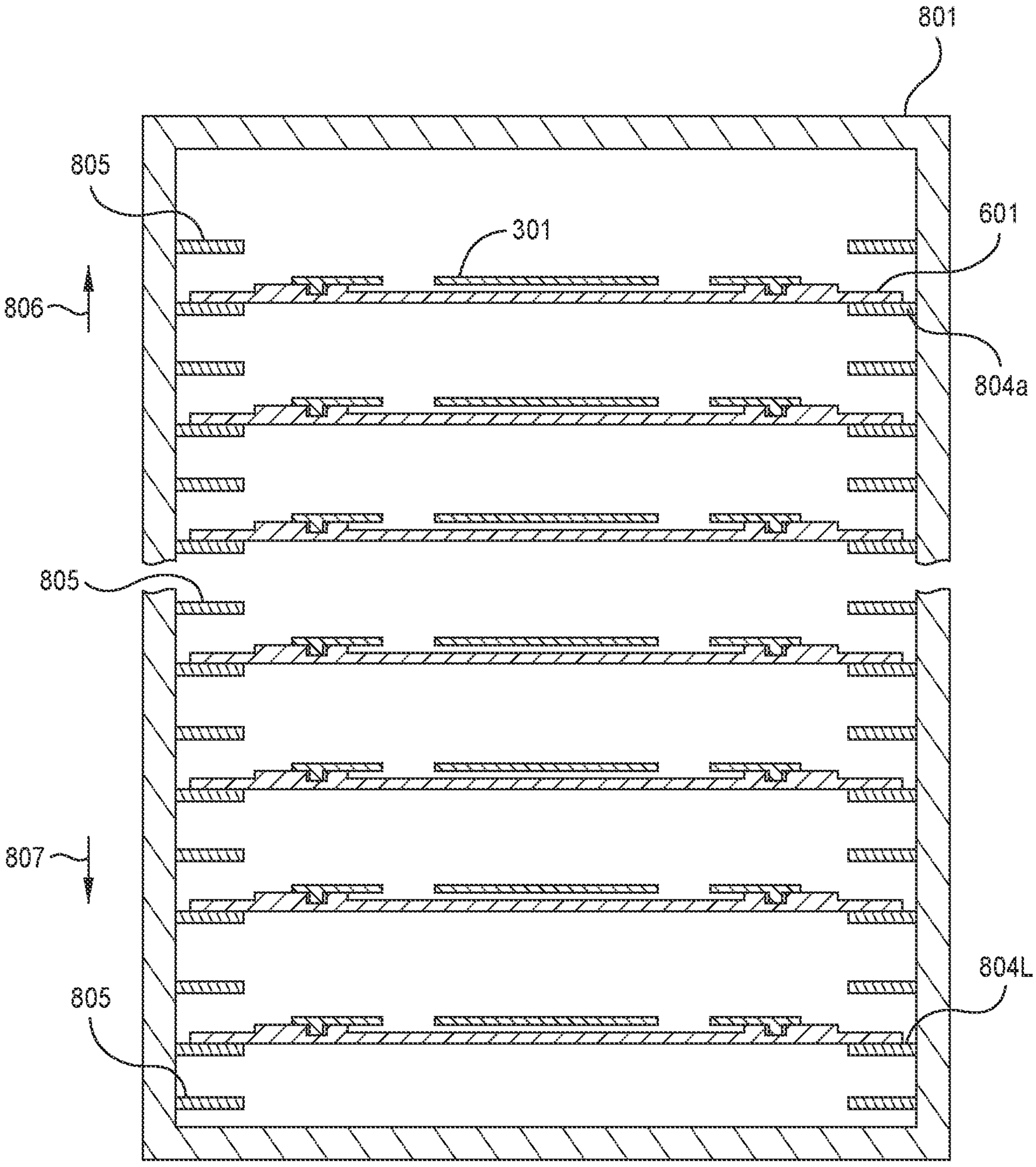

FIG. 8A

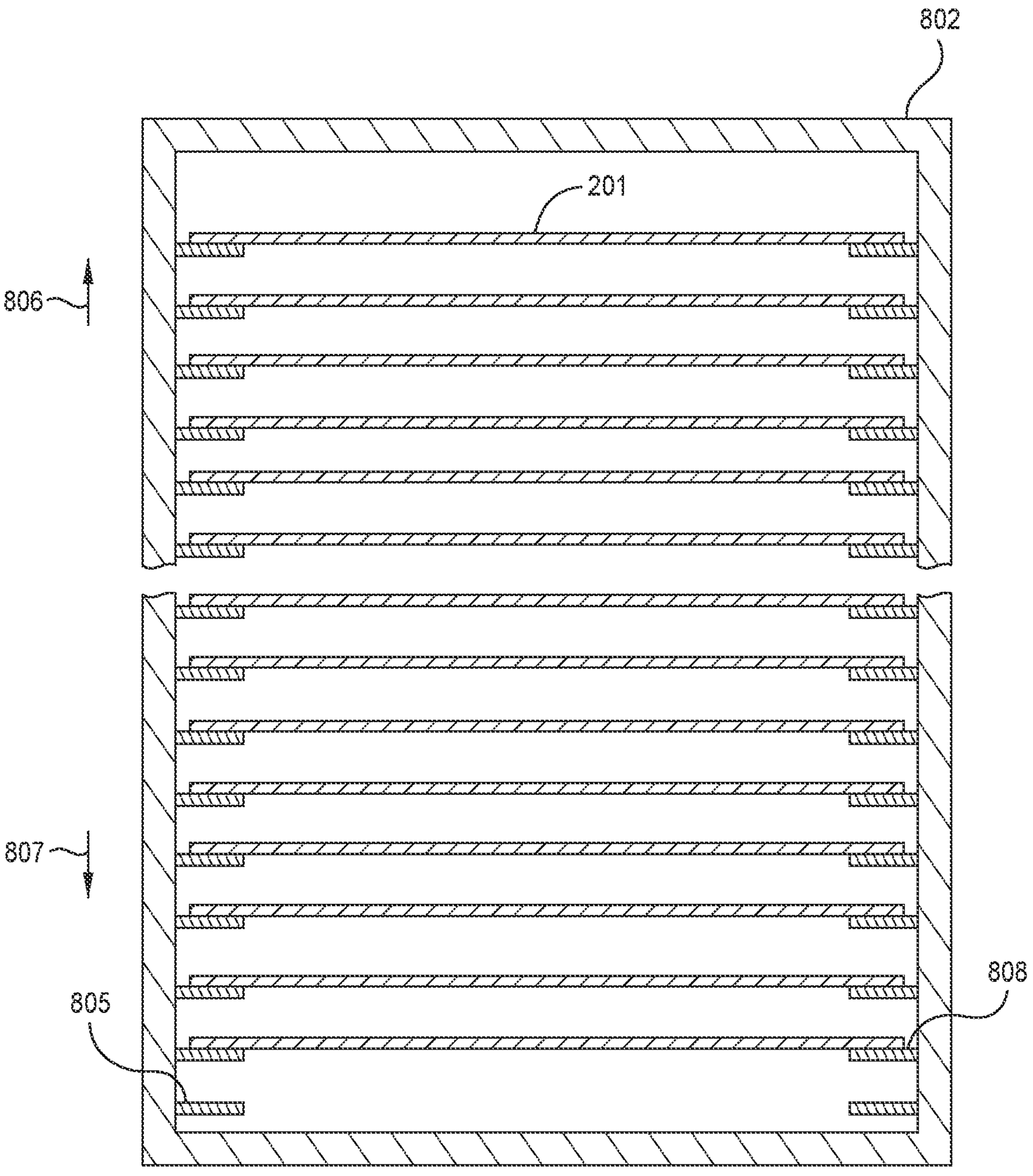

FIG. 8B

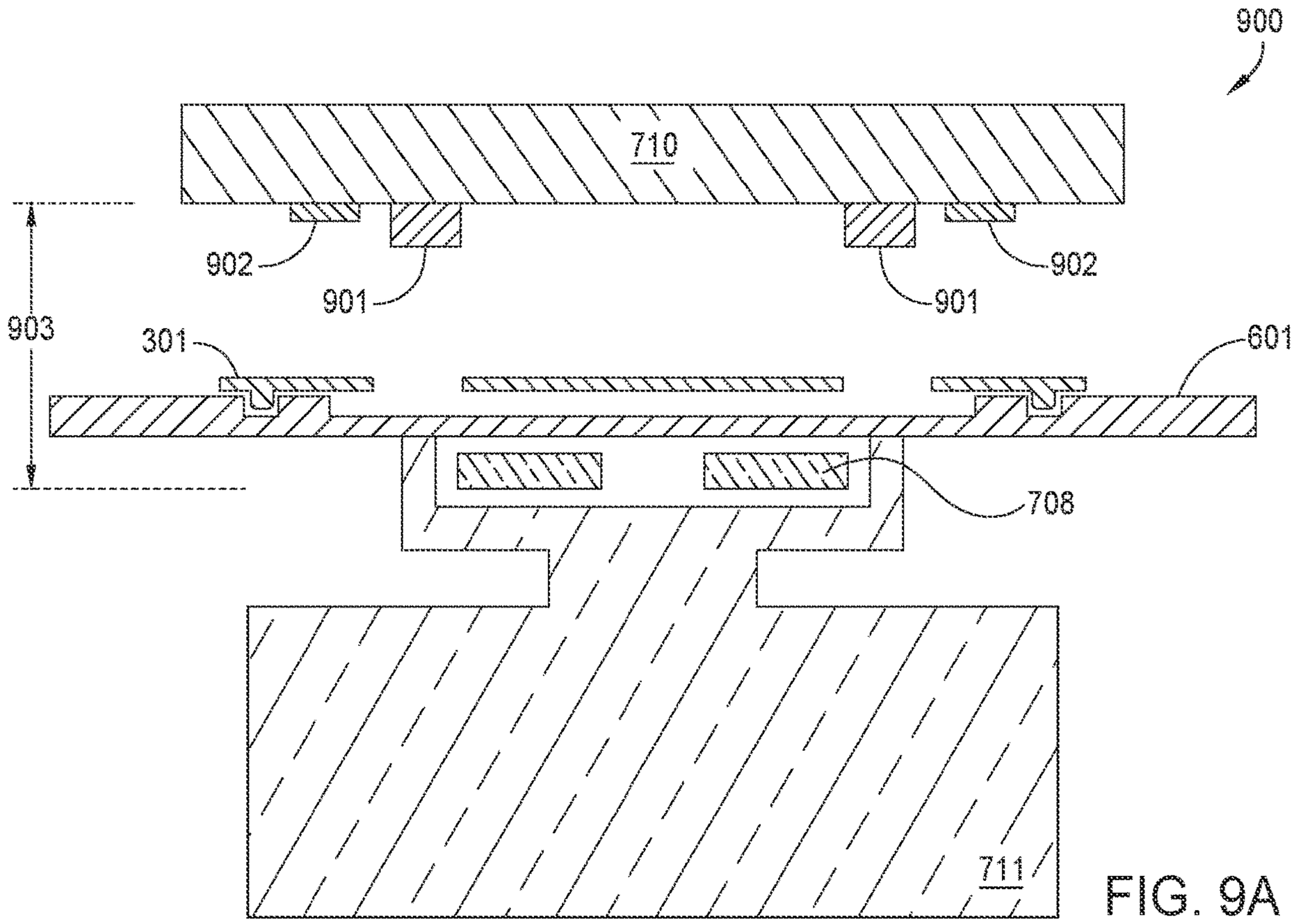
900
710
902
901
901
902
903
301
601
708
711

FIG. 9A

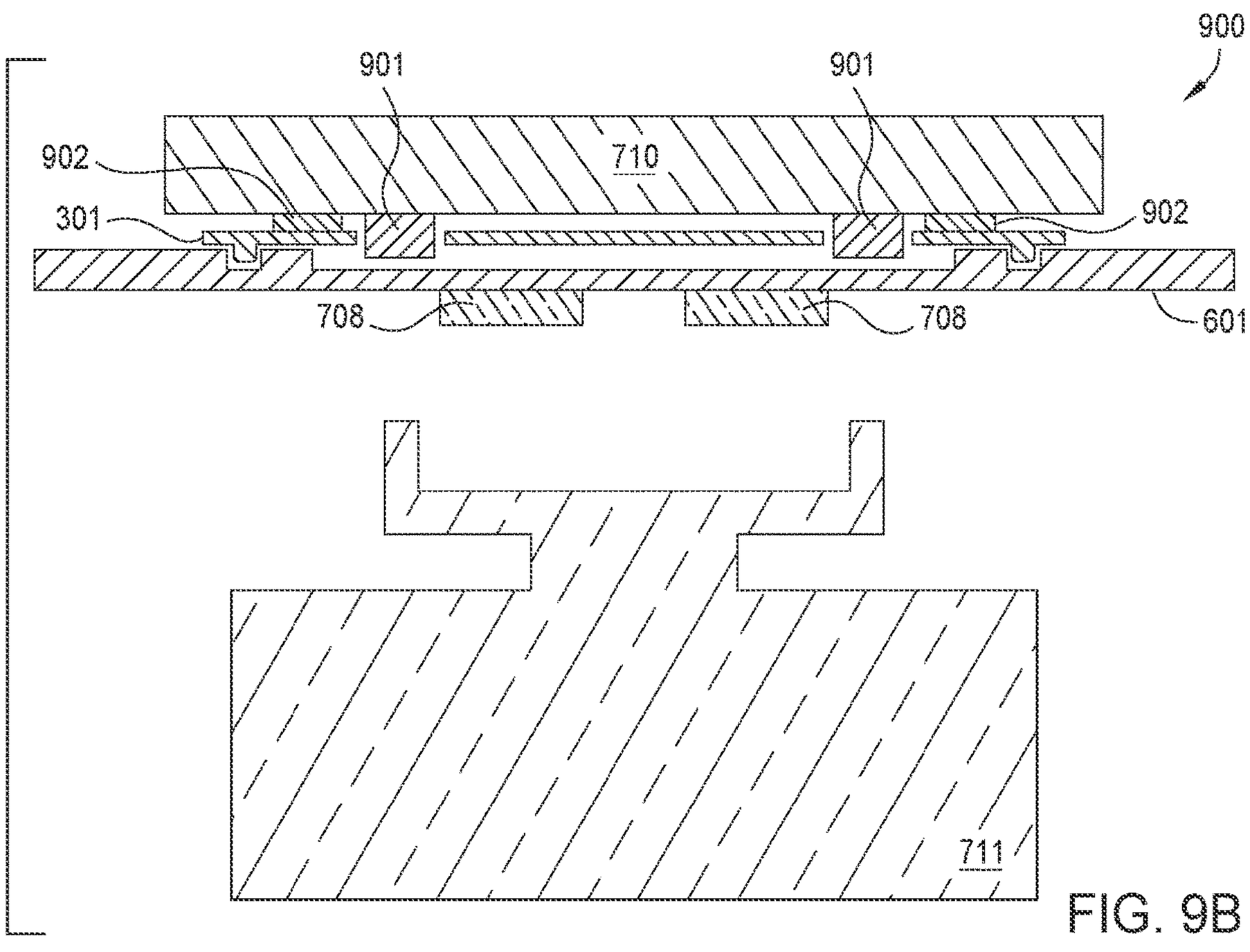
900
901
901
902
710
301
902
708
708
601
711

FIG. 9B

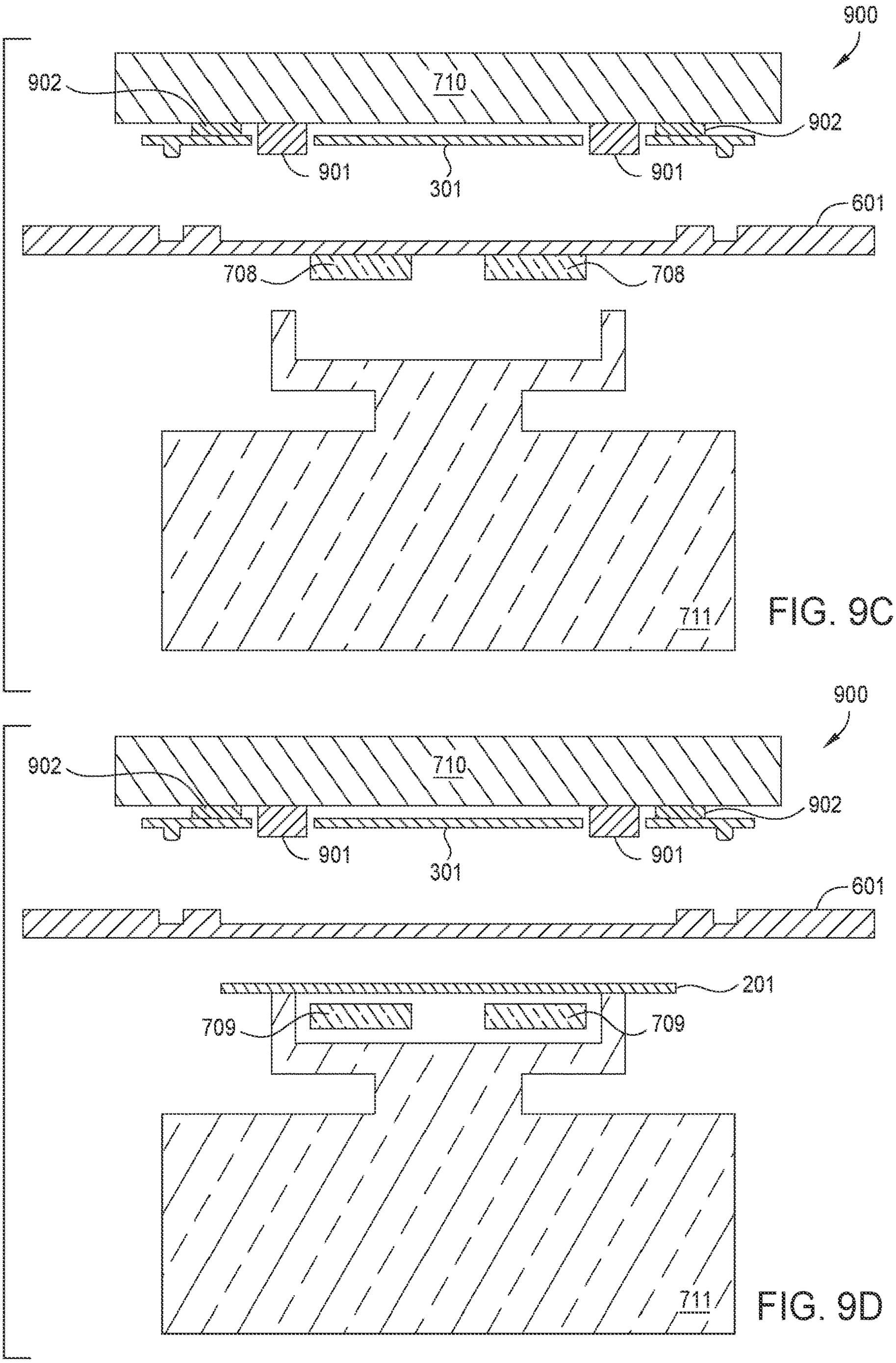
900
902
710
902
901
301
901
601
708
708
711
900
902
710
902
901
301
901
601
201
709
709
711

FIG. 9C

FIG. 9D

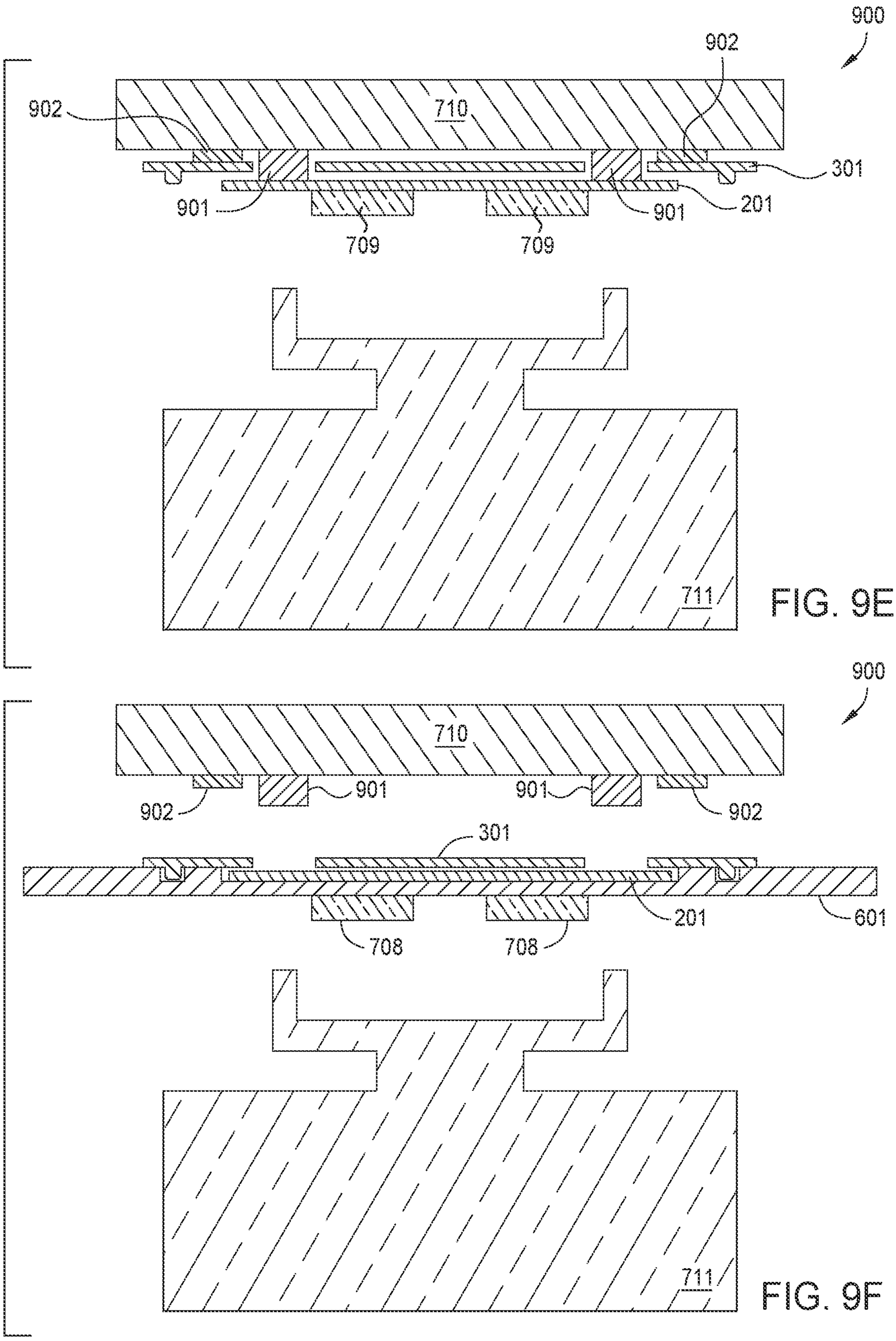
900
902
902
710
301
901
901
201
709
709
711

FIG. 9E

900
710
902
901
901
902
301
201
601
708
708
711

FIG. 9F

MULTI-DEPTH FILM FOR OPTICAL DEVICES

CROSS-REFERENCE TO RELATED APPLICATIONS

This application is a divisional of U.S. patent application Ser. No. 16/843,347, filed Apr. 8, 2020, which claims the benefit of U.S. Provisional Patent Application Ser. No. 62/832,752, filed Apr. 11, 2019, each of which is incorporated by reference herein in its entirety.

BACKGROUND

Field

Embodiments of the present disclosure generally relate to optical devices. More specifically, embodiments described herein provide for the formation of multi-depth films for the fabrication of optical devices.

Description of the Related Art

Optical devices may be used to manipulate the propagation of light by spatially varying structural parameters (e.g., shape, size, orientation) of structures of the optical devices formed on a substrate. The optical devices provide a spatially varying optical response that molds optical wavefronts as desired. These structures of the optical devices alter light propagation by inducing localized phase discontinuities (i.e., abrupt changes of phase over a distance smaller than the wavelength of the light). These structures may be composed of different types of materials, shapes, or configurations on the substrate and may operate based upon different physical principles.

Fabricating optical devices requires forming structures from a device material layer disposed on the substrate. However, the desired properties of an optical device to be fabricated may necessitate structures having various depths. Accordingly, what is needed in the art are methods for forming multi-depth films for the fabrication of optical devices.

SUMMARY

In one embodiment, a method is provided. The method includes disposing a base layer of a device material on a surface of a substrate. The base layer has a base layer depth. One or more mandrels of the device material are disposed on the base layer. The disposing the one or more mandrels includes positioning a mask over of the base layer. The mask has a first portion of a pattern of slots having a first masked depth and a second portion of the pattern of slots having a second masked depth. The first masked depth corresponds to mandrels having a first mandrel depth, and the second masked depth corresponds to mandrels having a second mandrel depth. The device material is deposited with the mask positioned over the base layer to form an optical device having the base layer with the base layer depth and the one or more mandrels having the first mandrel depth and the second mandrel depth.

In another embodiment, a method is provided. The method includes disposing a base layer of a device material on a surface of a substrate. The base layer has a base layer depth. One or more mandrels of the device material are disposed on the base layer. The disposing the one or more mandrels includes positioning a first mask over of the base layer and positioning a second mask over of the first mask. The first mask has a first pattern of slots having a first masked depth. The first masked depth corresponds to mandrels having a first mandrel depth. The second mask has a second pattern of slots having a second masked depth. The second masked depth corresponds to mandrels having a second mandrel depth. The device material is deposited with the first mask and second mask positioned over the base layer to form an optical device having the base layer with the base layer depth and the one or more mandrels having the first mandrel depth and the second mandrel depth.

In yet another embodiment, a method is provided. The method includes disposing a base layer of a device material on a surface of a substrate. The base layer has a base layer depth. A first patterned photoresist is disposed over the base layer. The first patterned photoresist has first openings and a first thickness corresponding to a first mandrel depth. The device material is deposited over the first patterned photoresist. The first patterned photoresist is removed to form one or more mandrels having the first mandrel depth. A second patterned photoresist is disposed over the base layer and the one or more mandrels having the first mandrel depth. The second patterned photoresist has second openings and a second thickness corresponding to a second mandrel depth. The device material is deposited over the second patterned photoresist. The second patterned photoresist is removed to form the one or more mandrels having the first mandrel depth and the second mandrel depth.

In another embodiment, a processing system comprises: a factory interface; a first actuator disposed within the factory interface; a second actuator disposed within the factory interface; an aligner station disposed within the factory interface; and a flipper device coupled to the factory interface.

In another embodiment, a method of assembling a carrier assembly comprises: inserting a carrier having a mask thereon into an alignment station; aligning the carrier and mask; separating the mask from the carrier; removing the carrier from the alignment station; inserting a substrate into the alignment station; contacting the substrate to the mask; and contacting the carrier to the substrate and mask to create a carrier assembly.

BRIEF DESCRIPTION OF THE DRAWINGS

So that the manner in which the above recited features of the present disclosure can be understood in detail, a more particular description of the disclosure, briefly summarized above, may be had by reference to embodiments, some of which are illustrated in the appended drawings. It is to be noted, however, that the appended drawings illustrate only exemplary embodiments and are therefore not to be considered limiting of its scope, and may admit to other equally effective embodiments.

FIG. **1** is a flow diagram of a method for forming a multi-depth film according to an embodiment.

FIGS. **2**A and **2**B are schematic, cross-sectional views of a substrate during a method for forming a multi-depth film according to an embodiment.

FIGS. **3**A and **3**B are schematic, cross-sectional views of a substrate positioned in a chamber during a method for forming a multi-depth film according to an embodiment.

FIG. **3**C is a schematic, top view of a first mask according to an embodiment.

FIG. **3**D is a schematic, top view of a second mask according to an embodiment.

FIG. **4** is a flow diagram of a method for forming a multi-depth film according to an embodiment.

FIGS. **5**A-**5**C are schematic, cross-sectional views of a substrate during a method for forming a multi-depth film according to an embodiment.

FIG. **6** is a cross-sectional view of a carrier assembly according to one embodiment.

FIGS. **7**A and **7**B are a schematic, top view of a processing system and offline build tool according to one embodiment.

FIGS. **8**A and **8**B are a schematic, cross-sectional view of loaded front opening unified pods according to one embodiment.

FIGS. **9**A-**9**F are schematic, cross-sectional views of the build tool in FIG. **7**B at various stages of operation.

To facilitate understanding, identical reference numerals have been used, where possible, to designate identical elements that are common to the figures. It is contemplated that elements and features of one embodiment may be beneficially incorporated in other embodiments without further recitation.

DETAILED DESCRIPTION

Embodiments of the present disclosure relate to forming multi-depth films for the fabrication of optical devices. FIG. **1** is a flow diagram of a method **100** for forming a multi-depth film **200**. FIGS. **2**A and **2**B are schematic, cross-sectional views of a substrate **201** during the method **100** for forming the multi-depth film **200**.

At operation **101**, as shown in FIG. **2**A, a base layer **202** of device material is disposed on a surface **203** of a substrate **201**. The substrate **201** may also be selected to transmit a suitable amount of light of a desired wavelength or wavelength range, such as one or more wavelengths in the infrared region to UV region (i.e., from about 700 to about 1500 nanometers). Without limitation, in some embodiments, the substrate **201** is configured such that the substrate **201** transmits greater than or equal to about 50%, 50%, 70%, 80%, 90%, 95%, 99%, to UV region of the light spectrum. The substrate **201** may be formed from any suitable material, provided that the substrate **201** can adequately transmit light in a desired wavelength or wavelength range and can serve as an adequate support for the optical devices. In some embodiments, which can be combined with other embodiments described herein, the material of substrate **201** has a refractive index that is relatively low, as compared to the refractive index of the device material. Substrate selection may include substrates of any suitable material, including, but not limited to, amorphous dielectrics, crystalline dielectrics, silicon oxide, polymers, and combinations thereof. In some embodiments, which can be combined with other embodiments described herein, the substrate **201** includes a transparent material. In one embodiment, which can be combined with other embodiments described herein, the substrate **201** is transparent with absorption coefficient smaller than 0.001. Suitable examples may include an oxide, sulfide, phosphide, telluride or combinations thereof.

In one embodiment, which can be combined with other embodiments described herein, disposing the base layer **202** of device material over the surface **203** of the substrate **201** includes, but is not limited to, one or more of a liquid material pour casting process, a spin-on coating process, a liquid spray coating process, a dry powder coating process, a screen printing process, a doctor blading process, a physical vapor deposition (PVD) process, a chemical vapor deposition (CVD) process, a plasma-enhanced (PECVD) process, a flowable CVD (FCVD) process, and an atomic layer deposition (ALD) process. In another embodiment, which can be combined with other embodiments described herein, the material layer includes, but is not limited to, titanium dioxide (TiO_2), zinc oxide (ZnO), tin dioxide (SnO_2), aluminum-doped zinc oxide (AZO), fluorine-doped tin oxide (FTO), cadmium stannate (tin oxide) (CTO), and zinc stannate (tin oxide) ($SnZnO_3$), silicon nitride (Si_3N_4), and amorphous silicon (a-Si) containing materials. The base layer **202** has a base layer thickness **204** from the base layer **202** to the surface **203** of the substrate **201**.

At operation **102**, as shown in FIG. **2**B, one or more mandrels **208** of device material are disposed on the base layer **202** to form the multi-depth film **200**. In one embodiment, which can be combined with other embodiments described herein, operation **102**, as shown in FIG. **3**A, includes positioning a mask **301**, such as a shadow mask, over the substrate **201** and depositing the device material. Depositing the device material may include, but is not limited to, one or more of a PVD process, a CVD process, a PECVD process, a FCVD process, or an ALD process. The depositing the device material may be performed in a deposition chamber operable under vacuum pressure.

The mask **301** includes a pattern of slots **302** disposed through the mask **301**. A first portion **304** of the pattern of slots **302** has a first masked depth **308** and a second portion **306** of the pattern of slots **302** has a second masked depth **310**. The first portion **304** of the pattern of slots **302** having the first masked depth **308** forms one or more mandrels **208** having a first mandrel depth **210**. The first mandrel depth **210** is a distance from a top surface **212** of the mandrels **208** having the first mandrel depth **210** to the base layer **202**. The second portion **306** of the pattern of slots **302** having the second masked depth **310** forms one or more mandrels **208** having a second mandrel depth **211**. The second mandrel depth **211** is a distance from a top surface **214** of the mandrels **208** having the second mandrel depth **211** to the base layer **202**. As shown in FIG. **2**B, the multi-depth film **200** includes the base layer **202** having the base layer thickness **204** and one or more mandrels **208** having the first mandrel depth **210** and the second mandrel depth **211**. In one embodiment, which can be combined with other embodiments described herein, the multi-depth film **200** includes alignment marks (not shown) formed thereon for further processing, such as for patterning and/or etching the multi-depth film **200** to form structures of the device material on the substrate **201**.

In one embodiment, which can be combined with other embodiments described herein, as shown in FIGS. **3**A and **3**B, the substrate **201** is retained on a substrate support **303**. The substrate support **303** includes a clamp ring **305** capable of retaining the substrate **201** on the substrate support **303** without contacting the base layer **202** and the mandrels **208**. In one embodiment, which can be combined with other embodiments described herein, the mask **301** assembled into the clamp ring **305** and exchanged at intervals based on a rate of accumulation of deposited device material changing the dimensions of the windows (e.g. slots **302**) in the mask **301**.

In another embodiment, which can be combined with other embodiments described herein, the mask **301** is formed from a substrate sized disk with an adhesive applied to the outer perimeter of the disk. This adhesive allows the substrate **201** to attach to the underside of the clamp ring **305**. After the mask **301** has accumulated the maximum tolerable deposited device material, a heater in the chamber would be heated to a temperature which eliminates the

adhesive force of the adhesive, releasing the substrate **201** to be retrieved and exchanged at load locks coupled to the chamber. In one embodiment, which can be combined with other embodiments described herein, the mask **301** may be loaded into a shutter disk area. A mechanism may attach the mask **301** to the clamp ring **305**. A release mechanism may release the mask **301** attached to the underside of the clamp ring **305**.

The substrate support **303** is coupled to a stem **307** which extends through the chamber body **309**. The stem **307** is connected to a lift system (not shown) that moves the substrate support **303** between a processing position (as shown) and a transfer position (not shown) to facilitate transfer of the substrate **201**. The mask **301** may include openings (not shown) to align the mask **301** with the substrate **201** and mask supports **311** coupled to one or more actuators **313** of a chamber body **309**. The one or more actuators **313** control movement of the mask supports **311** to align the mask **301** (or the first mask **315** and the second mask **317** of FIG. **3**B) with the substrate **201**. The mask **301** may also prevent deposition of device material on edges **205** of the substrate **201** during operation **102**.

In one embodiment, which can be combined with other embodiments described herein, the mask **301** is tape mask. The tape mask may include a polymer sheet, such as polyimide. The tape mask may be wound on a spool. At operation **102**, the tape mask is feed through a feed mechanism that brings the tape in close contact with the substrate **201**. A first mechanism is used to attach the tape mask to the substrate **201**, such as static electric charge or an adhesive. A second mechanism, such as a roller or picture frame, is used to place the tape mask onto the substrate **201** in a controlled fashion. In one embodiment, which can be combined with other embodiments described herein, the tape mask is pre-patterned before being wound onto the roll. In another embodiment, which can be combined with other embodiments described herein, a laser scribing station is used to create any of a variety of mask patterns.

In one embodiment, which can be combined with other embodiments described herein, operation **102**, as shown in FIGS. **3**B, **3**C, and **3**D, includes positioning a first mask **315** and a second mask **317** over the substrate **201** and depositing the device material. The depositing the device material may be performed with both the first mask **315** and the second mask **317** positioned over the substrate **201**. The depositing the device material may be performed with the first mask **315** positioned over the substrate **201** and subsequently with the second mask **317** positioned over the substrate **201**. Utilizing the first mask **315** and the second mask **317** forms the multi-depth film **200** including the base layer **202** having the base layer thickness **204** and one or more mandrels **208** having the first mandrel depth **210** and the second mandrel depth **211**.

The first mask **315** includes a pattern of slots **314** disposed through the first mask **315**. The pattern of slots **314** has a first masked depth **316**. The pattern of slots **314** having the first masked depth **316** forms one or more mandrels **208** having the first mandrel depth **210**. The second mask **317** includes a pattern of slots **318** disposed through the second mask **317**. The pattern of slots **318** has a second masked depth **320**. The pattern of slots **318** align with a portion of the pattern of slots **314**. In one embodiment, which can be combined with other embodiments described herein, the pattern of slots **318** overlap with the portion of the pattern of slots **314**. The pattern of slots **318** aligned with the portion of the pattern of slots **314** forms one or more mandrels **208** having the second mandrel depth **211**. The first mask **315** and the second mask **317** may include openings **319** to align the first mask **315** and the second mask **317** with the substrate **201** and mask supports **311** coupled to one or more actuators **313** of the chamber body **309**.

In one embodiment, which can be combined with other embodiments described herein, a gantry system is used to pick at least one substrate **201** from a conveyor belt and place each substrate **201** into a receiving area of a clamshell mask applicator. The clamshell mask applicator may be equipped with alignment capability and multiple masks (e.g., the first mask **315** and the second mask **317**) may be aligned over the substrate **201**. In one embodiment, which can be combined with other embodiments described herein, a bottom mask (e.g., the first mask **315**) may have features patterned thereon and blank off patches may be affixed to the bottom mask. The blank off patches may be removed sequentially during the method **100**.

FIG. **4** is a flow diagram of a method **400** for forming a multi-depth film **500**. FIGS. **5**A-**5**C are schematic, cross-sectional views of a substrate **201** during the method **400** for forming the multi-depth film **500**.

At operation **401**, a first patterned photoresist **502** is disposed over the base layer **202** of the device material disposed on a surface **203** of a substrate **201**. The base layer **202** of the device material is disposed on a surface **203** of a substrate **201** as described in operation **101** of the method **100**. The first patterned photoresist **502** is formed by disposing a photoresist material over the base layer **202** and performing a lithography process. The first patterned photoresist **502** includes first openings **504** corresponding to one or more mandrels **208** to be formed having the first mandrel depth **210**. The first patterned photoresist **502** has a first thickness **506** corresponding to the first mandrel depth **210**.

At operation **402**, the device material is deposited over the first patterned photoresist **502** and the first patterned photoresist **502** is removed to form one or more mandrels **208** having the first mandrel depth **210**. Removing the first patterned photoresist **502** may include a lithography process or etching process. At operation **403**, a second patterned photoresist **508** is disposed over the base layer **202** and the one or more mandrels **208** having the first mandrel depth **210**. The second patterned photoresist **508** is formed by disposing a photoresist material over the base layer **202** and performing a lithography process. The second patterned photoresist **508** includes second openings **512** aligning with a portion of the one or more mandrels **208** having the first mandrel depth **210**. The aligning second openings **512** with the portion of the one or more mandrels **208** having the first mandrel depth **210** will form one or more mandrels **208** having the second mandrel depth **211** after operation **403**. The second patterned photoresist **508** has a second thickness **510** that combined with the first mandrel depth **210** corresponds to the second mandrel depth **211**.

At operation **404**, the device material is deposited over the second patterned photoresist **508** and the second patterned photoresist **508** is removed to form one or more mandrels **208** having the second mandrel depth **211**. Removing the second patterned photoresist **508** may include a lithography process or etching process. Removing the second patterned photoresist **508** forms the multi-depth film **500** that includes the base layer **202** having the base layer thickness **204** and the one or more mandrels **208** having the first mandrel depth **210** and the second mandrel depth **211**.

FIG. **6** is a schematic view of carrier assembly **600** according to one embodiment. The carrier assembly **600** consists of carrier **601**, the substrate **201**, and the clamp ring or mask **301**. The carrier assembly **600** is used for supporting

and transporting the substrate **201** during processing. The carrier **601** supports the substrate **201** on the outer edges of the substrate as to not damage the backside of the substrate **201**. In one embodiment, the carrier **601** is a 300 mm carrier. In one embodiment, the substrate **201** is a 200 mm substrate and the mask **301** is a 200 mm mask. In another embodiment, the substrate **201** is a 300 mm substrate and the mask is a 300 mm mask.

FIG. **7**A is a schematic view of a processing system **700**. The processing system **700** includes a transfer chamber **701** coupled to a load lock **702**. It is to be understood that while two load locks **702** are shown in FIG. **7**A, it is contemplated that a single load lock **702** may be used or even more than two load locks **702** may be used. Thus, the embodiments discussed herein are not to be limited to two load locks **702**. Load locks **702** are coupled to factory interface **704**. Load port stations **705** are coupled to factory interface **704**. In one embodiment, as pictured in FIG. **7**A, four load port stations **705** are present. It is to be understood that while four load port stations **705** are shown in FIG. **7**A, it is contemplated that any number of load port stations **705** may be used. Thus, the embodiments discussed herein are not to be limited to four load port stations **705**. In one embodiment, the process system **700** may be an etch process chamber. In another embodiment, the process system **700** may be a PVD process chamber. The load port stations **705** will contain one or more carrier assemblies **600**. The carrier assemblies will be assembled at a location separate from the load port stations **705** and the factory interface **704**.

The carrier assemblies **600** will be assembled in an offline build station **703**. Build station **703** is used to build and unbuild one or more carrier assemblies **600** in an automated form. Building a carrier assembly **600** automatically is more efficient, both timely and costly, and prevents potential particle damage or breakage. Building a carrier assembly **600** automatically also produces a higher quality product than if the carrier assembly **600** were to be built manually.

FIG. **7**B is a detailed schematic view of the offline build station **703**. The build station **703** is utilized to assemble the carrier assembly **600**. The offline build station **703** has factory interface **704** and load port stations **705***a*-**705***d*. Front opening unified pods (FOUPs) **801***a* and **801***b* are located at load port stations **705***a* and **705***b*, respectively. FOUP **802** is located at load port station **705***d*. Flipper device **803** is located at load port station **705***c*. Two actuators **706** and **707** are disposed within the factory interface **704**. In one embodiment, the actuator **706** is Applied Materials 300 mm SCARA Robot and actuator **707** is Applied Materials 200 mm SCARA Robot. Actuators **706** and **707** are independent of one another. The actuators **706**, **707** have actuator arms **708** and **709**. The arms **708**, **709** enable the actuators **706**, **707** to receive and transport the components of carrier assembly **600**. Vacuum chuck **710** and aligner **711** are positioned at aligner station **900** between actuators **706**, **707** in the factory interface **704**.

FIGS. **8**A and **8**B are cross-sectional views of FOUPs **801** and **802**. FIG. **8**A represents FOUP **801**. FOUP **801** is loaded with carriers **601** and masks **301**. FOUP **801** is a 300 mm FOUP. A generic FOUP is a cassette with twenty-five slots. FOUP **801** is skip-loaded utilizing every other slot of the twenty-five slots. Slots **804***a-l* represent loaded slots of FOUP **801**. Slots **805** represent empty slots. Each FOUP **801** is loaded with twelve carrier assemblies **600**. FIG. **8**B represents FOUP **802**. FOUP **802** is loaded with substrates **201**. In one embodiment, FOUP **802** is a 300 mm FOUP. In another embodiment, FOUP **802** is a 200 mm substrate FOUP. FOUP **802** is loaded with twenty-four substrates **201**.

Aligner **711** is utilized to orient mask **301**, substrate **201**, and carrier **601** in the XY direction. Aligner **711** is capable of rotating 360 degrees. The aligner **711** rotates the mask **301**, substrate **201**, or carrier **601** to find the center **712** of the mask **301**, substrate **201**, and carrier **601**. The aligner **711** is able to locate the center **712** of the mask **301**, substrate **201**, or carrier **601** with accuracy of about 0.001 in. The aligner **711** is capable of aligning either 200 mm substrates or 300 mm substrates. In one embodiment, the mask **301**, substrate **201**, and carrier **601** are aligned by openings **319**, as depicted in FIGS. **3**C and **3**D. As discussed below, the aligner **711** includes a vacuum chuck **710**. The vacuum chuck **710** has inner region **901** and outer region **902**. Inner region **901** is configured to chuck substrate **201**. Outer region **902** is configured to chuck mask **301**.

FIGS. **9**A-**9**F are schematic, cross-sectional views of various stages of an exemplary embodiment of build station **703** building carrier assembly **600**. FIG. **9**A depicts the process beginning. The process begins by actuator **706** extending actuator arms **708** into FOUP **801***a*. It receives a mask **301** and carrier **601** by extending arms **708** below carrier **601**. The arms **708** transport the mask **301** and carrier **601** to the aligner **711**. Actuator **706** places mask **301** and carrier **601** on aligner **711** and then actuator **706** retracts arms **708**. Aligner **711** aligns mask **301** and carrier **601**. Actuator **706** extends arms **708** under the now aligned mask **301** and carrier **601**. Actuator arms **708** lift mask **301** and carrier **601** a distance **903** to vacuum chuck **710**, as depicted in FIG. **9**B. Distance **903** is a pre-calibrated distance. Vacuum chuck **710** engages the outer region **902** and chucks mask **301** to the vacuum chuck **710**. With the mask **301** chucked to the vacuum chuck **710**, actuator arms **708** lower the carrier **601**, as depicted in FIG. **9**C. Once lowered, actuator arms **708** retract with carrier **601**.

Actuator **707** extend actuator arms **709** into FOUP **802**. Arms **709** receive substrate **201**. Arms **709** transport the substrate **201** to the aligner **711**. Actuator **707** retract arms **709** while aligner **711** aligns substrate **201**. Arms **709** extend below the now aligned substrate **201**, as depicted in FIG. **9**D. As depicted in FIG. **9**E, arms **709** lift substrate **201** the distance **903** to the vacuum chuck **710**. Vacuum chuck **710** engages the inner region **901** and chucks the substrate **201** to the vacuum chuck **710**. Actuator arms **709** now lower and retract. Actuator arms **708** now extend carrier **601**. Arms **708** lift carrier **601** the distance **903** to vacuum chuck **710**. The inner region **901** of vacuum chuck **710** release the substrate **201**. The outer region **902** of vacuum chuck **710** release the mask **301**. As depicted in FIG. **9**F the now fully assembled carrier assembly **600** is lowered by arms **708**. Actuator arms **708** retract carrier assembly **600** and return the full carrier assembly **600** to FOUP **801***a*. Actuator arms **708** are now able to retrieve another mask **301** and carrier **601** assembly from FOUP **801***a*. Moving in the downward direction **806**, actuator arms retrieve the next mask **301** and carrier **601** are received from the next slot. The build process disclosed above is repeated until all assemblies of FOUP **801***a* are complete. Once all assemblies **600** of FOUP **801***a* are complete, the process is repeated for FOUP **801***b*. The process depicted in FIGS. **9**A-**9**F results in fully assembled carrier assemblies **600** in FOUPs **801***a* and **801***b*.

The process disclosed above may also be completed without mask **301**. The process begins by actuator **706** extending actuator arms **708** into FOUP **801***a*. It receives a carrier **601** by extending arms **708** below carrier **601**. The arms **708** transport the carrier **601** to the aligner **711**. Actuator **706** places carrier **601** on aligner **711** and then

actuator **706** retracts arms **708**. Aligner **711** aligns carrier **601**. Once aligned, actuator arms **708** retract with carrier **601**.

Actuator **707** extend actuator arms **709** into FOUP **802**. Arms **709** receive substrate **201**. Arms **709** transport the substrate **201** to the aligner **711**. Actuator **707** retract arms **709** while aligner **711** aligns substrate **201**. Arms **709** extend below the now aligned substrate **201**. Arms **709** lift substrate **201** the distance **903** to the vacuum chuck **710**. Vacuum chuck **710** engages the inner region **901** and chucks the substrate **201** to the vacuum chuck **710**. Actuator arms **709** now lower and retract. Actuator arms **708** now extend carrier **601**. Arms **708** lift carrier **601** the distance **903** to vacuum chuck **710**. The inner region **901** of vacuum chuck **710** release the substrate **201**. Substrate **201** and carrier **601** are lowered by arms **708**. Actuator arms **708** retract substrate **201** and carrier **601** and return the substrate **201** and carrier **601** assembly to FOUP **801***a*. Actuator arms **708** are now able to retrieve another carrier **601** from FOUP **801***a*. Moving in the downward direction **806**, actuator arms retrieve the next carrier **601** from the next slot. The build process disclosed above is repeated until all assemblies of FOUP **801***a* are complete. Once all assemblies of FOUP **801***a* are complete, the process is repeated for FOUP **801***b*. The process disclosed above results in fully assembled substrate **201** and carrier **601** assemblies in FOUPs **801***a* and **801***b*. It is to be understood that while the embodiment describes aligning the carrier **601**, aligning the substrate **201**, and then assembling the carrier **601** and substrate **201** as an assembly, aligning the substrate **201** may occur prior to aligning the carrier **601** such that the substrate **201** is coupled to the vacuum chuck **710** while the carrier **601** is aligned.

Often, a substrate **201** needs to be processed on the front side and the backside. Flipper device **803** allows a substrate **201** to be flipped automatically so that substrate **201** may be processed on the backside in subsequent processes. Actuator **706** extend arms **708** into FOUP **801***a* and receive a carrier assembly **600** from slot **804***a*. Actuator arms **708** place carrier assembly **600** on aligner **711**. Actuator **706** retracts arms **708**. Aligner **711** orients assembly **600**. Arms **708** receive aligned assembly **600** and lift assembly **600** predetermined distance **903** towards vacuum chuck **710**. Vacuum chuck **710** engages the inner region **901** to chuck substrate **201** and outer region **902** to chuck mask **301**. Leaving substrate **201** and mask **301** behind, arms **708** lower carrier **601**. Actuator **706** retracts arms **708** and carrier **601**. Actuator **707** extends arms **709** below vacuum chuck **710**. Arms **708** lift distance **903** to receive substrate **201** on vacuum chuck **710**. Vacuum chuck **710** turns off the inner region **901**, releasing substrate **201**. Arms **709** lower substrate **201**. Actuator **707** extend arms **709** to place substrate **201** into flipper device **803**. Actuator **707** retracts arms **709**. Flipper device **803** flips substrate **201** 180 degrees to the backside of substrate **201**. Arms **709** extend into flipper device **803** and receive substrate **201**. Actuator arms **709** transport substrate **201** to aligner **711**. Actuator **707** retracts arms **709** and aligner **711** aligns substrate **201**. Arms **709** receive aligned substrate **201** and lift substrate **201** distance **903** to vacuum chuck **710**. Vacuum chuck **710** engages inner region **901** to chuck substrate **201**. Actuator **707** lowers and retracts arms **709**. Actuator **706** extends arms **708** and carrier **601** below vacuum chuck **710**. Arms **708** lift carrier **601** to vacuum chuck **710**. Vacuum chuck **710** disengages inner region **901** and outer region **902** releasing substrate **201** and mask **301** onto carrier **601**. Actuator arms **708** lower the full carrier assembly **600**. Actuator arms **708** extend into FOUP **801***a* and place the full carrier assembly **600** back into slot **804***a*. The build process disclosed above is repeated until all assemblies of FOUP **801***a* are complete. Once all assemblies **600** of FOUP **801***a* are complete with flipped substrates **201**, the process is repeated for FOUP **801***b*. The process disclosed above results in fully assembled carrier assemblies **600** with flipped substrates **201** in FOUPs **801***a* and **801***b*. The carrier assemblies **600** are then ready to process substrates **201** on the backside. The process disclosed above may also be completed without mask **301**, resulting in assemblies with carrier **601** and flipped substrate **201**.

In another embodiment, the build station **703** is utilized to unbuild carrier assemblies **600**. The mask **301** and carrier **601** are able to be reused for multiple processing sequences. The unbuild process begins with FOUPs **801***a* and **801***b* loaded with complete carrier assemblies **600**. In one embodiment, the substrate **201** has the front side processed. In another embodiment, the substrate **201** has the front side and back side processed. The actuator arms **708** extend into FOUP **801***a* and receive the carrier assembly **600** from slot **808**. Actuator arms **708** place carrier assembly **600** onto aligner **711**. Actuator **706** retracts arms **708** and aligner **711** aligns assembly **600**. Arms **708** extend to receive assembly **600**. Arms **708** raise assembly **600** distance **903** to vacuum chuck **710**. Vacuum chuck **710** engages the inner region **901** to chuck the substrate **201** and the outer region **902** to chuck the substrate **201**. Actuator **706** then lowers and retracts arms **708** with carrier **601**. Actuator **707** extends arms **709** below vacuum chuck **710**. Arms **709** are lifted distance **903** to substrate **201** on vacuum chuck **710**. Vacuum chuck **710** disengages the inner region **901** releasing substrate **201** onto actuator arms **709**. Actuator arms **709** lower substrate **201** and extend into FOUP **802**. The substrate **201** is placed into the lowest slot **808***x* of FOUP **802**. Arms **708** then extend carrier **601** below vacuum chuck **710**. Arms **708** lift carrier **601** distance **903** to vacuum chuck **710** to receive mask **301**. Vacuum chuck **710** disengages outer region **902** releasing mask **301** onto carrier **601**. Actuator arms **708** lower mask **301** and carrier **601** assembly and place mask **301** and carrier **601** into slot **804**L.

Once assemblies **600** of FOUP **801***a* are fully unbuilt, the process is repeated for FOUP **801***b*. The process is repeated until all carrier assemblies **600** of FOUPs **801***a* and **801***b* have been unbuilt. The result of the unbuild process described above is FOUPs **801***a* and **801***b* loaded with mask **301** and carrier **601** and FOUP **802** loaded with processed substrates **201**. During the unbuild process, carrier assemblies **600** are unloaded from FOUPs **801***a* and **801***b* in direction **807** and substrates **201** are loaded into FOUP **802** in direction **807**. The process disclosed above may also be completed without mask **301**, resulting in carrier FOUPS **801***a* and **801***b* loaded with carrier **601** and FOUP **802** loaded with processed substrates **201**.

In one embodiment, a method comprises: disposing a base layer of a device material on a surface of a substrate, the base layer having a base layer depth; and disposing one or more mandrels of the device material on the base layer, wherein the disposing the one or more mandrels comprises: positioning a mask over of the base layer, the mask having: a first portion of a pattern of slots having a first masked depth, the first masked depth corresponding to mandrels having a first mandrel depth; and a second portion of the pattern of slots having a second masked depth, the second masked depth corresponding to mandrels having a second mandrel depth; and depositing the device material with the mask positioned over the base layer to form an optical device having the base layer with the base layer depth and the one or more mandrels

having the first mandrel depth and the second mandrel depth. The device material is deposited by PVD. The device material is deposited by CVD. The device material is deposited by ALD. The mandrels comprise titanium dioxide (TiO_2), zinc oxide (ZnO), tin dioxide (SnO_2), aluminum-doped zinc oxide (AZO), fluorine-doped tin oxide (FTO), cadmium stannate (tin oxide) (CTO), and zinc stannate (tin oxide) ($SnZnO_3$), silicon nitride (Si_3N_4), and amorphous silicon (a-Si) containing materials. The first mandrel depth is greater than the second mandrel depth. The first masked depth is greater than the second masked depth.

In another embodiment, a processing system comprises: a factory interface; a first actuator disposed within the factory interface; a second actuator disposed within the factory interface; an aligner station disposed within the factory interface; and a flipper device coupled to the factory interface. The factory interface comprises four load port stations. The flipper device is coupled to the factory interface at a first load port station of the four load port stations. The aligner is disposed between the first actuator and the second actuator. The aligner station comprises a vacuum chuck. The vacuum chuck comprises an inner region for chucking substrates and an outer region for separately chucking masks. The aligner station comprises an aligner.

In another embodiment, a method of assembling a carrier assembly comprises: inserting a carrier having a mask thereon into an alignment station; aligning the carrier and mask; separating the mask from the carrier; removing the carrier from the alignment station; inserting a substrate into the alignment station; contacting the substrate to the mask; and contacting the carrier to the substrate and mask to create a carrier assembly. Separating the mask from the carrier comprises moving the mask to a vacuum chuck and chucking the mask to the vacuum chuck. Contacting the substrate to the mask comprises moving the substrate to a vacuum chuck and chucking the substrate to the vacuum chuck. Contacting the carrier to the substrate and the mask comprises unchucking the substrate and the mask from a vacuum chuck. The method further comprises inserting the carrier into the alignment station after contacting the substrate to the mask. At least a portion of the mask and the substrate rest within the carrier.

While the foregoing is directed to embodiments of the present disclosure, other and further embodiments of the disclosure may be devised without departing from the basic scope thereof, and the scope thereof is determined by the claims that follow.

What is claimed is:

1. A method, comprising:

inserting a carrier having a mask thereon into an alignment station;

aligning the carrier and the mask;

separating the mask from the carrier;

removing the carrier from the alignment station;

inserting a substrate into the alignment station;

contacting the substrate to the mask; and

contacting the carrier to the substrate and mask to create a carrier assembly.

2. The method of claim **1**, wherein separating the mask from the carrier comprises moving the mask to a vacuum chuck and chucking the mask to the vacuum chuck.

3. The method of claim **1**, wherein contacting the substrate to the mask comprises moving the substrate to a vacuum chuck and chucking the substrate to the vacuum chuck.

4. The method of claim **1**, wherein contacting the carrier to the substrate and the mask comprises unchucking the substrate and the mask from a vacuum chuck.

5. The method of claim **1**, further comprising inserting the carrier into the alignment station after contacting the substrate to the mask.

6. The method of claim **1**, wherein at least a portion of the mask and the substrate rest within the carrier.

7. The method of claim **1**, wherein the mask has:

a first portion of a pattern of slots having a first masked depth, the first masked depth corresponding to one or more mandrels having a first mandrel depth; and

a second portion of the pattern of slots having a second masked depth, the second masked depth corresponding to one or more mandrels having a second mandrel depth, wherein the first masked depth is greater than the second masked depth such that the first mandrel depth is greater than the second mandrel depth.

* * * * *