US012091349B2

(12) **United States Patent**
Lei et al.

(10) **Patent No.: US 12,091,349 B2**
(45) **Date of Patent: Sep. 17, 2024**

(54) **LASER DICING GLASS WAFERS USING ADVANCED LASER SOURCES**

(71) Applicant: **Applied Materials, Inc.**, Santa Clara, CA (US)

(72) Inventors: **Wei-Sheng Lei**, San Jose, CA (US); **Mahendran Chidambaram**, Saratoga, CA (US); **Kangkang Wang**, San Jose, CA (US); **Ludovic Godet**, Sunnyvale, CA (US); **Visweswaren Sivaramakrishnan**, Cupertino, CA (US)

(73) Assignee: **Applied Materials, Inc.**, Santa Clara, CA (US)

(*) Notice: Subject to any disclaimer, the term of this patent is extended or adjusted under 35 U.S.C. 154(b) by 209 days.

(21) Appl. No.: **17/836,162**

(22) Filed: **Jun. 9, 2022**

(65) **Prior Publication Data**

US 2023/0002268 A1 Jan. 5, 2023

Related U.S. Application Data

(60) Provisional application No. 63/216,785, filed on Jun. 30, 2021.

(51) **Int. Cl.**
B23K 26/38 (2014.01)
B23K 26/00 (2014.01)
(Continued)

(52) **U.S. Cl.**
CPC ***C03B 33/0222*** (2013.01); ***B23K 26/0006*** (2013.01); ***B23K 26/0624*** (2015.10);
(Continued)

(58) **Field of Classification Search**
CPC B23K 26/0006; B23K 26/0624; B23K 26/0861; B23K 26/38; B23K 2101/40;
(Continued)

(56) **References Cited**

U.S. PATENT DOCUMENTS

9,701,581 B2 7/2017 Kangastupa et al.
10,144,088 B2 12/2018 Hosseini
(Continued)

FOREIGN PATENT DOCUMENTS

KR 10-2011-0139007 A 12/2011
WO 2017-216603 A1 12/2017

OTHER PUBLICATIONS

International Search Report and Written Opinion for International Application No. PCT/US2022/032755 dated Sep. 23, 2022.

Primary Examiner — Leo B Tentoni
(74) *Attorney, Agent, or Firm* — Patterson + Sheridan, LLP

(57) **ABSTRACT**

A method and apparatus for substrate dicing are described. The method includes utilizing a laser to dice a substrate along a dicing path to form a perforated line around each device within the substrate. The dicing path is created by exposing the substrate to bursts of laser pulses at different locations around each device. The laser pulses are delivered to the substrate and may have a pulse repetition frequency of greater than about 25 MHz, a pulse width of less than about 15 picoseconds, and a laser wavelength of about 1.0 μm to about 5 μm.

23 Claims, 7 Drawing Sheets

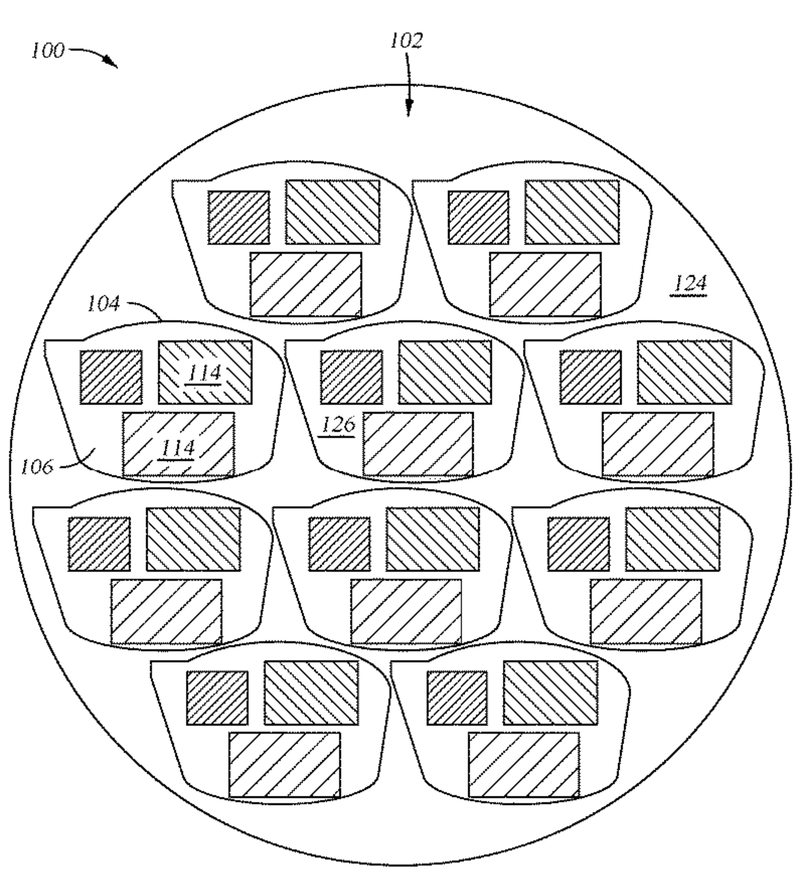

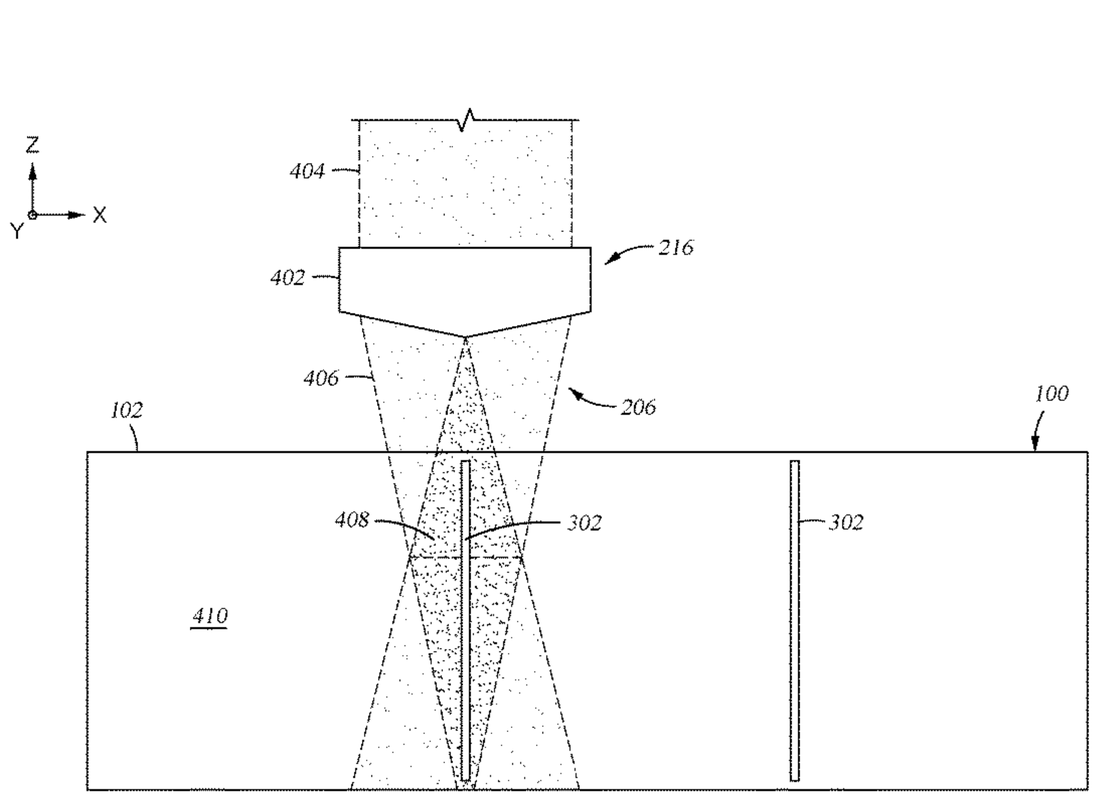

(51) **Int. Cl.**

B23K 26/0622	(2014.01)
B23K 26/08	(2014.01)
B23K 26/55	(2014.01)
C03B 33/02	(2006.01)
C03B 33/10	(2006.01)
C03C 23/00	(2006.01)
B23K 101/40	(2006.01)
B23K 103/00	(2006.01)

(52) **U.S. Cl.**
CPC ***B23K 26/0861*** (2013.01); ***B23K 26/55*** (2015.10); ***C03B 33/102*** (2013.01); ***C03C 23/0025*** (2013.01); *B23K 2101/40* (2018.08); *B23K 2103/42* (2018.08); *B23K 2103/50* (2018.08); *B23K 2103/54* (2018.08); *B23K 2103/56* (2018.08); *B29C 2791/009* (2013.01)

(58) **Field of Classification Search**
CPC B23K 2103/42; B23K 2103/50; B23K 2103/54; B23K 2103/56; B29C 2791/009; C03B 33/0222; C03B 33/102; C03C 23/0025
USPC 264/400, 482; 65/105, 166; 219/121.67
See application file for complete search history.

(56) **References Cited**

U.S. PATENT DOCUMENTS

10,179,374	B2	1/2019	Bovatsek et al.	
2011/0240617	A1*	10/2011	Xu	B23K 26/38 219/121.67 X
2012/0322236	A1	12/2012	Lei et al.	
2015/0166396	A1*	6/2015	Marjanovic	C03B 33/0222 428/137
2015/0209898	A1	7/2015	Kim et al.	
2016/0276794	A1*	9/2016	Rosales	H01S 5/0657
2016/0318122	A1*	11/2016	Ota	C03B 33/102
2017/0250113	A1	8/2017	Vanagas et al.	
2019/0299329	A1*	10/2019	Sun	B23K 26/0624
2020/0324368	A1	10/2020	Hosseini	

* cited by examiner

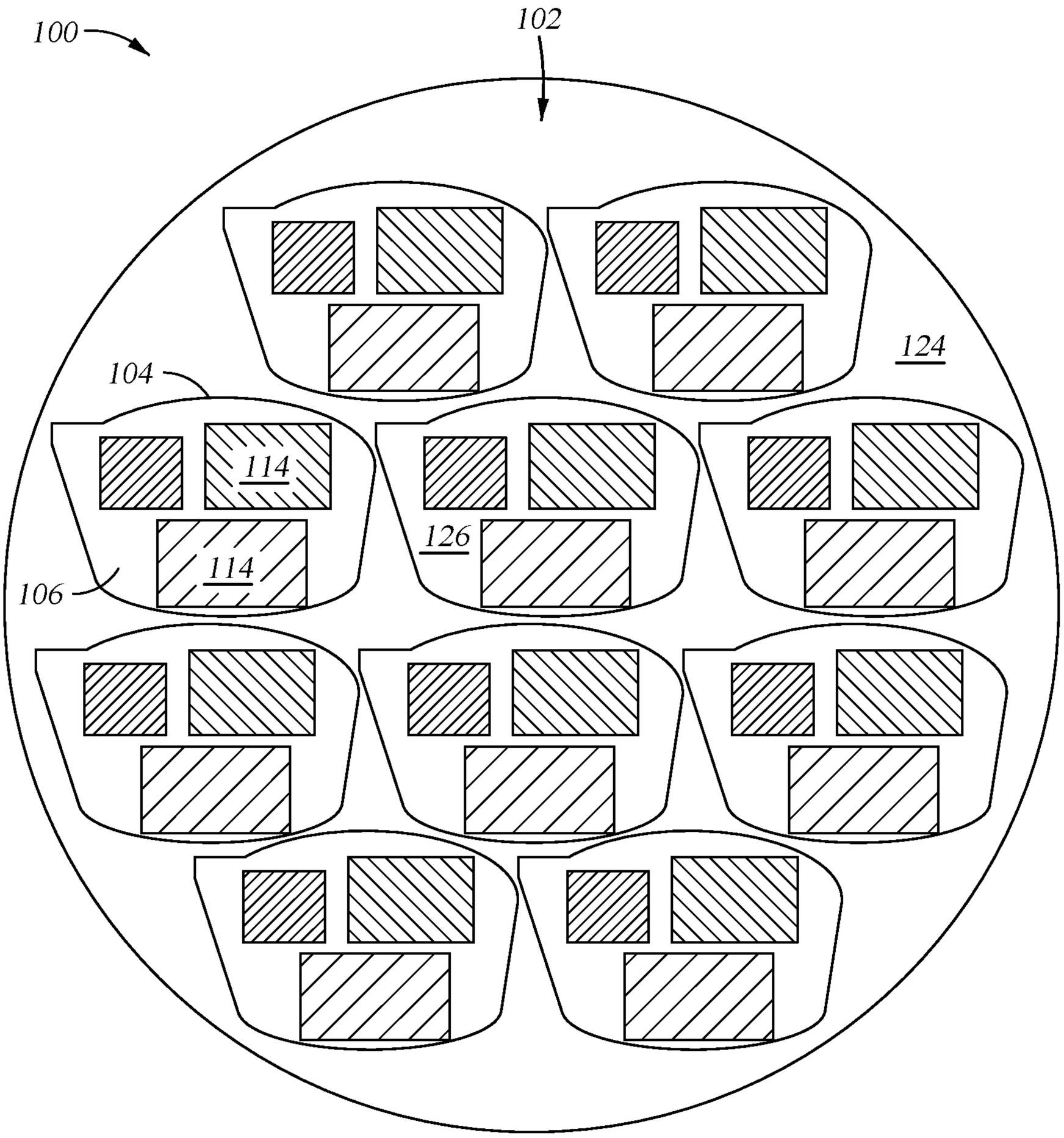

Fig. 1

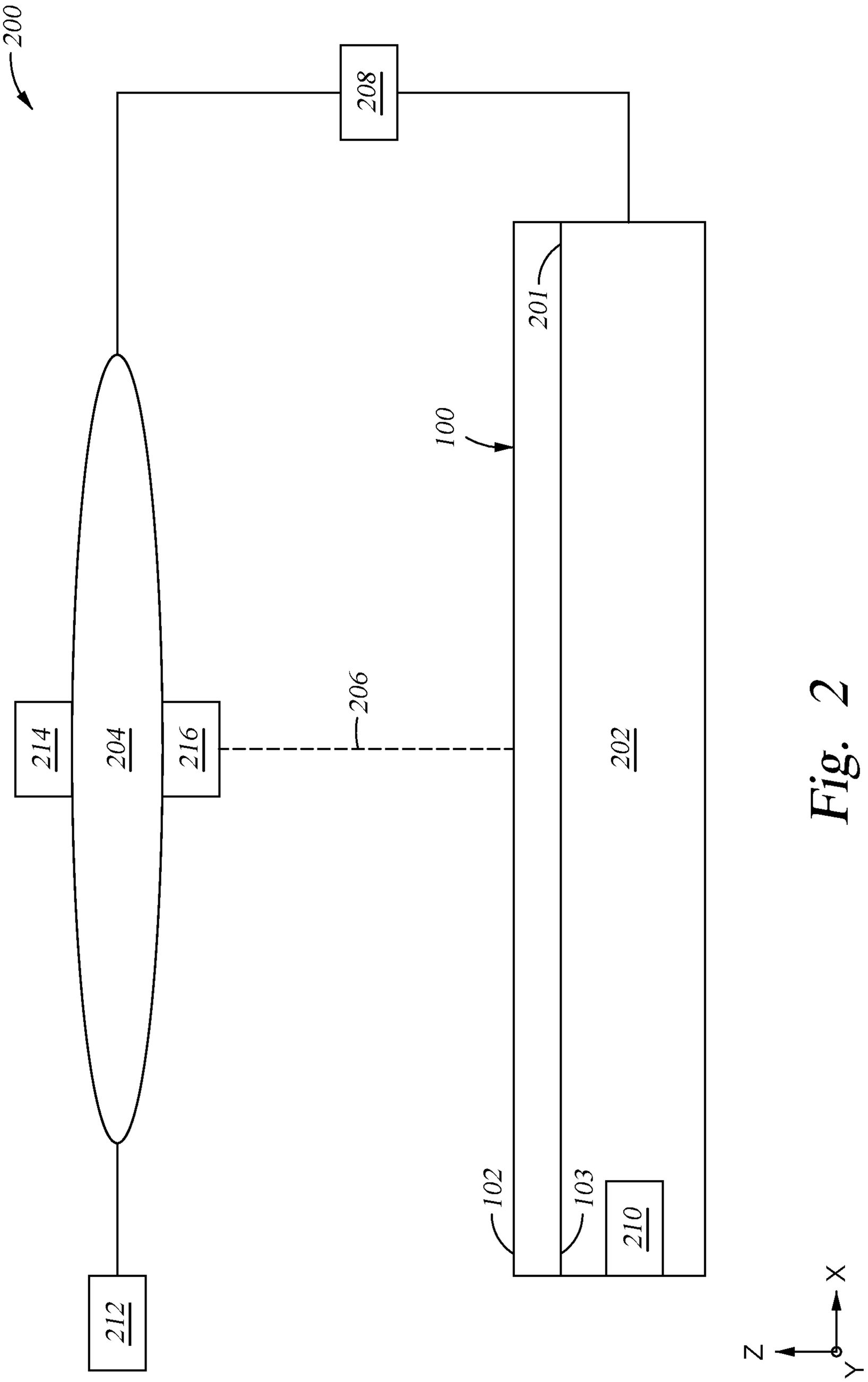

Fig. 2

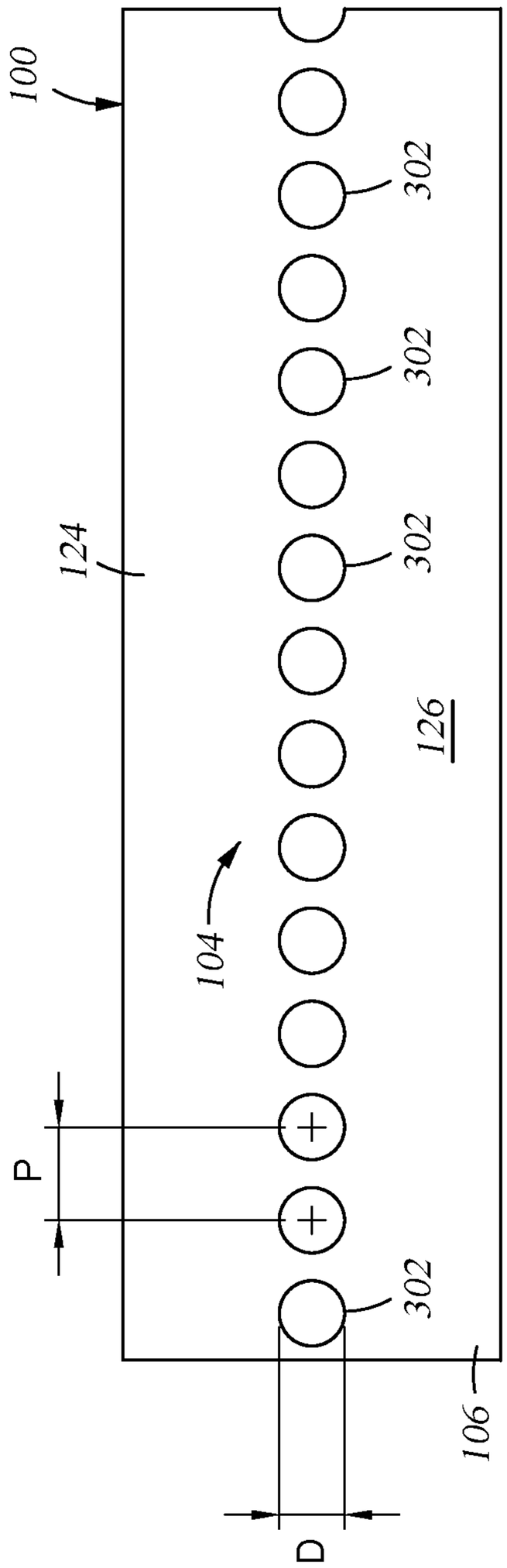
100
302
302
302
124
126
104
P
D
106
Y
X
Z

Fig. 3A

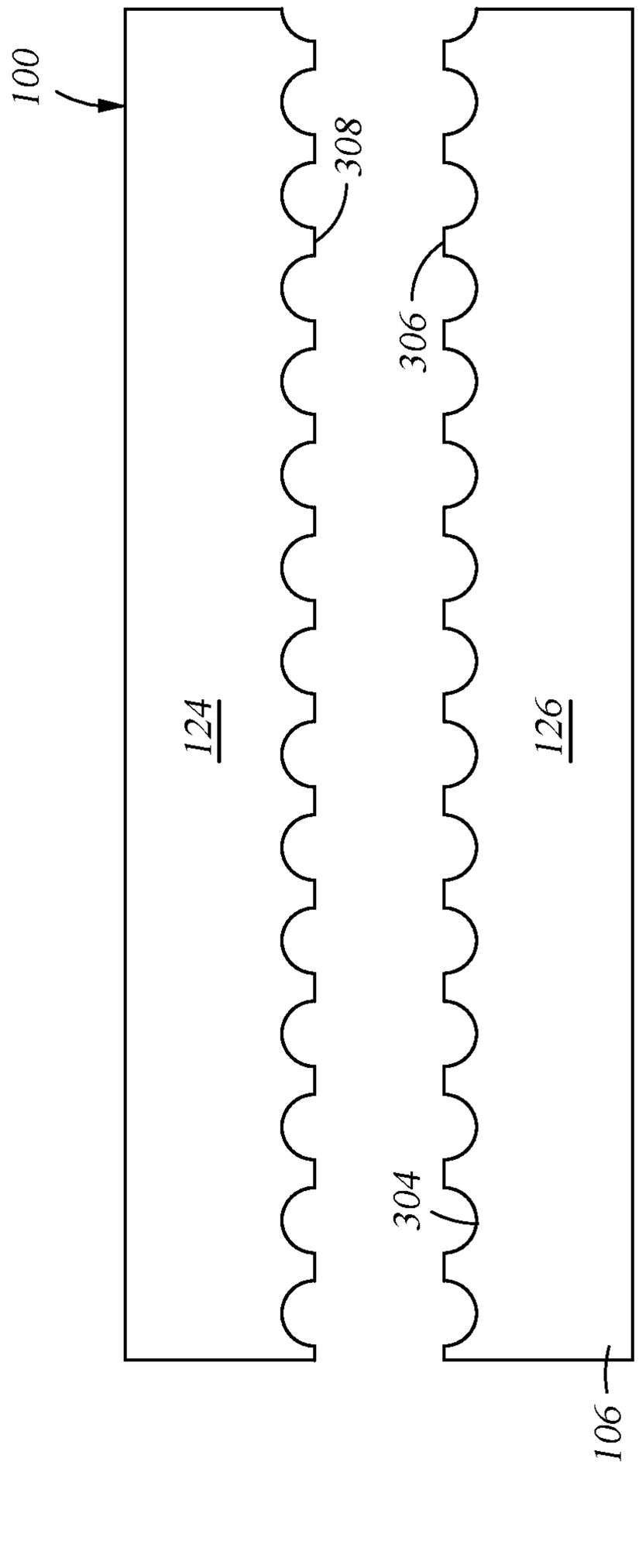
100
308
306
124
126
304
106
Y
X
Z

Fig. 3B

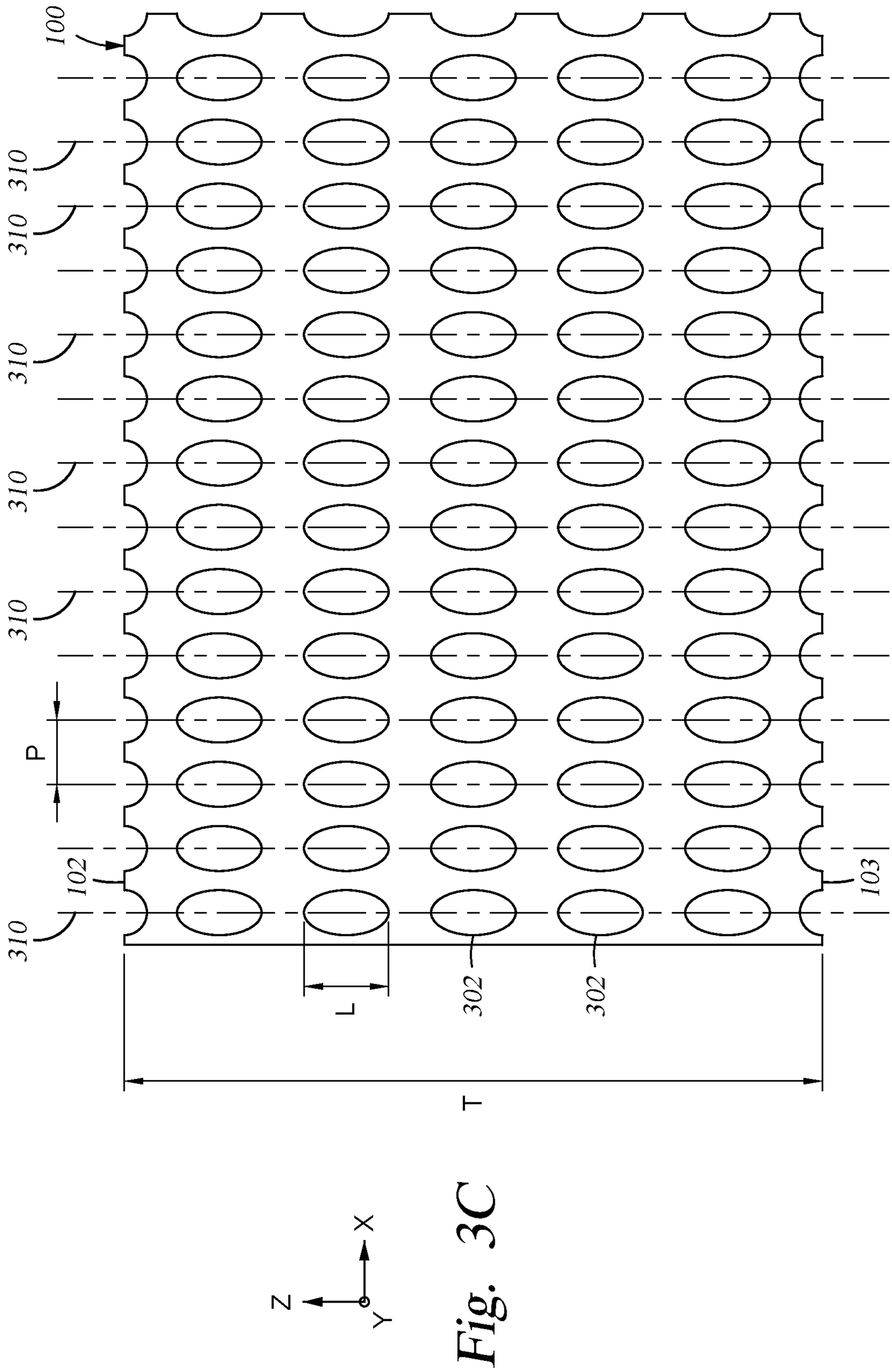

Fig. 3C

Fig. 4

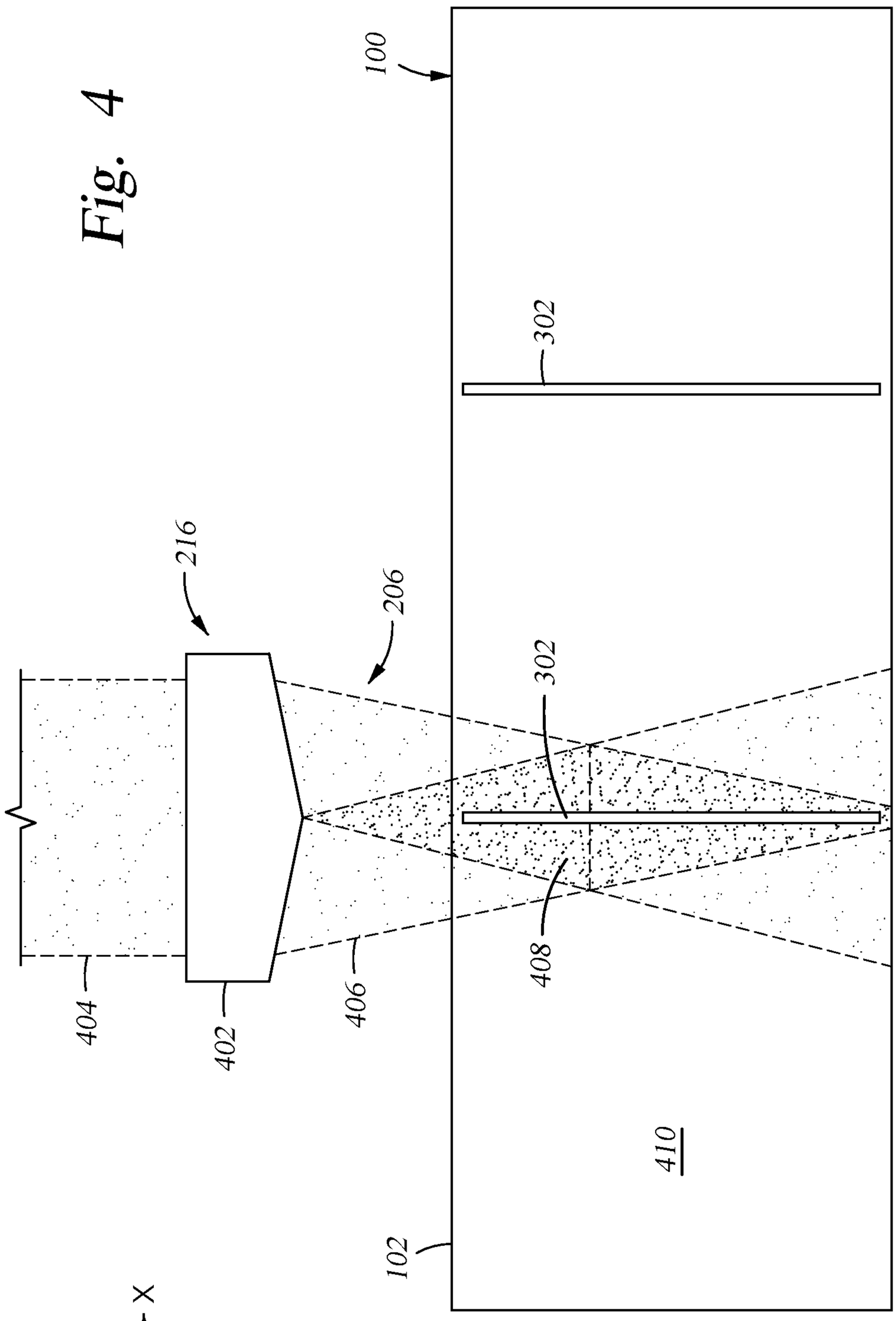

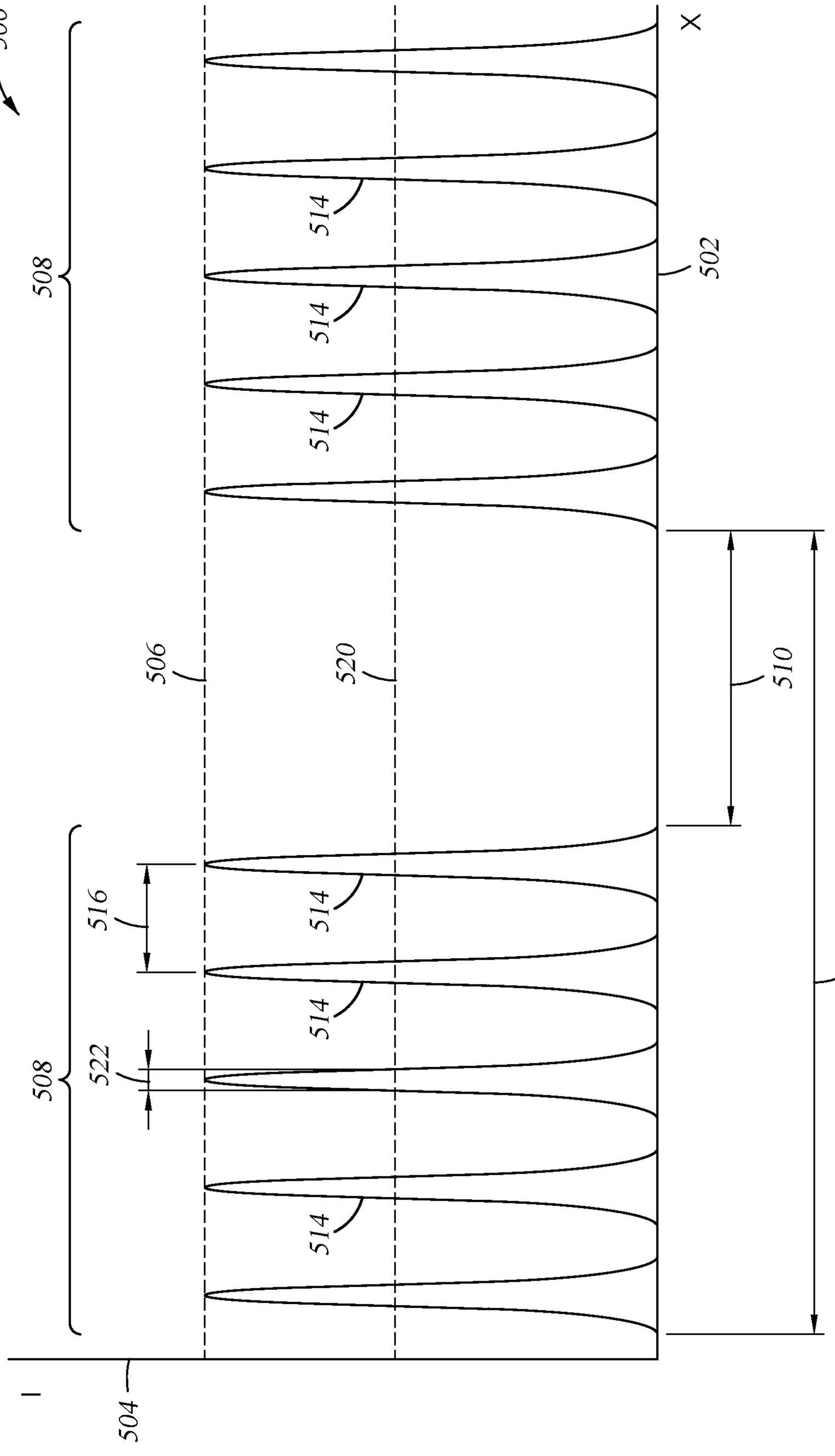

Fig. 5

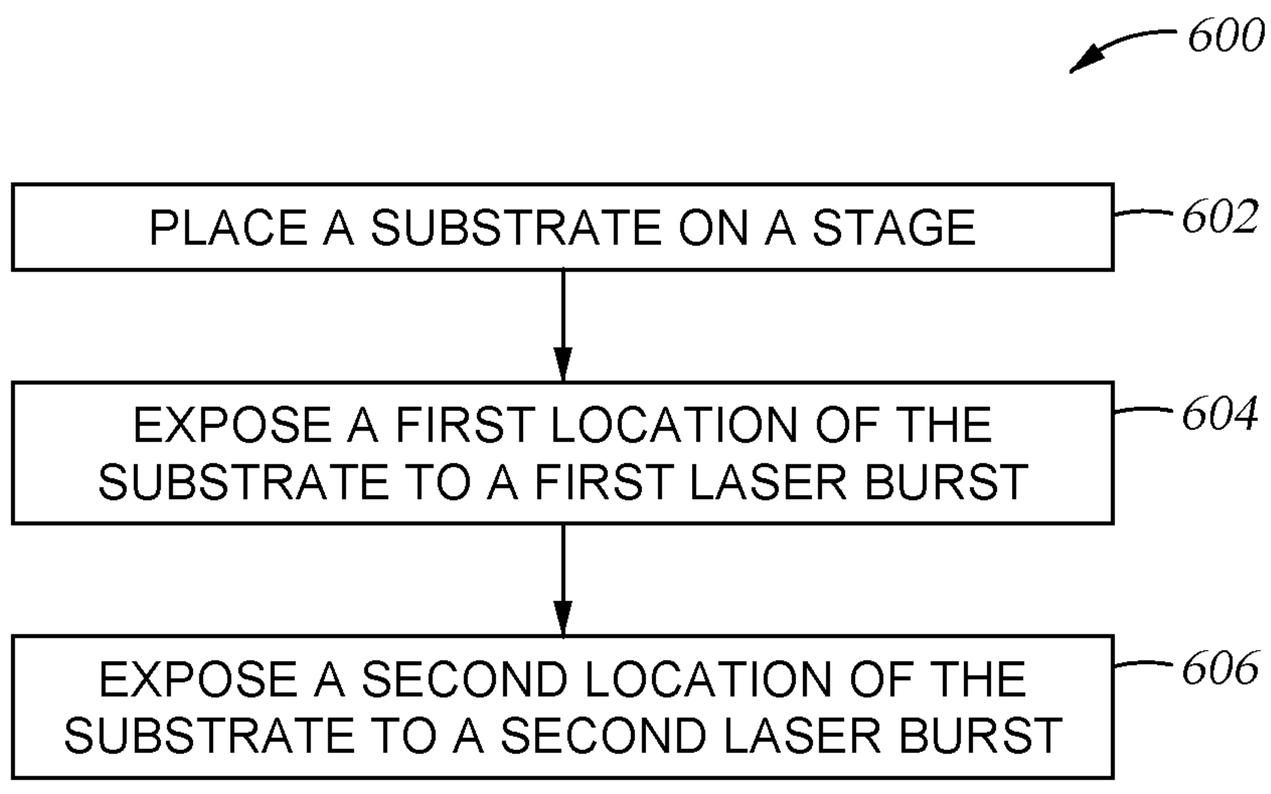
600
PLACE A SUBSTRATE ON A STAGE
602
EXPOSE A FIRST LOCATION OF THE SUBSTRATE TO A FIRST LASER BURST
604
EXPOSE A SECOND LOCATION OF THE SUBSTRATE TO A SECOND LASER BURST
606

Fig. 6

LASER DICING GLASS WAFERS USING ADVANCED LASER SOURCES

CROSS-REFERENCE TO RELATED APPLICATIONS

This application claims priority to U.S. Provisional Patent Application No. 63/216,785, filed Jun. 30, 2021, the entirety of which is herein incorporated by reference.

BACKGROUND

Field

Embodiments of the present disclosure generally relate to optical devices. Specifically, embodiments of the present disclosure relate to methods for dicing one or more optical devices from a substrate with a laser machining system.

Description of the Related Art

Virtual reality (VR) is generally considered to be a computer generated simulated environment in which a user has an apparent physical presence. A VR experience can be generated in 3D and viewed with a head-mounted display (HMD), such as glasses or other wearable display devices that have near-eye display panels as lenses to display a VR environment that replaces an actual environment.

Augmented reality (AR), however, enables an experience in which a user can still see through the display lenses of the glasses or other HMD device to view the surrounding environment, yet also see images of virtual objects that are generated for display and appear as part of the environment. AR can include any type of input, such as audio and haptic inputs, as well as virtual images, graphics, and video that enhance or augment the environment that the user experiences. In order to achieve an AR experience, a virtual image is overlaid on an ambient environment, with the overlaying performed by optical devices.

Multiple optical devices are fabricated on a substrate and then diced prior to use on VR and AR devices. Conventional methods of dicing optically transparent materials, such as glass and silicon carbide (SiC) substrates, include laser ablation cutting or filamentation. During the methods for dicing one or more optical devices from a substrate, it is critical to accurately dice the optical devices from the substrate to retain the quality of the optical devices. The optical devices, generally including high bandgap materials, are brittle, and are sensitive to thermal or mechanical stresses. Current methods of dicing the optical devices from the substrate create separation boundaries and sidewalls with poor surface roughness along the edge of each of the AR/VR devices. Surface roughness of the sidewalls may be greater than about 0.5 μm. Thermal stress within the substrate along the dicing path also contributes to higher sidewall surface roughness and cracking within the device.

Accordingly, there is a need for improved methods for dicing one or more optical devices from a substrate with a laser machining system.

SUMMARY

The present disclosure generally relates to methods of dicing a substrate. In one embodiment, a method of dicing the substrate includes forming a plurality of voids within the substrate along a dicing path. The plurality of voids are formed by exposing the substrate to a burst of laser pulses, each of the laser pulses within the burst have a pulse width of less than about 15 picoseconds and a pulse repetition frequency of greater than about 30 MHz.

In another embodiment, a method of dicing the substrate includes forming a plurality of voids within the substrate along a dicing path. The plurality of voids are formed by exposing the substrate to a plurality of laser pulses. Each of the laser pulses has a laser wavelength of about 1.0 μm to about 5 μm and a pulse repetition frequency of greater than about 50 MHz.

In yet another embodiment, a non-transitory computer-readable medium is described. The non-transitory computer-readable medium stores instructions that, when executed by a processor, cause a computer system to perform operations. The operations include forming a plurality of voids within a substrate along a dicing path by exposing the substrate to a plurality of laser pulses. Each of the laser pulses has a laser wavelength of about 1.0 μm to about 5 μm and a pulse repetition frequency of greater than about 50 MHz.

BRIEF DESCRIPTION OF THE DRAWINGS

So that the manner in which the above recited features of the present disclosure can be understood in detail, a more particular description of the disclosure, briefly summarized above, may be had by reference to embodiments, some of which are illustrated in the appended drawings. It is to be noted, however, that the appended drawings illustrate only exemplary embodiments and are therefore not to be considered limiting of its scope, may admit to other equally effective embodiments.

FIG. **1** is a schematic, top-view of a substrate according to embodiments.

FIG. **2** is a schematic, cross-sectional view of a laser machining system according to embodiments.

FIGS. **3**A-**3**B are schematic, top views of a portion of the substrate along a dicing path according to embodiments.

FIG. **3**C is a schematic, cross-sectional view of a portion of the substrate along the dicing path according to embodiments.

FIG. **4** is a schematic, cross-sectional view of an optical array according to embodiments.

FIG. **5** is a graph illustrating laser pulse applications to the substrate according to embodiments.

FIG. **6** is a method of forming the dicing path according to embodiments.

To facilitate understanding, identical reference numerals have been used, where possible, to designate identical elements that are common to the figures. It is contemplated that elements and features of one embodiment may be beneficially incorporated in other embodiments without further recitation.

DETAILED DESCRIPTION

The present disclosure generally relates to optical devices. Specifically, embodiments of the present disclosure relate to methods for dicing one or more optical devices from a substrate with a laser machining system. Substrate materials such as silica glass and other types of glass materials have high bandgaps. In some embodiments, glass substrates formed from silicon oxide (SiO_2) have a bandgap of about 9.2 eV and therefore are optically transparent over a broad wavelength spectrum. However, when a laser is tightly focused to less than 5 μm and has a desired pulse intensity, a phase transformation is generated within the substrate due to nonlinear optical absorption. The phase transformation

generates voids or cracking in the glass substrate. The voids or cracks are propagated along a line to form a void array. The void array is referred to as a dicing path. The dicing path is formed by moving a laser after each burst of laser pulses and forms a perforated barrier. Different portions of the substrate are then separated along the dicing path.

Each of the voids/cracks is formed discreetly. Therefore, during separation of the substrate along the dicing path the separated wall of the substrate has a side wall surface roughness. The side wall surface roughness has a negative effect on the performance of AR/VR devices. Therefore, embodiments described herein are directed towards apparatus and methods for reducing the side wall surface roughness. The side wall surface roughness is reduced to less than 0.3 μm using the methods described herein. The surface roughness is reduced by reducing the void diameter and the void pitch of each of the voids formed within the substrate. Smaller void diameters and void pitches lead to lower surface roughness. Lowering pulse energy applied to the substrate and the pulse width also reduces the thermal stress and the void diameter within the substrate.

FIG. **1** is a schematic, top-view of a substrate **100**. The substrate **100** includes a top surface **102** and a bottom surface **103** (FIG. **2**) opposite the top surface **102**. The substrate **100** includes one or more optical devices **106**, disposed on the top surface **102** and/or the bottom surface **103** of the substrate. The one or more optical devices **106** can include structures **114** (i.e., fins) having sub-micron critical dimensions, e.g., nano-sized critical dimensions.

The substrate **100** may be formed from any suitable material, provided that the substrate **100** can adequately transmit or absorb light in a desired wavelength or wavelength range and can serve as an adequate support for the one or more optical devices **106**. Substrate selection may include any suitable material, including, but not limited to, amorphous dielectrics, crystalline dielectrics, aluminum nitride, silicon oxide, silicon carbide, polyhedral oligomeric silsesquioxane (POSS) and other polymers, and combinations thereof. In some embodiments, which can be combined with other embodiments described herein, the substrate **100** includes a transparent material. Suitable examples may include an oxide, sulfide, phosphide, telluride or combinations thereof. Additionally, the substrate **100** may be varying shapes, thicknesses, and diameters. For example, the substrate **100** may have a diameter of about 150 mm to about 300 mm. The substrate **100** may have a circular, rectangular, or square shape. The substrate **100** may have a thickness of between about 300 μm to about 1 mm. The bandgap of the material of the substrate is about 5 eV to about 12 eV, such as about 6 eV to about 10 eV, such as about 8 eV to about 10 eV, such as about 9.2 eV.

It is to be understood that the one or more optical devices **106** described herein are exemplary optical devices. In one embodiment, which can be combined with other embodiments described herein, an optical device of the one or more optical devices **106** is a waveguide combiner, such as an augmented reality waveguide combiner. In another embodiment, which can be combined with other embodiments described herein, an optical device of the one or more optical devices **106** is a flat optical device, such as a metasurface.

Each optical device **106** of the one or more optical devices **106** includes a dicing path **104**. The dicing path **104** is disposed around the exterior edge of each optical device **106**. The dicing path **104** is the desired dicing path for a laser (shown in FIG. **2**) to travel along during the method **600** (FIG. **6**) such that the quality of the optical device **106** is maintained. Although only ten optical devices **106** are shown on the substrate **100**, any number of optical devices **106** may be disposed on the substrate **100**. The portion of the substrate **100** which corresponds to each of the optical devices **106** is an optical device portion **126**. The portion of the substrate **100** which is outside of the optical device portions **126** is an outer portion **124**. During methods described herein, the optical device portions **126** forming each of the optical devices **106** are separated from the outer portion **124** of the substrate **100** along the dicing paths **104**. The optical devices **106** may be separated via mechanical or thermal separation.

FIG. **2** is a schematic, cross-sectional view of a laser machining system **200**. The laser machining system is utilized in a method, such as the method **600**, for dicing one or more optical devices from a substrate **100** with the laser machining system **200**.

The laser machining system **200** includes a substrate **100** disposed on a surface **201** of a stage **202**. The stage **202** is disposed in the laser machining system **200** such that the surface **201** of the stage **202** is positioned opposite of a scanner **204**. The scanner **204** includes a laser source **214**, an optical array **216**, and a laser **206** disposed from the optical array **216**. The laser machining system **200** is operable to dice the one or more optical devices **106** from the substrate **100** along the dicing path **104**. The laser machining system **200** includes a controller **208**. The controller **208** is in communication with the stage **202** and the scanner **204**.

The laser machining system **200** is operable to dice one or more optical devices **106** from a substrate **100**. In one embodiment, which can be combined with other embodiments described herein, the laser machining system **200** is operable to utilize filamentation to dice the one or more optical devices **106** from the substrate **100**. Filamentation includes a radiation pulse from the laser source **214**. The radiation pulse passes through the optical array **216** and is focused into the laser **206**. The laser **206** etches a hole or a void in the substrate **100** through the thickness of the substrate **100** along the dicing path **104**. In another embodiment, which can be combined with other embodiments described herein, the laser machining system **200** is operable to utilize laser ablation to dice the one or more optical devices **106** from the substrate **100**. Laser ablation includes etching a trench into the substrate **100** along the dicing path **104** with the laser **206**.

The controller **208** is generally designed to facilitate the control and automation of the methods described herein. The controller **208** may be coupled to or in communication with the laser source **214**, the optical array **216**, the stage **202**, and the scanner **204**. The stage **202** and the scanner **204** may provide information to the controller **208** regarding the method **600** and alignment of the substrate **100**. The controller **208** may be in communication with or coupled to a CPU (i.e., a computer system). The CPU can be a hardware unit or combination of hardware units capable of executing software applications and processing data. In some configurations, the CPU includes a central processing unit (CPU), a digital signal processor (DSP), an application-specific integrated circuit (ASIC), a graphic processing unit (GPU) and/or a combination of such units. The CPU is generally configured to execute the one or more software applications and process stored media data. The controller **208** may include a non-transitory computer-readable medium for storing instructions of forming a dicing path along a substrate as described herein. The non-transitory computer-readable medium may be a part of the CPU.

The laser **206** is a pulsed laser. In one embodiment, which can be combined with other embodiments described herein,

the laser **206** includes a Gaussian beam profile with a beam quality "M2-factor" of less than about 1.3. In another embodiment, which can be combined with other embodiments described herein, the laser **206** is a Bessel-type beam profile. In yet other embodiments, the laser **206** is a multi-focus laser and uses a bifocal lens as part of the optical array **216**. Multiple lenses may also be used within the optical array **216** to diffract the laser **206** and form multiple focal points within the substrate **100**. The laser **206** is in communication with the controller **208**. The controller **208** may control other input parameters or output parameters of the laser **206**, as described in the method **600**.

The stage **202** includes a stage actuator **210**. The stage actuator **210** allows the stage **202** to scan in the X direction, the Y direction, and the Z direction, as indicated by the coordinate system shown in FIG. **2**. The stage **202** is coupled to the controller **208** in order to provide information of the location of the stage **202** to the controller **208**. Additionally, the stage **202** is in communication with the controller **208** such that the stage **202** may move in a direction such that the laser **206** traces the dicing path **104**.

The scanner **204** includes a scanner actuator **212**. The scanner actuator **212** allows the scanner **204** to scan in the X direction, the Y direction, and the Z direction, as indicated by the coordinate system shown in FIG. **2**. The laser source **214** and the optical array **216** are disposed in the scanner **204**. The scanner **204** is coupled to the controller **208** in order to provide information of the location of the scanner **204** to the controller **208**. Additionally, the scanner **204** is in communication with the controller **208** such that the scanner **204** may move the laser **206** to trace the dicing path **104**. In one embodiment, which can be combined with other embodiments described herein, the scanner **204** is a galvo scanner.

In one embodiment, which can be combined with other embodiments described herein, the laser machining system **200** performing methods for dicing one or more optical devices **106** from a substrate **100** may utilize both the scanner **204** and the stage **202** to direct the laser **206** along the dicing path **104**. In another embodiment, which can be combined with other embodiments described herein, the laser machining system **200** performing the methods for dicing one or more optical devices **106** from a substrate **100** may utilize only the scanner **204** to direct the laser **206** along the dicing path **104**. In yet another embodiment, which can be combined with other embodiments described herein, the laser machining system **200** performing the methods for dicing one or more optical devices **106** from a substrate **100** may utilize only the stage **202** to direct the laser **206** along the dicing path **104**.

In embodiments with a substrate **100** including glass, the scanner **204** and the laser **206** are in a fixed position. The stage **202** is scanned such that the laser **206** moves along the dicing path **104**. The laser **206** includes a Bessel type beam profile. The laser **206** is an infrared laser. The wavelength of the laser **206** is about 1.0 μm to about 5 μm. The laser **206** is transparent in the substrate **100** including glass, and thus is able to dice the one or more optical devices **106** of the substrate **100**. The laser **206** has a beam width of less than about 10 μm, such as less than about 5 μm, such as less than about 3 μm.

In embodiments with a substrate **100** including silicon carbide, the scanner **204**, such as a galvo scanner, is utilized to scan the laser **206** along the dicing path **104**. The stage **202** is utilized to scan the substrate **100** between the plurality of sections such that the laser **206** may move along each section along the dicing path **104**. The laser **206** includes a Gaussian type beam profile. The laser **206** is absorptive in the substrate **100** which includes silicon carbide, and thus is able to dice the one or more optical devices **106** of the substrate **100**. The laser **206** may be an infrared laser with a wavelength of about 1.0 μm to about 5 μm and the photon energy of the laser **206** may be less than about 1.0 eV.

FIGS. **3**A and **3**B are schematic, top views of a portion of the substrate **100** along a dicing path **104** according to embodiments. FIG. **3**A illustrates a portion of the substrate **100** along the dicing path **104**. The dicing path **104** is disposed around an optical device **106** and separates the optical device **106** from an outer portion **124** of the substrate **100**. The dicing path **104** is formed from a plurality of voids **302**. The plurality of voids **302** are aligned with each other and disposed in a line or a curve to form a boundary between the outer portion **124** and the optical device portion **126**.

The dicing path **104** is formed from a single row of voids **302**. Each of the voids **302** may have a roughly circular or ovoid cross-section in the x-y plane. Each of the voids **302** has a diameter D. The diameter D is the largest axis through the cross section of the voids **302** along the x-y plane. Each adjacent void **302** has a pitch P therebetween. The pitch P is the distance from the center of the cross section of one void **302** and the center of the cross section of a second void **302**. The pitch P is measured along the length of the dicing path **104**. Reducing the diameter D of each of the voids **302** may subsequently reduce the pitch P between adjacent voids **302**.

As discussed herein, a smaller diameter D and a smaller pitch P are beneficial in that the surface roughness of the side surface after separation of the optical device **106** from the rest of the substrate **100** is reduced when utilizing reduced diameters D and pitch P. In embodiments described herein, the diameter D of each of the voids **302** is less than about 3 μm, such as less than about 2 μm, such as less than about 1.5 μm. The pitch P of each of the voids **302** is less than about 5 μm, such as less than about 3 μm, such as less than about 2 μm.

As shown in FIG. **3**B, the optical device portion **126** is split from the outer portion **124**. Splitting the optical device portion **126** from the outer portion **124** is performed along the dicing path **104**. Each of the voids **302** is therefore split into halves or partial voids **304**. The splitting of the optical device portion **126** from the outer portion **124** occurs via mechanical or thermal separation, such that a portion of the substrate **100** is heated, cooled, or impacted by an outside force or load. Once the optical device portion **126** and the outer portion **124** are split, an optical device sidewall surface **306** and an outer portion side wall surface **308** are formed. The optical device sidewall surface **306** is the outer side wall surface of the optical device **106**. The outer portion side wall surface **308** is the outer side wall surface of the outer portion **124**.

Methods and apparatus as described herein are configured to reduce the surface roughness of the optical device sidewall surface **306**. Methods described herein provide an optical device sidewall surface **306** with a surface roughness of less than about 0.3 μm, such as less than about 0.2 μm, such as less than about 0.1 μm. As discussed herein, as the void diameter D and pitch P decrease, the surface roughness also decreases.

FIG. **3**C is a schematic, cross-sectional view of a portion of the substrate **100** along the dicing path **104**. The voids **302** are formed in columns **310**, such that a plurality of voids **302** are stacked along the column **310**. In some embodiments, a laser beam with a single focal point is utilized, such as a Gaussian beam. Each of the voids **302** within a column **310** is formed by altering the focal length or the location of the

focal point of the laser **206**, such that the focal point of the laser **206** is disposed at a different depth within the thickness T of the substrate **100**. In embodiments where a Bessel type laser beam is used, multiple voids **302** can be formed simultaneously through the substrate thickness T or an elongated single void is formed through the substrate thickness T. In some embodiments, all of the voids **302** within one column **310** are formed simultaneously using a Bessel type laser beam. In embodiments where a laser beam with multiple focal points or a special beam profile using diffractive optics elements (DOEs) is used, multiple or all of the voids **302** within a column **310** are formed simultaneously. Each of the columns **310** may be parallel to one another and disposed normal to the top surface **102** of the substrate **100**.

Each of the columns **310** includes 1 to 30 voids, such as 5 to 20 voids, such as 5 to 15 voids, such as 7 to 15 voids, such as 10 to 15 voids. The number of voids within each column **310** may be dependent upon the thickness of the substrate **100** and the diameter D of each of the voids **302**. The length L of each of the voids **302** along the column **310** is variable depending upon the type of optical array **216** utilized. In some embodiments, the length L of each of the voids **302** is about 0.5 μm to about 15 μm, such as about 1 μm to about 12 μm. The relative diameter D and pitch P between each void **302** in the columns **310** is the same, such that the pitch P between a void **302** within a first column and a void **302** within a second column is similar throughout the thickness T of the substrate **100**.

The voids **302** are substantially evenly spaced along the column **310** between the top surface **102** and the bottom surface **103** of the substrate. In some embodiments, each column **310** of voids **302** is formed using a single burst of laser pulses, such that a first burst of laser pulses is administered to the substrate **100** and forms a first column **310** of voids **302** before moving the relative location of the laser **206** to the substrate **100** and delivering a second burst of laser pulses to the substrate **100** to form a second column **310** of voids **302**. The repeated exposure of the substrate **100** to bursts of laser pulses at different locations along the dicing path **104** forms a plurality of columns **310** of voids **302** along the dicing path **104**.

FIG. **4** is a schematic, cross-sectional view of an optical array **216** disposed above the substrate **100**. The optical array **216** includes a beam **404** of radiation entering one or more lenses **402**. The one or more lenses **402** focus the beam **404** into the laser **206** which has a focal point or focal region within the substrate **100**. The optical array **216** enables the formation of voids **302** within the substrate **100**.

The beam **404** may be radiation emitted at a wavelength of about 1.0 μm to about 5 μm, such as about 1.3 μm to about 5 μm, such as about 1.3 μm to about 4 μm. The beam **404** may be a collimated beam emitted by a laser source, such as the laser source **214**. The beam **404** may include radiation with a limited wavelength and amplitude.

The one or more lenses **402** are configured to concentrate the beam **404** into a laser. As shown herein, the one or more lenses **402** is a single lens. The lens shown is an axicon lens and is used to form a Bessel beam. Other types of lens assemblies may also be utilized in place of the one or more lenses **402**. In some embodiments, the one or more lenses **402** may be a concave lens, a convex lens, a plano-convex lens, or a meniscus lens. The one or more lenses **402** may have multiple focal points. The multiple focal points may be due to the use of a bifocal lens, a trifocal lens, or a diffractive optical element. In some embodiments, the laser **206** is output from the one or more lenses **402** as a Gaussian beam.

As shown in FIG. **4**, the one or more lenses **402** is an axicon lens which forms a Bessel beam. The laser **206** is formed by the one or more lenses **402** and includes a low intensity region **406** and a high intensity region **408**. The low intensity region **406** is the portion of the laser **206** with a lower radiation concentration than the high intensity region **408**. The radiation concentration within the high intensity region **408** is high enough to form a crack or a void, such as the voids **302** within the substrate **100**. The radiation concentration within the high intensity region **408** may be greater than about $1 \cdot 10^9$ W/cm^2, such as greater than about $1 \cdot 10^{10}$ W/cm^2, such as greater than about $1 \cdot 10^{12}$ W/cm^2, such as greater than about $1 \cdot 10^{15}$ W/cm^2. The high intensity region **408** is positioned within the substrate **100**. The substrate **100** is made from a material for which the radiation of the laser **206** is transparent. However, within the high intensity region **408**, the energy concentration is high enough to cause phase transitions within the substrate **100** and form the voids **302**.

The optical array **216** is disposed above the top surface **102** of the substrate **100**. The high intensity region **408** and/or the focal point of the laser **206** is disposed within the body **410** of the substrate **100**.

FIG. **5** is a graph **500** illustrating a plurality of laser pulse **514** deliveries to the substrate **100**. The laser pulses **514** are delivered to the substrate **100** over a period of time **502** and have controlled intensities **504**. Each of the laser pulses **514** has a maximum pulse energy **506** of greater than about 75 μJ, such as greater than about 100 μJ, such as greater than about 200 μJ. Each individual laser pulse **514** is delivered as part of a burst **508**.

Each burst **508** is delivered to one location along the dicing path **104**, such that a first burst **508** is delivered to a first location along the dicing path **104** and a second burst **508** is delivered to a second location along the dicing path **104**. Five laser pulses **514** are shown within each burst **508** herein, but other quantities of bursts are also contemplated, such as 5 to 40 individual laser pulses **514**, such as 5 to 20 individual pulses, such as 6 to 15 individual laser pulses **514**, such as 8 to 15 individual laser pulses, such as 8 to 12 individual laser pulses.

Each of the individual laser pulses **514** are administered at a pulse repetition time **516** of less than about $1 \cdot 10^{-9}$ s, such as less than about $2 \cdot 10^{-8}$ s. A pulse repetition frequency is the inverse of the pulse repetition time **516**, such that the pulse repetition frequency is greater than about 25 MHz, such as greater than about 30 MHz, such as greater than about 40 MHz, such as greater than about 50 MHz, such as about 1 GHz or higher. High pulse repetition frequencies have been found to reduce the maximum pulse energy **506** of each of the laser pulses **514** during formation of the voids **302**. The pulse repetition frequency is defined as the rate at which the laser pulses **514** are administered to the substrate **100** within each burst **508**.

The burst to burst time **512** is the amount of time from the start of one burst **508** to the start of the subsequent burst **508**. As described herein, the burst to burst time **512** is less than about 15 μs, such as less than about 5 μs, such as less than about 2 μs. The burst to burst frequency is the inverse of the burst to burst time **512**. Therefore, the burst to burst frequency is greater than about 65 kHz, such as greater than about 200 kHz, such as greater than about 400 kHz. The burst to burst time **512** and therefore the burst to burst frequency are limited by the pulse repetition frequency, the number of pulses, and a burst gap **510**. The burst gap **510** is the amount of time between each burst **508**. The burst gap **510** may be large enough to enable one or both of the laser

and the substrate to be moved relative to one another, such that the subsequent burst is applied to a different portion of the substrate **100** at a different section of the dicing path **104**. The burst gap **510** as described herein is less than about 15 μs, such as less than about 5 μs, such as less than about 2 μs.

When the intensity **504** of each laser pulse **514** is greater than a phase change energy **520**, the voids **302** are formed within the substrate **100**. The phase change energy **520** may be greater than about 0.5 eV, such as greater than about 0.55 eV. A pulse width **522** is defined as the forward width at half maximum (FWHM) of the peak intensity of the pulse. For methods described herein, the pulse width **522** is less than about 15 picoseconds (ps), such as less than about 11 ps, such as about 10 ps or less, such as less than about 5 ps, such as about 2 ps or less.

FIG. **6** is a method **600** of forming the dicing path **104**. The method **600** described herein enables smoother optical device sidewall surface **306**, such as optical device sidewall surface **306** with a surface roughness of less than about 0.3 μm, such as less than about 0.2 μm, such as less than about 0.1 μm. The method **600** includes placing a substrate, such as the substrate **100**, onto a stage, such as the stage **202**, during an operation **602**. The substrate may be placed on the stage with the optical devices facing either upwards towards a scanner or downwards, such that the optical devices face a surface of the stage.

After the substrate is placed on the stage, a first location on the substrate is exposed to a first laser burst during an operation **604**. The first laser burst includes a plurality of laser pulses. Each of the laser pulses has a pulse width of less than about 15 ps, such as less than about 11 ps, such as about 10 ps or less, such as less than about 5 ps, such as about 2 ps or less. The wavelength of the laser of the laser pulses has a wavelength of about 1.0 μm to about 5 μm, such as about 1.3 μm to about 5 μm, such as about 1.3 μm to about 4 μm. The maximum pulse energy of each of the laser pulses is greater than about 75 μJ, such as greater than about 100 μJ, such as greater than about 200 μJ.

The first laser burst includes 5 to 40 individual laser pulses, such as 5 to 20 individual pulses, such as 6 to 15 individual laser pulses, such as 8 to 15 individual laser pulses, such as 8 to 12 individual laser pulses. Each of the individual laser pulses within the burst is delivered at a rate pulse repetition time of less than about $1 \cdot 10^{-9}$ s, such as less than about $2 \cdot 10^{-8}$ s. A pulse repetition frequency is the inverse of the pulse repetition time, such that the pulse repetition frequency is greater than about 25 MHz, such as greater than about 30 MHz, such as greater than about 40 MHz, such as greater than about 50 MHz, such as about 1 GHz or higher. The burst-to-burst frequency is greater than about 65 kHz, such as greater than about 200 kHz, such as greater than about 400 kHz.

The laser pulses applied to the first location may be a Bessel beam or a Gaussian beam. In yet other embodiments, the laser pulses are multi-focus point lasers formed by a multi-focus lens or a diffractive optic element.

When delivering the laser pulses to the substrate, a focal point of the laser is disposed within the substrate, such as between a top surface and a bottom surface of the substrate. In some embodiments, the location of the focal point of the laser is changed between the laser pulses, such as between each laser pulse or between each pair of two laser pulses, or each set of three laser pulses. In other embodiments where a Bessel beam or multi-focus beam are utilized, the location of the focal point of the laser is changed only periodically, such as only 1-2 times per burst to generate cracking or phase modification along different layers depth-wise within the material. The location of the focal point is changed to be at a different position within the thickness of the substrate, such that the first laser burst creates a first column of voids through the substrate as described with respect to FIG. **3**C. Each of the voids may be formed by one or more of the laser pulses within the first laser burst. A controller may control the process parameters and location of the laser pulses as they are delivered to the substrate.

The combination of the above process conditions, such as a pulse width of less than about 15 ps and a pulse repetition frequency of greater than about 25 MHz have been shown to reduce void diameters and reduce the amount of pulse energy applied to each location on the substrate. The increased pulse repetition frequency and reduced pulse width enable providing an equivalent or higher peak power while reducing or maintaining the same void diameter. In some embodiments, the laser pulse width is less than about 10 ps, such as less than 500 femtoseconds (fs) and the pulse repetition frequency is greater than about 50 MHz. In another embodiment, the pulse repetition frequency is greater than about 1 GHz and the pulse width is less than about 10 ps, such as less than 500 fs. The pulse width may cause reductions in achievable pulse energy, as a ratio of pulse energy to pulse width is limited. Longer pulse widths therefore enable higher pulse energy application. Higher pulse energy application increases the average power application. In some embodiments, increased power application reduced reliability of void formation. However, higher power may also lead to increased processing throughput, such that 10 ps laser pulses at a repetition frequency of 1 GHz with an 80 W laser have been found to have higher processing speeds than 500 fs laser pulses at a repetition frequency of 1 GHz with a 20 W laser with little change in dicing quality. Increasing the pulse repetition frequency enables bursts of 10 or more pulses per burst. The reduced void diameters enables a smaller pitch between each void and lower surface roughness along the dicing path. The reduced pulse energy and pulse width further has been shown to reduce thermal stress around each of the voids within the substrate.

A laser wavelength of about 1.3 μm to about 4 μm is more optically transparent in glass. Improved optical transparency of the laser within the substrate enables smaller energy absorption cross sections and reduced damage spot size. Reduced damage spot size enables smaller voids and a reduced pitch between each of the voids. Reduced void diameter and pitch further reduce the surface roughness after separating the substrate along the dicing path.

The pulse widths and pulse repetition frequencies described herein have further been shown to reduce the energy input to the substrate. The short pulse width, high pulse frequency, and longer wavelengths cause reduced thermal stress in zones effected by laser exposure.

After exposing the first location of the substrate to the first laser burst during the operation **604**, a second location of the substrate is exposed to a second laser burst during a subsequent operation **606**. Exposing the second location of the substrate to the second laser burst may be similar to exposing the first location of the substrate to the first laser burst, but the laser pulses are delivered to a different location along the dicing path. The second laser burst forms a second column of voids within the substrate. The second location is a location different from the first location, but along the desired dicing path of the substrate. The desired dicing path may be determined by the controller before delivery of the first and second laser bursts to the substrate to form at least a portion of the dicing path.

The method **600** described herein may further include additional iterations of laser burst exposure at different locations along the dicing path, such as a third laser burst exposure at a third location along the dicing path and a fourth laser burst exposure at a fourth location along the dicing path. The number of laser burst exposures may be dependent upon the length of the dicing path, the void diameters, and the pitch between the voids.

The burst-to-burst frequency determines the rate at which the dicing path is formed along the substrate. The burst-to-burst frequency may be determined as the frequency at which the second laser burst exposure occurs after the first laser burst exposure. The decrease in pitch between each void increases the number of voids which should be formed for a similar length dicing path. Therefore, the burst-to-burst frequency may be increased when the pitch is decreased to maintain or enhance the rate of formation of the dicing path. As described herein, the burst-to-burst frequency is greater than about 65 kHz, such as greater than about 200 kHz, such as greater than about 400 kHz.

Methods and apparatus described herein enable lower surface roughness along an edge of a device after being diced from a substrate. The lower surface roughness is caused by reduced void diameter, reduced pitch between each void, and reduced thermal stress along the edge of the device. The reduced void diameter, reduced pitch, and reduced thermal stress are caused by a decrease in pulse width, an increase in pulse repetition rate, and the use of laser wavelengths which are more optically transparent within the substrate.

While the foregoing is directed to embodiments of the present disclosure, other and further embodiments of the disclosure may be devised without departing from the basic scope thereof, and the scope thereof is determined by the claims that follow.

What is claimed is:

1. A method comprising:

forming a plurality of voids within a substrate along a dicing path by exposing the substrate to a first burst of laser pulses at a first location along the dicing path of a respective waveguide combiner, the substrate having a plurality of waveguides, each waveguide having optical device structures, each of the laser pulses within the first burst having a pulse width of less than about 15 picoseconds and a pulse repetition frequency of greater than about 30 MHz and each laser pulse within the first burst forming a respective void within a first column at the first location to form the plurality of voids;

exposing the substrate to a second burst of laser pulses at a second location along the dicing path of the respective waveguide combiner, each laser pulse within the second burst forming the respective void within a second column at the second location to form the plurality of voids, the first column and the second column are spaced by a pitch between a center of the first column and the second column along the dicing path; and

separating the respective waveguide combiner from the substrate.

2. The method of claim **1**, wherein each of the laser pulses has a laser wavelength of about 1.0 μm to about 5 μm.

3. The method of claim **1**, wherein the substrate is a glass material and has a bandgap of about 5 eV to about 12 eV.

4. The method of claim **1**, wherein each laser pulse has a pulse energy of less than about 100 μJ.

5. The method of claim **1**, wherein each of the plurality of voids has a diameter of less than about 2 μm.

6. The method of claim **1**, wherein there are 5 to 40 laser pulses within the first burst.

7. The method of claim **1**, wherein the first burst of laser pulses is repeated at a burst frequency of greater than about 65 KHz.

8. A method comprising:

exposing a substrate to a first plurality of laser pulses at a first location along a dicing path of a respective waveguide combiner, the substrate having a plurality of waveguides, each waveguide having optical device structures, each of the laser pulses within the first plurality of laser pulses having a laser wavelength of about 1.0 μm to about 5 μm and a pulse repetition frequency of greater than about 50 MHz and each laser pulse within the first plurality of laser pulses forming a respective void within a first column at the first location to form a plurality of voids;

exposing the substrate to a second plurality of laser pulses at a second location along the dicing path of the respective waveguide combiner, each laser pulse within the second plurality of laser pulses forming the respective void within a second column at the second location to form the plurality of voids, the first column and the second column are spaced by a pitch between a center of the first column and the second column along the dicing path; and

separating the respective waveguide combiner from the substrate.

9. The method of claim **8**, wherein each of the laser pulses has a pulse width of less than about 12 picoseconds.

10. The method of claim **8**, wherein the pulse repetition frequency is greater than about 1 GHz.

11. The method of claim **8**, wherein the first plurality of laser pulses are delivered to the substrate in a first burst of 5 to 40 laser pulses at the first location on the substrate along the dicing path and the second plurality of laser pulses are delivered to the substrate in a second burst of 5 to 40 laser pulses at the second location on the substrate along the dicing path.

12. The method of claim **11**, wherein the pitch between the first column and the second column is less than about 3 μm.

13. The method of claim **11**, wherein a focal point of each laser pulse of the first burst is delivered at varying depth within the substrate.

14. The method of claim **8**, wherein the laser pulses are delivered to the substrate as a Bessel beam or a Gaussian beam.

15. The method of claim **8**, wherein a focal point of each of a laser delivering the laser pulses is disposed within the substrate during delivery of each of the laser pulses.

16. The method of claim **8**, wherein each laser pulse has a pulse energy of less than about 100 μJ.

17. A non-transitory computer-readable medium storing instructions that, when executed by a processor, cause a computer system to perform operations of:

exposing a substrate to a first plurality of laser pulses at a first location along a dicing path of a respective waveguide combiner, the substrate having a plurality of waveguides, each waveguide having optical device structures, each of the laser pulses within the first plurality of laser pulses having a laser wavelength of about 1.0 μm to about 5 μm and a pulse repetition frequency of greater than about 50 MHz and each laser pulse within the first plurality of laser pulses forming a respective void within a first column at the first location to form a plurality of voids;

exposing the substrate to a second plurality of laser pulses at a second location along the dicing path of the respective waveguide combiner, each laser pulse within the second plurality of laser pulses forming the respective void within a second column at the second location to form the plurality of voids, the first column and the second column are spaced by a pitch between a center of the first column and the second column along the dicing path; and

separating the respective waveguide combiner from the substrate.

18. The medium of claim **17**, wherein the first plurality of laser pulses are delivered to the substrate in a first burst of 5 to 40 laser pulses at the first location on the substrate along the dicing path and the second plurality of laser pulses are delivered to the substrate in a second burst of 5 to 40 laser pulses at the second location on the substrate along the dicing path.

19. The medium of claim **18**, wherein the pitch between the first column and the second column is less than about 3 μm.

20. The medium of claim **19**, wherein the pulse repetition frequency is greater than about 1 GHz.

21. The method of claim **1**, wherein separating the respective waveguide combiner from the substrate comprises mechanically separating the respective waveguide combiner along the dicing path.

22. The method of claim **1**, wherein separating the respective waveguide combiner from the substrate comprises thermally separating the respective waveguide combiner along the dicing path.

23. The method of claim **1**, wherein the optical device structures have dimensions less than one micron.

* * * * *