US012109641B2

(12) **United States Patent**
**Luo et al.**

(10) **Patent No.: US 12,109,641 B2**
(45) **Date of Patent: Oct. 8, 2024**

(54) **OPTICAL DEVICE HAVING STRUCTURAL AND REFRACTIVE INDEX GRADATION, AND METHOD OF FABRICATING THE SAME**

(71) Applicant: **Applied Materials, Inc.**, Santa Clara, CA (US)

(72) Inventors: **Kang Luo**, Santa Clara, CA (US); **Ludovic Godet**, Sunnyvale, CA (US); **Daihua Zhang**, Los Altos, CA (US); **Nai-Wen Pi**, Santa Clara, CA (US); **Jinrui Guo**, San Jose, CA (US); **Rami Hourani**, Santa Clara, CA (US)

(73) Assignee: **APPLIED MATERIALS, INC.**, Santa Clara, CA (US)

( * ) Notice: Subject to any disclaimer, the term of this patent is extended or adjusted under 35 U.S.C. 154(b) by 433 days.

(21) Appl. No.: **17/455,288**

(22) Filed: **Nov. 17, 2021**

(65) **Prior Publication Data**

US 2022/0152724 A1 May 19, 2022

**Related U.S. Application Data**

(60) Provisional application No. 63/114,919, filed on Nov. 17, 2020.

(51) **Int. Cl.**
***B23K 10/00*** (2006.01)
***F21V 8/00*** (2006.01)

(52) **U.S. Cl.**
CPC ..... ***B23K 10/00*** (2013.01); ***G02B 6/0016*** (2013.01); ***G02B 6/0036*** (2013.01)

(58) **Field of Classification Search**
CPC .... B23K 10/00; G02B 6/0016; G02B 6/0036; G02B 6/0065; G02B 27/0172
See application file for complete search history.

(56) **References Cited**

U.S. PATENT DOCUMENTS

5,734,143 A * 3/1998 Kawase ..... H01J 37/32229 219/121.41
9,329,325 B2 * 5/2016 Simmonds ..... G02B 6/0061
(Continued)

FOREIGN PATENT DOCUMENTS

DE 102013220841 A1 * 4/2015 ..... C23C 18/2006
JP 2005246667 A * 9/2005
(Continued)

OTHER PUBLICATIONS

Jeong et. al., "Etching materials with an atmospheric-pressure plasma jet" Plasma Sources Sci. Technol. 7, 1998, pp. 282-285 (Year: 1998).*
(Continued)

*Primary Examiner* — Jeffrey T Carley
*Assistant Examiner* — Jose K Abraham
(74) *Attorney, Agent, or Firm* — Patterson + Sheridan, LLP

(57) **ABSTRACT**

The present disclosure generally relates to a method and apparatus for forming a substrate having a graduated refractive index. A method of forming a waveguide structure includes expelling plasma from an applicator having a head toward a plurality of grating structures formed on a substrate. The plasma is formed in the head at atmospheric pressure. The method further includes changing a depth of the plurality of grating structures with the plasma by removing grating material from the plurality of grating structures.

**25 Claims, 8 Drawing Sheets**

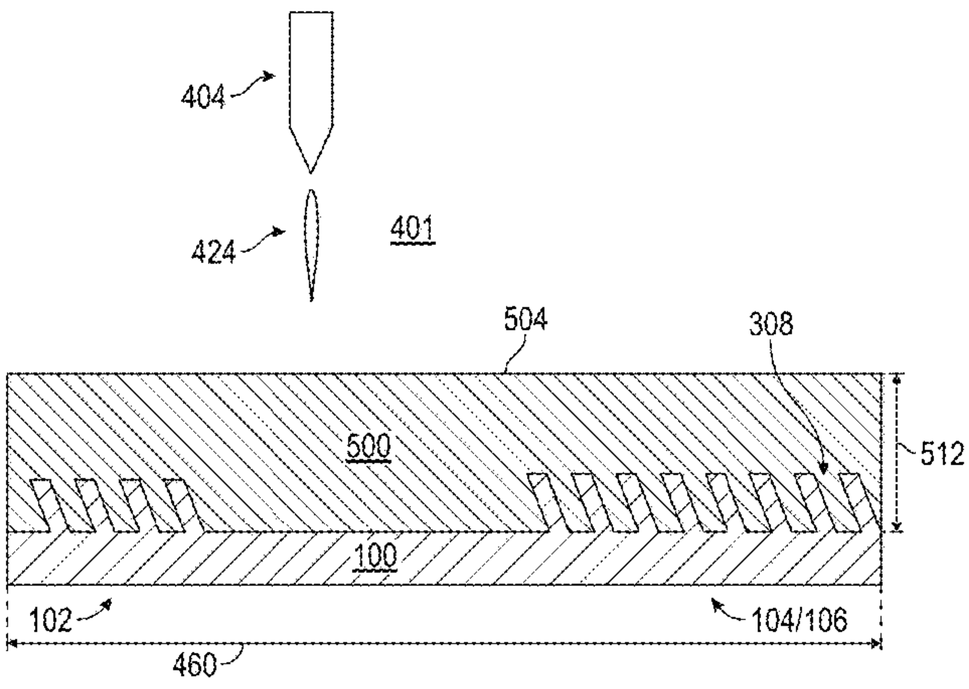


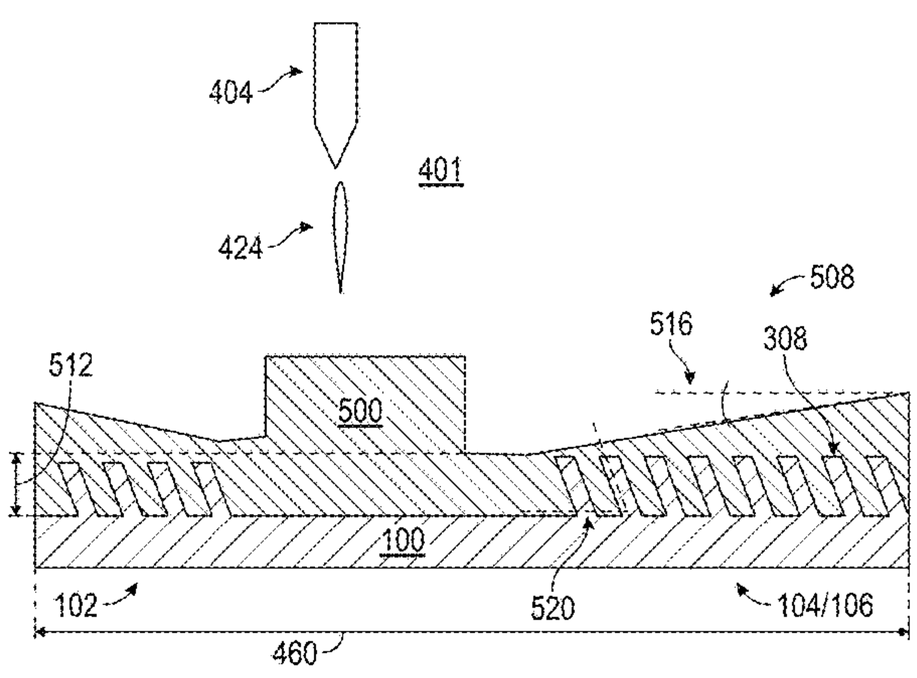

(56) **References Cited**

U.S. PATENT DOCUMENTS

| | | | | |
|---|---|---|---|---|
| 10,442,727 | B2 * | 10/2019 | Melli | C03C 15/00 |
| 10,935,730 | B1 * | 3/2021 | Lou | G02B 27/0172 |
| 10,955,606 | B2 | 3/2021 | Young et al. | |
| 2003/0210880 | A1 * | 11/2003 | Johnson | C23C 16/401 385/129 |
| 2010/0078320 | A1 | 4/2010 | Stowell | |
| 2011/0151270 | A1 * | 6/2011 | Rockstroh | C23C 4/134 427/446 |
| 2012/0009724 | A1 | 1/2012 | Myong | |
| 2012/0261391 | A1 * | 10/2012 | Ihde | H05H 1/42 219/121.52 |
| 2017/0315346 | A1 * | 11/2017 | Tervo | G02B 5/1819 |
| 2018/0081265 | A1 * | 3/2018 | Singh | G03F 7/40 |
| 2018/0149796 | A1 * | 5/2018 | Xu | G02B 27/0101 |
| 2020/0110278 | A1 * | 4/2020 | Yang | G02B 27/0172 |
| 2020/0124782 | A1 * | 4/2020 | Xu | G02B 6/0076 |
| 2020/0124865 | A1 | 4/2020 | Meyer Timmerman Thijssen et al. | |
| 2020/0142120 | A1 | 5/2020 | Meyer Timmerman Thijssen et al. | |
| 2020/0194218 | A1 | 6/2020 | Godet et al. | |
| 2020/0258717 | A1 * | 8/2020 | Gandhiraman | B29C 64/209 |
| 2020/0301062 | A1 | 9/2020 | Young et al. | |
| 2020/0332414 | A1 | 10/2020 | Guo et al. | |
| 2020/0363719 | A1 | 11/2020 | Labonte et al. | |
| 2021/0157148 | A1 * | 5/2021 | Lou | G02B 5/1819 |
| 2021/0325777 | A1 | 10/2021 | Ceballos et al. | |
| 2022/0026603 | A1 | 1/2022 | Ceballos et al. | |
| 2022/0035091 | A1 * | 2/2022 | Xu | G02B 27/0101 |

FOREIGN PATENT DOCUMENTS

| | | | | |
|---|---|---|---|---|
| KR | 20180100044 | A * | 9/2018 | |
| WO | WO-2019180841 | A1 * | 9/2019 | H01M 8/04014 |
| WO | 2020210425 | A1 | 10/2020 | |
| WO | 2021150311 | A1 | 7/2021 | |
| WO | 2022020101 | A1 | 1/2022 | |

OTHER PUBLICATIONS

International Search Report and Written Opinion dated Mar. 14, 2022 for Application No. PCT/US2021/059654.

* cited by examiner

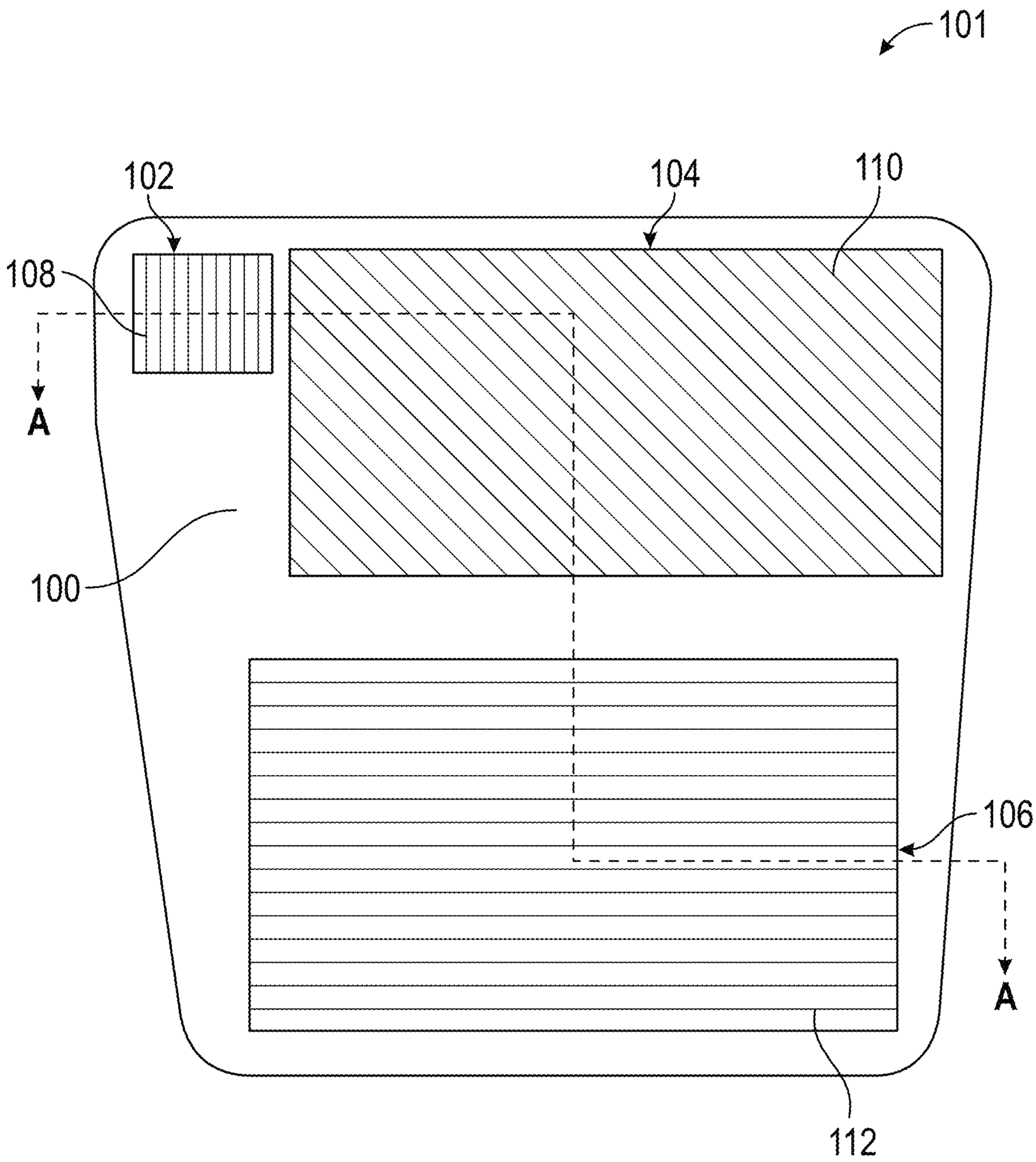


FIG. 1

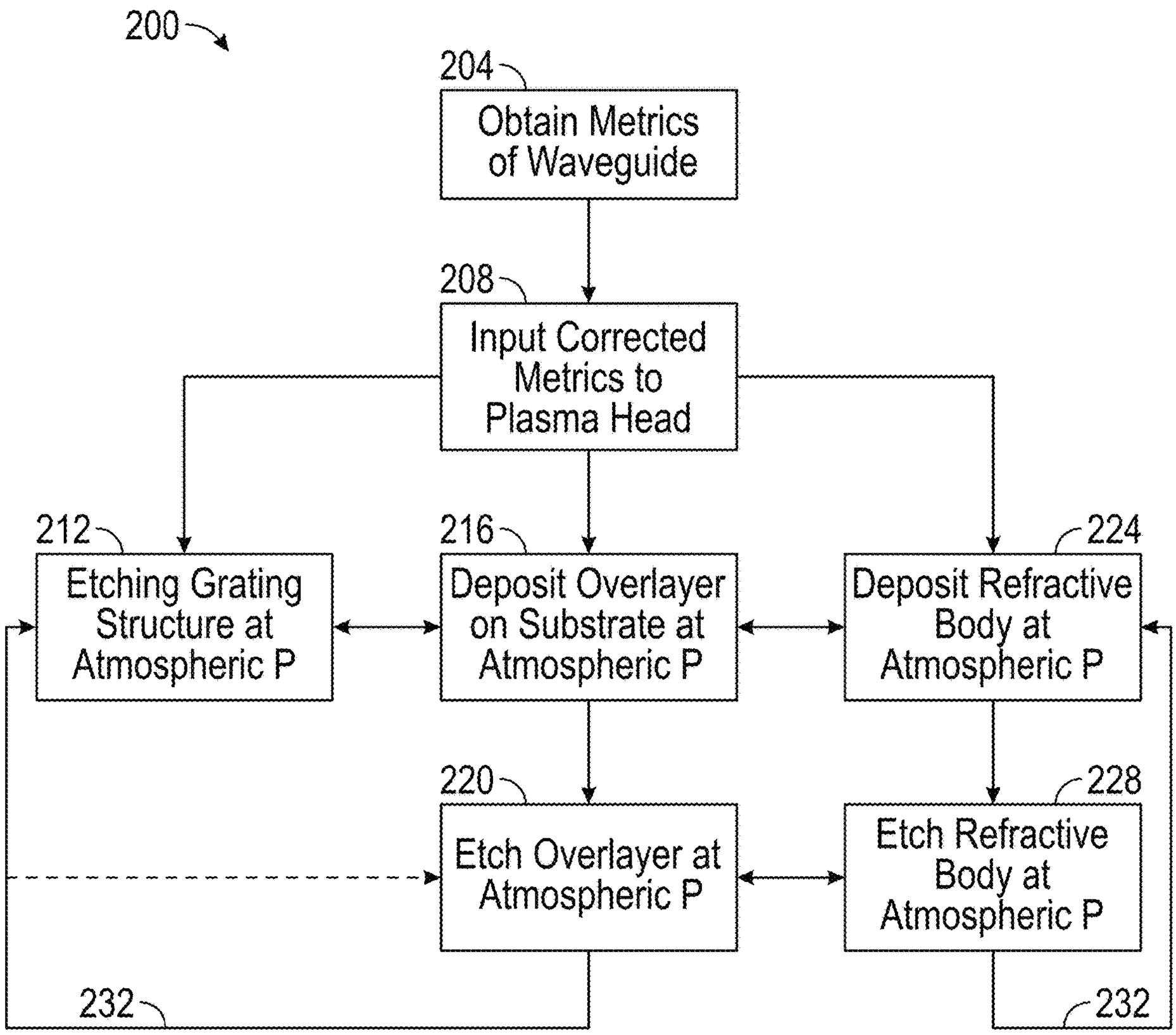
200
204
Obtain Metrics of Waveguide
208
Input Corrected Metrics to Plasma Head
212
Etching Grating Structure at Atmospheric P
216
Deposit Overlayer on Substrate at Atmospheric P
224
Deposit Refractive Body at Atmospheric P
220
Etch Overlayer at Atmospheric P
228
Etch Refractive Body at Atmospheric P
232
232

FIG. 2

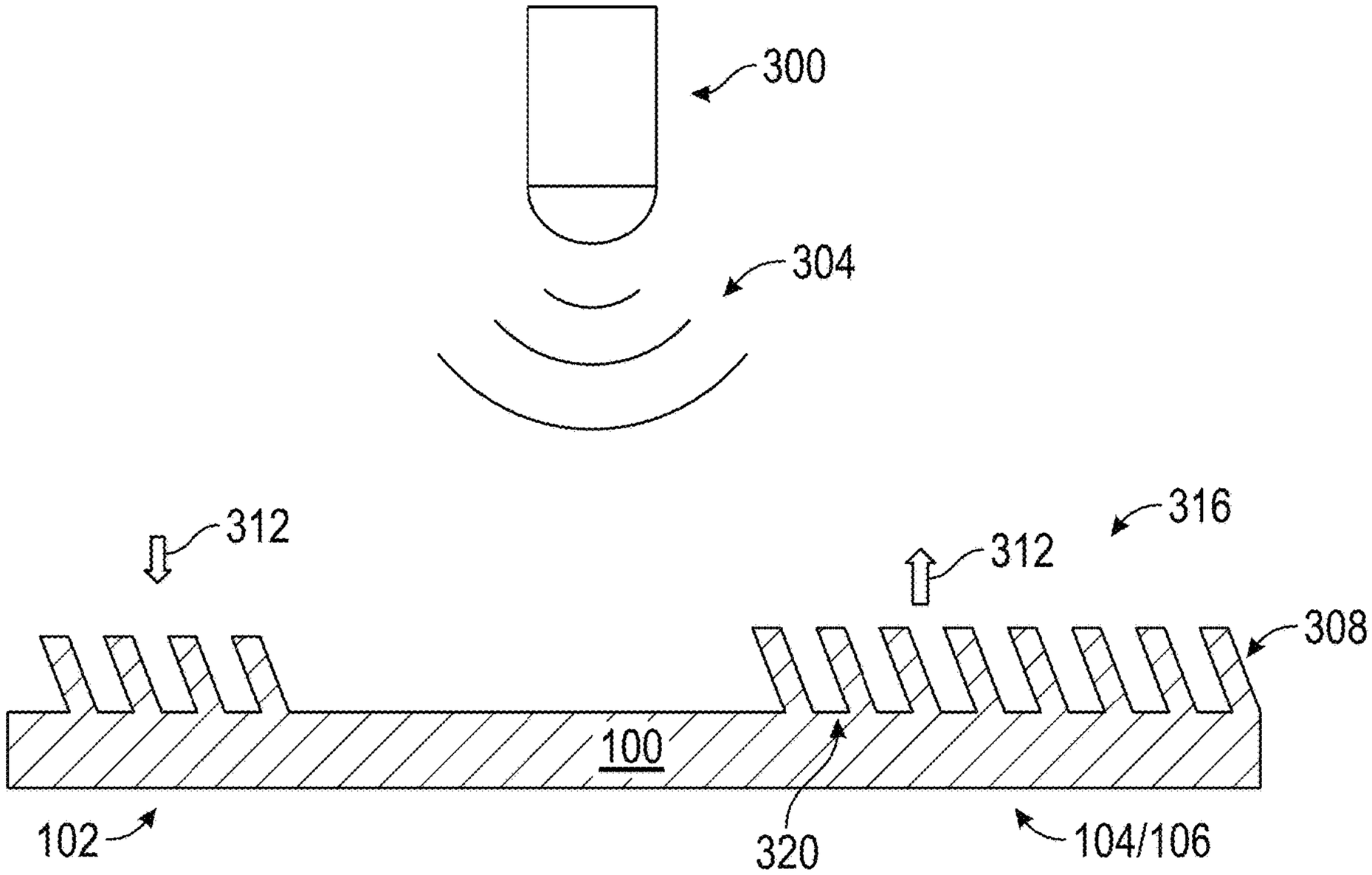


FIG. 3

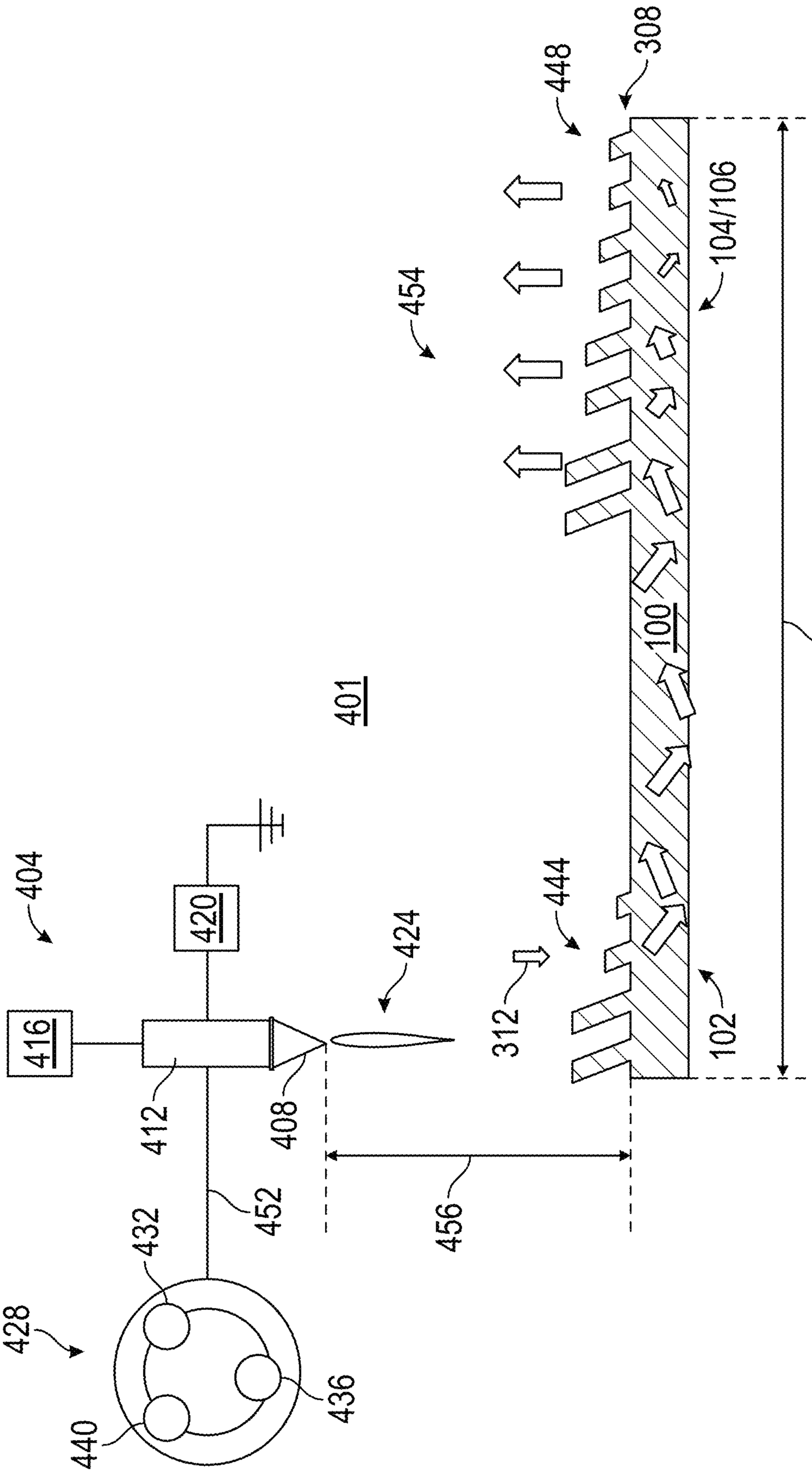
404
420
424
444
448
308
454
104/106
401
100
460
416
312
102
412
408
452
456
432
428
440
436

FIG. 4

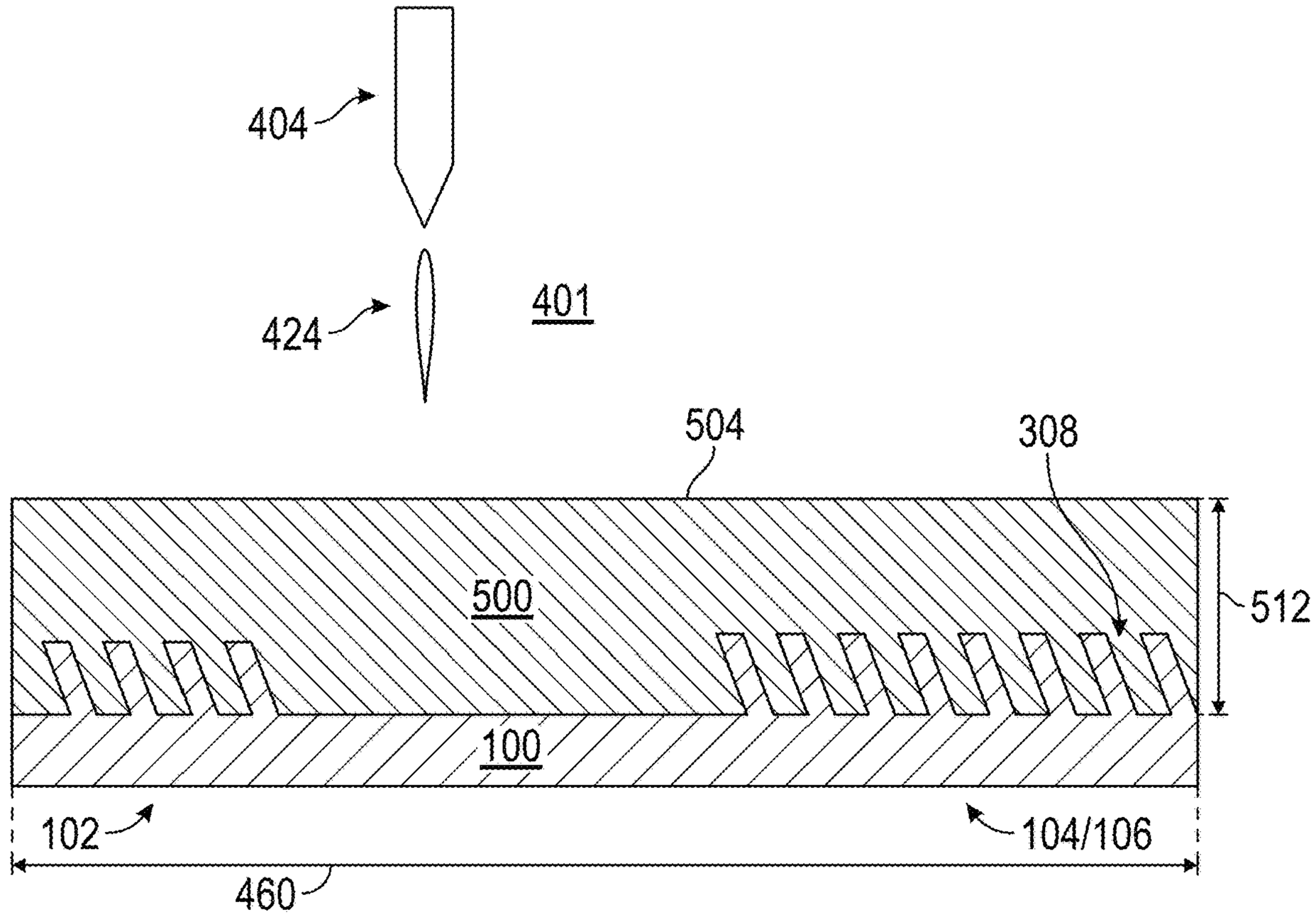
404
424
401
504
308
500
512
100
102
104/106
460

FIG. 5A

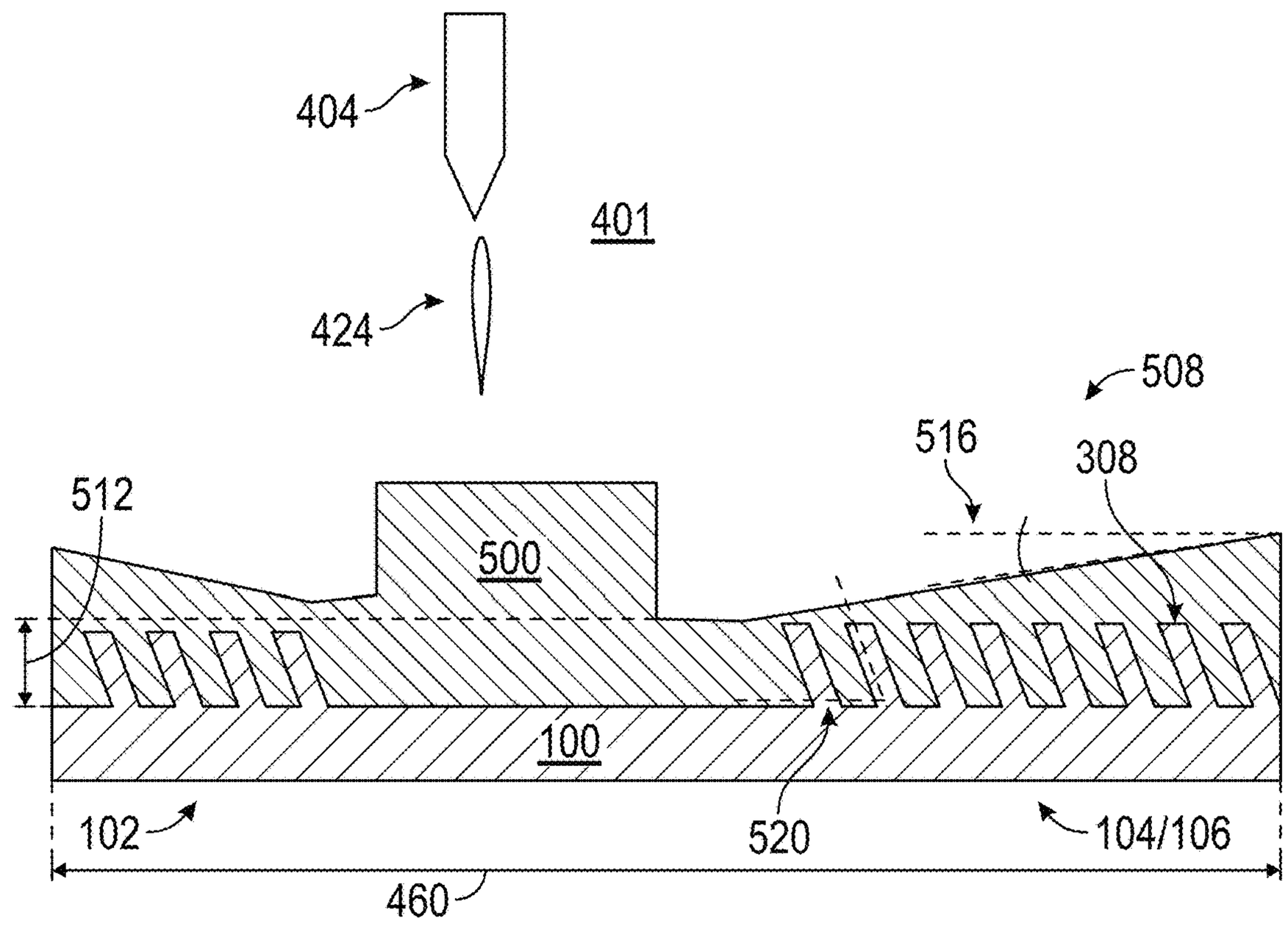
404
401
424
508
516
308
512
500
100
520
102
104/106
460

FIG. 5B

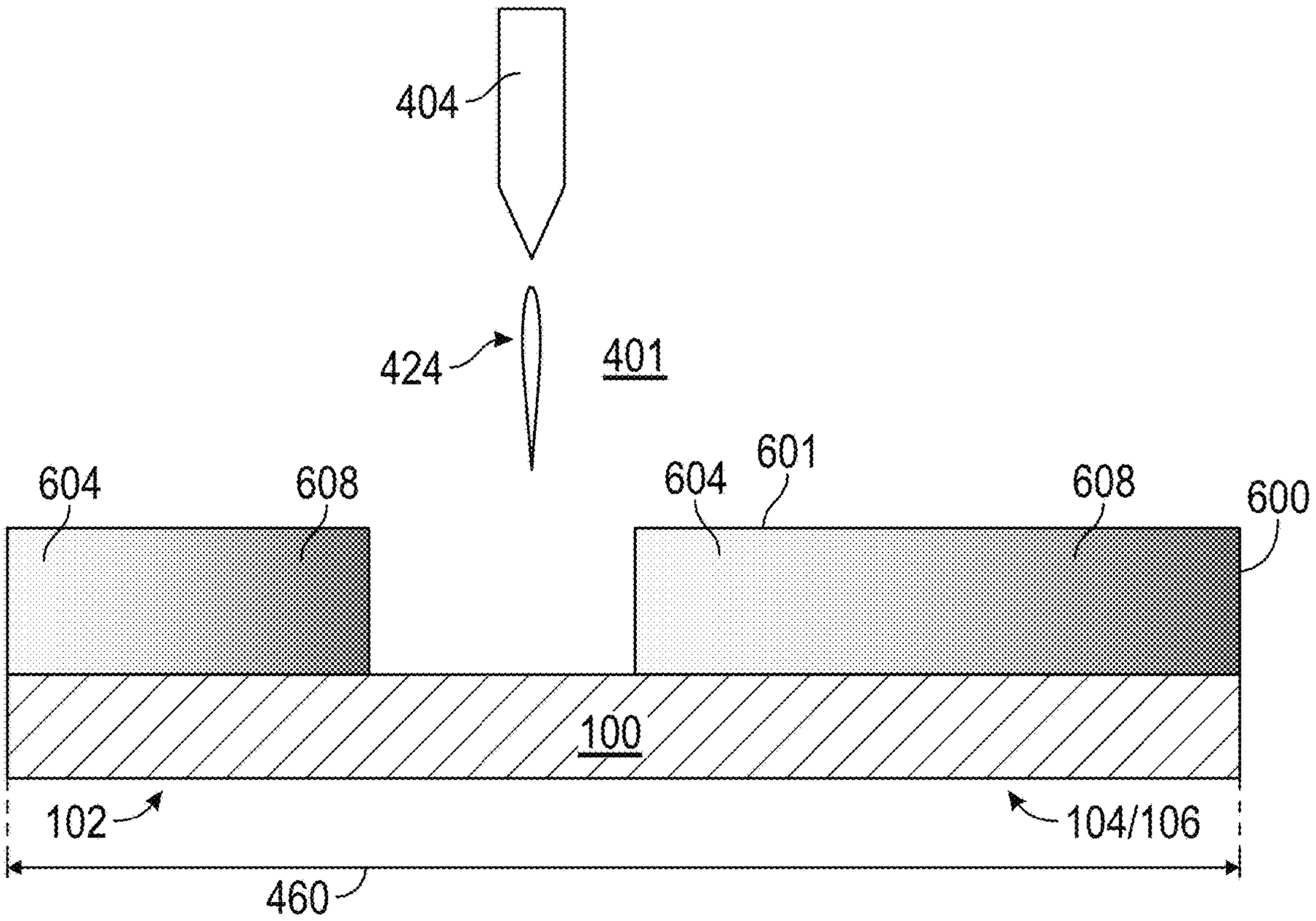
404
424
401
604
608
604
601
608
600
100
102
104/106
460

FIG. 6A

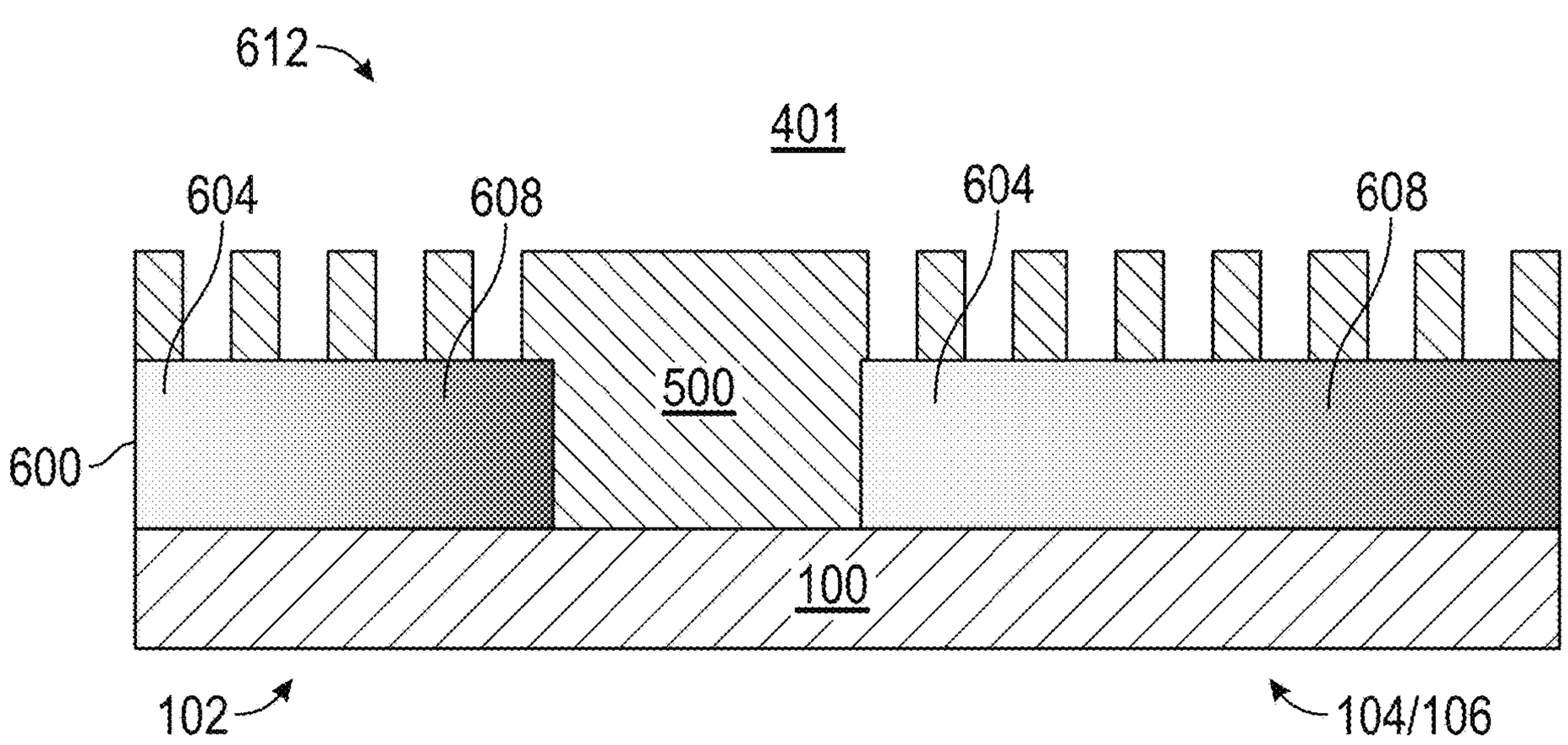
612
401
604
608
604
608
500
600
100
102
104/106

FIG. 6B

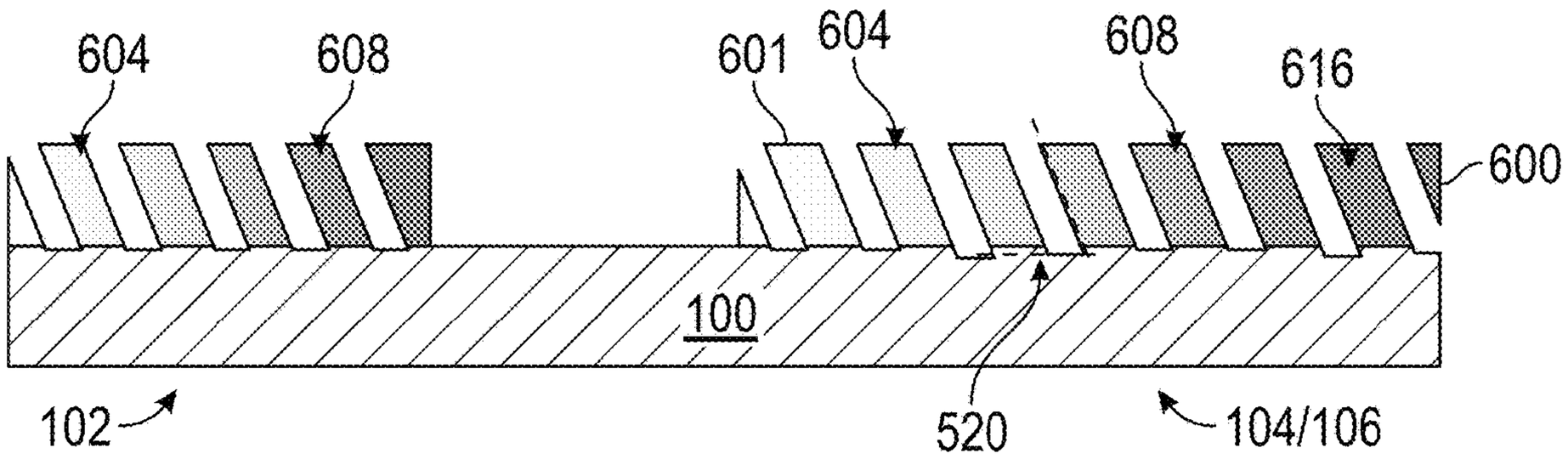
604
608
601
604
608
616
600
100
102
520
104/106

FIG. 6C

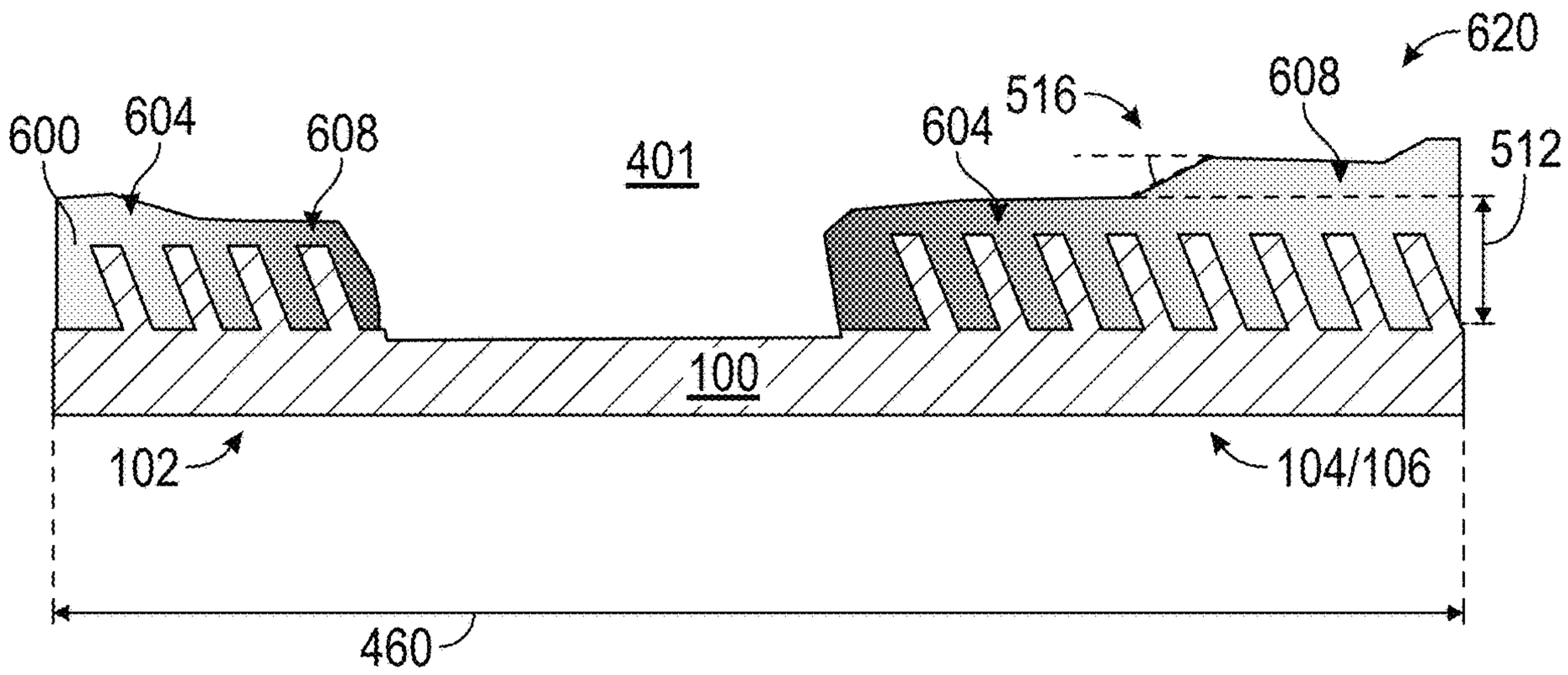
620
600
604
608
401
516
604
608
512
100
102
104/106
460

FIG. 6D

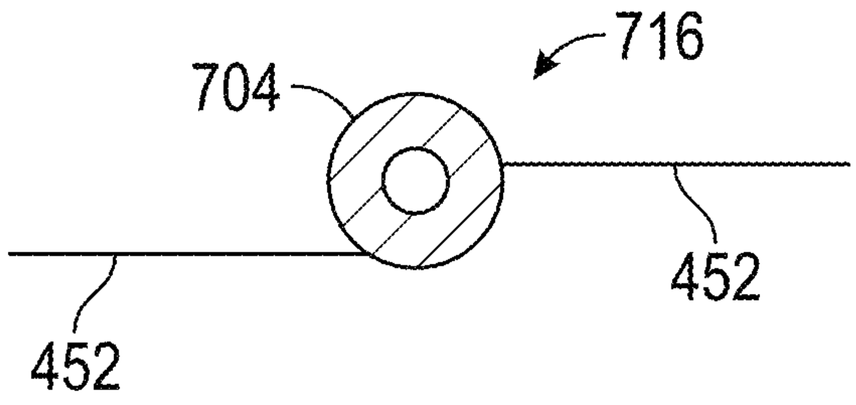


FIG. 7A

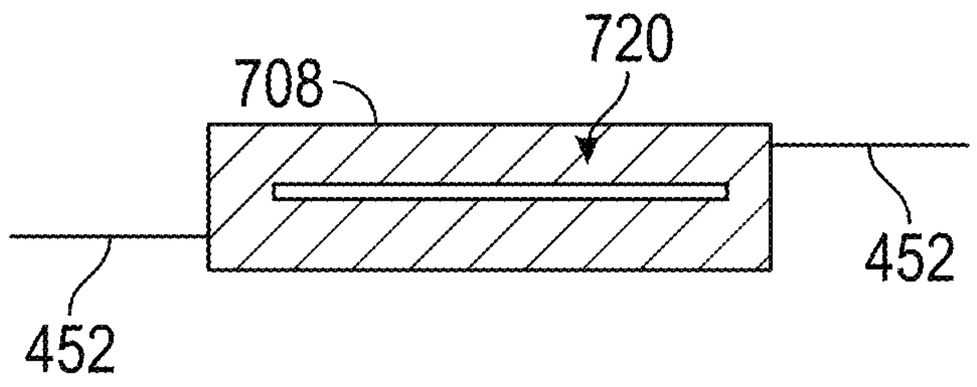


FIG. 7B

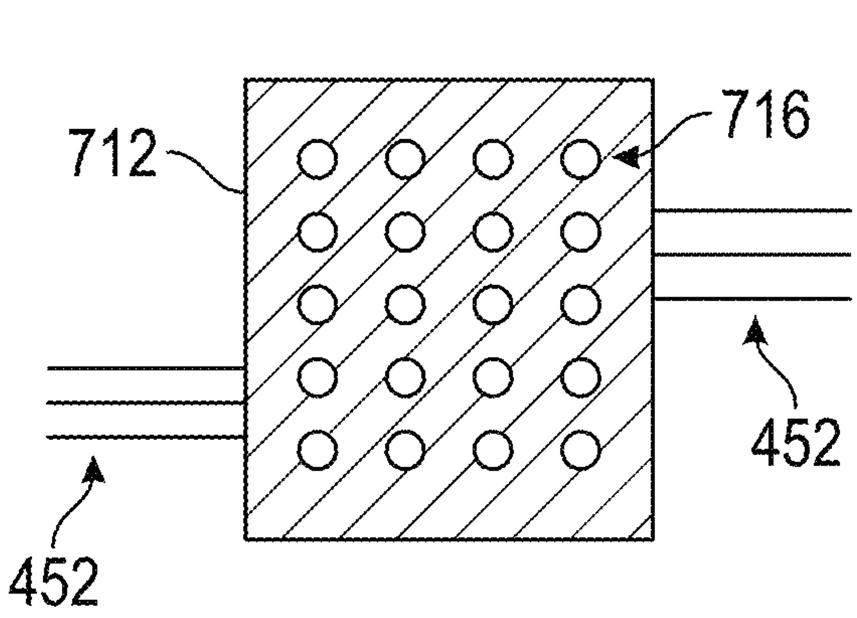


FIG. 7C

# OPTICAL DEVICE HAVING STRUCTURAL AND REFRACTIVE INDEX GRADATION, AND METHOD OF FABRICATING THE SAME

## CROSS-REFERENCE TO RELATED APPLICATIONS

This application claims benefit of U.S. Provisional Application Ser. No. 63/114,919, filed Nov. 17, 2020, all of which is incorporated by reference in its entirety.

## FIELD

Embodiments of the present disclosure generally relate to a method and apparatus for forming a substrate having a graduated refractive index.

## BACKGROUND

### Description of the Related Art

Virtual reality is generally considered to be a computer generated simulated environment in which a user has an apparent physical presence. A virtual reality experience can be generated in 3D and viewed with a head-mounted display (HMD), such as glasses or other wearable display devices that have near-eye display panel, such as lenses, to display a virtual reality environment that replaces an actual environment.

Augmented reality, however, enables an experience in which a user can still see through the display lenses of the glasses or other HMD device to view the surrounding environment, yet also see images of virtual objects that are generated for display and appear as part of the environment. Augmented reality can include any type of input, such as audio and haptic inputs, as well as virtual images, graphics, and video that enhances or augments the environment that the user experiences. As an emerging technology, there are many challenges and design constraints with augmented reality.

Optical devices are used to assist in overlaying images. Generated light is propagated through a waveguide until the light exits the waveguide and is overlayed on the ambient environment. The waveguide includes multiple device structures, e.g., gratings. Among the challenges faced in reducing signal loss in the output signal is displaying images having sufficient clarity for a visual observer. Conventional approaches to addressing this challenge include altering a thickness of the gratings or an encapsulation layer to tune the optical characteristics of the output signal. However, conventional approaches require multiple process steps requiring multiple process chambers in order to obtain the desired optical performance for the waveguide (display), which increase production and decrease yield.

Thus, there remains a need for systems and methods for an improved waveguide.

## SUMMARY

Disclosed herein is a method and apparatus for forming multi-dimensional recess features in controlled, discrete, regions with graduated refractive index or depths across the surface of a substrate. In one example, a method of forming a waveguide structure includes forming a plurality of channels in a grating layer over a substrate. Each channel partially defines a portion of a plurality of grating structures. The method includes expelling plasma from an applicator having a head toward the plurality of grating structures. The plasma is formed in the head at atmospheric pressure. Additionally, the method includes changing a depth of the plurality of grating structures with the plasma by removing grating material from the plurality of grating structures. A change in depth corresponds to a change in a refractive index of the plurality of grating structures.

In another example, an optical processing system includes an applicator having a head. The head is configured to form a plasma therein. A non-transitory computer readable medium stores instructions. The instructions, when executed by a processor, cause a method to be performed in the applicator. The method includes forming a plurality of channels in a grating layer over the substrate. Each channel partially defines a portion of a plurality of grating structures. The method additionally includes expelling a plasma from an applicator having a head toward the plurality of grating structures. The plasma is formed in the head at atmospheric pressure. The method includes changing a depth of the plurality of grating structures with the plasma by removing grating material from the plurality of grating structures. A change in depth corresponds to a change in a refractive index of the plurality of grating structures.

In yet another example, an optical processing system includes an applicator configured to form a plasma. A non-transitory computer readable medium stores instructions. The instructions, when executed by a processor, cause a method to be performed in the applicator. The method includes forming the plasma in the applicator at atmospheric pressure. The method further includes forming a plurality of channels in a grating layer over a substrate. Each channel is partially defined by a portion of a plurality of grating structures. In addition, the method includes changing a refractive index of the plurality of grating structures by removing grating material from the plurality of grating structures. The refractive index corresponds to a change in depth of the plurality of grating structures. The grating material is removed by the plasma.



## BRIEF DESCRIPTION OF THE DRAWINGS

So that the above recited features of the present disclosure can be understood in detail, a more particular description of the disclosure, briefly summarized above, may be had by reference to examples herein, some of which are illustrated in the appended drawings. However, it is to be noted that the appended drawings illustrate only examples and are therefore not to be considered limiting of the disclosure's scope. Accordingly, the appended drawings enable other equally effective examples.

FIG. **1** is schematic top view of an optical device having a plurality of device structures.

FIG. **2** is a flow diagram of one example of the different stages of deposition and etching of the substrate in FIG. **1**.

FIG. **3** is a schematic side view of a measuring instrument configured to determine a profile of light entering and exiting the substrate shown in FIG. **1**, as shown along line A-A.

FIG. **4** shows an applicator disposed within an environment suitable for processing the substrate, shown in FIG. **1**.

FIGS. **5**A-**5**B are schematic sectional views of an overlayer during different stages of deposition and etching of the overlayer.

FIG. **6**A-**6**D, are schematic sectional views of a refractive body having various refractive indices during different stages of deposition and etching of the refractive body.

FIGS. **7A-7C** are alternative examples of a head of the applicator shown in FIG. **4**.

In order to facilitate understanding, identical reference numerals have been used, where possible, to designate identical elements that are common features. It is contemplated that elements and features of one example may be beneficially incorporated into other examples without further recitation.

## DETAILED DESCRIPTION

An apparatus and method for forming a substrate having a graduated refractive index is disclosed herein. A measuring system is used to determine the amount of light entering an optical device. In one example, the optical device has an input coupling region, an intermediate region, and an output coupling region for exiting the amount of light, as in a waveguide combiner. In another example, the measuring system determines the amount of light entering a flat optical device, such as a waveguide having a metasurface with plural optical structures. The measuring system determines a profile of the light entering the optical device and the light exiting the optical device. Each of the input light and output light form a profile, which includes non-uniform light intensities. As light travels and is reflected along the internal surfaces of the optical device, light may escape through the internal surfaces of the optical device through diffraction with grating. Accordingly, when the light exits the intermediate coupling or the output coupling, an intensity profile across the surface of the grating structure can decrease as the distance the light travels increases. The output profile directly diffracts into the human eye and serves as indication of performance of the optical device. As such, blurred images at the edges of the device structures, i.e., gratings, may increase. Data representing an actual light profile is stored in a memory and used to generate a two-dimensional surface profile that will generate a uniform light profile.

The apparatus and method disclosed herein includes expelling plasma from an applicator having a head toward a plurality of grating structures disposed on a substrate. The plasma is formed in the head at atmospheric pressure. In one example, a material layer overlays the substrate. The plasma has a reactant therein capable of reacting with, and thus removing, portions of a material layer, or a portion of the plurality of grating structures. Additionally, the method includes changing a depth of the plurality of grating structures with the plasma by removing material therefrom. The applicator is movable with respect to the substrate, such that the plasma head is capable of being positioned over different discrete areas of the surface of the substrate, including over the material layer, or over the plurality of grating structures. Discrete portions of the material layer are etched by the plasma, in order to remove a portion of the material, and thereby form a three dimensional recess inwardly of the surface of the material.

As disclosed herein, generating the two-dimensional surface profile can include etching gratings to change a height of the gratings of the waveguide combiner. Alternatively, generating the two-dimensional surface profile includes depositing an overlayer, such as an encapsulation layer. In another example, etching and deposition are used to create the two-dimensional surface profile. Conventional approaches to depositing an encapsulation layer or etching gratings include the use of one or more processing chambers to perform etching, deposition, and or photolithography. By utilizing an atmospheric pressure plasma jet (APPJ), precise control of grating depth, grating refractive index, and encapsulation thickness across the optical device are obtained in a manner not achievable by conventional approaches. A diffraction efficiency of the optical device is increased by modifying a two-dimensional surface profile of an overlayer or a two-dimensional surface profile of gratings of the optical device, as disclosed herein. Advantageously, the two dimensional surface profile can be achieved at high throughput and at atmospheric pressure by etching and depositing with the APPJ.

FIG. **1** is a schematic top view of an optical device **101** having a plurality of device structures. It is to be understood that the substrate **100** described herein is a waveguide, in one example. As noted above, the optical device **101** is a flat optical device, such as a metasurface that has a plurality of device structures. In another example, the optical device **101** is a waveguide combiner, such as an augmented reality waveguide combiner having a plurality of device structures. The device structures are nanostructures having sub-micron dimensions, e.g., nano-sized dimensions, such as critical dimensions less than 1 μm. The substrate **100** includes an input coupling region **102** defined by a plurality of gratings **108**, an intermediate region **104** defined by a plurality of gratings **110**, and an output coupling region **106** defined by a plurality of gratings **112**. The input coupling region **102** receives incident beams of light (a virtual image) having an intensity from a microdisplay. Each grating of the plurality of gratings **108** splits the incident beams into a plurality of modes, each beam having a mode.

Zero-order mode (T0) beams are refracted back or lost in the substrate **100** (i.e., waveguide combiner), positive first-order mode (T1) beams are coupled though the substrate **100** to the intermediate region **104**, and negative first-order mode (T−1) beams propagate in the substrate **100** at a direction opposite to the T1 beams. The incident beams are split into T1 beams that have all of the intensity of the incident beams in order to direct the virtual image to the intermediate region **104**. One approach to split the incident beam into T1 beams that have all of the intensity of the incident beams is to optimize the slant angle of each grating of the plurality of gratings **108** to suppress the T−1 beams and the T0 beams. The T1 beams undergo total-internal-reflection (TIR) through the substrate **100** until the T1 beams come in contact with the plurality of gratings **110** in the intermediate region **104**. A portion of the input coupling region **102** may have gratings **108** with a slant angle different than the slant angle of gratings **108** from an adjacent portion of the input coupling region **102**.

The T1 beams contact a grating of the plurality of gratings **110**. The T1 beams are split into T0 beams refracted back or lost in the substrate **100**, T1 beams that undergo TIR in the intermediate region **104** until the T1 beams contact another grating of the plurality of gratings **110**, and T−1 beams that are coupled through the substrate **100** to the output coupling region **106**. The T1 beams that undergo TIR in the intermediate region **104** continue to contact gratings of the plurality of gratings **110** until either the intensity of the T1 beams coupled through the substrate **100** to the intermediate region **104** is depleted, or remaining T1 beams propagating through the intermediate region **104** reach the end of the intermediate region **104**. The plurality of gratings **110** must be tuned to control the T1 beams coupled through the substrate **100** to the intermediate region **104** in order to control the intensity of the T−1 beams coupled to the output coupling region **106** to modulate a field of view of the virtual image produced from the microdisplay from a user's perspective and increase a viewing angle from which a user can view the virtual image. One approach to control the T1 beams

coupled through the substrate **100** to the intermediate region **104** is to optimize the slant angle of each grating of the plurality of gratings **110** to control the intensity of the T−1 beams coupled to the output coupling region **106**. A portion of the intermediate region **104** may have gratings **110** with a slant angle different than the slant angle of gratings **110** from an adjacent portion of the intermediate region **104**. Furthermore, the gratings **110** may have slant angles different than the slant angles of the gratings **108**.

The T−1 beams coupled through the substrate **100** to the output coupling region **106** undergo TIR in the substrate **100** until the T−1 beams contact a grating of the plurality of gratings **112** where the T−1 beams are split into T0 beams refracted back or lost in the substrate **100**, T1 beams that undergo TIR in the output coupling region **106** until the T1 beams contact another grating of the plurality of gratings **112**, and T−1 beams coupled out of the substrate **100**. The T1 beams that undergo TIR in the output coupling region **106** continue to contact gratings of the plurality of gratings **112** until either the intensity of the T−1 beams coupled through the substrate **100** to the output coupling region **106** is depleted, or remaining T1 beams propagating through the output coupling region **106** have reached the end of the output coupling region **106**. The plurality of gratings **112** must be tuned to control the T−1 beams coupled through the substrate **100** to the output coupling region **106** in order to control the intensity of the T−1 beams coupled out of the substrate **100** to further modulate the field of view of the virtual image produced from the microdisplay from the user's perspective and further increase the viewing angle from which the user can view the virtual image. One approach to control the T−1 beams coupled through the substrate **100** to the output coupling region **106** is to optimize the slant angle of each grating of the plurality of gratings **112** to further modulate the field of view and increase the viewing angle. A portion of the intermediate region **104** may have gratings **110** with a slant angle different than the slant angle of gratings **110** from an adjacent portion of the intermediate region **104**. Furthermore, the gratings **112** may have slant angles different than the slant angles of the gratings **108** and the gratings **110**.

A material of the substrate **100** includes, but is not limited to, one or more of silicon (Si), silicon dioxide (SiO2), glass, plastic, polycarbonate, and sapphire-containing materials. In some embodiments, the substrate **100** includes doped glass. The substrate **100** may include other suitable materials, including, but not limited to, amorphous dielectrics, non-amorphous dielectrics, crystalline dielectrics, silicon oxide, polymers, and combinations thereof. In some examples, which can be combined with other embodiments described herein, the substrate includes a transparent material. Suitable examples may include an oxide, sulfide, phosphide, telluride or combinations thereof. In one example, the substrate includes silicon (Si), silicon dioxide ($SiO_2$), germanium (Ge), silicon germanium (SiGe), sapphire, and high-index transparent materials such as high-refractive-index glass. For example, the substrate **100** includes glass doped with a heavy dopant such as lanthanum (La), zirconium (Zr), zinc (Zn), and the like. The materials of the substrate **100** may further have rollable and flexible properties. In one example, the material of the substrate **100** includes, but is not limited to, materials having a refractive index between about 1.5 and about 2.4. For example, the substrate **100** may be a doped high index substrate having a refractive index between about 1.7 and about 2.4.

A portion of the intermediate region **104** may have gratings **110** with a slant angle different than the slant angle of gratings **110** from an adjacent portion of the intermediate region **104**. Furthermore, the gratings **110** may have slant angles different than the slant angles of the gratings **108**. A portion of the output coupling region **106** may have gratings **112** with a slant angle different than the slant angle of gratings **112** from an adjacent portion of the output coupling region **106**. Furthermore, the gratings **112** may have slant angles different than the slant angles of the gratings **108** and the gratings **110**.

The depth of the gratings **108**, **110**, or **112** may vary across the input coupling region **102**, the intermediate region **104**, and/or the output coupling region **106** in examples described herein. In some examples, the depth of the gratings **108**, **110**, or **112** vary smoothly over the grating area. In one example, the depth of the gratings **108**, **110**, or **112** may range from about 10 nm to about 500 nm across the grating area. The grating area in an example can range from approximately 20 mm to approximately 50 mm on a given side. Therefore, as one example, the angle of the change in the depth of the gratings may be on the order of 0.0005 degrees.

The refractive index of the gratings **108**, **110**, or **112** may vary across the input coupling region **102**, the intermediate region **104**, and/or the output coupling region **106** in examples described herein. In some examples, the refractive index of the gratings **108**, **110**, or **112** vary smoothly over the grating area. In one example, the refractive index of the gratings **108**, **110**, or **112** may range from about 1.3 to 2.5 across the grating area. The grating area, in an example, can range from about 20 mm to about 50 mm.

FIG. **2** is a flow diagram of a method **200** of etching and depositing materials disposed on a substrate, e.g., the substrate **100** in FIG. **1**, at atmospheric pressure. Different stages of the method **200** for etching and depositing materials disposed on the substrate are illustrated in FIGS. **2**-**6**D.

Method **200** begins at Operation **204** where metrics of a waveguide is determined, as illustrated in FIG. **3**. FIG. **3** is a schematic side view of a measuring instrument **300** adjacent to the substrate **100** shown in FIG. **1**, a cross-section of which is shown taken along line A-A. The measuring instrument **300** transmits and receives a signal **304** of light **312** entering and exiting the substrate **100**. The measuring instrument **300** determines an intensity of the light **312** that enters the input coupling region **102** and an intensity of the light **312** that exits each of the intermediate region **104** and the output coupling region **106**. Herein, gratings **308** refer to one or more of gratings **108**, **110**, or **112** shown in FIG. **1**. In one example, which can be combined with other examples described herein, regions of the device structures correspond to one or more gratings **308**, such as a first grating, a second grating, and a third grating. The gratings **308** can also be referred to a plurality of device structures when disposed on a metasurface, in another example. Gratings **308** are formed on the substrate **100**, and the gratings **308** have a plurality of channels **320** formed therebetween. A profile **316** of the intensity of light **312** entering the gratings **308** of the input coupling region **102** is determined. The profile **316** also includes data corresponding to the intensity of light **312** exiting the gratings **308** of each of the intermediate region **104** and the output coupling region **106**. The gratings **308** are substantially uniform. Light intensity of the profile **316** is non-uniform, as the light intensity is reduced over a length of the intermediate region **104** and the output coupling region **106**. In one example, the measuring instrument **300** is an optical measuring device, such as a laser. In one example, the gratings **308** are generated by a lithography and dry etch process, discussed in greater detail below.

At operation **208**, the determined metrics are corrected and loaded into an applicator **404** configured to form a plasma **424**. FIG. **4** shows the applicator **404** disposed within an environment **401** suitable for processing the substrate **100**, shown in FIG. **1**. The applicator **404** is coupled to a controller **428**. One or more transmission lines **452** connect the controller **428** to the body **412**, in one example. The profile **316** generated by the measuring instrument **300** is used to generate a target profile that is uploaded to the controller **428**. The target profile corrects non-uniformities in the profile **316**. The target profile includes data representing structural details and a refractive index of the gratings **308**.

The applicator **404** includes a head **408** and a body **412**. The body **412** is electrically coupled to a power source **420** through one or more transmission lines **452**. The power source **420** is grounded. A gas source **416** is fluidly coupled to the body **412**, and is configured to provide a gas to an internal space of the body **412**. In one example, the gas provided to the internal space of the body **412** is one or more of argon (Ar), helium (He), nitrogen ($N_2$), oxygen ($O_2$), or hydrogen ($H_2$). A DC power of the applicator is between about 5 kV and about 15 kV, such as about 10 kV or 12 KV. In another example, the DC power of the applicator **404** is between about 10 kHz to about 100 kHz. An RF power is applied between about 300 watts and about 5 GHz, such as about 1 GHz, or about 2 GHz.

In one example, the method **200** proceeds to Operation **212** where the gratings **308** of the substrate **100** are etched at atmospheric pressure. Plasma power, distance from the head to substrate, and relative head speed with respect to the substrate are parameters that can create a target profile. The distance **456** is between about 0.5 mm to about 10 mm, in one example. In another example, the distance **456** is between about 1.5 mm and about 7 mm, such as about 6 mm. In yet another example, the distance **456** is between about 2.0 mm and about 5.5 mm, such as about 5 mm. In another example, the distance **456** is between about 3.5 mm and about 4.5 mm, such as about 3.75 mm or about 4.25 mm. The relative speed between the head **408** relative to the substrate **100** is between about 1 mm/s to about 30 mm/s, such as about 2.5 mm/s, or about 3.25 mm/s. In another example of the disclosure herein, the relative speed is about 5 mm/s to about 25 mm/s, such as about 17 mm/s or about 20.5 mm/s. In yet another example, the relative speed is between about 7.5 mm/s and about 15 mm/s, such as about 10 mm/s or about 12.5 mm/s.

In one example, the plasma **424** is formed in the environment **401** when gas is introduced into the body **412** of the applicator **404**. Ions are created when the gas is disassociated within the plasma **424** by application of the power source **420**. The ions are expelled toward the substrate **100**, and upon impact with the gratings **308**, the ions remove molecules from the gratings **308**. A distance **456** from the head **408** of the applicator **404** to the substrate **100** is controlled by parameters of the target profile. The distance **456** to the substrate **100** is controlled to remove portions of the gratings **308**, until the target profile is achieved. The target profile can include each or both of an input profile **444** and an output profile **448**. In one example, the applicator **404** is an atmospheric pressure plasma jet (APPJ).

As the light **312** enters the input coupling region **102**, light **312** is reflected between a top and bottom surface of the substrate **100**, as the light **312** travels a length **460** of the substrate **100**. The intensity of the light **312** along the length **460** of the substrate **100** decreases as the distance from the input coupling region **102** increases. The output profile **448** enables a light profile **454** to be uniform across the gratings **308**, thus reducing blur or other visual defects near the periphery of the gratings **308**. Thus, the output profile **448** increases the diffraction efficiency of the intermediate region **104** and the output coupling region **106**.

The controller **428** signals to at least one or more electrodes (not shown) coupled to the body **412** of the applicator **404**, the gas source **416**, or the power source **420**. The controller **428** includes a processor **432**, a memory **436**, and support circuits **440** that are coupled to one another. The processor **432** may be one of any form of general purpose microprocessor, or a general purpose central processing unit (CPU), each of which can be used in an industrial setting, such as a programmable logic controller (PLC), supervisory control and data acquisition (SCADA) systems, or other suitable industrial controller. The memory **436** is non-transitory and may be one or more of readily available memory such as random access memory (RAM), read only memory (ROM), or any other form of digital storage, local or remote. The memory **436** contains instructions, that when executed by the processor **432**, facilitates execution of the method **200**. The instructions in the memory **436** are in the form of a program product such as a program that implements the method of the present disclosure. The program code of the program product may conform to any one of a number of different programming languages. Illustrative computer-readable storage media include, but are not limited to: (i) non-writable storage media (e.g., read-only memory devices within a computer such as CD-ROM disks readable by a CD-ROM drive, flash memory, ROM chips, or any type of solid-state non-volatile semiconductor memory) on which information is permanently stored; and (ii) writable storage media (e.g., hard-disk drive or any type of solid-state random-access semiconductor memory) on which alterable information is stored. Such computer-readable storage media, when carrying computer-readable instructions that direct the functions of the methods described herein, are examples of the present disclosure. Operation **212** can proceeded directly to Operation **216**, disclosed in detail below, as shown in FIG. **3**. In yet another example, the method **200** proceeds from Operation **208** to Operation **216**.

At Operation **216** an overlayer **500** is deposited over the substrate **100** at atmospheric pressure, as shown in FIG. **5**A. The overlayer **500** having a substantially planar surface **504** is deposited to a desired thickness over the substrate **100**. In one example, the overlayer **500** is an encapsulation layer. The encapsulation layer includes materials such as metals and dielectrics of varying dielectric constants and refractive indices. The encapsulation layer reduces glare or reflection on the substrate **100**. The overlayer **500** can be deposited to a depth **512** and a specified length **460**.

The overlayer **500** is applied to gratings **308** with one of an FCVD, PVD or spin coating methods, in one example. In another example, plasma **424** is formed in the environment **401** by the applicator **404** in order to deposit the overlayer **500**. The overlayer **500** is formed by vaporizing a precursor with the plasma **424**. Exemplary materials for the overlayer **500**, includes at least one of polyimides, polyimide blends, metal-organic polyimide blends, metal oxides, metal nitrides, $Al_2O_3$, $SiO_2$, TiO, TaO, AlN, SiN, $SiO_xN_x$, TiN, TaN, any of the materials forming the substrate **100** or any one of the gratings **308**.

In one example, the overlayer **500** herein enables control over diffraction efficiency along the gratings **308**. The low refractive index contrast of the overlayer **500** (e.g., about 0.2 or less) decreases the diffraction efficiency compared to

un-encapsulated gratings (i.e., gratings without the overlayer **500**). Device structures not having the overlayer **500** may be surrounded by air (i.e., refractive index of 1) contacting the surface or may include a global encapsulant having a low refractive index (e.g., refractive index contrast greater than about 0.2). In some embodiments, the diffraction efficiency of the gratings **308** may be about 2.5% or less, alternatively from about 1% to about 50% such as from about 1% to about 40%, such as from about 1% to about 30%, such as from about 1% to about 20%, such as from about 1% to about 10%, such as from about 1% to about 5%, such as from about 1% to about 2.5%, alternatively from about 2.5% to about 5%, alternatively from about 5% to about 10%, alternatively from about 10% to about 20%, alternatively from about 20% to about 30%, alternatively from about 30% to about 40%, or alternatively from about 40% to about 50%.

The overlayer **500** has a refractive index of from about 1.6 to about 2.4, such as from about 1.7 to about 2.3, such as from about 1.8 to about 2.2, such as from about 1.8 to about 2, such as from about 1.9 to about 2, or such as from about 1.95 to about 2. Alternatively, the overlayer **500** has a refractive index from about 2 to about 2.2, such as from about 2 to about 2.1, such as from about 2 to about 2.05, such as about 2, or alternatively from about 1.8 to about 1.85. In another example, the overlayer **500** has a refractive index from about 1.85 to about 1.9, alternatively from about 1.9 to about 1.95, alternatively from about 1.95 to about 1.96, alternatively from about 1.96 to about 1.97, or alternatively from about 1.97 to about 1.98. In yet another example, the overlayer **500** has a refractive index from about 1.98 to about 1.99, alternatively from about 1.99 to about 2, alternatively from about 2 to about 2.01, alternatively from about 2.01 to about 2.02, or alternatively from about 2.02 to about 2.03. Another exemplary refractive index of the overlayer **500** is from about 2.03 to about 2.04, alternatively from about 2.04 to about 2.05, alternatively from about 2.05 to about 2.1, alternatively from about 2.1 to about 2.2, or alternatively from about 1.95 to about 2.05.

In another example, the overlayer **500** is a mask layer. The mask may be formed from a photoresist, a hard mask material or other suitable material. The photoresist may be a positive-tone photoresist and/or a negative-tone photoresist, each being capable of undergoing a chemically amplified reaction. The mask layer is an organic polymer material, in one example. Other suitable materials may be used for the mask, including other fluorine containing polymers. In another example, the mask can be at least one of a positive or negative tone photoresist, a metal-containing hardmask, a carbon-containing hardmask, an organic planarization layer (OPL), and other suitable hardmask materials.

In another example, the overlayer **500** is a grayscale resist, or grayscale mask. The grayscale resist can be deposited in any pattern to produce the desired depth and shape of the substrate **100**. Gratings **308** of varying depth can be created using gray-tone lithography, also known as grayscale lithography. Grayscale lithography is a one-step process used to create three-dimensional microstructures in a photoresist layer using an optical gray-tone (or grayscale) mask. Grayscale masks let varying amounts of light pass through to create depth-modulated gratings **308**. Using grayscale lithography to create depth-modulated gratings **308** allows for fewer processing operations and increases wedge resolution of a surface profile **508**. As one example, the surface profile **508** can have a concave or convex pattern. In another example, a one-dimensional or two-dimensional grayscale mask pattern may be used to shape the grating height of the gratings **308**. Additionally, each of the gratings **308** can have an angle **520** measured relative to the planar surface **504**. The angle **520** is, for example, about 0 degrees to about 70 degrees.

As shown in FIG. **5**B, portions of the overlayer **500** are removed by etching with plasma **424** from the applicator, at Operation **220**. The surface profile **508** corresponds to a refractive index of the overlayer **500** or substrate **100**. The surface profile **508** includes the depth **512**, surface angle **516**, and length **460** parameters. Additional parameters such as the distance **456** from the head **408** of the applicator **404** to the substrate **100** (as shown in FIG. **4**) are controlled to etch the overlayer **500** until the surface profile **508** is achieved. As noted above, adjusting parameters such as plasma power and speed of the applicator **404** relative to the length **460** of the substrate **100**, can also be adjusted to create the surface profile **508**. In one example, the surface profile **508** can include portions having linear or non-linear slopes (i.e., a non-linear gradation) with respect to the substrate **100**. Additionally, the surface profile **508** can include several portions that oscillate with respect to the substrate **100**.

At Operation **224**, a refractive body **600** is deposited on the substrate **100** at atmospheric pressure. The refractive body **600** has a planar surface **601** and includes a first refractive layer **604** and a second refractive layer **608**. Although the second refractive layer **608** is shown as a single feature, the second refractive layer **608** can include additional refractive layers. As such, the second refractive layer **608** can include additional individual layers having different refractive indices. Accordingly, the change in the composition of refractive body **600** from first refractive layer **604** to the second refractive layer **608** is gradual. Otherwise stated, the refractive body **600** is deposited such that no distinct or visible layers are observed between the first refractive layer **604** and the second refractive layer **608**. Advantageously, the refractive index of the refractive body **600** gradually modulates independently of the thickness of the refractive body **600**. As shown in FIG. **6**A, the refractive indices of the refractive body **600** modulate along the length **460** of the substrate **100**. In another example, the refractive indices of the refractive body **600** modulate in a direction perpendicular to the length **460**. The diffraction efficiency of the refractive body **600** is modified by applying different materials during deposition of the refractive layers **604**, **608**.

As shown, in FIG. **6**A, the first refractive layer **604** is deposited in contact and adjacent to the second refractive layer **608**. FIGS. **6**A-**6**D are schematic sectional views of the substrate **100** during deposition and removal of an overlayer having different refractive indices.

One or more gases from the gas source **416** are flowed into the environment **401** to deposit the refractive body **600** (i.e., the first refractive layer **604** and the second refractive layer **608**) onto the substrate **100** using the applicator **404**. Exemplary precursor gases include nitrogen gas ($N_2$), nitrogen dioxide ($NO_2$), fluorine gas ($F_2$), oxygen gas ($O_2$), hydrogen gas (H2), $H_2O$ in vapor form, methane (CH4), carbon monoxide (CO), methane ($CH_4$), and carbon dioxide ($CO_2$), argon (Ar), and helium (He).

The first refractive layer **604** may be a sol-gel solution or a nanoparticle solution. The first solution may include silicon dioxide ($SiO_2$), silicon oxycarbide (SiOC), zirconium dioxide ($ZrO_2$), and/or titanium dioxide ($TiO_2$). Proportions of $SiO_2$, SiOC, $ZrO_2$, and/or $TiO_2$ in the first solution are controlled to result in a first refractive index. For example, the first solution may contain a first ratio of $TiO_2$ to $SiO_2$, SiOC, and/or $ZrO_2$. In one embodiment, sol-gel

precursors for $SiO_2$ may include tetramethyl orthosilicate (TMOS), methyl-tri-methoxy-silane (MTMS), and tetraethyl orthosilicate (TEOS).

The second refractive layer **608** may include a second solution. The second solution may be a sol-gel solution or a nanoparticle solution. The second solution may include $SiO_2$, SiOC, $ZrO_2$, and/or $TiO_2$. Proportions of $SiO_2$, SiOC, $ZrO_2$, and/or $TiO_2$ in the second solution are controlled to result in a second refractive index. The second refractive index may be different than the first refractive index. For example, the second solution may contain a second ratio having a higher ratio of $TiO_2$ to $SiO_2$, SiOC, and/or $ZrO_2$ than the first ratio to result in the second refractive index having a higher refractive index than the first refractive index or the second ratio may have a lower ratio of $TiO_2$ to $SiO_2$, SiOC, and/or $ZrO_2$ than the first ratio to result in the second refractive index having a lower refractive index than the first refractive index.

A first refractive layer may include a first material, and a subsequent refractive layer may include a second material different from the first material. A series of refractive layers of metals and/or dielectrics of varying dielectric constants and refractive indices, such as a graded anti-reflective coating (ARC), reduce glare, reflection, or blur. The refractive index of the encapsulation layer can be tuned from over about 2.0 to about 1.47. Exemplary ranges for the refractive index of the refractive body **600** can be between about 1.5 and about 2.0, for example about 1.75. In yet other example, the refractive index of the refractive body **600** can between about 1.0 and about 1.5, for example about 1.47. In yet another example, the refractive index of the refractive body **600** can be between about 1.0 and about 1.5, for example about 1.48 or about 1.49; or between about 1.0 and about 1.5, for example about 1.47.

Each of the first refractive layer and subsequent refractive layer(s), such as the second refractive layer, can have a refractive index of from about 1.6 to about 2.4, such as from about 1.7 to about 2.3, such as from about 1.8 to about 2.2, such as from about 1.8 to about 2, such as from about 1.9 to about 2, such as from about 1.95 to about 2. Alternatively, the overlayer **500** has a refractive index from about 2 to about 2.2, such as from about 2 to about 2.1, such as from about 2 to about 2.05, such as about 2, alternatively from about 1.8 to about 1.85. In another example, the overlayer **500** has a refractive index from about 1.85 to about 1.9, alternatively from about 1.9 to about 1.95, alternatively from about 1.95 to about 1.96, alternatively from about 1.96 to about 1.97, alternatively from about 1.97 to about 1.98. In yet another example, the overlayer **500** has a refractive index from about 1.98 to about 1.99, alternatively from about 1.99 to about 2, alternatively from about 2 to about 2.01, alternatively from about 2.01 to about 2.02, alternatively from about 2.02 to about 2.03. Another exemplary refractive index of the overlayer **500** is from about 2.03 to about 2.04, alternatively from about 2.04 to about 2.05, alternatively from about 2.05 to about 2.1, alternatively from about 2.1 to about 2.2, alternatively from about 1.95 to about 2.05.

In another example, shown in FIG. **6**B, an overlayer **500** is formed over and in contact with the refractive body **600**. The overlayer **500** can be a mask layer deposited in contact with and over the refractive body **600** using the applicator **404**. The refractive index pattern is programed into to the controller **428** in order to match the target profile. Openings **612** are made through the overlayer **500**, exposing a portion of the planar surface **601** of the refractive body **600**. As described above at Operation **216**, the overlayer **500** can be deposited by FCVD, PVD, spin coating, or deposited by ignited plasma **424** from the applicator **404** in the environment **401**. In one example, lithography is performed to transfer a pattern into the refractive body **600**. A material of the mask layer includes any hard mask material, such as photoresist, $SiO_2$, Cr.

At Operation **228**, the refractive body **600** is etched using the applicator **404**. An etch process can be performed, as described above at Operation **212** or at Operation **220**, in order to remove portions of the refractive body **600** thus forming graduated refractive gratings **616** of varying refractive indices, as shown in FIG. **6**C. Accordingly, the gratings **308** include portions of the first refractive layer **604** and the second refractive layer **608**. The second refractive layer **608** can include additional individual layers of varying refractive indices. As noted, each of the gratings **308** can have an angle **520** measured relative to the planar surface **601**. The angle **520** can be, for example, about 0 degrees to about 80 degrees, such as about 70 degrees. In another example, the angle **520** is between about 5 degrees and about 65 degrees, such as about 45 degrees, or about 55 degrees.

As shown in FIG. **6**D, a surface profile **620** having a modulating refractive index is formed in the refractive body **600**. The surface profile **620** is based upon the target profile described above. Plasma **424** is utilized to etch the surface profile **620** into the planar surface **601** of the refractive body **600**. The refractive body **600** includes the first refractive layer **604** and the second refractive layer **608**. The surface profile **620** includes a depth **512**, surface angle **516**, and the length **460** parameters. As noted above, the distance **456** from the head **408** of the applicator **404** to the substrate **100**, plasma power, and a speed of the applicator **404** relative to the length **460** of the substrate **100**, can also be adjusted to create the surface profile **620**. The surface profile **620** can include portions having linear or non-linear slopes, and can include several portions that oscillate with respect to the substrate **100**. In one example, the surface profile **620** includes a portion this is hydrophobic and another portion that is hydrophilic. In one example, the refractive body **600** is deposited at Operation **224** and an overlayer **500** is deposited at Operation **216**. The method **200** can then proceed to Operation **220** where the overlayer **500** is etched. The openings **612** are formed in the overlayer **500** through photolithography. The method then proceeds to Operation **228** where the refractive body **600** is etched. In one example, the graduated refractive gratings **616** are formed as shown in FIG. **6**C. In another example, the surface profile **620** is formed as shown in FIG. **6**D. Further still, in yet another example, the refractive body **600** is deposited with the surface profile **620**, in substantially the same manner as the refractive body **600** is deposited, as shown in FIG. **6**A, or the overlayer **500**, as shown in FIG. **5**A-B.

At Operation **232**, the method **200**, in one example, returns to Operation **212**. In one example, the gratings **308** are etched, and in another example, the graduated refractive gratings **616** are etched. The method **200** is repeated until the gratings **308** reach the target profile thus producing uniform light profile **454**. In another example, the method **200** is repeated until the target profile is achieved and uniform light profile **454** exits the graduated refractive gratings **616**. As shown in FIG. **2**, in other examples, Operation **216** or Operation **224** can proceed to Operation **232**.

In yet another example, the method **200** at Operation **232** returns directly to Operation **224**, and a subsequent layer of the second refractive layer **608** is deposited. The method **200** is repeated until the refractive body **600** has a desired refractive index. In yet another example, the method **200** at Operation **232** returns to Operation **220** where another

portion of the overlayer **500** is etched having the surface profile **508**. The method **200** is repeated until the overlayer **508** has the desired surface profile **508**. The method **200** can also be repeated until the refractive body **600** has the desired surface profile **620**, in yet another example.

FIGS. **7**A-**7**C are alternative examples of the head **408** of the applicator **404** shown in FIG. **4**. In one example, the head **408** is a nozzle **704** having an opening **716** through which the jet of the plasma **424** is expelled, as shown in FIG. **7**A. In another example, the head **408** is a quadrilateral head **708** having a rectangular opening **720**. As illustrated in FIG. **7**B, the quadrilateral head **708** has a substantially rectangular perimeter, but is not limited to this arrangement. In another example, quadrilateral head **708** is substantially square. In yet another example, shown in FIG. **7**C, the head **408** is an array **712**, the array **712** having n x m openings **716**. A 4×5 array **712** of openings **716** is shown, in a non-limiting example. The disclosure herein is not limited to that arrangement and includes arrays where a value of n is not equal to a value of m, such as a 5×4, 2×3, or 5×9 array of openings **716**. Exemplary arrays **712** also include square arrays where a value of n is equal to a value of m, such as a 3×3, 5×5, or a 10×10 array of openings **716**. Each of the nozzle **704**, the quadrilateral head **708**, and the array **712** can be utilized with the method **200** to achieve the target profile, as disclosed herein.

Disclosed herein are a method and apparatus for forming a substrate having a graduated refractive index. Advantageously, precise control of grating depth, grating refractive index, and encapsulation thickness across the waveguide are obtained. While the foregoing is directed to specific examples, other examples may be devised without departing from the basic scope thereof, and the scope thereof is determined by the claims that follow.

We claim:

**1**. A method of forming a waveguide structure, comprising:

expelling plasma from an applicator having a head toward a plurality of grating structures formed on a substrate, the plasma formed at atmospheric pressure in the head;

changing a depth of the plurality of grating structures with the plasma by removing grating material from the plurality of grating structures, and

depositing an overlayer over and in contact with the grating structures and to form a surface profile of the overlayer, the surface profile having a surface angle defining a slope with respect to the substrate.

**2**. The method of claim **1**, wherein the overlayer is deposited over and in contact with the grating structures by vaporizing a precursor with the plasma, wherein the overlayer is at least one of a photoresist layer, an encapsulating layer, or a deposition layer.

**3**. The method of claim **2**, further comprising removing a portion of the overlayer using a plasma formed at atmospheric pressure in the head of the applicator.

**4**. The method of claim **1**, wherein changing the depth of the plurality of grating structures comprises sloping the plurality of grating structures in a direction from a first end of the substrate to a second end of the substrate.

**5**. The method of claim **4**, wherein a refractive index of the waveguide structure changes linearly from the first end to the second end with respect to the depth of the plurality of grating structures.

**6**. The method of claim **4**, wherein a refractive index of the waveguide structure changes non-linearly from the first end to the second end with respect to the depth of the plurality of grating structures.

**7**. The method of claim **4**, wherein a refractive index of the waveguide structure oscillates from the first end to the second end with respect to the depth of the plurality of grating structures.

**8**. The method of claim **1**, further comprising:

creating a second surface profile by moving the head of the applicator relative to the plurality of grating structures; and

removing grating material from the plurality of grating structures, based upon data representing a target profile.

**9**. The method of claim **2**, wherein the surface profile of the overlayer is varied by varying at least one of a plasma power, a distance from the head of the applicator to a surface of the substrate, or a relative speed between the head and the surface of the substrate.

**10**. The method of claim **1**, further comprising:

creating a second surface profile by moving the head of the applicator relative to the plurality of grating structures; and

depositing material over the grating structures, based upon data representing a target profile.

**11**. A method of forming a waveguide structure, comprising:

expelling plasma from an applicator having a head toward a plurality of grating structures formed on a substrate, the plasma formed at atmospheric pressure in the head;

depositing a layer over the plurality of grating structures by vaporizing a precursor with the plasma formed in the head;

removing portions of the layer using a plasma from the applicator at atmospheric pressure to form a surface profile of the layer; and

etching the plurality of grating structures through the layer.

**12**. The method of claim **11**, wherein the surface profile of the layer is varied by varying at least one of a plasma power, a distance from the head of the applicator to a surface of the substrate, or a relative speed between the head and the surface of the substrate.

**13**. The method of claim **12**, wherein the layer is formed from the precursor selected from a group containing one or more of ($N_2$), nitrogen dioxide ($NO_2$), fluorine gas ($F_2$), oxygen gas ($O_2$), hydrogen gas ($H_2$), $H_2O$ in vapor form, carbon monoxide (CO), methane ($CH_4$), carbon dioxide ($CO_2$), argon (Ar), and helium (He).

**14**. The method of claim **11**, wherein the surface profile of the layer is varied by varying at least one of a plasma power, a distance from the head of the applicator to a surface of the substrate, or a relative speed between the head and the surface of the substrate.

**15**. A method of forming a waveguide structure, comprising:

expelling plasma from an applicator having a head toward a substrate, the plasma formed at atmospheric pressure in the head;

depositing one or more refractive layers over the substrate by vaporizing a precursor with the plasma formed in the head;

depositing an overlayer on the one or more refractive layers; and

forming a refractive grating structure by etching the one or more refractive layers through the overlayer.

**16**. The method of claim **15**, further comprising:

forming a plurality of gratings and a plurality of channels of the refractive grating structure by etching the channels in the one or more refractive layers.

17. The method of claim 15, wherein the precursor is selected from a group containing one or more of ($N_2$), nitrogen dioxide ($NO_2$), fluorine gas ($F_2$), oxygen gas ($O_2$), hydrogen gas ($H_2$), $H_2O$ in vapor form, carbon monoxide (CO), methane ($CH_4$), carbon dioxide ($CO_2$), argon (Ar), and helium (He).

18. The method of claim 16, wherein a change in depth of the plurality of gratings has a surface profile with a slope surface angle that changes linearly from a first end to a second end of the refractive grating structure.

19. The method of claim 15, further comprising:

forming a plurality of gratings and a plurality of channels of the refractive grating structure by etching the channels in the one or more refractive layers, wherein the plurality of gratings are formed at an angle between 5 degrees and 65 degrees with respect to the substrate.

20. The method of claim 9, wherein the head includes a nozzle having one or more openings.

21. The method of claim 1, wherein the surface angle includes a non-linear gradation.

22. A method of forming a waveguide structure, comprising:

expelling plasma from an applicator having a head toward a plurality of grating structures formed on a substrate, the plasma formed at atmospheric pressure in the head;

depositing a layer over the plurality of grating structures by vaporizing a precursor with the plasma formed in the head; and

removing portions of the layer using a plasma from the applicator at atmospheric pressure to form a surface profile of the layer, the surface profile having a surface angle.

23. The method of claim 22, wherein the surface profile of the layer is varied by varying at least one of a plasma power, a distance from the head of the applicator to a surface of the substrate, or a relative speed between the head and the surface of the substrate.

24. The method of claim 22, wherein the layer is formed from the precursor selected from a group containing one or more of ($N_2$), nitrogen dioxide ($NO_2$), fluorine gas ($F_2$), oxygen gas ($O_2$), hydrogen gas ($H_2$), $H_2O$ in vapor form, carbon monoxide (CO), methane ($CH_4$), carbon dioxide ($CO_2$), argon (Ar), and helium (He).

25. The method of claim 24, wherein the surface profile of the layer is varied by varying at least one of a plasma power, a distance from the head of the applicator to a surface of the substrate, or a relative speed between the head and the surface of the substrate.

* * * * *