US012110582B2

(12) **United States Patent**
Ohno et al.

(10) **Patent No.: US 12,110,582 B2**
(45) **Date of Patent: Oct. 8, 2024**

(54) **INTERFACIAL LAYER FOR OPTICAL FILM PERFORMANCE**

(71) Applicants: **Kenichi Ohno**, Sunnyvale, CA (US); **Takashi Kuratomi**, San Jose, CA (US); **Fariah Hayee**, San Jose, CA (US); **Andrew Ceballos**, Palo Alto, CA (US); **Rami Hourani**, Santa Clara, CA (US); **Ludovic Godet**, Sunnyvale, CA (US)

(72) Inventors: **Kenichi Ohno**, Sunnyvale, CA (US); **Takashi Kuratomi**, San Jose, CA (US); **Fariah Hayee**, San Jose, CA (US); **Andrew Ceballos**, Palo Alto, CA (US); **Rami Hourani**, Santa Clara, CA (US); **Ludovic Godet**, Sunnyvale, CA (US)

(73) Assignee: **APPLIED MATERIALS, INC.**, Santa Clara, CA (US)

(*) Notice: Subject to any disclaimer, the term of this patent is extended or adjusted under 35 U.S.C. 154(b) by 0 days.

(21) Appl. No.: **17/698,566**

(22) Filed: **Mar. 18, 2022**

(65) **Prior Publication Data**

US 2022/0316044 A1 Oct. 6, 2022

Related U.S. Application Data

(60) Provisional application No. 63/165,566, filed on Mar. 24, 2021.

(51) **Int. Cl.**

C23C 14/35	(2006.01)
C23C 14/08	(2006.01)
C23C 14/34	(2006.01)

(52) **U.S. Cl.**

CPC ***C23C 14/083*** (2013.01); ***C23C 14/3485*** (2013.01); ***C23C 14/35*** (2013.01)

(58) **Field of Classification Search**

CPC . C23C 14/0036; C23C 14/35; C23C 14/3485; C23C 14/083

(Continued)

(56) **References Cited**

U.S. PATENT DOCUMENTS

2003/0077914 A1* 4/2003 Le H01J 37/3408 438/763

2006/0088688 A1 4/2006 Bellman et al.

(Continued)

FOREIGN PATENT DOCUMENTS

CN 108130522 A 6/2018
CN 109085675 A 12/2018

(Continued)

OTHER PUBLICATIONS

Drogowska et al. "RBS, XRR and optical reflectivity measurements of Ti—TiO2 thin films deposited by magnetron sputtering", Materials Research Bulletin, 47 (2012), 296-301. (Year: 2012).*

(Continued)

Primary Examiner — Rodney G McDonald
(74) *Attorney, Agent, or Firm* — Patterson & Sheridan LLP

(57) **ABSTRACT**

A method of forming an optical device is provided. The method includes disposing an optical device substrate on a substrate support in a process volume of a process chamber, the optical device substrate having a first surface; and forming a first optical layer on the first surface of the optical device substrate during a first time period when the optical device substrate is on the substrate support, wherein the first optical layer comprises one or more metals in a metal-containing oxide, a metal-containing nitride, or a metal-containing oxynitride, and the first optical layer is formed without an RF-generated plasma over the optical device substrate; and forming a second optical layer with an RF-

(Continued)

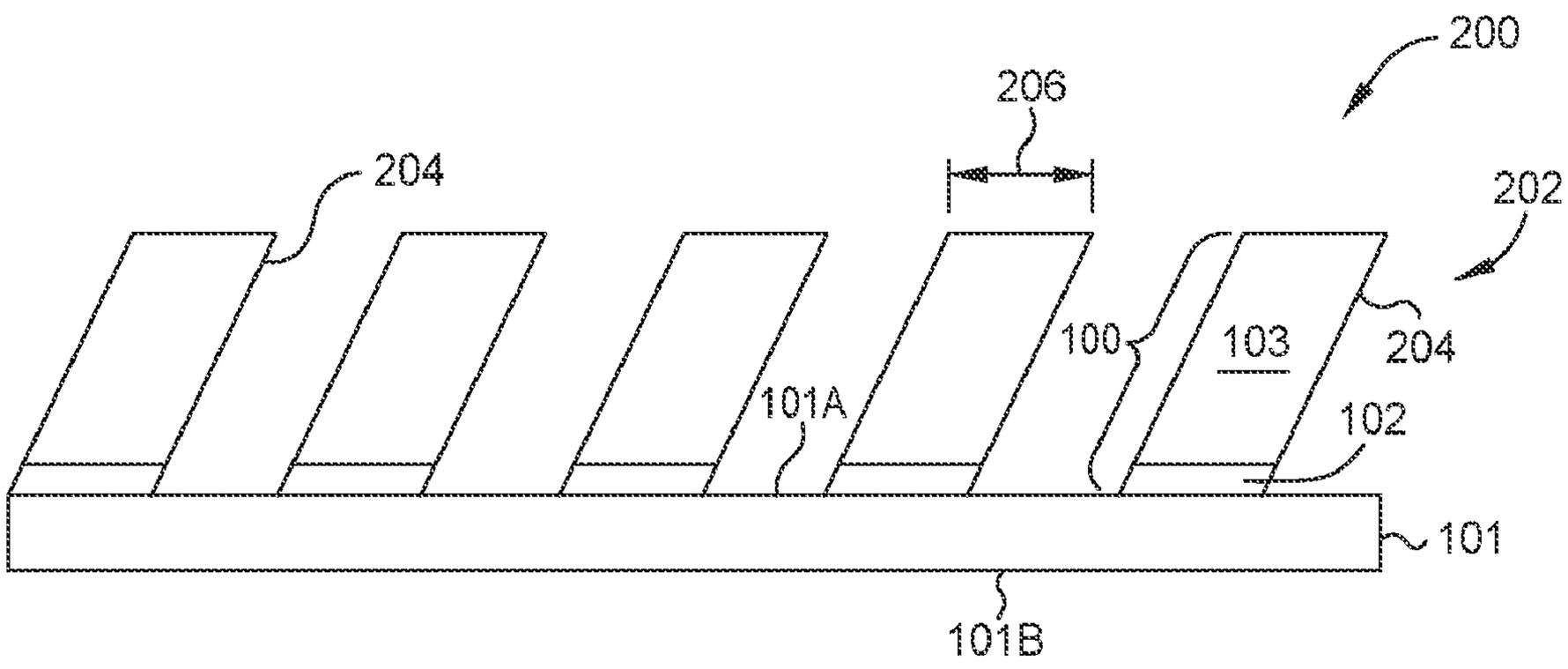

generated plasma over the first optical layer during a second time period when the optical device substrate is on the substrate support.

20 Claims, 3 Drawing Sheets

(58) **Field of Classification Search**
USPC 204/192.26–192.29, 192.15
See application file for complete search history.

(56) **References Cited**

U.S. PATENT DOCUMENTS

2007/0015304	A1	1/2007	Doan	
2010/0075176	A1 *	3/2010	Yamada	C23C 14/5806 359/359

FOREIGN PATENT DOCUMENTS

CN	109652765	A *	4/2019
CN	110364583	A	10/2019
KR	2013-0075920	*	7/2013

OTHER PUBLICATIONS

Machine Translation of CN 109652765 (Year: 2019).*
Machine Translation of KR 2013-0075920 (Year: 2013).*
International Search Report dated Jul. 8, 2022 for Application No. PCT/US2022/020871.

* cited by examiner

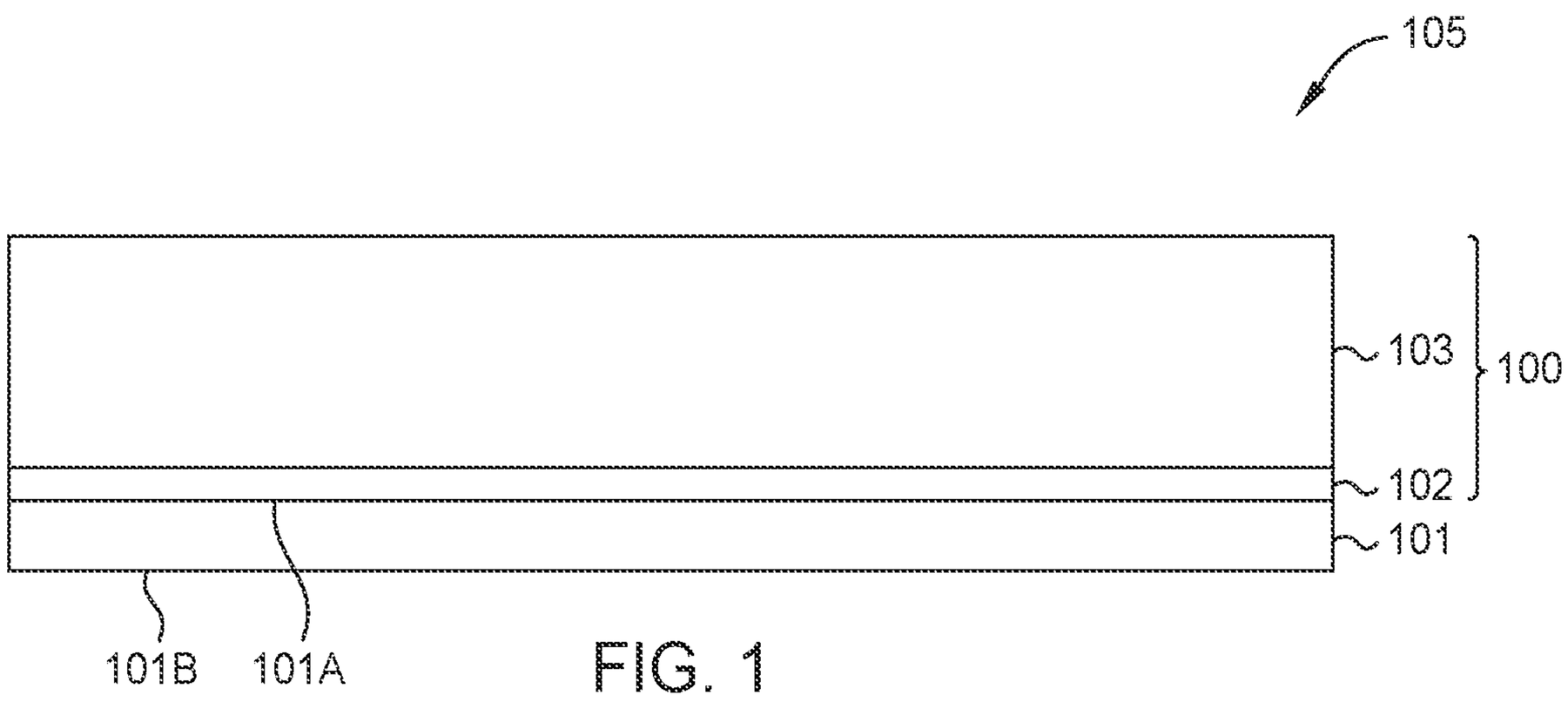
105
103
100
102
101
101B
101A

FIG. 1

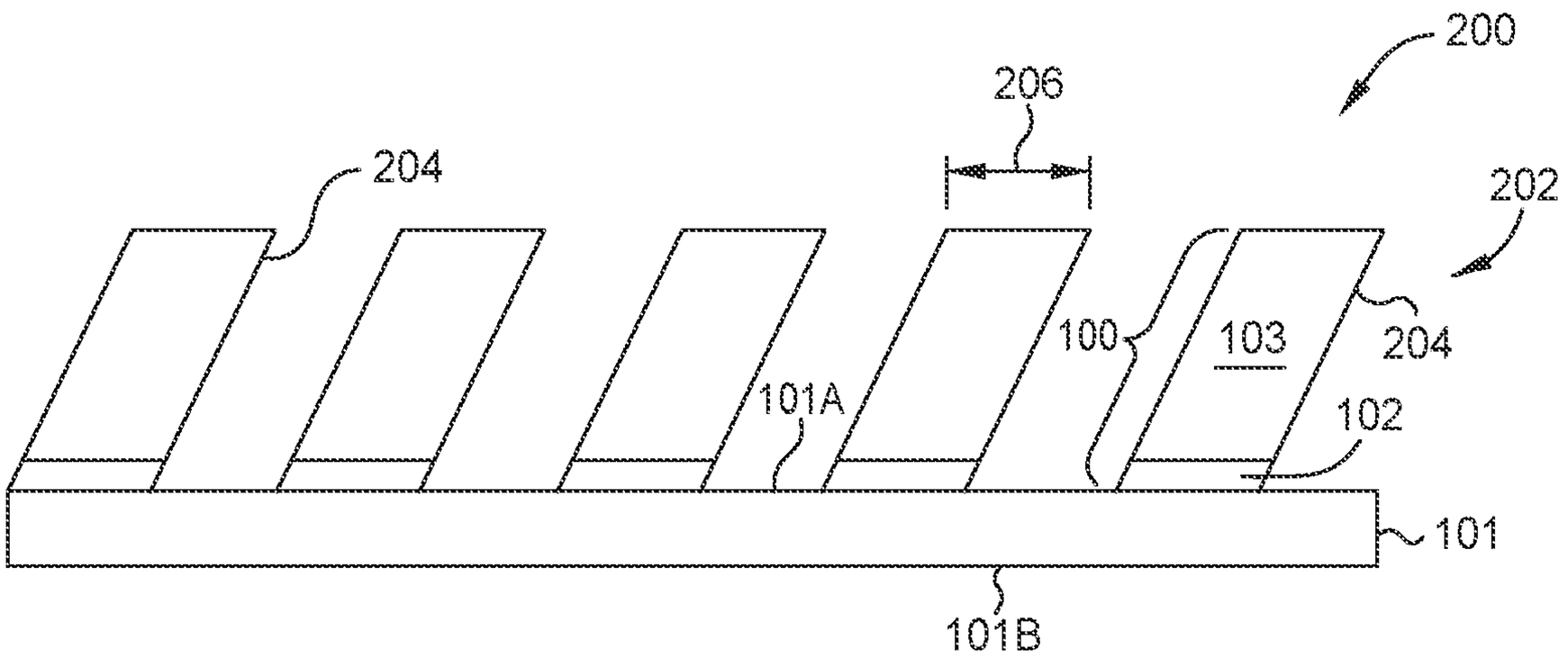
200
206
204
202
100
103
204
101A
102
101
101B

FIG. 2

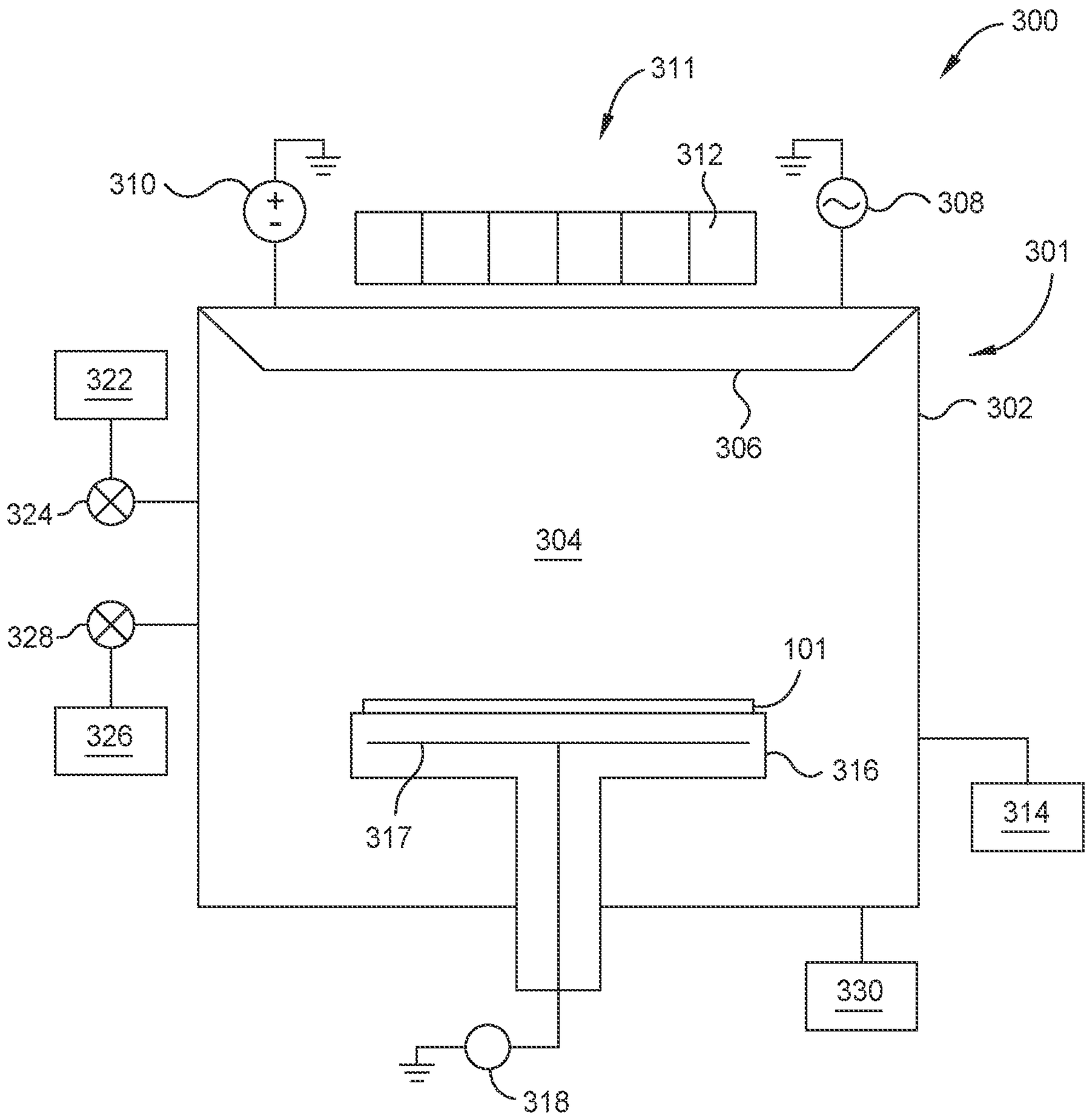
300
311
312
310
308
301
322
302
306
324
304
328
101
326
316
317
314
330
318

FIG. 3

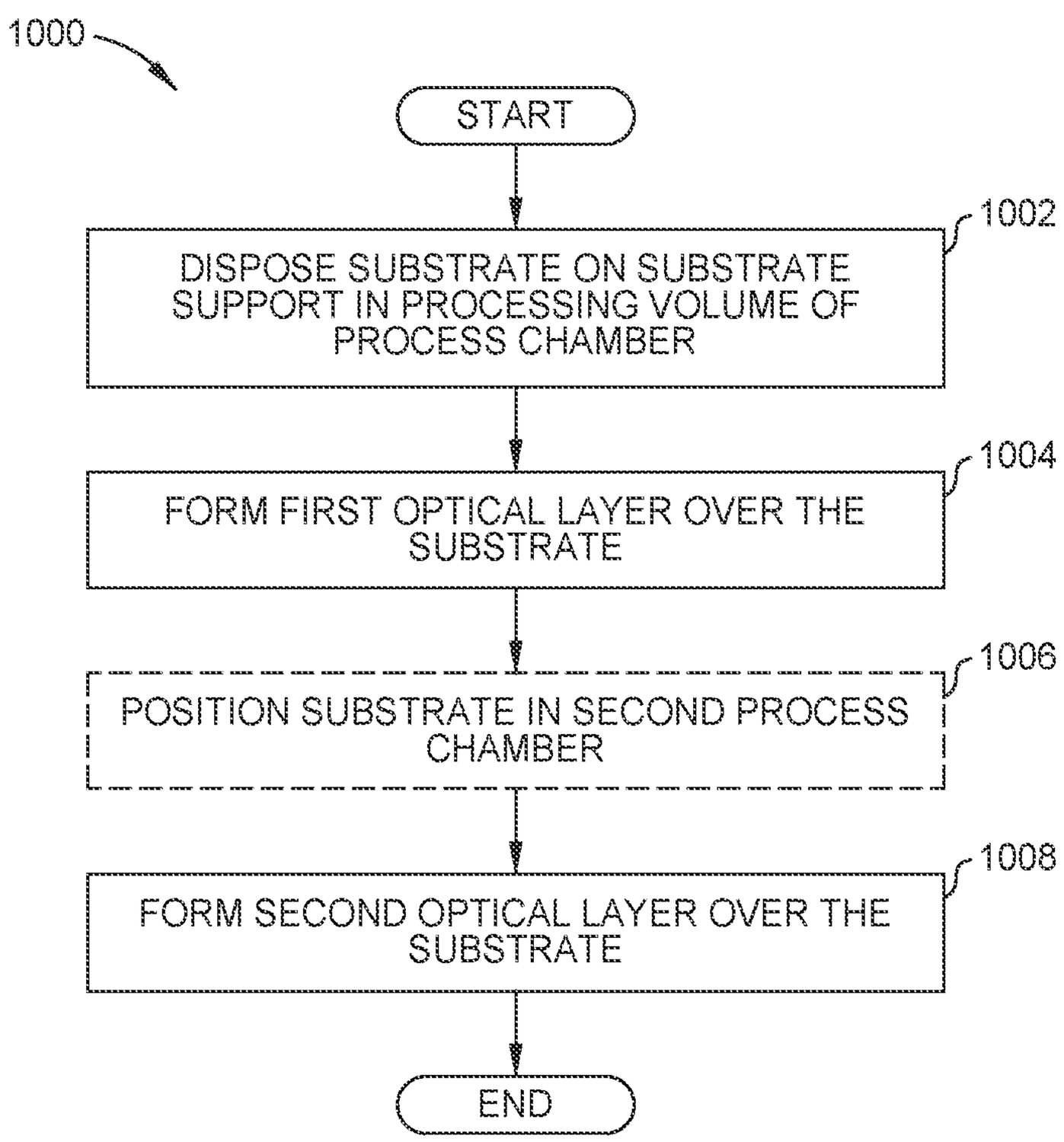
1000
START
1002
DISPOSE SUBSTRATE ON SUBSTRATE SUPPORT IN PROCESSING VOLUME OF PROCESS CHAMBER
1004
FORM FIRST OPTICAL LAYER OVER THE SUBSTRATE
1006
POSITION SUBSTRATE IN SECOND PROCESS CHAMBER
1008
FORM SECOND OPTICAL LAYER OVER THE SUBSTRATE
END

FIG. 4

INTERFACIAL LAYER FOR OPTICAL FILM PERFORMANCE

CROSS-REFERENCE TO RELATED APPLICATIONS

This application claims the benefit of U.S. Provisional Patent Application No. 63/165,566, filed on Mar. 24, 2021, the contents of which are herein incorporated by reference.

BACKGROUND

Field

Embodiments of the present disclosure generally relate to optical devices. More specifically, embodiments described herein relate to an optical device layer stack, an optical device formed from the optical device layer stack, and methods of forming an optical device layer stack.

Description of the Related Art

Virtual reality is generally considered to be a computer generated simulated environment in which a user has an apparent physical presence. A virtual reality experience can be generated in 3D and viewed with a head-mounted display (HMD), such as glasses or other wearable display devices that have near-eye display panels as lenses to display a virtual reality environment that replaces an actual environment.

Augmented reality, however, enables an experience in which a user can still see through the display lenses of the glasses or other HMD device to view the surrounding environment, yet also see images of virtual objects that are generated to appear as part of the environment. Augmented reality can include any type of input, such as audio and haptic inputs, as well as virtual images, graphics, and video that enhances or augments the environment that the user experiences. As an emerging technology, there are many challenges and design constraints with augmented reality.

One such challenge is displaying a virtual image overlaid on an ambient environment. Optical devices including waveguide combiners, such as augmented reality waveguide combiners, and flat optical devices, such as metasurfaces, are used to assist in overlaying images. Generated light is propagated through an optical device until the light exits the optical device and is overlaid on the ambient environment. Despite numerous advances in the field of optical devices and methods used to form optical devices, optical loss and light scattering inside the optical device remain a problem. Optical loss and light scattering lower the optical performance of optical devices and can ultimately give users of the optical devices (e.g., augmented reality devices) an unsatisfactory experience.

Accordingly, what is needed in the art are improved optical devices and methods to form these improved optical devices.

SUMMARY

In one embodiment, a method of forming an optical device is provided. The method includes disposing an optical device substrate on a substrate support in a process volume of a process chamber, the optical device substrate having a first surface; and forming a first optical layer on the first surface of the optical device substrate during a first time period when the optical device substrate is on the substrate support, wherein the first optical layer comprises one or more metals in a metal-containing oxide, a metal-containing nitride, or a metal-containing oxynitride, and the first optical layer is formed without an RF-generated plasma over the optical device substrate; and forming a second optical layer with an RF-generated plasma over the first optical layer during a second time period when the optical device substrate is on the substrate support, wherein the first optical layer is disposed between the optical device substrate and the second optical layer, the second optical layer is spaced apart from the optical device substrate in a first direction, the second optical layer comprises a metal-containing oxide, a metal-containing nitride, or a metal-containing oxynitride, the first optical layer has a thickness in the first direction between an atomic layer and about 10 nm, and the second optical layer has a thickness in the first direction of greater than about 20 nm.

In another embodiment, a method of forming an optical device is provided. The method includes disposing an optical device substrate on a first substrate support in a first process volume of a first process chamber, the optical device substrate having a first surface; forming a first optical layer on the first surface of the optical device substrate during a first time period when the optical device substrate is on the first substrate support in the first process volume, wherein the first optical layer comprises one or more metals in a metal-containing oxide, a metal-containing nitride, or a metal-containing oxynitride, and the first optical layer is formed without an RF-generated plasma over the optical device substrate; disposing the optical device substrate on a second substrate support in a second process volume of a second process chamber; and forming a second optical layer with an RF-generated plasma over the first optical layer during a second time period when the optical device substrate is on the second substrate support, wherein the first optical layer is disposed between the optical device substrate and the second optical layer, the second optical layer is spaced apart from the optical device substrate in a first direction, the second optical layer comprises a metal-containing oxide, a metal-containing nitride, or a metal-containing oxynitride, the first optical layer has a thickness in the first direction between an atomic layer and about 10 nm, and the second optical layer has a thickness in the first direction of greater than about 20 nm.

In yet another embodiment, a method of forming an optical device is provided. The method includes disposing an optical device substrate on a substrate support in a process volume of a process chamber, the optical device substrate having a first surface; forming a first optical layer on the first surface of the optical device substrate during a first time period when the optical device substrate is on the substrate support, wherein the first optical layer comprises one or more metals in a metal-containing oxide, a metal-containing nitride, or a metal-containing oxynitride, and the first optical layer is formed without an RF-generated plasma over the optical device substrate; and forming a second optical layer with an RF-generated plasma on the first optical layer during a second time period when the optical device substrate is on the substrate support, wherein the first optical layer is disposed between the optical device substrate and the second optical layer, the second optical layer is spaced apart from the optical device substrate in a first direction, the second optical layer comprises a metal-containing oxide, a metal-containing nitride, or a metal-containing oxynitride, the first optical layer has a thickness in the first direction between about 2 nm and about 6 nm, the second optical layer has a thickness in the first direction of

greater than about 40 nm, and the first optical layer and the second optical layer are each formed of titanium oxide.

BRIEF DESCRIPTION OF THE DRAWINGS

So that the manner in which the above recited features of the present disclosure can be understood in detail, a more particular description of the disclosure, briefly summarized above, may be had by reference to embodiments, some of which are illustrated in the appended drawings. It is to be noted, however, that the appended drawings illustrate only exemplary embodiments and are therefore not to be considered limiting of scope, as the disclosure may admit to other equally effective embodiments.

FIG. **1** is a schematic, cross-sectional view of an optical device, according to one embodiment.

FIG. **2** is a schematic, cross-sectional view of an optical device, according to one embodiment.

FIG. **3** is a schematic, cross-sectional view of a processing system, according to one embodiment.

FIG. **4** is a process flow diagram of a method of forming the optical device shown in FIG. **1**, according to one embodiment.

To facilitate understanding, identical reference numerals have been used, where possible, to designate identical elements that are common to the figures. It is contemplated that elements and features of one embodiment may be beneficially incorporated in other embodiments without further recitation.

DETAILED DESCRIPTION

Embodiments of the present disclosure generally relate to optical devices. More specifically, embodiments described herein relate to an optical device layer stack, an optical device formed from the optical device layer stack, and methods of forming an optical device layer stack.

FIG. **1** is a schematic, cross-sectional view of an optical device **105**, according to one embodiment. The optical device **105** includes an optical device layer stack **100** formed over an optical device substrate **101**. The optical device substrate **101** includes a first surface **101**A and an opposing second surface **101**B. The optical device layer stack **100** is disposed on the first surface **101**A of the optical device substrate **101**.

The substrate **101** is any suitable optical device substrate. The substrate **101** include from any suitable material, provided that the substrate **101** can adequately transmit light of a specified wavelength or wavelength range and can serve as an adequate support for one or more optical devices formed on the substrate **101**. The substrate **101** can be formed of materials including, but not limited to, silicon, silicon oxide, silicon carbide, silica (e.g., fused silica), sapphire, glass, magnesium oxide, diamond, lanthanum oxide, or combinations thereof.

The optical device layer stack **100** includes an interface optical layer **102** (first optical layer) disposed on the substrate **101** and an optical device layer **103** (second optical layer) disposed on the interface optical layer **102**. As described in fuller detail below, the interface optical layer **102** is generally formed using milder process conditions compared to the process conditions used to form the optical device layer **103**. These milder process conditions can reduce damage to the substrate **101** and improve the optical properties of the optical device **105** compared to similar optical devices formed without the interface optical layer **102**.

The interface optical layer **102** includes an oxide, a nitride, or an oxy-nitride of one or more of titanium (Ti), niobium (Nb), silicon (Si), tantalum (Ta), aluminum (Al), chromium (Cr), ruthenium (Ru), hafnium (Hf), magnesium (Mg), zirconium (Zr), vanadium (V), molybdenum (Mo), tungsten (W), manganese (Mn), iron (Fe), cobalt (Co), nickel (Ni), copper (Cu), zinc (Zn), gallium (Ga), tin (Sn), bismuth (Bi), antimony (Sb), gadolinium (Gd), yttrium (Y), or combinations thereof. In some embodiments, the interface optical layer **102** can consist of a single material (e.g., TiO).

The optical device layer **103** includes an oxide, a nitride, or an oxy-nitride of one or more of Ti, Nb, Si, Ta, Al, Cr, Ru, Hf, Mg, Zr, V, Mo, W, Mn, Fe, Co, Ni, Cu, Zn, Ga, Sn, Bi, Sb, Gd, Y, or combinations thereof. In some embodiments, the optical device layer **103** can consist of a single material (e.g., TiO). In one embodiment, the interface optical layer **102** layer and the optical device layer **103** have the same composition. In another embodiment, the interface optical layer **102** layer and the optical device layer **103** have different compositions.

The interface optical layer **102** has a thickness from about an atomic layer (e.g., an atomic layer of TiO) to about 100 nanometers (nm), such as from about 1 nm to about 20 nm, such as about 2 nm to about 6 nm. The optical device layer **103** has a thickness of about 1 nm to about 1000 nm, such as greater than about 20 nm, such as greater than about 40 nm, such as from about 20 to about 200 nm. Although not required, the optical device layer **103** is generally substantially thicker (i.e., in the direction that the optical device layer **103** is spaced apart from the substrate **101**) than the interface optical layer **102**. For example, in some embodiments, the thickness of the optical device layer **103** is at least two times greater, five times greater, or ten times greater than the thickness of the interface optical layer **102**.

The interface optical layer **102** can reduce damage (e.g., plasma damage) to the substrate **101** during deposition of the optical device layer **103**. For example, bombardment during physical vapor deposition (PVD) of the optical device layer **103** can damage a substrate **101** resulting in reduced optical device performance, such as higher amounts of optical loss compared to a substrate having less damage. The interface optical layer **102** reduces this damage. Furthermore, the interface optical layer **102** can be optically matched to the substrate **101** and the optical device layer **103** to reduce scattering loss.

FIG. **2** is a schematic, cross-sectional view of an optical device **200**, according to one embodiment. The optical device **200** is formed from the optical device layer stack **100**. In one embodiment, which can be combined with other embodiments described herein, the optical device **200** is a waveguide combiner, such as an augmented reality waveguide combiner. In another embodiment, which can be combined with other embodiments described herein, the optical device **200** is a flat optical device, such as a metasurface.

The optical device **200** includes optical device structures **202** disposed on the substrate **101**. The optical device structures **202** include sub-micron critical dimensions, e.g., nanosized dimensions, corresponding to the widths **206** of the optical device structures **202**. In some embodiments, the optical device structures **202** may be binary structures (not shown) with sidewalls **204** perpendicular to the first surface **101**A of the substrate **101**. In other embodiments, for example as shown in FIG. **2**, the optical device structures **202** may be angled structures with at least one of the sidewalls **204** angled (e.g., non-perpendicular) relative the substrate **101**. The optical device structures **202** can be

formed from the optical device layer stack **100** via one or more lithography and/or etch processes.

FIG. **3** is a schematic, cross-sectional view of a process system **300**, according to one embodiment. The processing system **300** includes a process chamber **301**. The process system **300** may be used to perform the methods described herein. The process chamber **301** is a physical vapor deposition (PVD) chamber. It is to be understood that the process chamber **301** is an exemplary PVD chamber and other PVD chambers, including PVD chambers from other manufacturers, may be used with or modified to perform the methods of the present disclosure. In some embodiments, a cluster tool (not shown) having at least two process chambers **301** along with the other equipment shown in FIG. **3**A may be used to perform the methods described herein. In one embodiment, the cluster tool for performing the methods of forming the optical device layer stack **100** may include a first configuration of the chamber **301** configured for pulsed direct current (DC) PVD and a second configuration of the chamber **301** configured for at least one of radio frequency (RF), DC, or pulsed DC PVD.

The chamber **301** includes a chamber body **302** defining a processing volume **304**. The chamber **301** further includes a target **306** disposed in the processing volume **304**. The target **306** may be a metal target or a metal-containing target. Examples of a metal target that can be used as the target **306** include one or more of Ti, Nb, Si, Ta, Al, Cr, Ru, Hf, Mg, Zr, V, Mo, W, Mn, Fe, Co, Ni, Cu, Zn, Ga, Sn, Bi, Sb, Gd, Y, or combinations thereof. Examples of a metal-containing target that can be used as the target **306** include an oxide, a nitride, or an oxy-nitride of one or more of Ti, Nb, Si, Ta, Al, Cr, Ru, Hf, Mg, Zr, V, Mo, W, Mn, Fe, Co, Ni, Cu, Zn, Ga, Sn, Bi, Sb, Gd, Y, or combinations thereof. Similarly, oxides, nitrides, or oxy-nitrides of the above metal targets may be formed through reactive sputtering.

The process system **300** can further include an RF power supply **308** and a DC power supply **310**. The target **306** can be coupled to the RF power supply **308** and the DC power supply **310**. A first configuration of the chamber **301** may include a DC power supply **310**. A second configuration of the chamber **301** may include the DC power supply **310** and/or the RF power supply **308**. These different configurations can be used independently or when multiple process chambers are used, for example in a cluster tool.

During processing, power can be provided to the target **306**. In some embodiments, this power can be used to ignite a plasma composed of one or more of a sputter gas (e.g., argon (Ar)) and a reactive gas, (e.g., an oxygen-containing gas or a nitrogen-containing gas) in the processing volume **304**. In some embodiments, the plasma is a capacitively coupled plasma.

The chamber **301** may include a magnetron assembly **311**. The magnetron assembly **311** can include a plurality of magnets **312** or electrical coils arranged to provide a magnetic field which extends through the target **306** and into the processing volume **304**. The generated magnetic field can increase the plasma density near the target **306** by enabling additional electron-gas atom collisions.

The process system **300** can further include a vacuum source **314**. The processing volume **304** is fluidly coupled to a vacuum source **314**, such as a vacuum pump to maintain the processing volume **304** at a process pressure and evacuate the sputter gas, reactive gas, and other gases.

The chamber **301** further includes a substrate support **316** disposed in the processing volume **304**. The substrate support **316** can include an electrode **317**. In some embodiments, the substrate support **316** can be operable to secure (e.g., chuck) the substrate **101** to the support substrate support **316**. In some embodiments, the processing system **300** further includes a power source **318**. The power source **318** can be coupled to the electrode **317** in the substrate support **316** in order to induce an electrical bias on the substrate **101**. The power source **318** may be an RF or DC power source. In other embodiments, a self-bias may form on the substrate **101** during processing.

The process system **300** can further include a sputter gas source **322** and a reactive gas source **326**. A sputter gas flow controller **324**, such as a mass flow controller (MFC), can be disposed between the sputter gas source **322** and the process volume **304** to control a flow of the sputter gas (e.g., argon) from the sputter gas source **322** to the processing volume **304**. A reactive gas flow controller **328**, such as an MFC, can be disposed between a reactive gas source **326** and the process volume **304** to control a flow of the reactive gas (e.g., oxygen and/or nitrogen) from the reactive gas source **326** to the processing volume **304**. A controller **330** is coupled to the chamber **301** and configured to control aspects of the process system **300** during processing, such as during the methods of forming the optical device layer stack **100**.

FIG. **4** is a process flow diagram of a method **1000** of forming the optical device **105** shown in FIG. **1**, according to one embodiment. The method **1000** can be performed using the processing system **300** described above in reference to FIG. **3**.

The method **1000** begins at block **1002**. At block **1002**, the optical device substrate **101** is positioned on the substrate support **316** in the process chamber **301**.

At block **1004**, the interface optical layer **102** (first optical layer) is formed over the substrate **101**, such as directly on the first surface **101**A of the substrate **101**, during a first time period, for example using a PVD process. The interface optical layer **102** can be formed in a variety of ways using conditions that are milder than the conditions used to form the optical device layer **103**. Due to the relative differences between forming the layers **102**, **103**, these differences are discussed in further detail below after providing a description of an exemplary process to form the optical device layer **103**.

At block **1006**, the optical device substrate **101** is optionally positioned on a second substrate support **316** in a second process volume **304** in a second process chamber **301** (not shown), for example in a cluster tool (not shown) that includes at least two process chambers **301**. In some embodiments, the substrate **101** can remain on the substrate support **316** in the process chamber **301** shown in FIG. **3**.

At block **1008**, the optical device layer **103** (second optical layer) is formed over the interface optical layer **102** during a second time period, for example using a PVD process. The second time period can begin after the first time period (i.e., the time period when the interface optical layer **102** was formed) ends. The optical device layer **103** is generally formed by physical vapor deposition in which the target **306** is sputtered by a sputter gas (e.g., argon) provided from the sputter gas source **322**. When a metal material (i.e., a material not including oxygen and/or nitrogen) is used as the target **306**, then one or more reactive gases (e.g., oxygen and/or nitrogen) can be provided from reactive gas source **326** to the process volume **304** during block **1008**. In other embodiments, the target **306** can include oxygen and/or nitrogen and in such embodiments, oxygen and/or nitrogen may not be provided to the process volume **304**.

Although not required, the optical device layer **103** is generally formed by generating a RF plasma in the process

volume **304**. For example, RF power can be provided from the RF power supply **308** to the target **306**. The RF power at the target **306** can be coupled (e.g., capacitively or inductively coupled depending on the process chamber being used) through to the substrate support **316** which can be grounded. In some embodiments, a DC bias can be applied to the electrode **317** in the substrate support **316**. As mentioned above using an RF plasma to deposit an optical layer, such as the optical device layer **103** can often damage a substrate when the optical layer is deposited directly on the substrate. However, here the interface optical layer **102** is deposited on the first surface **101**A of the optical device substrate **101**, so that the optical device layer **103** is deposited on the interface optical layer **102**.

As mentioned above, the interface optical layer **102** is generally formed using milder process conditions compared to the process conditions used to form the optical device layer **103**. These milder process conditions can reduce damage to the substrate **101** and improve the optical properties of the optical device **105** compared to similar optical devices formed without the interface optical layer **102**. The following provides some examples of milder process conditions that can be used to form the interface optical layer **102** when compared to the conditions used to perform the optical device layer **103**.

In a first example of milder process conditions, the interface optical layer **102** can be formed at a substantially lower temperature than a temperature at which the optical device layer **103** is formed. For example, in one embodiment, the interface optical layer **102** can be formed at a temperature less than 50° C. (e.g., room temperature) and the optical device layer **103** can be formed at a temperature greater than 300° C., such as 425° C. These temperatures can refer to a temperature of the substrate **101** on which the corresponding layer **102**, **103** is being formed during the respective time periods.

In another example of milder process conditions, the interface optical layer **102** can be formed by applying an RF power to the target **306** at a lower power during the first time period compared to a corresponding RF power applied to the target **306** having a higher power during the second time period. For example, in some embodiments, the RF power during the first time period of block **1004** is at least 25% lower, 50% lower, or 75% lower than the RF power applied during the second time period of block **1008**.

In another example of milder process conditions, the interface optical layer **102** can be formed by applying a pulsed DC voltage between the target **306** and the substrate support **316** during the first time period compared to a corresponding RF power applied to the target **306** during the second time period. The DC power can be pulsed during the first time period at frequency from about 25 kHz to about 600 kHz, such as from about 50 kHz to about 300 kHz. The duty cycle of the pulse signal can be from about 0.5% to about 80%, such as from about 1% to about 40%. In some embodiments, the pulsing of the DC voltage can be at a frequency that is lower than radio frequencies. A pulsed DC voltage can often cause less damage to a substrate surface than a corresponding RF voltage.

In another example of milder process conditions, the interface optical layer **102** can be formed by applying a lower DC bias to the electrode **317** in the substrate support **316** during the first time period relative to the DC bias applied to the electrode **317** in the substrate support **316** during the second time period to form the optical device layer **103**. For example, in some embodiments, the DC bias (e.g., the DC bias voltage) can be lower by at least 10 percent, such as by at least 30 percent, such as by at least 60 percent, such as by at least 90 percent relative to the DC bias applied to the electrode **317** during the second time period. The lower DC bias can slow the attraction of particles (e.g., ions and radicals) in the plasma towards the substrate **101** resulting in less damage to the substrate **101** relative to when a higher bias voltage is applied.

In another example of milder process conditions, the interface optical layer **102** can be formed by depositing the interface optical layer in different stages. For example, in one embodiment, a metal film (e.g., metal only film) can be formed during a first portion of the first time period without oxygen and/or nitrogen being provided from the reactive gas source **326** or the target **306**, and then at a later time during a second portion of the first time period one or more reactant gases (e.g., oxygen and/or nitrogen) can be provided to the process volume, so that the metal film can be transformed into a metal-containing oxide, nitride, or oxynitride. By forming a metal-only film first, there can be less interaction between the substrate material and the oxygen/or nitrogen. For example, a substrate containing silicon can interact with oxygen provided to the process volume. This interaction can result in silicon atoms ending up in the interface optical layer **102** adjacent the substrate, which leads to a less uniform interface optical layer **102**. This reduced uniformity can contribute to optical loss. Therefore, by forming a metal-only film first before providing the reactant gas to the process volume, interaction between the reactant gas (e.g., oxygen and/or nitrogen) and the substrate can be reduced, and a more uniform interface optical layer **102** can be formed.

A metal film without oxygen or nitrogen in the film can be formed according to a variety of methods including a PVD process, an electron beam deposition, a thermal deposition, an atomic layer deposition (ALD), or another process. Depending on the gases provided to the process volume, a metal film formed by ALD may coincidentally include oxygen or nitrogen before the metal film is transformed into a metal-containing oxide, nitride, or oxynitride. For example, the metal may be bonded to a volatile compound that includes oxygen and/or nitrogen, and this compound can be removed when oxygen and/or nitrogen is provided to the process volume **304** during the second portion of the first time period.

Forming the interface optical layer **102** in stages as described in this paragraph may also include repeating one or more portions of the process. For example, an ALD process may be repeated numerous times until a specified thickness is achieved. Furthermore, in one embodiment, a metal film (e.g., a titanium film) is formed during the first time period at block **1004** and then is subsequently transformed into an oxide, nitride, or oxynitride when the optical device layer **103** is being formed. For example, in such embodiments, the interface optical layer **102** may be thin enough that the oxygen and/or nitrogen provided to form the optical device layer **103** may be enough to transform the interface optical layer **102** into an oxide and/or nitride.

In another example of milder process conditions, the interface optical layer **102** can be formed by using different gas flows and/or targets than the gas flows and/or targets used during the second time period to form the optical device layer **103**. For example, in some embodiments, a first material (e.g., SiN) used as the interface optical layer **102** may result in less damage to a given substrate than if the material (e.g., TiO) used as the optical device layer **103** were deposited directly on the substrate. In another example, flowrates of one or more gases (e.g., sputter and/or reactant

gases) provided to the process volume can be reduced, which can result in less damage to the substrate **101**. For example, in one embodiment, an interface optical layer **102** of titanium oxide can be formed using flowrates of 5 sccm of argon and 120 sccm of oxygen while an optical device layer **103** of titanium oxide can be formed using flowrates of 5 sccm of argon and 8 sccm of oxygen. Thus, having the sputter gas (e.g., argon) be a lower proportion of the gas provided to the process volume **304** can be one method of forming an optical layer under milder conditions that damages the substrate less than when compared to when the sputter gas is a higher proportion of the gas provided to the process volume **304**.

The examples above are not an exhaustive list of methods of achieving milder process conditions for forming the interface optical layer **102**. Furthermore, many of examples of milder process conditions noted above can be combined to potentially further reduce damage to the substrate **101** when interface optical layer **102** is formed on the substrate **101** compared to if the optical device layer **103** were formed directly on the substrate **101**. For example, in one embodiment, the interface optical layer **102** can be formed using a pulsed DC voltage that is also at a lower power than the corresponding RF voltage used to form the optical device layer **103**. In another embodiment, the interface optical layer **102** can be formed using a lower DC bias applied to the electrode **317** in the substrate support **316** and at a lower substrate temperature compared to when the optical device layer **103** is formed.

Although the optical device layer **103** is generally described as being formed by applying an RF voltage to the target **306**, this is not required. For example, in some embodiments, the optical device layer **103** can be formed without an RF voltage being applied to the target **306** (e.g., using a pulsed DC signal instead or no voltage). However, even when an RF voltage is not applied to the target **306** when the optical device layer **103** is formed, the process conditions used to form the interface optical layer **102** are still milder in at least one of the ways described above (e.g., lower temperature, DC bias etc.), so that less damage is caused to the substrate **101** when the interface optical layer **102** is formed on the substrate **101** compared to if the optical device layer **103** were formed directly on the substrate **101** without the interface layer **102**.

In another method, multiple interface optical layers **102** may be formed over the substrate **101**. Each interface optical layer **102** of these multiple interface optical layers can have a thickness similar to the thickness described above for the interface optical layer **102**, such as from about 2 nm and about 6 nm. For example, in one embodiment, a first interface optical layer of: silicon nitride may be formed directly on the substrate **101**, then a second interface optical layer of titanium oxide can be formed on the first interface optical layer, and then a layer of titanium oxide can be formed as the optical device layer **103** directly on the second interface optical layer. In this example, the first interface layer of silicon nitride may be better matched to the substrate **101** (e.g., better optically matched for refractive index or other properties), and the second interface layer formed of titanium oxide can be better matched (e.g., better optically matched for refractive index or other properties) to the optical device layer **103** formed of titanium oxide. These two interface optical layers can allow for a smoother transition for light passing through the substrate **101**, two interface layers, and the optical device layer **103** compared to some embodiments that only include one interface optical layer **102**. Additionally or alternatively, each of the multiple interface optical layers **102** may have the same or similar composition, but be formed at different process conditions, such as increasing RF power. In yet another embodiment, which may be combined with other embodiments herein, one or more interface optical layers **102** may include ramped process conditions, such that the process condition changes (e.g., increases) as the thickness of the interface optical layer **102** increases.

Notably, the method **1000** described above can provide substantial benefits even when the same material (e.g., TiO) is used as the interface optical layer **102** and the optical device layer **103**, such that the optical device layer stack **100** consists of a single material. Optical loss can be reduced by a substantial amount (e.g., 50% or more) when an optical device is formed using the interface optical layer **102** compared to the same optical device formed without the interface optical layer **102**. Overall, by forming an interface optical layer **102** over the substrate **101** using one or more of the milder process conditions described above damage to the substrate **101** can be reduced when compared to an optical device having the optical device layer **103** formed directly on the substrate **101**. By avoiding this damage, the optical devices formed using the methods described herein can provide higher level of optical performance with less optical loss and light scattering.

While the foregoing is directed to examples of the present disclosure, other and further examples of the disclosure may be devised without departing from the basic scope thereof, and the scope thereof is determined by the claims that follow.

What is claimed is:

1. A method of forming an optical device, the method comprising:

disposing an optical device substrate on a substrate support in a process volume of a process chamber, the optical device substrate having a first surface;

forming a first optical layer on the first surface of the optical device substrate during a first time period when the optical device substrate is on the substrate support, wherein

the first optical layer comprises a metal-containing oxide, a metal-containing nitride, or a metal-containing oxynitride, and

the first optical layer is formed without an RF-generated plasma over the optical device substrate;

forming a second optical layer with an RF-generated plasma on and in contact with the first optical layer during a second time period when the optical device substrate is on the substrate support, wherein

the first optical layer is disposed between the optical device substrate and the second optical layer,

the second optical layer is spaced apart from the optical device substrate in a first direction,

the second optical layer comprises a metal-containing oxide, a metal-containing nitride, or a metal-containing oxynitride,

the first optical layer and the second optical layer consist of a single metal and one or more of oxygen and nitrogen,

the single metal is selected from the group consisting of titanium (Ti), niobium (Nb), silicon (Si), tantalum (Ta), aluminum (Al), chromium (Cr), ruthenium (Ru), hafnium (Hf), magnesium (Mg), zirconium (Zr), molybdenum (Mo), tungsten (W), manganese (Mn), iron (Fe), cobalt (Co), nickel (Ni), copper (Cu), zinc (Zn), gallium (Ga), tin (Sn), bismuth (Bi), antimony (Sb), gadolinium (Gd), and yttrium (Y),

the first optical layer has a thickness in the first direction between an atomic layer and about 10 nm, and

the second optical layer has a thickness in the first direction of greater than about 20 nm; and

forming a plurality of optical device structures over the substrate, the plurality of optical device structures spaced apart from each other in a second direction that is perpendicular to the first direction, wherein each optical device structure includes a portion of the first optical layer and a portion of the second optical layer.

2. The method of claim **1**, wherein the first optical layer and the second optical layer comprise a same material.

3. The method of claim **2**, wherein the first optical layer and the second optical layer are each formed of titanium oxide.

4. The method of claim **1**, wherein the thickness of the second optical layer in the first direction is at least ten times greater than the thickness of the first optical layer in the first direction.

5. The method of claim **1**, wherein a temperature of the substrate during the first time period is less than 50° C. and the temperature of the substrate during the second time period is greater than 300° C.

6. The method of claim **1**, wherein

a target containing a metal in the first optical layer is positioned in the process volume,

a pulsed direct current voltage is applied between the target and the substrate support during the first time period, and

the pulsed direct current voltage is pulsed during the first time period at frequency from about 50 kHz to about 300 KHz.

7. The method of claim **1**, wherein the first optical layer and the second optical layer consist of a single material that is the same material in both the first optical layer and the second optical layer.

8. The method of claim **1**, wherein forming the first optical layer comprises:

depositing a metal-containing film in an absence of oxygen and nitrogen during a first portion of the first time period, and

providing one or more of oxygen and nitrogen to the process volume during a second portion of the first time period, wherein the second portion of the first time period occurs after the first portion of the first time period.

9. The method of claim **1**, wherein each optical device structure of the plurality of optical device structures has a sub-micron width in the second direction.

10. A method of forming an optical device, the method comprising:

disposing an optical device substrate on a first substrate support in a first process volume of a first process chamber, the optical device substrate having a first surface;

forming a first optical layer on the first surface of the optical device substrate during a first time period when the optical device substrate is on the first substrate support in the first process volume, wherein

the first optical layer comprises a metal-containing oxide, a metal-containing nitride, or a metal-containing oxynitride, and

the first optical layer is formed without an RF-generated plasma over the optical device substrate;

disposing the optical device substrate on a second substrate support in a second process volume of a second process chamber; and

forming a second optical layer with an RF-generated plasma on an in contact with the first optical layer during a second time period when the optical device substrate is on the second substrate support, wherein

the first optical layer is disposed between the optical device substrate and the second optical layer,

the second optical layer is spaced apart from the optical device substrate in a first direction,

the second optical layer comprises a metal-containing oxide, a metal-containing nitride, or a metal-containing oxynitride,

the first optical layer and the second optical layer consist of a single metal and one or more of oxygen and nitrogen,

the single metal is selected from the group consisting of titanium (Ti), niobium (Nb), silicon (Si), tantalum (Ta), aluminum (Al), chromium (Cr), ruthenium (Ru), hafnium (Hf), magnesium (Mg), zirconium (Zr), molybdenum (Mo), tungsten (W), manganese (Mn), iron (Fe), cobalt (Co), nickel (Ni), copper (Cu), zinc (Zn), gallium (Ga), tin (Sn), bismuth (Bi), antimony (Sb), gadolinium (Gd), and yttrium (Y),

the first optical layer has a thickness in the first direction between an atomic layer and about 10 nm, and

the second optical layer has a thickness in the first direction of greater than about 20 nm; and

forming a plurality of optical device structures over the substrate, the plurality of optical device structures spaced apart from each other in a second direction that is perpendicular to the first direction, wherein each optical device structure includes a portion of the first optical layer and a portion of the second optical layer.

11. The method of claim **10**, wherein the first optical layer and the second optical layer comprise a same material.

12. The method of claim **11**, wherein the first optical layer and the second optical layer are each formed of titanium oxide.

13. The method of claim **10**, wherein

the thickness of the second optical layer in the first direction is at least ten times greater than the thickness of the first optical layer in the first direction, and

the thickness of the first optical layer is from about 2 nm to about 6 nm.

14. The method of claim **10**, wherein a temperature of the substrate during the first time period is less than 50° C. and the temperature of the substrate during the second time period is greater than 300°C.

15. The method of claim **10**, wherein

a target containing a metal in the first optical layer is positioned in the first process volume,

a direct current voltage is applied between the target and the first substrate support during the first time period, and

the direct current voltage is pulsed on and off during the first time period at frequency from 50 kHz to about 300 KHz.

16. The method of claim **10**, wherein the first optical layer and the second optical layer consist of a single material that is the same material in both the first optical layer and the second optical layer.

17. The method of claim **10**, wherein forming the first optical layer comprises:

depositing a metal-containing film in an absence of oxygen and nitrogen during a first portion of the first time period, and

providing one or more of oxygen and nitrogen to the first process volume during a second portion of the first time

period, wherein the second portion of the first time period occurs after the first portion of the first time period.

18. The method of claim **10**, wherein each optical device structure of the plurality of optical device structures has a sub-micron width in the second direction.

19. A method of forming an optical device, the method comprising:

disposing an optical device substrate on a substrate support in a process volume of a process chamber, the optical device substrate having a first surface;

forming a first optical layer on the first surface of the optical device substrate during a first time period when the optical device substrate is on the substrate support, wherein

the first optical layer comprises a metal-containing oxide, a metal-containing nitride, or a metal-containing oxynitride, and

the first optical layer is formed without an RF-generated plasma over the optical device substrate;

forming a second optical layer with an RF-generated plasma on and in contact with the first optical layer during a second time period when the optical device substrate is on the substrate support, wherein

the first optical layer is disposed between the optical device substrate and the second optical layer,

the second optical layer is spaced apart from the optical device substrate in a first direction,

the second optical layer comprises a metal-containing oxide, a metal-containing nitride, or a metal-containing oxynitride,

the first optical layer and the second optical layer consist of a single metal and one or more of oxygen and nitrogen,

the single metal is selected from the group consisting of titanium (Ti), niobium (Nb), silicon (Si), tantalum (Ta), aluminum (AI), chromium (Cr), ruthenium (Ru), hafnium (Hf), magnesium (Mg), zirconium (Zr), molybdenum (Mo), tungsten (W), manganese (Mn), iron (Fe), cobalt (Co), nickel (Ni), copper (Cu), zinc (Zn), gallium (Ga), tin (Sn), bismuth (Bi), antimony (Sb), gadolinium (Gd), and yttrium (Y),

the first optical layer has a thickness in the first direction between about 2 nm and about 6 nm,

the second optical layer has a thickness in the first direction of greater than about 40 nm, and

the first optical layer and the second optical layer are each formed of titanium oxide; and

forming a plurality of optical device structures over the substrate, the plurality of optical device structures spaced apart from each other in a second direction that is perpendicular to the first direction, wherein each optical device structure includes a portion of the first optical layer and a portion of the second optical layer.

20. The method of claim **19**, wherein each optical device structure of the plurality of optical device structures has a sub-micron width in the second direction.

* * * * *