US012121925B2

(12) **United States Patent**
Wang et al.

(10) **Patent No.: US 12,121,925 B2**
(45) **Date of Patent: Oct. 22, 2024**

(54) **EDGE BLACKENING FOR OPTICAL DEVICES**

(71) Applicant: **Applied Materials, Inc.**, Santa Clara, CA (US)

(72) Inventors: **Kangkang Wang**, San Jose, CA (US); **Yaseer Arafath Ahamed**, Austin, TX (US); **Yige Gao**, Santa Clara, CA (US); **Benjamin B. Riordon**, Newburyport, MA (US); **Rami Hourani**, Santa Clara, CA (US); **James D. Strassner**, Austin, TX (US); **Ludovic Godet**, Sunnyvale, CA (US); **Thinh Nguyen**, San Jose, CA (US)

(73) Assignee: **APPLIED MATERIALS, INC.**, Santa Clara, CA (US)

(*) Notice: Subject to any disclaimer, the term of this patent is extended or adjusted under 35 U.S.C. 154(b) by 0 days.

(21) Appl. No.: **18/506,799**

(22) Filed: **Nov. 10, 2023**

(65) **Prior Publication Data**

US 2024/0075492 A1 Mar. 7, 2024

Related U.S. Application Data

(62) Division of application No. 17/456,410, filed on Nov. 24, 2021, now Pat. No. 11,850,621.
(Continued)

(51) **Int. Cl.**
B05C 1/00 (2006.01)
B05C 1/02 (2006.01)
(Continued)

(52) **U.S. Cl.**
CPC ***B05C 1/006*** (2013.01); ***B05C 1/027*** (2013.01); ***B05C 13/00*** (2013.01); ***B05D 1/002*** (2013.01); ***B05D 5/061*** (2013.01)

(58) **Field of Classification Search**
None
See application file for complete search history.

(56) **References Cited**

U.S. PATENT DOCUMENTS

8,168,255 B2 5/2012 Samukawa et al.
9,573,144 B2 2/2017 Wang et al.
(Continued)

FOREIGN PATENT DOCUMENTS

JP 2007230849 A 9/2007
JP 2002028552 A 1/2022
WO 2019241389 A1 12/2019

OTHER PUBLICATIONS

International Search Report issued to PCT/US2021/060598 on Mar. 22, 2022.

Primary Examiner — Jethro M. Pence
(74) *Attorney, Agent, or Firm* — Patterson + Sheridan, LLP

(57) **ABSTRACT**

An optical device coating assembly is provided. The optical device coating assembly includes a substrate support operable to retain an optical device substrate. The coating assembly further includes a first actuator connected to the substrate support. The first actuator is configured to rotate the substrate support. The coating assembly includes a holder configured to hold a coating applicator against an edge of the optical device substrate when the optical device substrate is rotated on the substrate support and a second actuator operable to apply a force on the holder in a direction towards the substrate support. The second actuator is a constant force actuator.

16 Claims, 5 Drawing Sheets

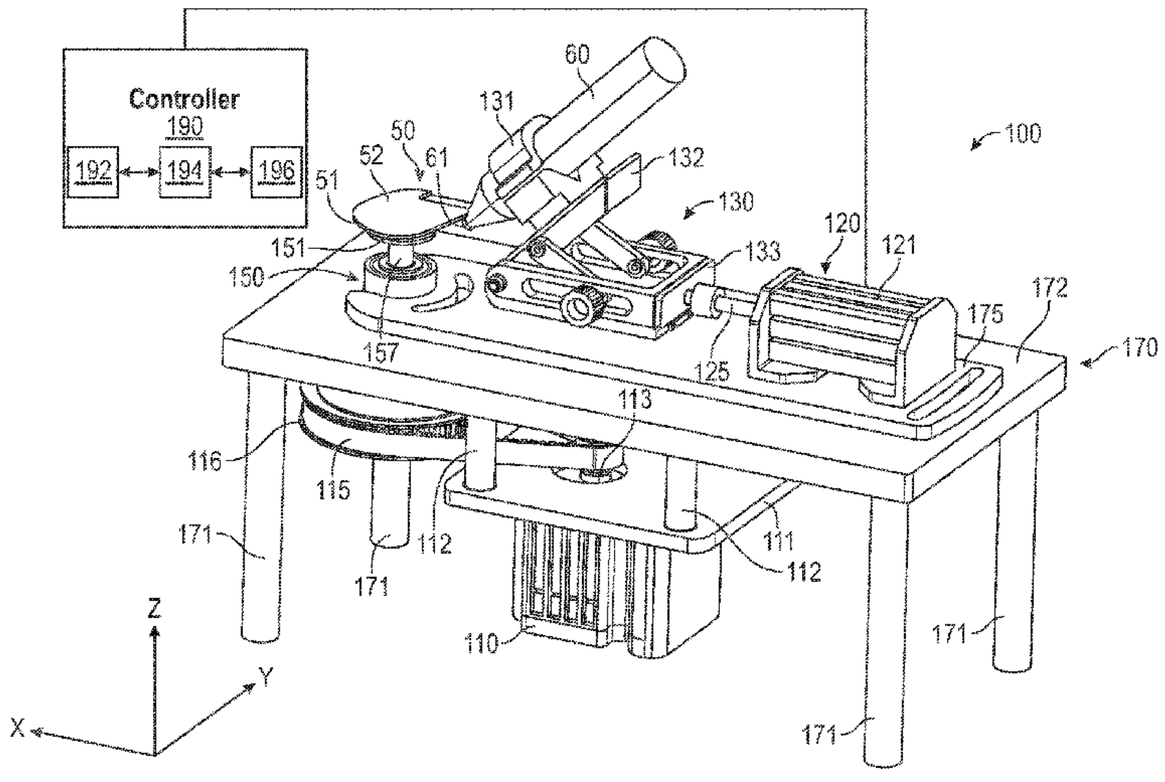

Related U.S. Application Data

(60) Provisional application No. 63/117,569, filed on Nov. 24, 2020.

(51) **Int. Cl.**

B05C 13/00	(2006.01)
B05D 1/00	(2006.01)
B05D 5/06	(2006.01)

(56) **References Cited**

U.S. PATENT DOCUMENTS

10,307,724	B2 *	6/2019	Crnogorac	B05C 11/08
11,413,649	B2	8/2022	Otsuki et al.	
11,534,792	B2	12/2022	Schlichtenbrede et al.	
11,850,621	B2	12/2023	Wang et al.	
2014/0038422	A1	2/2014	Pavani et al.	
2019/0377200	A1	12/2019	Xing et al.	

* cited by examiner

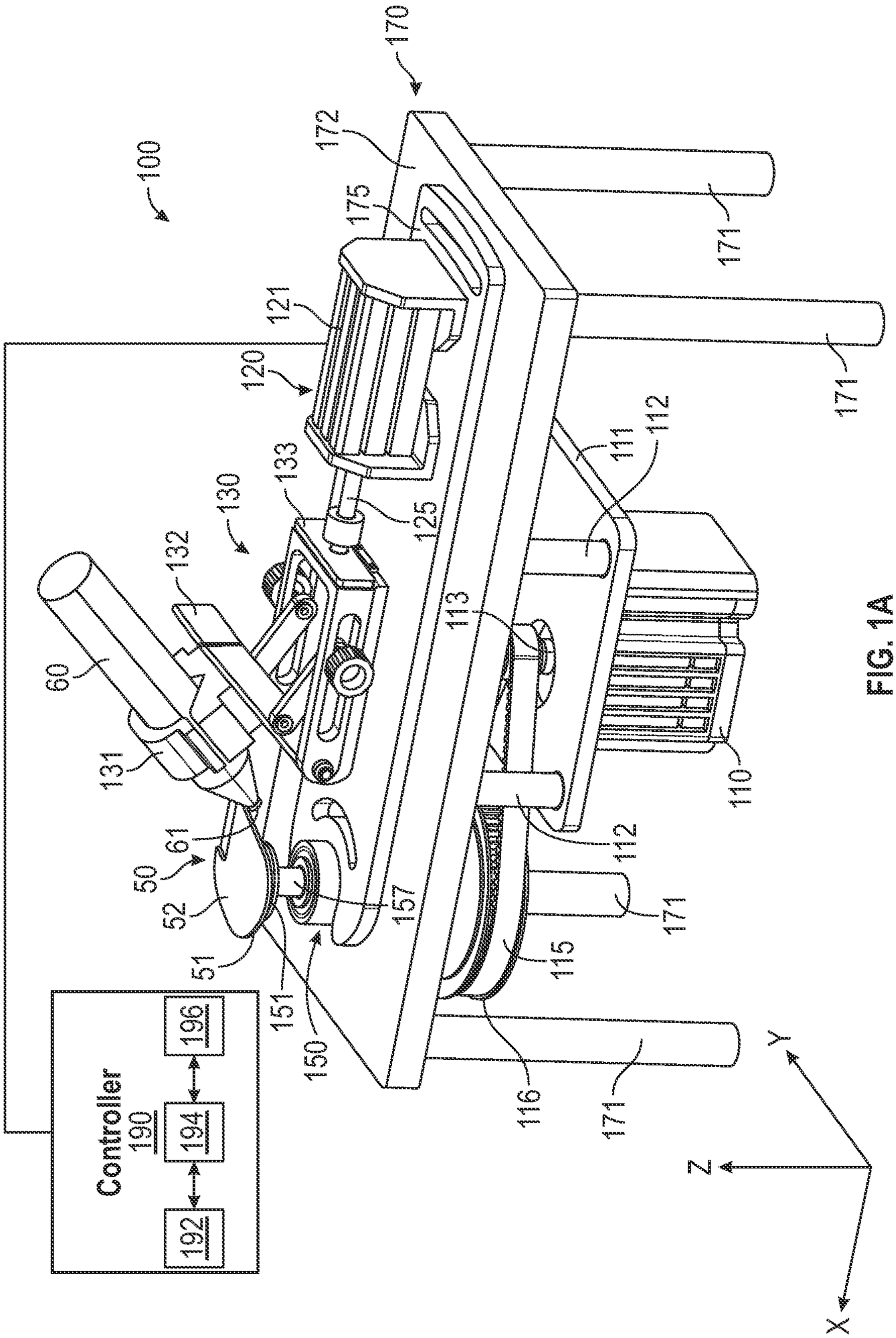
100
170
172
175
171
121
120
133
130
125
132
60
131
61
50
52
51
157
151
150
113
111
112
110
115
116
Controller
190
192
194
196
Z
Y
X

FIG. 1A

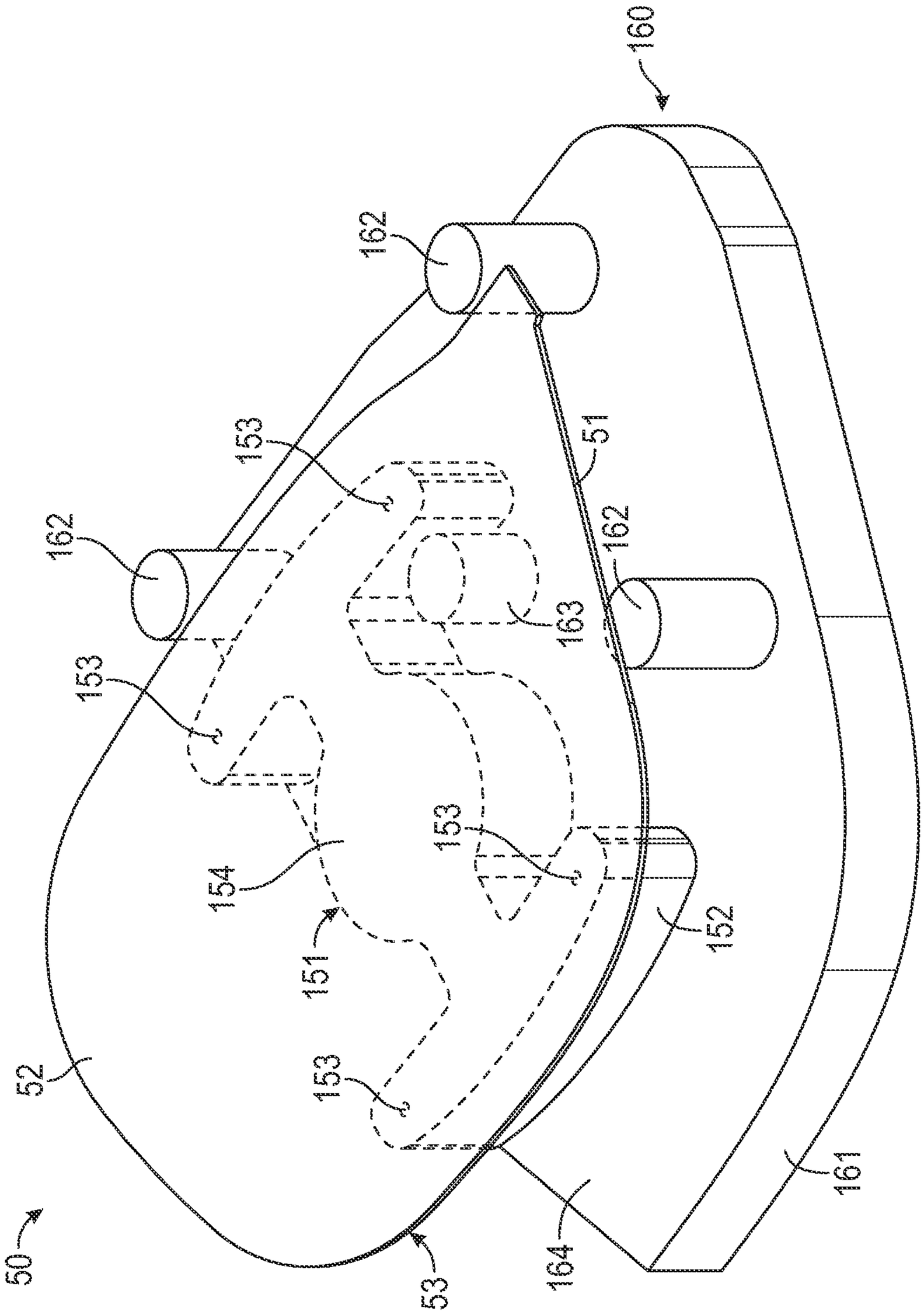
160
162
153
51
162
153
163
153
154
153
152
151
153
52
50
53
164
161

FIG. 1B

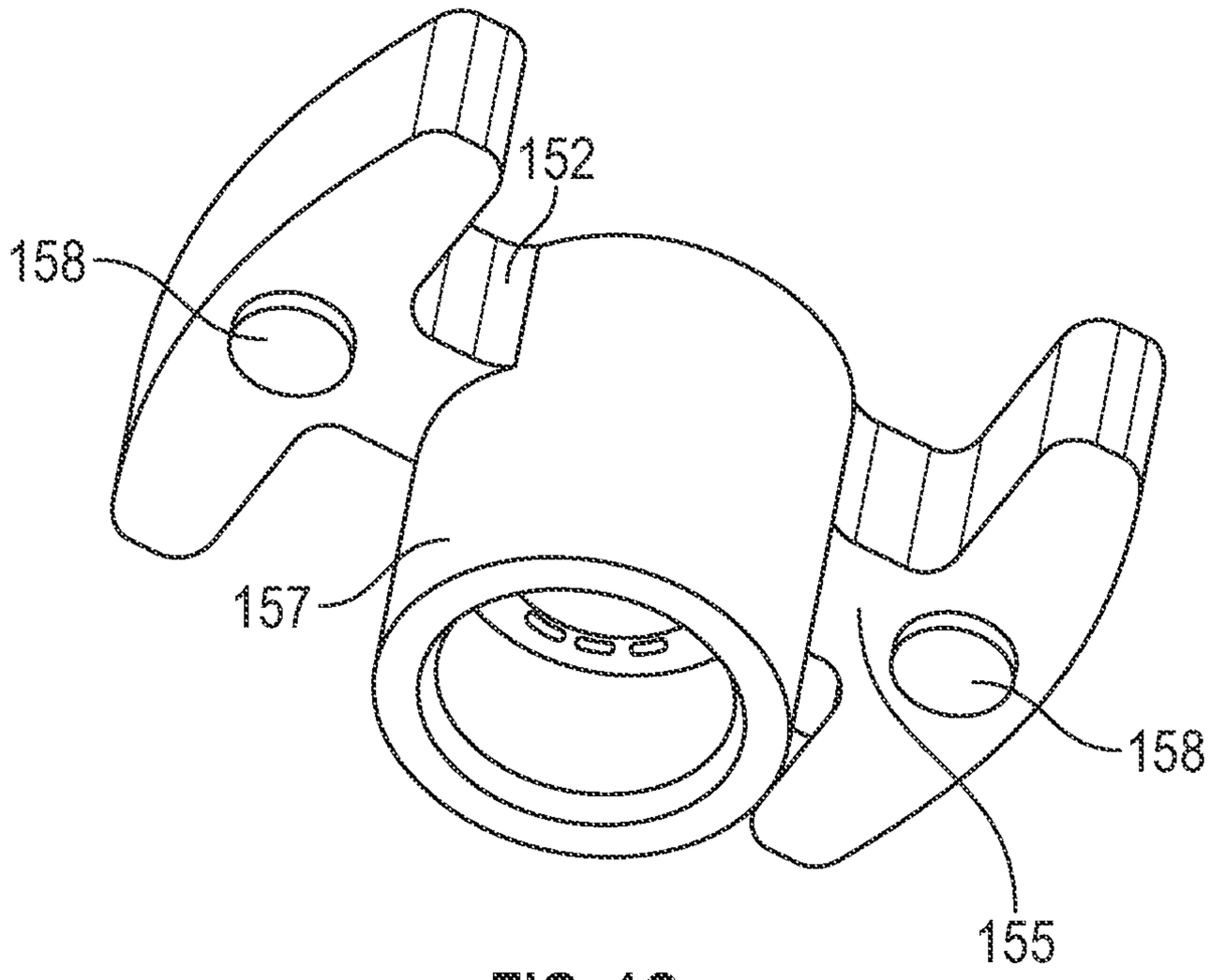

FIG. 1C

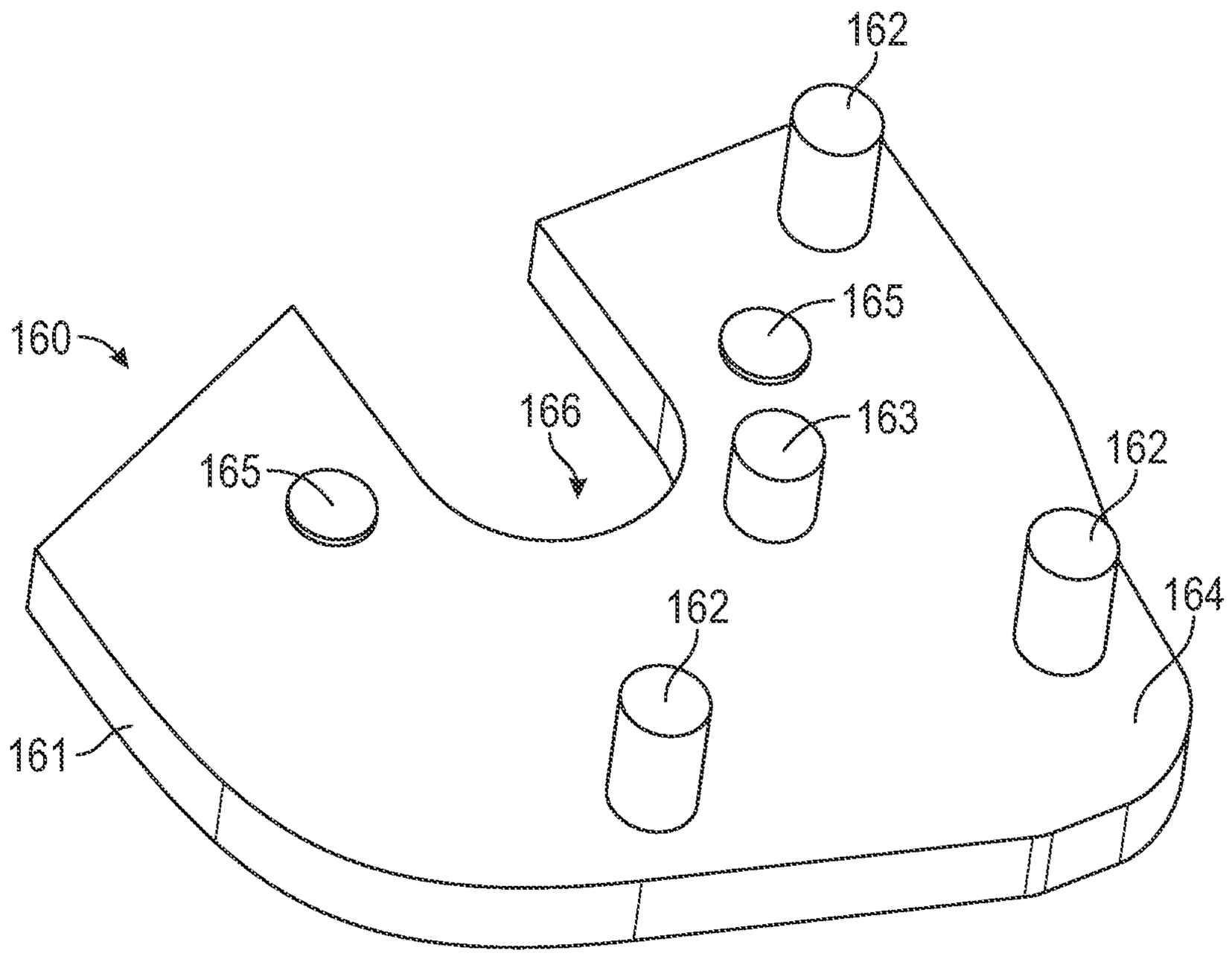

FIG. 1D

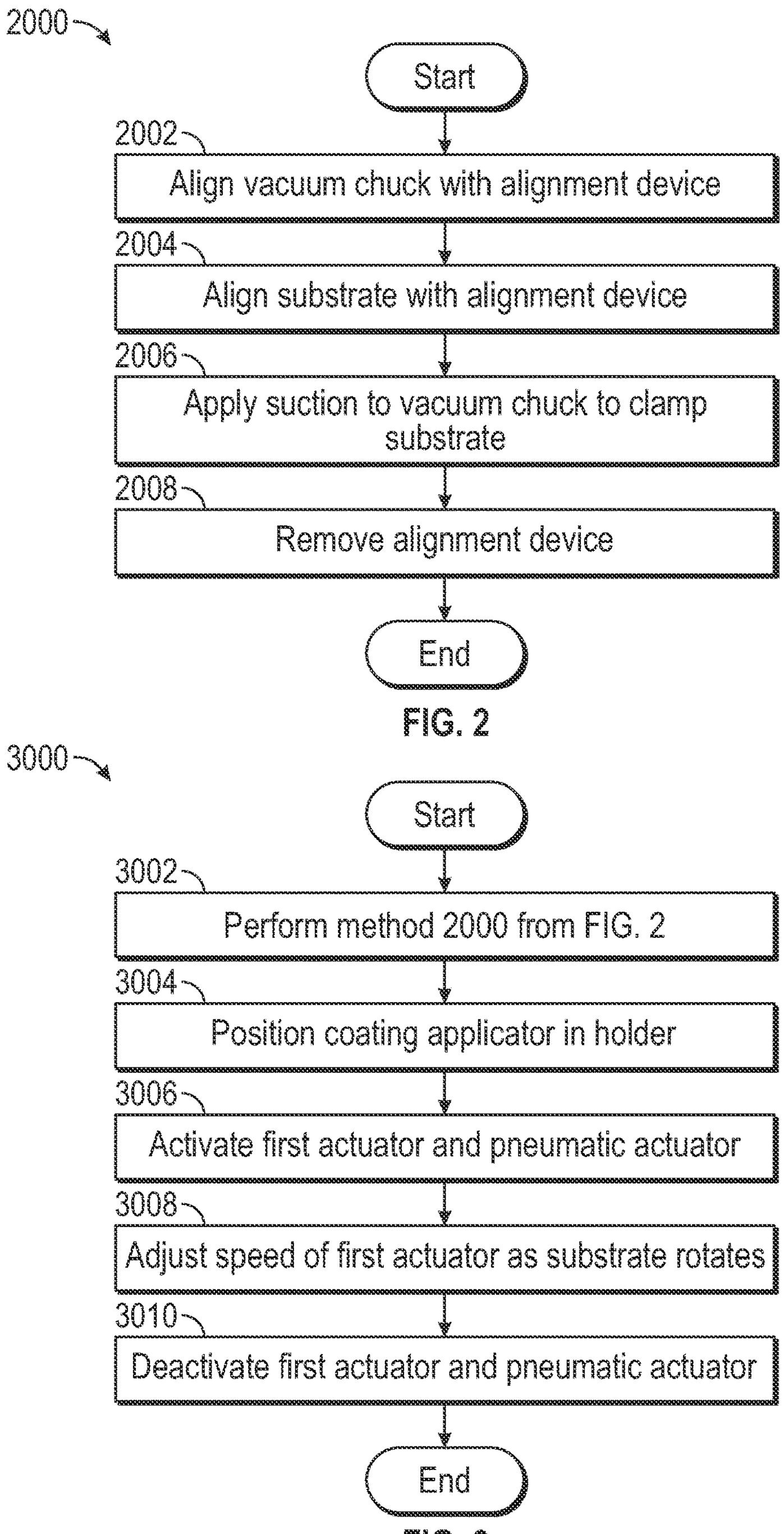
2000
Start
2002
Align vacuum chuck with alignment device
2004
Align substrate with alignment device
2006
Apply suction to vacuum chuck to clamp substrate
2008
Remove alignment device
End

FIG. 2

3000
Start
3002
Perform method 2000 from FIG. 2
3004
Position coating applicator in holder
3006
Activate first actuator and pneumatic actuator
3008
Adjust speed of first actuator as substrate rotates
3010
Deactivate first actuator and pneumatic actuator
End

FIG. 3

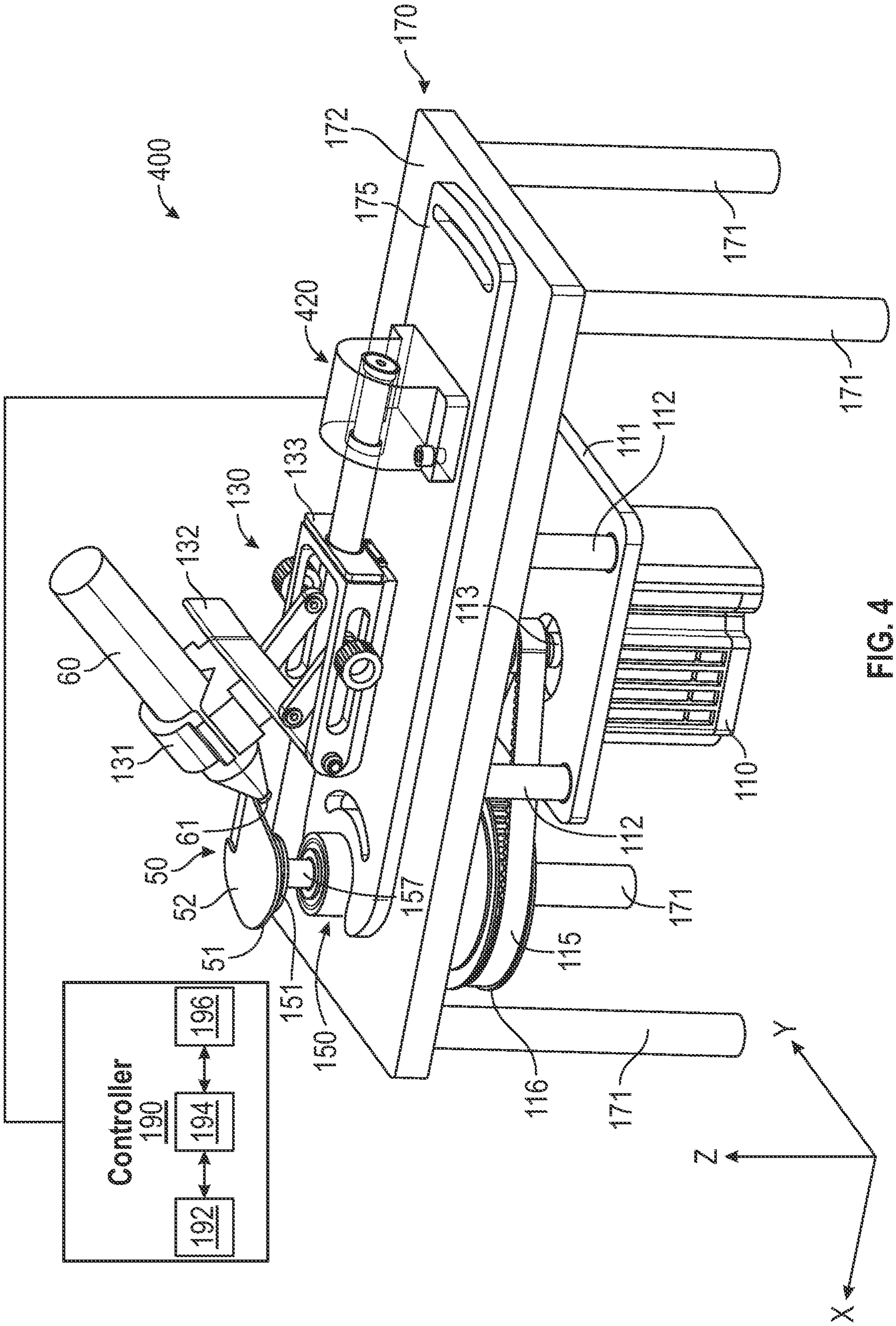
400
170
172
175
171
420
133
130
132
60
131
61
50
52
51
157
112
111
113
110
151
150
116
115
15
Controller
190
196
194
192
Z
Y
X

FIG. 4

EDGE BLACKENING FOR OPTICAL DEVICES

CROSS-REFERENCE TO RELATED APPLICATIONS

This application is a divisional application of U.S. patent application Ser. No. 17/456,410, filed Nov. 24, 2021, which claims benefit of U.S. provisional patent application Ser. No. 63/117,569, filed Nov. 24, 2020, both of which are hereby incorporated herein by reference.

BACKGROUND

Field

Embodiments of the present disclosure generally relate to optical devices. More specifically, embodiments described herein relate to an optical device coating assembly and method of coating the edge of optical devices with optically absorbent material.

Description of the Related Art

Virtual reality is generally considered to be a computer-generated simulated environment in which a user has an apparent physical presence. A virtual reality experience can be generated in 3D and viewed with a head-mounted display (HMD), such as glasses or other wearable display devices that have near-eye display panels as lenses to display a virtual reality environment that replaces an actual environment. Augmented reality, however, enables an experience in which a user can still see through the display lenses of the glasses or other HMD device to view the surrounding environment, yet also see images of virtual objects that are generated for display and appear as part of the environment. Augmented reality can include any type of input, such as audio and haptic inputs, as well as virtual images, graphics, and video that enhances or augments the environment that the user experiences. As an emerging technology, there are many challenges and design constraints with augmented reality.

One such challenge is displaying a virtual image overlaid on an ambient environment. Optical devices including waveguide combiners, such as augmented reality waveguide combiners, and flat optical devices, such as metasurfaces, are used to assist in overlaying images. Generated light is propagated through an optical device until the light exits the optical device and is overlaid on the ambient environment.

Optical devices may require coating the edges of the optical devices with a coating of optically absorbent material. The coating of optically absorbent material improves the performance of the optical device. It is desirable for the coating to be uniform or substantially uniform across the entire edge of the optical device. Waveguide combiners generally have an irregular shape, which presents a challenge for providing a uniform coating on the edges of the waveguide combiner.

Accordingly, what is needed in the art are improved methods of coating the edges of optical devices with the optically absorbent material.

SUMMARY

In one embodiment, an optical device coating assembly is provided. The optical device coating assembly includes a substrate support operable to retain an optical device substrate. The coating assembly further includes a first actuator connected to the substrate support. The first actuator is configured to rotate the substrate support. The coating assembly includes a holder configured to hold a coating applicator against an edge of the optical device substrate when the optical device substrate is rotated on the substrate support and a second actuator operable to apply a force on the holder in a direction towards the substrate support. The second actuator is a constant force actuator.

In another embodiment, an optical device coating assembly is provided is provided. The coating assembly includes a substrate support; a first actuator connected to the substrate support, wherein the first actuator is configured to rotate the substrate support; a holder configured to hold a coating applicator against an edge of an optical device substrate that is rotated on the substrate support; and a controller in communication with the first actuator, the controller configured to cause the first actuator to adjust the rotational speed of the substrate support in order to cause different portions of an edge of a non-circular optical device substrate positioned on the substrate support to rotate against a coating applicator in the holder at a constant linear speed.

In another embodiment, a method of coating an optical device substrate is provided. The method includes positioning an optical device substrate on a substrate support, the optical device substrate including a bottom surface, a top surface, and one or more edges connecting the bottom surface with the top surface; rotating the substrate support with a first actuator to rotate the optical device substrate; and applying an optically absorbent coating to the one or more edges of the optical device substrate with a coating applicator positioned in a holder as the optical device substrate is rotated, wherein a second actuator applies a constant force to the holder during the applying of the optically absorbent coating.

BRIEF DESCRIPTION OF THE DRAWINGS

So that the manner in which the above recited features of the present disclosure can be understood in detail, a more particular description of the disclosure, briefly summarized above, may be had by reference to embodiments, some of which are illustrated in the appended drawings. It is to be noted, however, that the appended drawings illustrate only exemplary embodiments and are therefore not to be considered limiting of its scope, and may admit to other equally effective embodiments.

FIG. **1**A is a perspective view of a coating assembly, according to one embodiment.

FIG. **1**B is a perspective view of an alignment device, according to one embodiment.

FIG. **1**C is a bottom perspective view of the vacuum chuck, according to one embodiment.

FIG. **1**D is a top perspective view of the alignment device, according to one embodiment.

FIG. **2** is a process flow diagram of a method for aligning the substrate on the vacuum chuck by using the alignment device, according to one embodiment.

FIG. **3** is a process flow diagram of a method for coating the edges of the substrate with the coating system, according to one embodiment.

FIG. **4** is a perspective view of a coating assembly, according to one embodiment.

To facilitate understanding, identical reference numerals have been used, where possible, to designate identical elements that are common to the figures. It is contemplated

that elements and features of one embodiment may be beneficially incorporated in other embodiments without further recitation.

DETAILED DESCRIPTION

Embodiments of the present disclosure generally relate to optical devices. More specifically, embodiments described herein relate to equipment and methods for coating the edge(s) of optical devices (e.g., edges of a substrate to be used as a waveguide combiner or a flat optical device) with an optically absorbent material.

Although the following is largely described in reference to applying an optically absorbent coating to an optical device substrate that is to be used as a waveguide combiner, the advantages of the disclosure are applicable to applying a coating on the one or more edges of other substrates. Used herein, the term constant linear speed refers to a linear speed that is within 1% of a reference linear speed. Used herein, the term substantially constant linear speed refers to a linear speed that is within 5% of a reference linear speed.

FIG. **1**A is a perspective view of an optical device coating assembly **100**, according to one embodiment. The optical device coating assembly **100** is used to provide a coating on the edges **51** of an optical device substrate **50**.

The optical device substrate **50** includes the edges **51**, a top surface **52**, and a bottom surface **53**. The edges **51** connect the bottom surface **53** with the top surface **52**. The optical device coating assembly **100** can be used to coat the edges **51** of an optical device substrate **50** with a coating, such as a coating of an optically absorbent material. The optically absorbent material can darken (e.g., blacken) the edges of the optical device substrate **50**. In one embodiment, which can be combined with other embodiments described herein, the optical device substrate **50** includes, but is not limited to silicon (Si), silicon dioxide (SiO2), fused silica, quartz, glass, silicon carbide (SiC), germanium (Ge), silicon germanium (SiGe), indium phosphide (InP), gallium arsenide (GaAs), gallium nitride (GaN), or sapphire. In one embodiment, which can be combined with other embodiments described herein, the optical device substrate **50** is a waveguide combiner. In other embodiments, the optical device substrate can be a different type of device, such as a flat optical device, such as a flat optical device including a metasurface. In another embodiment, which can be combined with other embodiments described herein, the optical device substrate **50** can have optical device structures (e.g., structures having critical dimensions less than 1 micron) disposed on the optical device substrate **50**.

The optical device coating assembly **100** includes a substrate support **150**. The substrate support **150** can be used to retain and rotate the optical device substrate **50** such that the edges **51** of the optical device substrate **50** are coated. The optical device coating assembly **100** further includes a first actuator **110** that is used to rotate the substrate supporting surface of the substrate support **150**. The optical device coating assembly **100** further includes a holder **130** configured to hold an applicator **60** (e.g., a marker) that is used to coat the edges **51** of the optical device substrate **50**. The optical device coating assembly **100** further includes a pneumatic actuator **120** (also referred to as second actuator) that is used to move the holder **130** and the applicator **60**, for example in the X-direction, to enable the applicator **60** to contact and coat the edges **51** of the optical device substrate **50**.

The optical device coating assembly **100** further includes a platform **170** that is used to support and arrange the other components of the optical device coating assembly **100**. The platform **170** includes four legs **171** and a top **172** that is supported by the four legs **171**. The optical device coating assembly **100** further includes a mounting block **175** positioned on the top **172** of the platform **170**. In some embodiments, the mounting block **175** can include a track or guide (not shown) that can be used to ensure the holder **130** only moves in a specified direction (e.g., only in the X-direction). For example, the holder **130** could include a protrusion (not shown) extending from the bottom of the holder **130** to ensure the holder **130** moves along the track or guide in the mounting block **175** to provide for the movement that occurs only in the specified direction.

The substrate support **150** can include a vacuum chuck **151**. The optical device substrate **50** can be placed on the vacuum chuck **151**. The vacuum chuck **151** can be replaceable. The vacuum chuck **151** can grip defined zones of the optical device substrate **50**, such as the non-exclusion zones of the optical device substrate **50**. Although this disclosure describes the substrate being placed on **151** vacuum chuck, other types of substrate supporting surfaces can also be used. The vacuum chuck **151** can hold the optical device substrate **50** in place as the optical device substrate **50** is rotated. Additional information on the vacuum chuck is provided in the description of FIGS. **1**B-**1**D below. The substrate support **150** can further include a rotary shaft **157** that is connected to the vacuum chuck **151**. The rotary shaft **157** is coupled to the first actuator **110** as described below enabling the first actuator **110** to control the rotation of the vacuum chuck **151**. The first actuator **110** and the vacuum chuck **151** may be configured to rotate at least 360 degrees enabling the coating applicator **60** to coat the edges **51** of the optical device substrate **50** along the rotation.

The first actuator **110** is used to rotate the substrate support **150**. The first actuator **110** can be an electric motor that is configured to rotate at different speeds, such as a servo or a motor connected to a variable frequency drive. The first actuator **110** can include an output shaft **113**. The output shaft **113** of the first actuator **110** can be coupled to another pulley (not shown). The optical device coating assembly **100** further includes a belt **115** and a pulley **116** to couple the rotational output of the first actuator **110** to the substrate support **150**. The pulley **116** can be coupled to the rotary shaft **157** of the substrate support **150**. The belt **115** and pulley **116** can be used to rotate the substrate support **150** at a different speed than the rotational speed of the first actuator **110**. The belts and pulleys described herein can be configured to be zero backlash belts (e.g., zero backlash timing belt) and pulleys.

The first actuator **110** can be suspended below the top **172** of the platform **170**. The first actuator **110** can be mounted to a plate **111** that is supported by supports **112** that are connected to the top **172** of the platform **170**.

The holder **130** is used to hold the coating applicator **60** against the edges **51** of the optical device substrate **50** as the edges **51** of the optical device substrate **50** are rotated past and against a tip **61** of the coating applicator **60**. The holder **130** includes a clamp **131**, a tilt arm **132**, and a base **133**. The base **133** can be a slidable base that can slide, for example towards or away from the substrate support **150**. The clamp **131** is used to hold the coating applicator **60**. The angle of the tilt arm **132** can be adjusted. For example, in one embodiment the angle of the tilt arm **132** can be adjusted in the XZ plane to orient the coating applicator **60** to be completely horizontal, completely vertical, or any angle in between. In some embodiments, the tilt arm **132** can also allow for angular adjustments in the XY plane, for example

allowing the angle of coating applicator **60** to be adjusted plus or minus 15 degrees in the XY plane.

The coating applicator **60** includes the optically absorbent material to be coated on the edges **51** of the optical device substrate **50**. The coating applicator **60** is shown as a marker pen, but other types of coating applicators can be used. In various embodiments, which can be combined with other embodiments described herein, the applicator **60** can be a marker, pen, marker pen, a sponge applicator, a foam applicator, or a rubber wheel. The coating applicator **60** can apply optically absorbent coatings to the edges **51** of the optical device substrate **50**. Examples of optically absorbent coatings that can be used can include, but are not limited to, one or more pigment or die filled UV curable adhesives, one or more pigment or die filled heat curable adhesives, pigmented ink, or combinations thereof.

The base **133** can be coupled to the pneumatic actuator **120**. The base **133** can receive force from the pneumatic actuator **120** and apply that force to either move the holder **130** and/or to apply a corresponding force against the edges **51** of the optical device substrate **50** through the tip **61** of the coating applicator **60**.

As described in additional detail below in reference to FIG. **1**B, the optical device substrate **50** has an irregular shape (i.e., the top surface **52** of the optical device substrate **50** has an irregular shape). This irregular shape of the optical device substrate **50** makes it necessary for the tip **61** of the coating applicator **60** to move, for example in the X-direction, so that the tip **61** of coating applicator **60** can remain pressed against the edges **51** of the optical device substrate **50** while still allowing for the optical device substrate **50** to be smoothly rotated.

The pneumatic actuator **120** can include a base **121** and an extending portion **125**. The base **121** can receive pressurized air from a compressed air source (not shown) and apply force from the pressurized air to the extending portion **125**. The extending portion **125** can apply this force to press against the base **133** of the holder **130** to couple the force from the pneumatic actuator **120** to the holder **130**, so that the tip **61** of the coating applicator **60** can move in relation to the optical device substrate **50** and/or press against the edges **51** of the optical device substrate **50** as the substrate is rotated on the substrate support **150**.

The pneumatic actuator **120** can be a constant force actuator. The pneumatic actuator **120** can include a low-friction pneumatic cylinder. Using a constant force actuator as the pneumatic actuator **120** allows the pneumatic actuator **120** to apply a constant force to the holder **130** as the holder **130** moves, for example in the X-direction, to accommodate the irregular shape of the optical device substrate **50**. For example, the pneumatic actuator **120** can be configured to move the tip **61** of the coating applicator **60** in the holder **130** from a first position P**1** (i.e., the position in which the tip **61** is located in FIG. **1**A) to a second position P**2** (e.g., a position that the tip **61** would move to when a portion of the edge **51** that extends out further than P**1** from a center of the substrate support **150** is rotated in front of the tip **61**). As the portion of the edge **51** of the optical device substrate **50** that extends out to P**2** is rotated in front of the coating applicator **60**, the pneumatic actuator **120** allows movement of the holder **130** in the X-direction, so that the constant force of the tip **61** of the coating applicator **60** against the edge of the optical device substrate **50** can be maintained.

This constant force applied to the holder **130** allows for the tip **61** of the coating applicator **60** to remain pressed against the edges **51** of the optical device substrate **50** with a corresponding constant force for the entire 360 degrees rotation of the irregularly shaped optical device substrate **50**. For example, during rotation of the optical device substrate **50**, the pneumatic actuator **120** may be configured to move the extending portion **125**, so that the holder **130** moves, and the constant force can remain against the edge **51** of the optical device substrate **50**. This corresponding constant force of the tip **61** of the coating applicator **60** against the edges **51** of the optical device substrate **50** is one factor that enables a coating having a uniform thickness to be applied to the edges **51** of the optical device substrate **50**.

In some embodiments, the constant force applied by of the tip of the coating applicator **60** against the edge **51** of the optical device substrate **50** is from about 0.01 lbf to about 1.0 lbf, such as from about 0.05 lbf to about 0.5 lbf, such as about 0.25 lbf. In some embodiments, the uniform thickness of the coating applied by the coating applicator **60** to the edges **51** of the substrate is between about 100 μm and about 1000 μm, such as from about 300 μm to about 500 μm, such as about 400 μm.

In one embodiment, instead of moving the holder **130**, the angle of the tip **61** of the coating applicator **60** relative to the edge **51** of the optical device substrate **50** may change to accommodate the irregular shape of the optical device substrate **50**. For example, the coating applicator **60** could extend substantially parallel to the surface of the optical device substrate **50** when the portion of edge **51** closest to the center of the substrate support **150** is rotated past the tip **61**. The coating applicator **60** could then rotate in the XZ plane to being substantially perpendicular to the surface of the substrate when the portion of edge **51** furthest from the center of the substrate support **150** is rotated past the tip **61**.

The optical device coating assembly **100** further includes a controller **190** connected to the equipment shown in FIG. **1**A, such as the first actuator **110**, the pneumatic actuator **120**, and the vacuum chuck **151**. The controller **190** can be any type of controller used in an industrial setting, such as a programmable logic controller (PLC). Although the controller **190** is shown as a single component, this is not required. In some embodiments, the controller **190** can be distributed across multiple components of the optical device coating assembly **100**. For example, in some embodiments the first actuator **110** can be a "smart" motor that can be programmed to rotate according to a specific speed profile based on the shape of the top surface of the optical device substrate **50** and the positioning of the optical device substrate **50** on the substrate support **150**. The controller **190** includes a processor **192**, a memory **194**, and input/output (I/O) circuits **196**. The controller **190** can further include one or more of the following components (not shown), such as one or more power supplies, clocks, communication components (e.g., network interface card), and user interfaces typically found in controllers for equipment described herein.

The processor **192** is configured to execute various programs stored in the memory **194**, such as a program configured to execute the methods described below in reference to FIGS. **2** and **3**. The memory **194** can further include various operational settings used to control the optical device coating assembly **100**. For example, the settings can include settings for controlling (1) the force applied by the pneumatic actuator **120** and (2) speed settings for the first actuator **110** based on the shape of the optical device substrate **50** being rotated by the substrate support **150** among various other settings.

The memory **194** can include non-transitory memory. The non-transitory memory can be used to store routines and settings, such as a routine and settings used to execute the

methods described below in reference to FIGS. **2** and **3**. The memory **194** can include one or more readily available types of memory, such as read only memory (ROM) (e.g., electrically erasable programmable read-only memory (EEPROM), flash memory, floppy disk, hard disk, or random access memory (RAM) (e.g., non-volatile random access memory (NVRAM). Routines for coating different optical device substrates **50** can be generally stored in the memory **194**. These routines can be executed by the processor **192** with signals being received from inputs (e.g., speed sensors, motor feedback sensors) and signals being transmitted to outputs (e.g., the first actuator **110** and the pneumatic actuator **120**) through the **1**/O circuits **196**. In one embodiment, the optical device coating assembly **100** can include a solenoid valve (not shown) to supply the pressurized air to the pneumatic actuator **120**.

Although the coating system may include inputs and sensors, it is noteworthy that the optical device coating assembly **100** can be used to apply a uniform coating to the edges **51** of a optical device substrate **50** with very few inputs (e.g., stop/start controls) and in some embodiments zero sensors. This ability of the optical device coating assembly **100** to be fully functional without any sensors or other feedback offers a significant advantage relative to the complex designs included in the conventional techniques mentioned above that generally include multi-axis stages and/or robotic arms along with sensors for edge detection of the substrate and precision dispensers.

The memory **194** of the controller can include a program to adjust the speed of the first actuator **110** along a speed profile that is based on (1) the shape of the optical device substrate **50** (i.e., shape of the top surface **52**) that is to be coated and (2) the positioning of the optical device substrate **50** on the substrate support **150**. This program to adjust the speed of the first actuator **110** based on the shape of the optical device substrate **50** is designed, so that the speed of the first actuator **110** is adjusted as the optical device substrate **50** is rotated in order to cause each portion of a same length of the edges **51** of the optical device substrate **50** to pass the tip **61** of the coating applicator **60** with a constant linear speed or a substantially constant linear speed. Having each portion of the edges **51** of the optical device substrate **50** pass the tip **61** of the coating applicator **60** with the same linear speed is another factor that enables a coating having a uniform thickness to be applied to the edges **51** of the optical device substrate **50**. In one embodiment, a distance from a center point of rotation on the optical device substrate **50** to the point on the edge **51** of the optical device substrate **50** is used to determine the rotational speed of the substrate support **150** when that point passes the coating applicator **60**.

FIG. **1**B is a perspective view of an alignment device **160** and the optical device substrate **50** aligned on the vacuum chuck **151**, according to one embodiment. The vacuum chuck **151** includes a body **152** having a top surface **154**. The optical device substrate **50** is positioned on the top surface **154** of the body **152** of the vacuum chuck **151**. The body **152** of the vacuum chuck **151** can include holes **153** in the top surface **154** for providing suction to keep the optical device substrate **50** properly positioned on the vacuum chuck **151**.

The optical device substrate **50** is described as being a substrate to be used as a waveguide combiner in an augmented reality device. Substrates, such as the optical device substrate **50** can often have a non-circular shape, such as an irregular shape. The shape referred to here is the shape of the top surface of the substrate, such as the top surface **52** of the optical device substrate **50**. Circular substrates are often used when the substrate being processed is rotated as it is generally easy to properly align circular substrates on the surface on which the substrate will be rotated. Rotating non-circular substrates (e.g., rectangular substrates) can be somewhat more challenging than rotating circular substrates and rotating irregularly shaped substrates (e.g., the optical device substrate **50**) can be more challenging than rotating a rectangular substrate. An irregularly shaped substrate can be defined as a substrate that has no line of symmetry, which can bisect the top surface of the substrate into two identical portions. For example, the top surface **52** of the optical device substrate **50** cannot be bisected into two identical portions. A non-circular substrate can be defined as any substrate not having top surface with a circular shape and non-circular substrates include common shapes, such as substrates having a rectangular shape and also include irregularly shaped substrates.

Finding a proper center of rotation for an irregularly shaped substrate, such as the optical device substrate **50**, can be challenging. Properly aligning an irregularly shaped substrate (e.g., optical device substrate **50**) on the rotational support (e.g., vacuum chuck **151**) helps the irregularly shaped substrate stay balanced when rotated. To assist in aligning the irregularly shaped optical device substrate **50** over the vacuum chuck **151**, the alignment device **160** can be used.

The alignment device **160** can be placed under the body **152** of the vacuum chuck **151** as further described below in reference to FIGS. **1**C and **1**D. The alignment device **160** can include a base **161**. The base **161** can include a top surface **164**. The alignment device **160** can further include a plurality of alignment pins **162** extending upward from the top surface **164** of the base **161**. The alignment device **160** can further include a registration pin **163** extending upward from the top surface **164** of the base **161**. The alignment pins **162** can extend a further distance (e.g., have a higher height) from the base **161** than the registration pin **163** extends from the base **161**. This height difference between the alignment pins **162** and the registration pin **162** allows the optical device substrate **50** to be placed on the vacuum chuck **151** without the registration pin **163** contacting the optical device substrate **50**.

The registration pin **163** can be used to align the alignment device **160** with the vacuum chuck **151**. In one embodiment, the registration pin **163** and the vacuum chuck **151** can include markings (e.g., matching lines or corresponding arrows) to assist with properly aligning the alignment device **160** with the vacuum chuck **151**. The alignment pins **162** can be used to align the optical device substrate **50** on the vacuum chuck **151** after the vacuum chuck **151** is aligned with the registration pin **163**. In some embodiments, the edges **51** of the optical device substrate **50** can contact the alignment pins **162**, for example as shown in FIG. **1**B. In some embodiments, the alignment pin **162** and the optical device substrate **50** can include markings (e.g., matching lines or corresponding arrows) to assist with properly aligning the optical device substrate **50** with the alignment pins **162**, so that the optical device substrate **50** is properly positioned on the vacuum chuck **151**.

FIG. **1**C is a bottom perspective view of the vacuum chuck **151**, according to one embodiment. The vacuum chuck **151** further includes a shaft **157** extending below the body **152** of the vacuum chuck **151**. The body **152** of the vacuum chuck includes a bottom surface **155**. Two magnets **158** are positioned on the bottom surface **155** of the body **152** of the vacuum chuck **151**.

FIG. **1**D is a top perspective view of the alignment device **160**, according to one embodiment. Two magnets **165** are positioned on the top surface **164** of the base **161** of the alignment device **160**. The magnets **165** can be positioned to align with the magnets **158** positioned on the bottom surface **155** of the body **152** of the vacuum chuck **151** to further assist in aligning the vacuum chuck **151** with the alignment device **160**. The alignment device **160** can further include a notch **166**. The notch **166** can allow the alignment device **160** to extend partially around the shaft **157** of the vacuum chuck **151** when the vacuum chuck **151** is aligned with the alignment device **160**, for example as shown in FIG. **1**B. The notch **166** also allows for removal of the alignment device **160** once the optical device substrate **50** is properly aligned on the vacuum chuck **151**, so that the edges **51** of the optical device substrate **50** can be coated by the optical device coating assembly **100**.

FIG. **2** is a process flow diagram of a method **2000** for aligning the optical device substrate **50** on the vacuum chuck **151** by using the alignment device **160**, according to one embodiment. The method begins at block **2002**.

At block **2002**, the alignment device **160** is aligned with the vacuum chuck **151**. In some embodiments, block **2002** can be performed prior to positioning the optical device substrate **50** on the vacuum chuck **151**. Aligning the vacuum chuck **151** with the alignment device **160** can include positioning the notch **166** (FIG. **1**D) of the alignment device **160** around the shaft **157** (FIG. **1**C) of the vacuum chuck **151**. This alignment can further include positioning the alignment device **160** to cause the magnets on the top surface **164** of the alignment device **160** to magnetically couple to the magnets **158** on the bottom surface **155** of the body **152** of the vacuum chuck **151**. This alignment can further include positioning alignment device **160** to cause the vacuum chuck **151** to contact the registration pin **163**, for example as shown in FIG. **1**B. In one embodiment, the registration pin **163** and the vacuum chuck **151** can include markings (e.g., matching lines) to assist with properly aligning the alignment device **160** with the vacuum chuck **151**. For example, in some embodiments these markings can be made to physically contact each other.

At block **2004**, the optical device substrate **50** is aligned with the alignment pins **162** on the alignment device **160**. For example, the edges **51** of the optical device substrate **50** can be positioned to contact the alignment pins **162**, for example as shown in FIG. **1**B. In some embodiments, the alignment pin **162** and the optical device substrate **50** can include markings (e.g., matching lines) to assist with properly aligning the optical device substrate **50** with the alignment pins **162**, so that the optical device substrate **50** is properly positioned on the vacuum chuck **151**. For example, in some embodiments these markings can be made to physically contact each other. Aligning the optical device substrate **50** with the alignment pins **162** allows a proper center of rotation to be established for the optical device substrate **50**, so that the optical device substrate **50** can remain balanced when rotated by the substrate support **150**. Furthermore, using the specified alignment resulting from use of the alignment pins **162** allows a clear starting point on the edges **51** of the optical device substrate **50** to be defined for coating the edges **51** of the optical device substrate **50**. With this clear starting point defined, the speed at which the substrate support **150** is rotated can then be properly adjusted throughout the rotation of the optical device substrate **50**, so that the linear speed of different portions of the edges **51** of the optical device substrate **50** remains constant as these different portions pass by and against the tip **61** of the coating applicator **60**. This constant linear speed helps achieve a uniform coating on the edges **51** of the optical device substrate **50**.

At block **2006**, suction is applied to the vacuum chuck **151** to clamp the optical device substrate **50**, so the optical device substrate **50** remains in the properly aligned position accomplished at block **2004**. For example, the suction can be applied to the holes **153** shown in FIG. **1**B to clamp the optical device substrate **50** in the proper position.

At block **2008**, with the optical device substrate **50** clamped in the proper position, the alignment device **160** is removed. With the optical device substrate **50** in the proper position and the alignment device **160** removed, the edges **51** of the optical device substrate **50** can be coated by the optical device coating assembly **100**. After the optical device substrate **50** is coated, the method **2000** can then be repeated using the same alignment device **160** when a substrate that is the same as the optical device substrate **50** is to be coated. If a substrate having a different size or shape than the optical device substrate **50** is to be coated, then a different alignment device may be used. For example, a larger alignment device may be needed for a larger substrate that has the same shape as the optical device substrate **50**, so that the alignment pins can be placed further from the center of the vacuum chuck **151**. Having an alignment device for the substrates of the different sizes and shapes can significantly reduce the amount of time spent properly loading the different substrates on the substrate support **150**.

FIG. **3** is a process flow diagram of a method **3000** for coating the edges **51** of the optical device substrate **50** with the optical device coating assembly **100**, according to one embodiment. The method begins at block **3002**.

At block **3002**, the method **2000** is performed as described in reference to FIG. **2**, so that the optical device substrate **50** is properly positioned on the vacuum chuck **151**.

At block **3004**, the coating applicator **60** is positioned in the holder **130**. This positioning can include positioning the coating applicator **60** positioned into the clamp **131** of the holder **130**. This positioning can further include adjusting the tilt arm **132** to ensure the tip **61** of the coating applicator **60** is at the proper height to contact the edges **51** of the optical device substrate **50** when the optical device substrate **50** is rotated on the vacuum chuck **151**. The coating applicator **60** includes the coating to be applied to the edges **51** of the optical device substrate **50**. In some embodiments, the coating can be an optically absorbent coating that can be used to darken (e.g., blacken) the edges **51** of the optical device substrate **50**.

At block **3006**, the first actuator **110** and the pneumatic actuator **120** are activated. Activating the first actuator **110** causes the substrate support **150** to begin to rotate, so that the optical device substrate **50** on the vacuum chuck **151** of the substrate support **150** begins to rotate. Activating the pneumatic actuator **120** causes the pneumatic actuator **120** to apply a force on the holder **130**. For example, the force from the pneumatic actuator **120** can move the holder **130** towards substrate support **150** (e.g., the X-direction in FIG. **1**A). Because the coating applicator **60** was positioned at block **3004** to cause the tip **61** of the coating applicator **60** to be at the proper height to contact the edges **51** of the optical device substrate **50**, the force from the pneumatic actuator **120** also causes the tip **61** of the coating applicator **60** to contact a portion of an edge **51** of the optical device substrate **50**.

In some embodiments, the controller **190** can be used to activate the first actuator **110** and the pneumatic actuator **120**. In some embodiments, the actuators **110**, **120** can be

activated simultaneously. In other embodiments, the pneumatic actuator **120** can be activated and then after a short delay (e.g., 50 ms, 100 ms, 500 ms etc.), the first actuator **110** can be activated. The short delay can be timed to allow the tip **61** of the coating applicator **60** to briefly contact the starting point on the edge **51** of the optical device substrate **50** before the optical device substrate **50** begins to rotate, so that the starting point on the edge is coated similarly to the rest of the locations on the edges **51** of the substrate.

At block **3008**, the speed of the first actuator **110** is adjusted to vary the speed at which the vacuum chuck **151** on the substrate support **150** rotates in order to cause different portions of one or more edges **51** or all portions all of the edges **51** (i.e., 360 degrees around the edges **51**) of the optical device substrate **50** to pass by and against the tip **61** of the coating applicator **60** at a constant linear speed or a substantially constant linear speed. The controller **190** can be used to vary the speed of the first actuator **110** during block **3008**. The controller **190** can be configured to control this rotational speed to cause the constant or substantially constant linear speed of the edges **51** of the optical device substrate **50** by and against the coating applicator **60** for a non-circular substrate (e.g., a rectangular substrate) or for an irregularly shaped substrate (e.g., the optical device substrate **50**). As mentioned above, although the controller **190** is shown as a single controller in FIG. **1**A, this is meant for ease of illustration, and control of the different components of the optical device coating assembly **100** can be distributed across multiple components. For example, in one embodiment, the first actuator **110** is a "smart" motor that can include its own controller to vary the speed at which the motor rotates in order to cause the constant or substantially constant linear speed of the edges **51** of the optical device substrate **50** past and against the coating applicator **60**. In another embodiment, the first actuator **110** is a servo that receives signals, for example from the controller **190**, that are used to control the speed of the first actuator **110**.

During blocks **3006** and **3008**, the vacuum chuck **151** is configured to hold the optical device substrate **50** positioned on the vacuum chuck **151** in place as the pneumatic actuator **120** applies a constant force on the edges **51** of the optical device substrate **50** during rotation of the vacuum chuck **151** for 360 degrees.

At block **3010**, the first actuator **110** and the pneumatic actuator **120** are deactivated. Deactivating the first actuator **110** causes the substrate support **150** to stop rotating. Deactivating the pneumatic actuator **120** can cause the holder **130** and the coating applicator **60** to move away from the substrate support **150**. In some embodiments, the pneumatic actuator **120** can be deactivated and then after a short delay the first actuator **110** can be deactivated. The pneumatic actuator **120** can be deactivated when a specified amount of rotation has occurred with the coating applicator **60** being pressed against the edges **51** of the optical device substrate **50**. In some embodiments, this specified amount of rotation can be when one or more full rotations of 360 degrees from the starting point (i.e., the first point on the edge **51** that is coated) are completed. The controller **190** can be used to deactivate the first actuator **110** and the pneumatic actuator **120**.

The optical device coating assembly **100** described above can also be used to provided different sections of uniform thickness around the edges of a substrate, such as the optical device substrate **50**. For example, if specifications call for a rectangular substrate to have a uniform coating of a first thickness on the two longer sides of the rectangular substrate and a uniform coating of a second thickness on the shorter two sides of the rectangular substrate, then optical device coating assembly **100** can adjust the rotational speed of the substrate support **150** by adjusting the speed of the first actuator **110** and/or adjust the amount of force applied by the pneumatic actuator **120** to generate the different thicknesses of uniform coatings. For example, to apply a thicker coating the rotational speed of the substrate support **150** can be slowed down by slowing down the first actuator **110**, or the amount of force applied by the pneumatic actuator **120** can be increased. Conversely, to apply a thinner coating the rotational speed of the substrate support **150** can be increased by speeding up the first actuator **110**, or the amount of force applied by the second actuator **120** can be decreased. The speed of the first actuator **110** and/or the force applied by the pneumatic actuator **120** can also be gradually changed to apply gradual changes in the thickness of the coating applied to the edges.

FIG. **4** is a perspective view of an optical device coating assembly **400**, according to one embodiment. The optical device coating assembly **400** is the same as the optical device coating assembly **100** described above in reference to FIGS. **1**A-**1**D except that the pneumatic actuator **120** is replaced with a voice coil **420**. The voice coil **420** is a constant force actuator like the pneumatic actuator **120** described above. Thus, the voice coil **420** can provide any and all of the same functionality described above in reference to the pneumatic actuator **120**. While the pneumatic actuator **120** uses compressed air to apply a constant force on the holder **130** that holds the coating applicator against the optical device substrate **50**, the voice coil **420** uses electrical power to apply a constant force on the holder **130** that holds the coating applicator against the optical device substrate **50**.

The coating assemblies and related methods described above can be used for coating the edge(s) of optical device substrates (e.g., edges of a substrate to be used as a waveguide combiner or a flat optical device) with a uniform thickness of optically absorbent material. In one embodiment, the thickness of the coating is from about 10 μm to about 100 μm, with a surface encroachment width ranging from about 0 to about 1000 μm. This uniform thickness on the edge(s) of the optical devices is achieved by using the constant force actuator (e.g., pneumatic actuator or voice coil) to apply the coating on the edge of the substrate as the substrate is rotated past and against a coating applicator. In addition to the constant force applied by the actuator, the rotational speed of the substrate is adjusted throughout the rotation to cause edges of the substrate to move past and against the coating applicator at a constant linear speed, so that different segments of the edges spend the same time passing by the applicator. This constant force and constant linear speed results in a uniform coating on the edges of the substrate even when the substrate has an irregular shape, which is common for optical devices, such as waveguide combiners. Furthermore, the equipment and methods described herein are substantially less complex than conventional techniques used to apply a uniform coating on an edge of substrate, such as techniques involving multi-axis stages and/or robotic arms along with sensors for edge detection of the substrate and precision dispensers. While being substantially less complex than these conventional techniques, the equipment and methods described herein offers significantly improved uniformity results when compared to manually applying the coating to an edge of an optical device substrate.

While the foregoing is directed to examples of the present disclosure, other and further examples of the disclosure may

be devised without departing from the basic scope thereof, and the scope thereof is determined by the claims that follow.

What is claimed is:

1. An optical device coating assembly, comprising:

a substrate support disposed on a platform;

a first actuator connected to the substrate support, wherein the first actuator is configured to rotate the substrate support;

a holder disposed on the platform and configured to hold a coating applicator against an edge of an optical device substrate when the substrate support is rotated; and

a controller in communication with the first actuator, the controller configured to cause the first actuator to adjust a rotational speed of the substrate support in order to cause different portions of an edge of a non-circular optical device substrate positioned on the substrate support to rotate against a coating applicator in the holder at a constant linear speed.

2. The optical device coating assembly of claim **1**, wherein the controller is configured adjust the rotational speed of the substrate support to cause all portions of the edges of the non-circular optical device substrate positioned on the substrate support to rotate against the coating applicator in the holder at the constant linear speed as the substrate support is rotated 360 degrees.

3. The optical device coating assembly of claim **1**, wherein the controller is further configured to cause the first actuator to adjust the rotational speed of the substrate support in order to cause different portions of an edge of an irregularly shaped optical device substrate positioned on the substrate support to rotate against a coating applicator in the holder at the constant linear speed.

4. The optical device coating assembly of claim **3**, wherein the controller is configured adjust the rotational speed of the substrate support to cause all portions of the edges of the irregularly shaped optical device substrate positioned on the substrate support to rotate against the coating applicator in the holder at the constant linear speed as the substrate support is rotated 360 degrees.

5. The optical device coating assembly of claim **3**, further comprising a second actuator that is configured to move a tip of a coating applicator in the holder from a first position to a second position, wherein the second actuator is configured to cause an applicator positioned in the holder to apply a coating on an edge of the optical device substrate in the first position and the second position.

6. The optical device coating assembly of claim **1**, wherein the substrate support includes a vacuum chuck.

7. The optical device coating assembly of claim **6**, wherein the vacuum chuck is configured to hold the optical device substrate positioned on the vacuum chuck in place as the substrate support is rotated.

8. The optical device coating assembly of claim **1**, wherein the coating applicator is a marker, a pen, a marker pen, a sponge applicator, a foam applicator, or a rubber wheel.

9. An optical device coating assembly, comprising:

a substrate support disposed on a platform;

a first actuator connected to the substrate support, wherein the first actuator is configured to rotate the substrate support;

a holder disposed on the platform and configured to hold a coating applicator against an edge of an optical device substrate when the substrate support is rotated;

a controller in communication with the first actuator, the controller configured to cause the first actuator to adjust a rotational speed of the substrate support in order to cause different portions of an edge of a non-circular optical device substrate positioned on the substrate support to rotate against a coating applicator in the holder at a constant linear speed; and

a second actuator configured to move a tip of a coating applicator in the holder from a first position to a second position.

10. The optical device coating assembly of claim **9**, wherein the substrate support includes a vacuum chuck.

11. The optical device coating assembly of claim **10**, wherein the vacuum chuck is configured to hold the optical device substrate positioned on the vacuum chuck in place as the substrate support is rotated.

12. The optical device coating assembly of claim **9**, wherein the controller is configured adjust the rotational speed of the substrate support to cause all portions of the edges of the non-circular optical device substrate positioned on the substrate support to rotate against the coating applicator in the holder at the constant linear speed as the substrate support is rotated 360 degrees.

13. The optical device coating assembly of claim **9**, wherein the controller is further configured to cause the first actuator to adjust the rotational speed of the substrate support in order to cause different portions of an edge of an irregularly shaped optical device substrate positioned on the substrate support to rotate against a coating applicator in the holder at the constant linear speed.

14. The optical device coating assembly of claim **13**, wherein the controller is configured adjust the rotational speed of the substrate support to cause all portions of the edges of the irregularly shaped optical device substrate positioned on the substrate support to rotate against the coating applicator in the holder at the constant linear speed as the substrate support is rotated 360 degrees.

15. The optical device coating assembly of claim **9**, wherein the second actuator is configured to cause an applicator positioned in the holder to apply a coating on an edge of the optical device substrate in the first position and the second position.

16. The optical device coating assembly of claim **9**, wherein the coating applicator is a marker, a pen, a marker pen, a sponge applicator, a foam applicator, or a rubber wheel.

* * * * *