US012153344B2

(12) **United States Patent**
Xu et al.

(10) **Patent No.: US 12,153,344 B2**
(45) **Date of Patent: *Nov. 26, 2024**

(54) **LITHOGRAPHY METHOD TO FORM STRUCTURES WITH SLANTED ANGLE**

(71) Applicant: **Applied Materials, Inc.**, Santa Clara, CA (US)

(72) Inventors: **Yongan Xu**, Santa Clara, CA (US); **Jinxin Fu**, Fremont, CA (US); **Jhenghan Yang**, San Jose, CA (US); **Ludovic Godet**, Sunnyvale, CA (US)

(73) Assignee: **APPLIED MATERIALS, INC.**, Santa Clara, CA (US)

(*) Notice: Subject to any disclaimer, the term of this patent is extended or adjusted under 35 U.S.C. 154(b) by 0 days.

This patent is subject to a terminal disclaimer.

(21) Appl. No.: **18/241,705**

(22) Filed: **Sep. 1, 2023**

(65) **Prior Publication Data**

US 2023/0408913 A1 Dec. 21, 2023

Related U.S. Application Data

(63) Continuation of application No. 17/534,128, filed on Nov. 23, 2021, now Pat. No. 11,754,919.
(Continued)

(51) **Int. Cl.**
G03F 7/00 (2006.01)
G02B 6/122 (2006.01)
(Continued)

(52) **U.S. Cl.**
CPC ***G03F 7/0007*** (2013.01); ***G02B 6/122*** (2013.01); ***G02B 6/136*** (2013.01)

(58) **Field of Classification Search**
None
See application file for complete search history.

(56) **References Cited**

U.S. PATENT DOCUMENTS

6,692,902 B2 2/2004 Wong et al.
10,775,158 B2 9/2020 Olson et al.
(Continued)

FOREIGN PATENT DOCUMENTS

JP 2006058334 A 3/2006

OTHER PUBLICATIONS

International Search Report and Written Opinion dated Mar. 16, 2022 for Application No. PCT/US2021/060520.

Primary Examiner — Shamim Ahmed
(74) *Attorney, Agent, or Firm* — Patterson + Sheridan, LLP

(57) **ABSTRACT**

The present disclosure generally relates to methods of forming optical devices comprising nanostructures disposed on transparent substrates. A first process of forming the nanostructures comprises depositing a first layer of a first material on a glass substrate, forming one or more trenches in the first layer, and depositing a second layer of a second material in the one or more holes to trenches a first alternating layer of alternating first portions of the first material and second portions of the second material. The first process is repeated one or more times to form additional alternating layers over the first alternating layer. Each first portion of each alternating layer is disposed in contact with and offset a distance from an adjacent first portion in adjacent alternating layers. A second process comprises removing either the first or the second portions from each alternating layer to form the plurality of nanostructures.

20 Claims, 7 Drawing Sheets

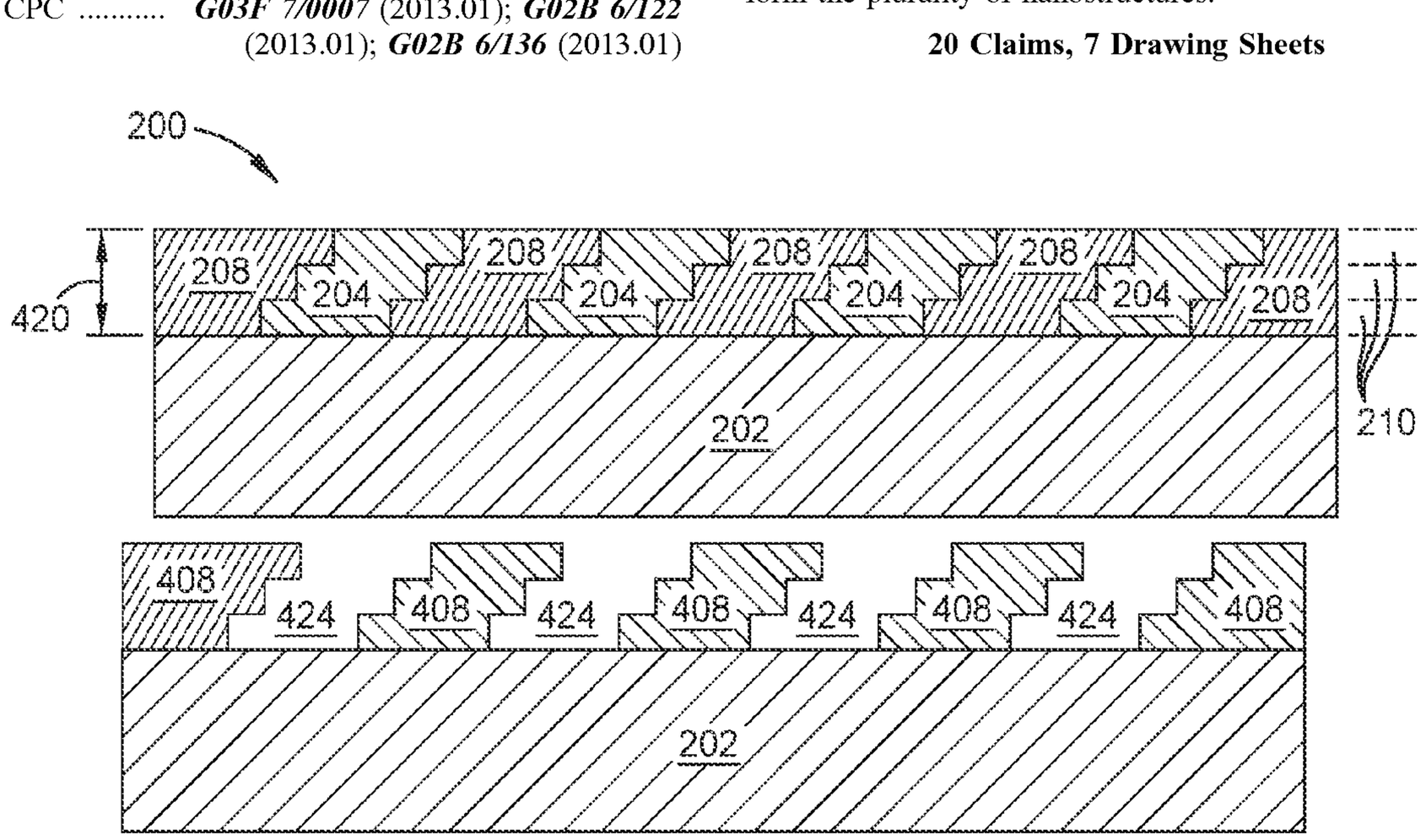

Related U.S. Application Data

(60) Provisional application No. 63/119,497, filed on Nov. 30, 2020.

(51) **Int. Cl.**
G02B 6/136 (2006.01)
H01L 21/3065 (2006.01)

(56) **References Cited**

U.S. PATENT DOCUMENTS

11,247,298	B2	2/2022	Evans et al.	
11,754,919	B2 *	9/2023	Xu	G02B 6/122 216/24
2002/0151178	A1	8/2002	Lai	
2002/0135717	A1	9/2002	Liu	
2004/0082178	A1 *	4/2004	Kamins	C30B 11/00 438/691
2007/0003839	A1	1/2007	Rabarot et al.	
2011/0279818	A1	11/2011	Amako et al.	
2016/0035539	A1	2/2016	Sainiemi et al.	
2018/0081265	A1	3/2018	Singh	
2020/0301062	A1	9/2020	Young et al.	
2020/0409151	A1	12/2020	Calafiore	

* cited by examiner

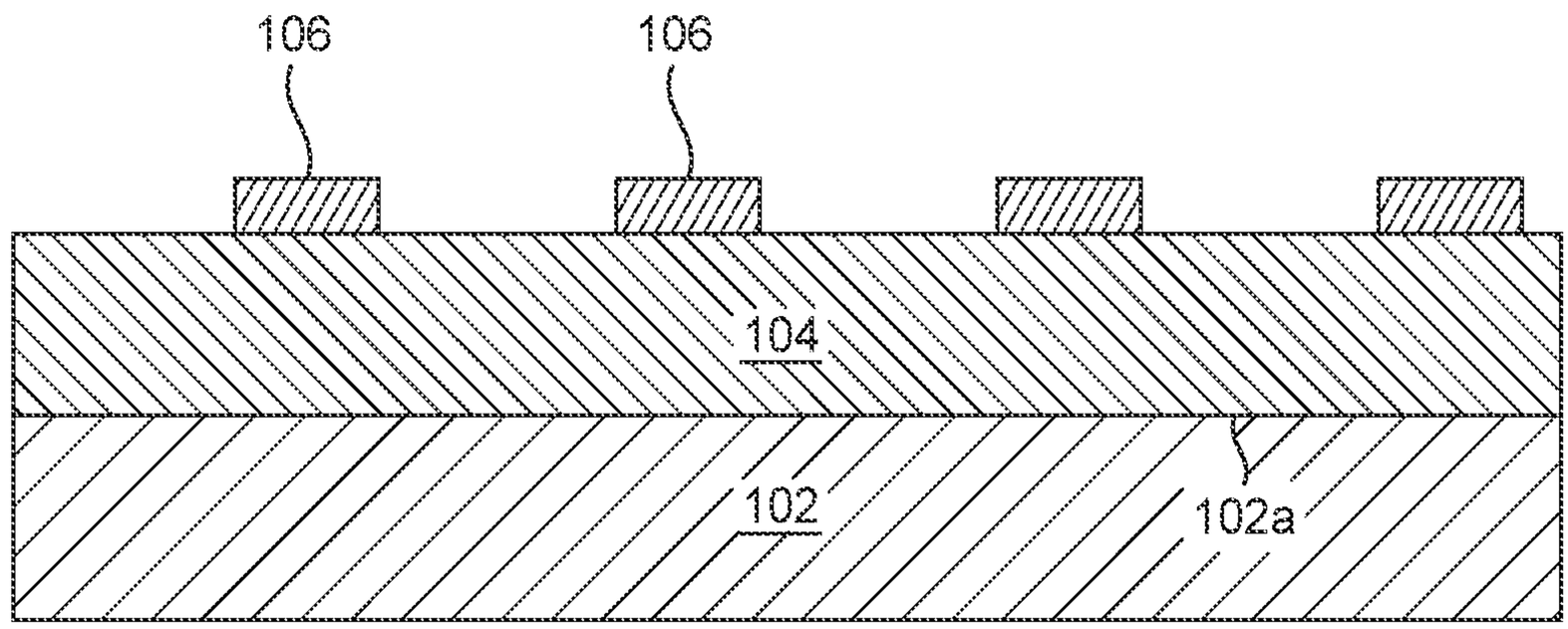

FIG. 1A
(PRIOR ART)

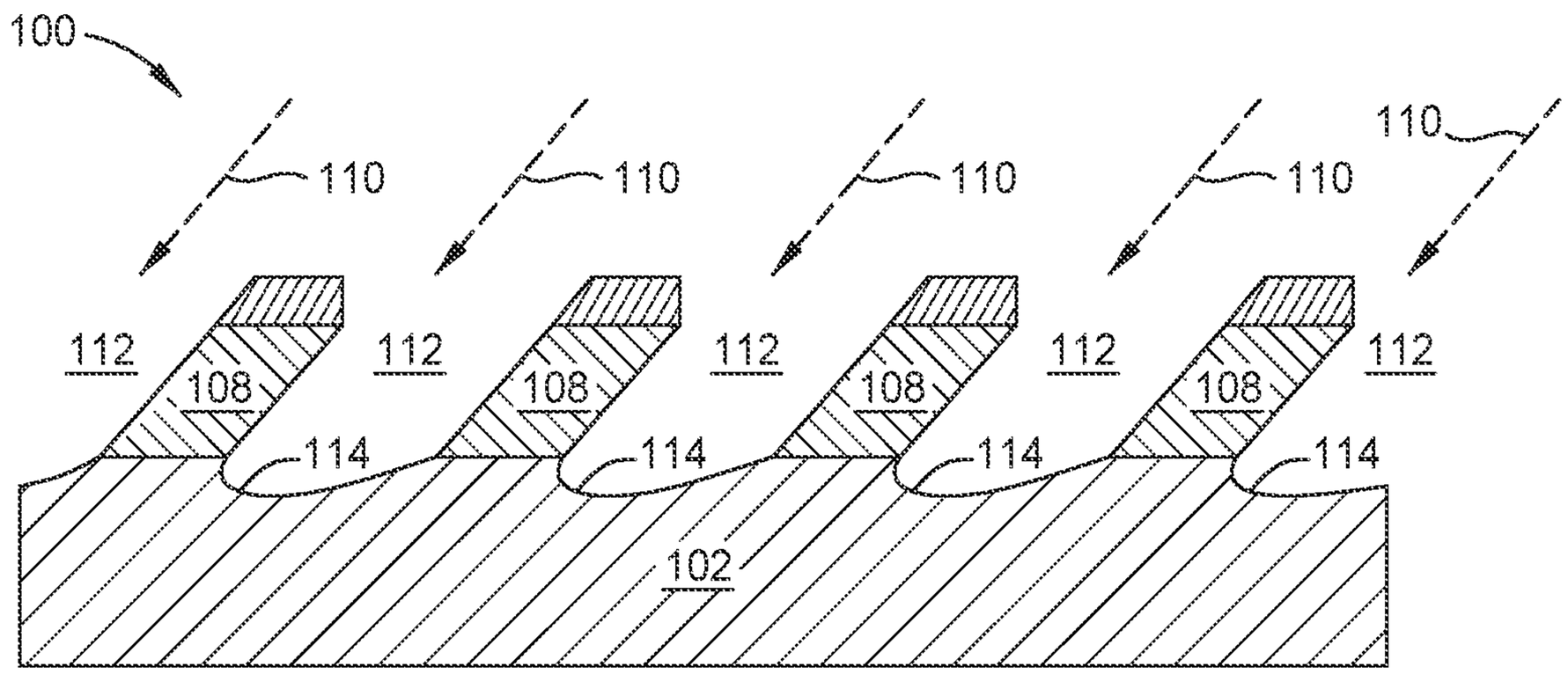

FIG. 1B
(PRIOR ART)

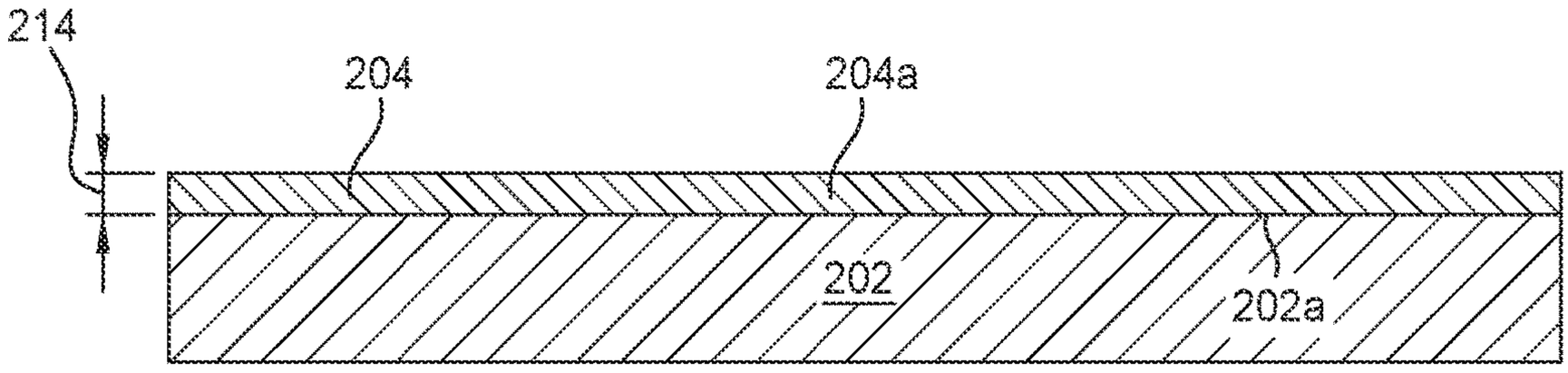

FIG. 2A

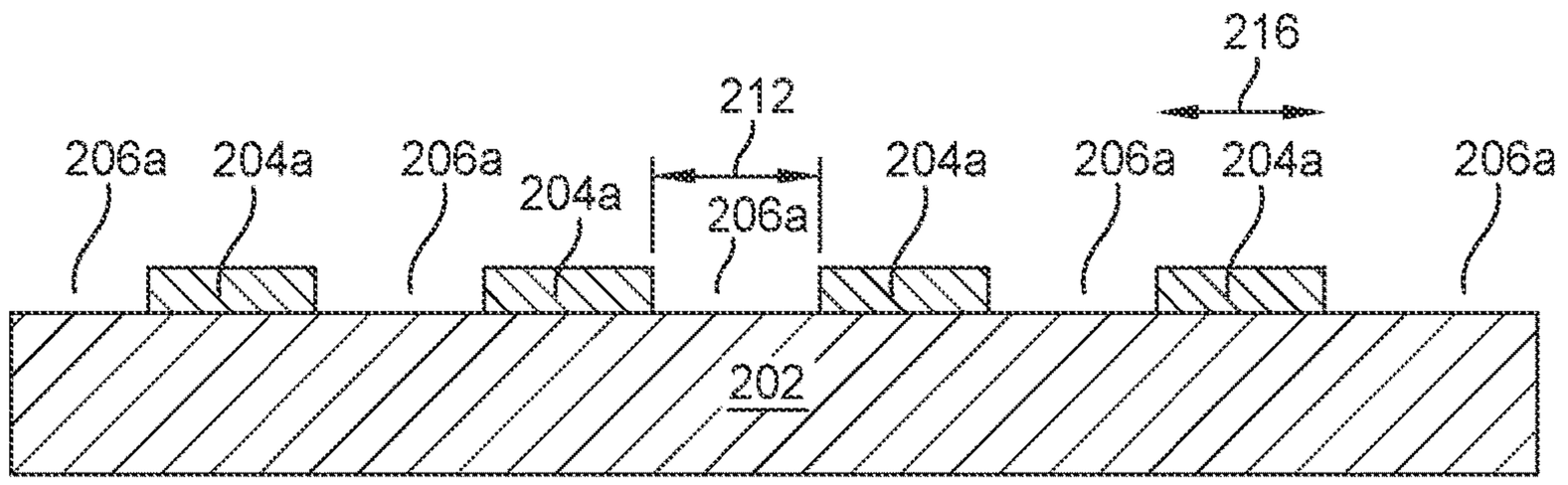

FIG. 2B

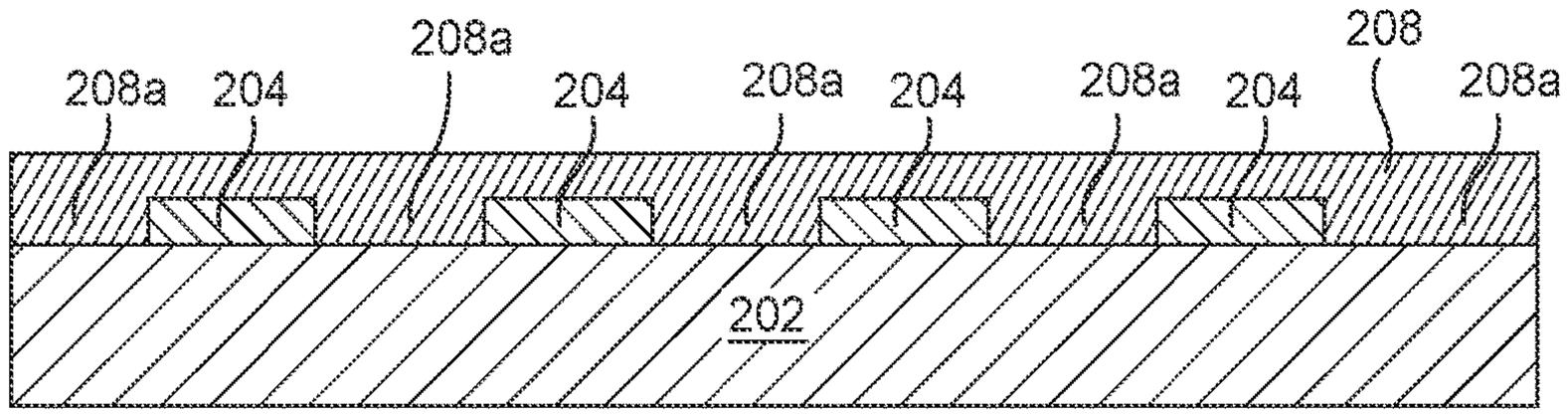

FIG. 2C

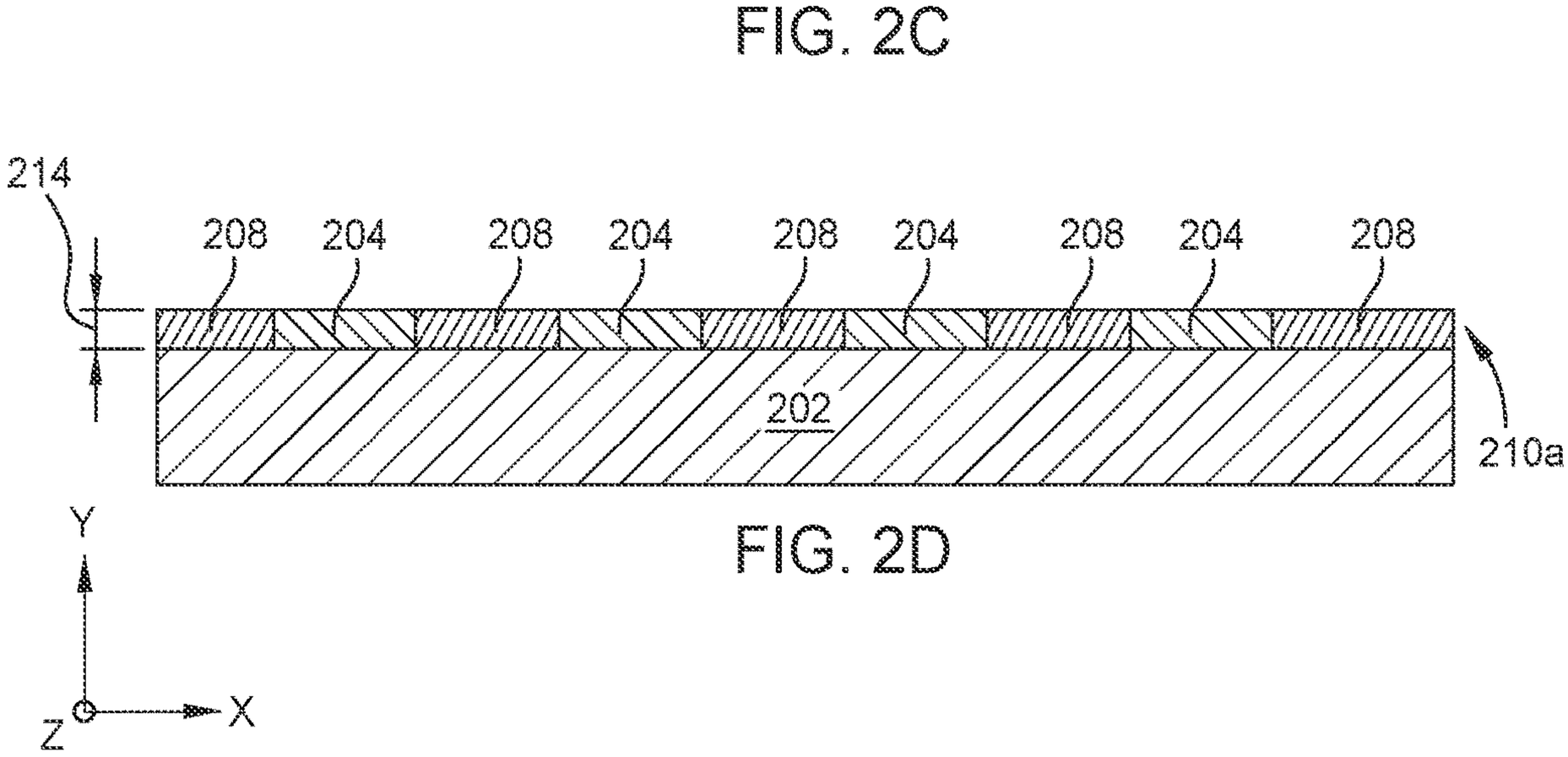

FIG. 2D

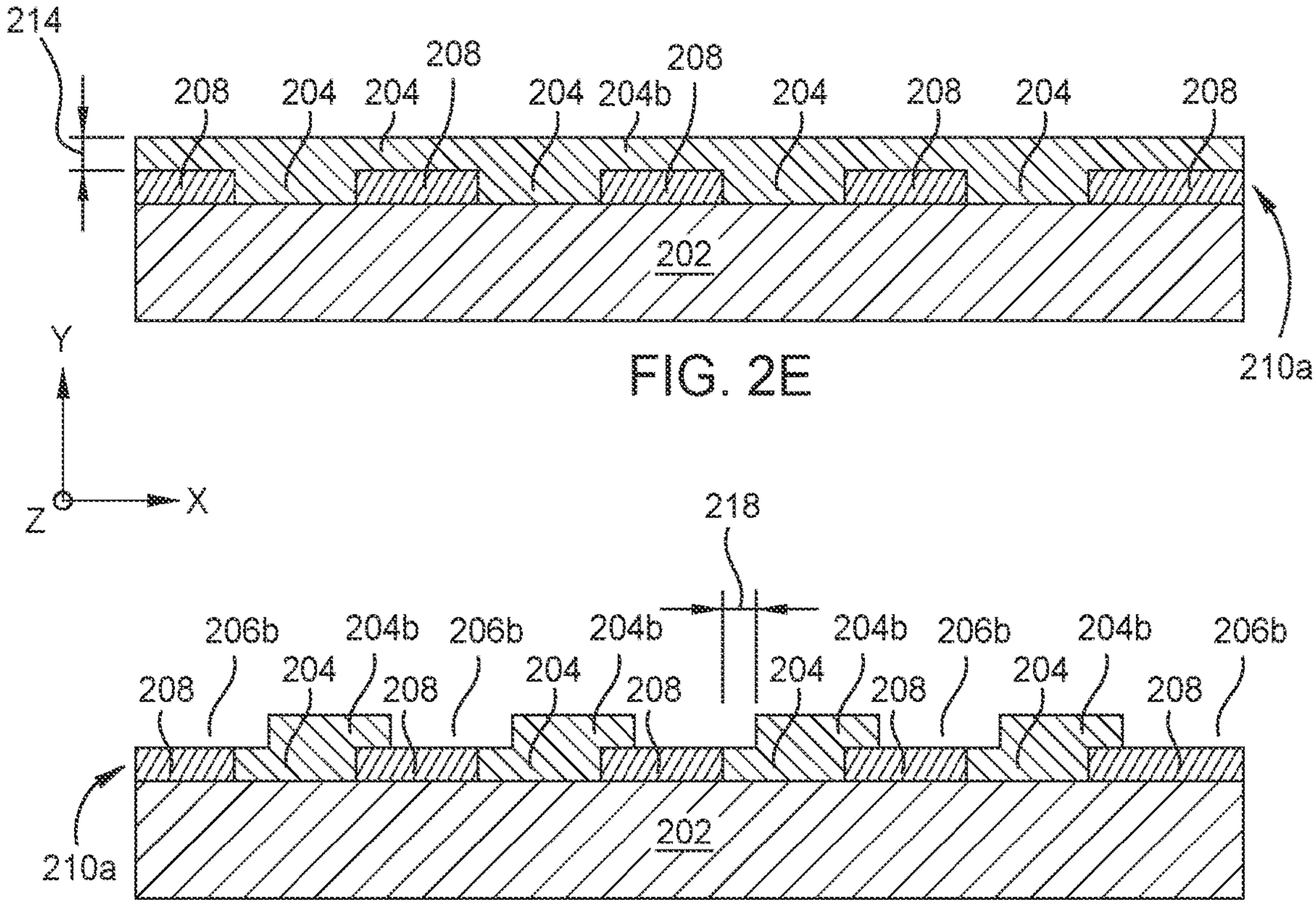

FIG. 2E

FIG. 2F

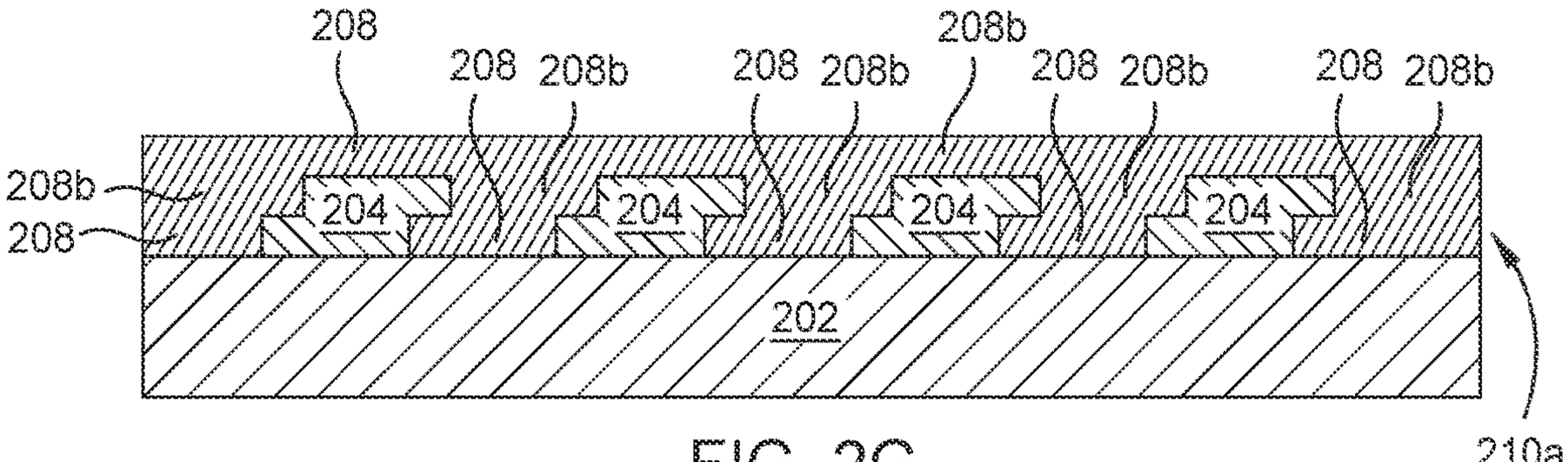

FIG. 2G

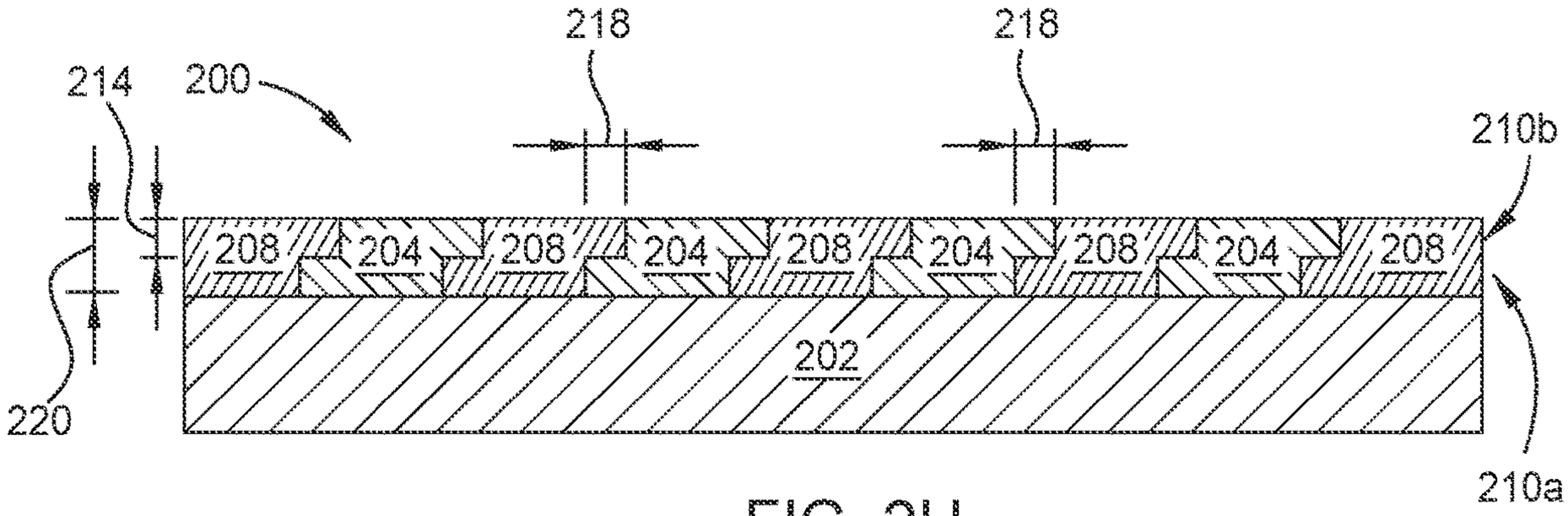

FIG. 2H

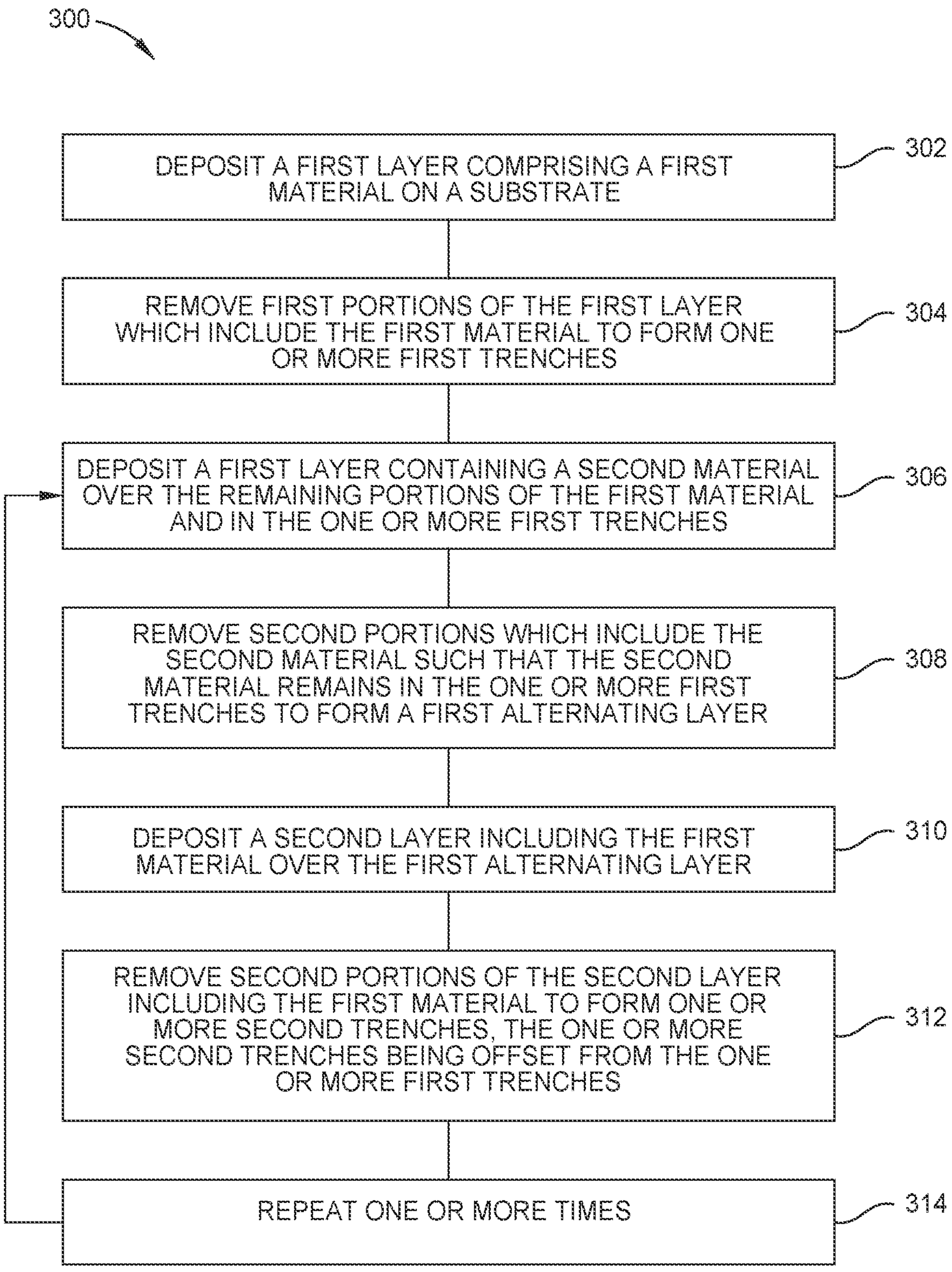
300
DEPOSIT A FIRST LAYER COMPRISING A FIRST MATERIAL ON A SUBSTRATE
302
REMOVE FIRST PORTIONS OF THE FIRST LAYER WHICH INCLUDE THE FIRST MATERIAL TO FORM ONE OR MORE FIRST TRENCHES
304
DEPOSIT A FIRST LAYER CONTAINING A SECOND MATERIAL OVER THE REMAINING PORTIONS OF THE FIRST MATERIAL AND IN THE ONE OR MORE FIRST TRENCHES
306
REMOVE SECOND PORTIONS WHICH INCLUDE THE SECOND MATERIAL SUCH THAT THE SECOND MATERIAL REMAINS IN THE ONE OR MORE FIRST TRENCHES TO FORM A FIRST ALTERNATING LAYER
308
DEPOSIT A SECOND LAYER INCLUDING THE FIRST MATERIAL OVER THE FIRST ALTERNATING LAYER
310
REMOVE SECOND PORTIONS OF THE SECOND LAYER INCLUDING THE FIRST MATERIAL TO FORM ONE OR MORE SECOND TRENCHES, THE ONE OR MORE SECOND TRENCHES BEING OFFSET FROM THE ONE OR MORE FIRST TRENCHES
312
REPEAT ONE OR MORE TIMES
314

FIG. 3

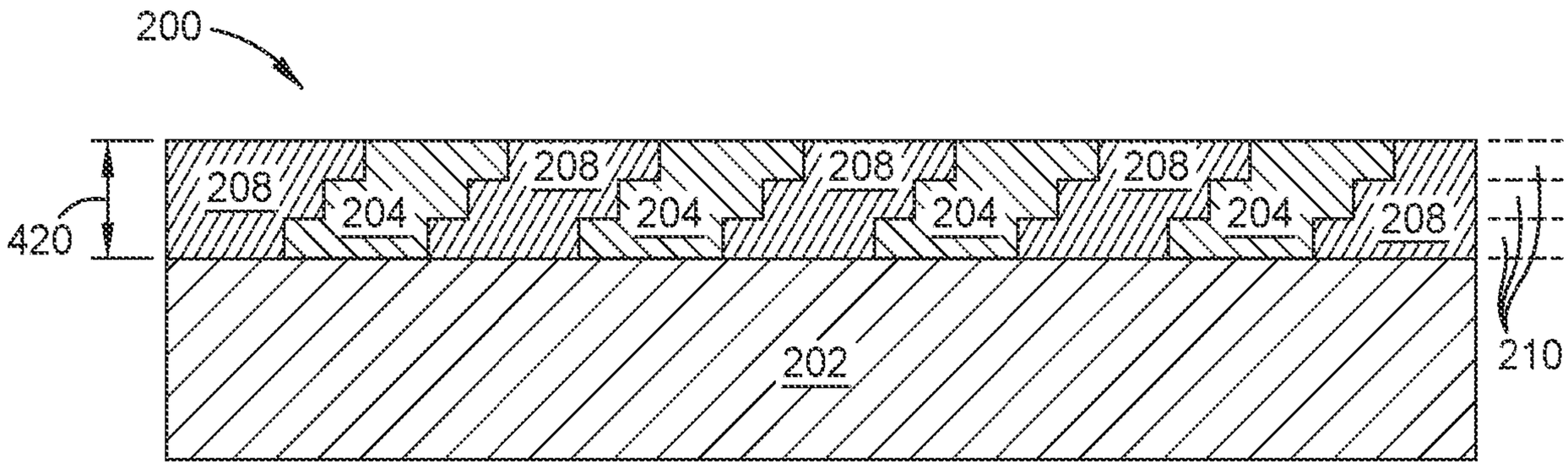

FIG. 4A

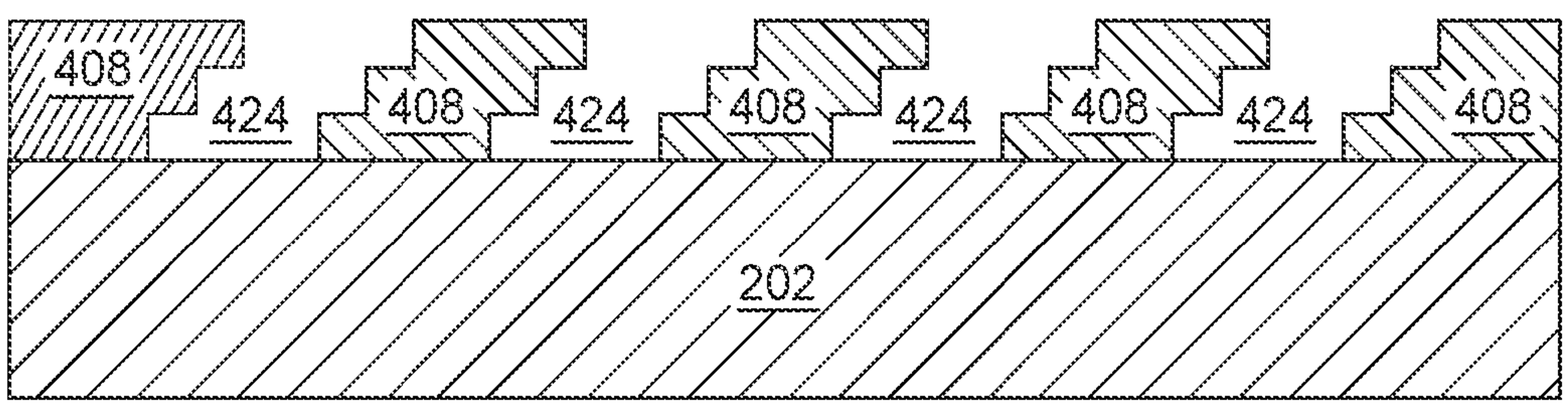

FIG. 4B

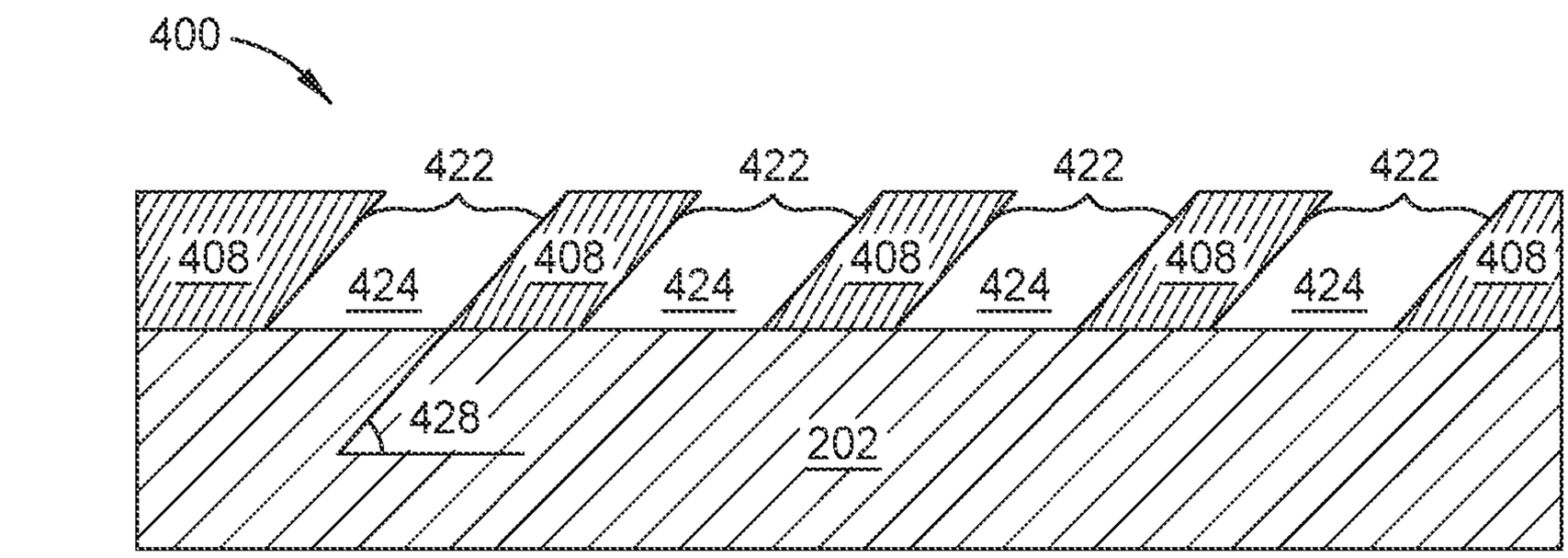

FIG. 4C

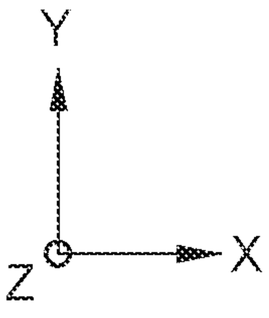

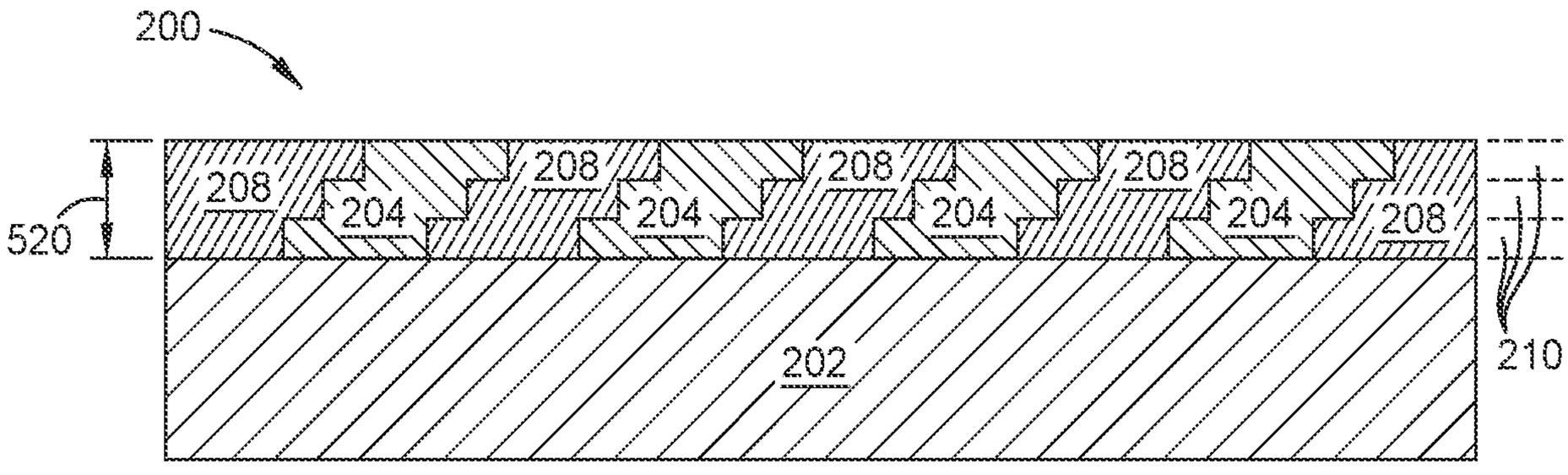

FIG. 5A

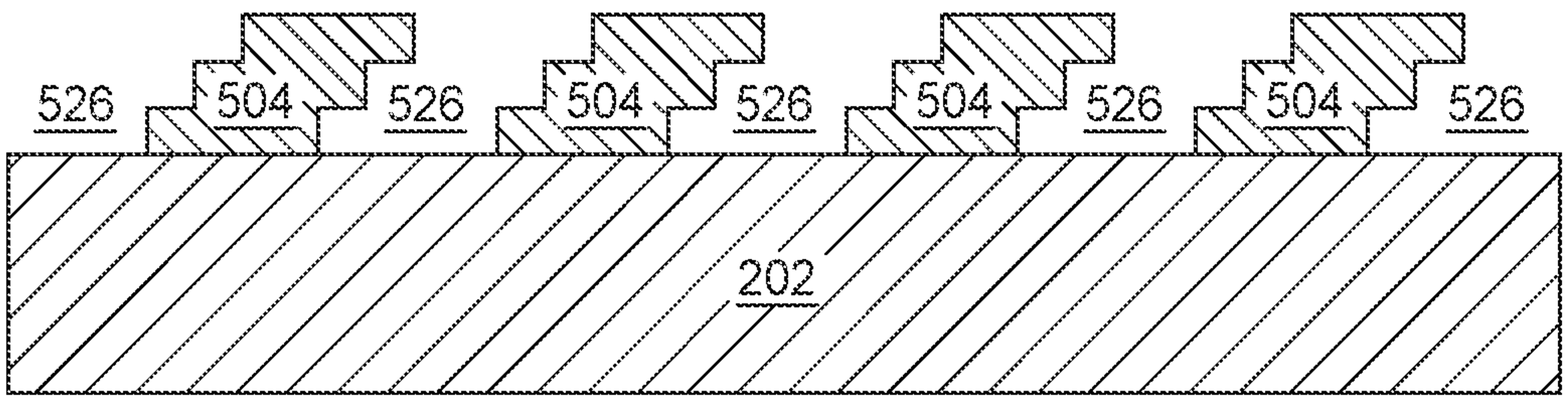

FIG. 5B

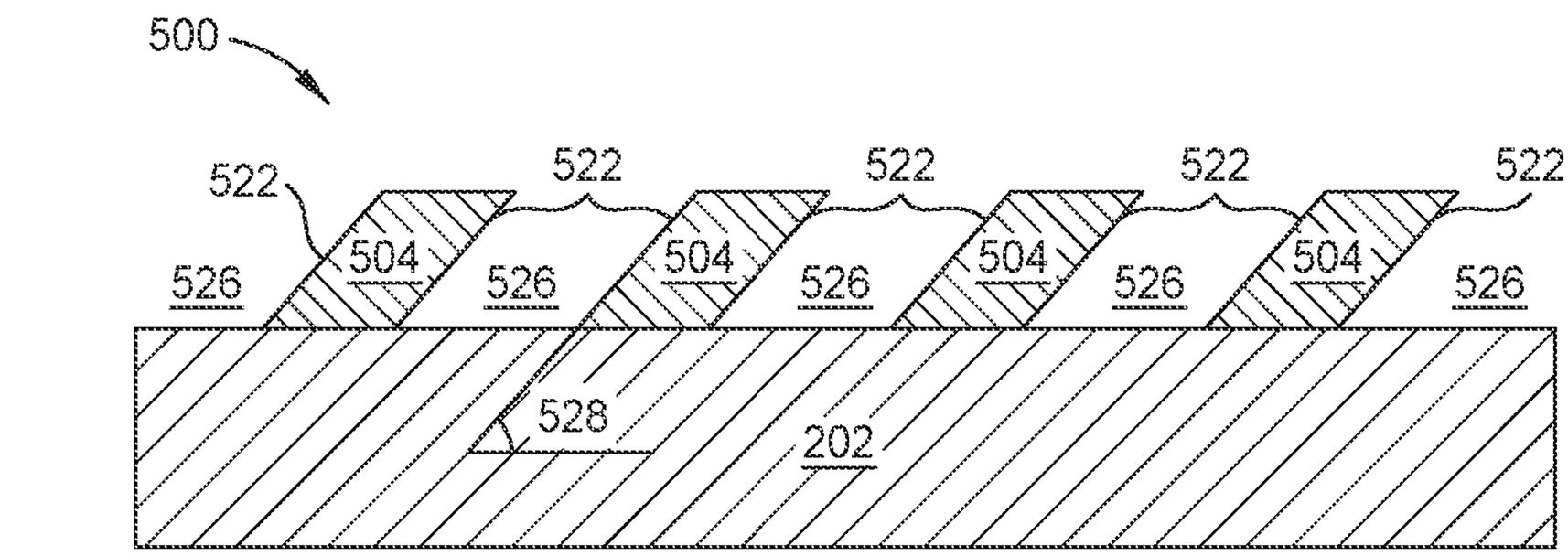

FIG. 5C

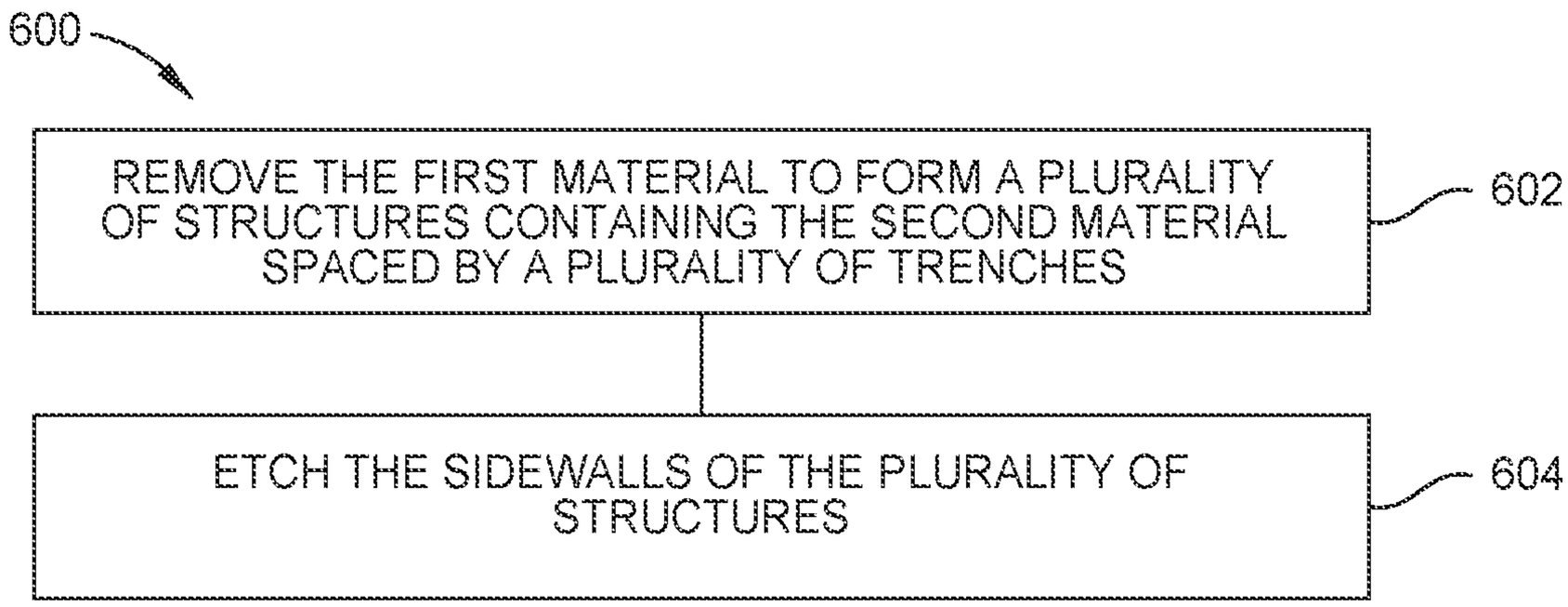
600
REMOVE THE FIRST MATERIAL TO FORM A PLURALITY OF STRUCTURES CONTAINING THE SECOND MATERIAL SPACED BY A PLURALITY OF TRENCHES
602
ETCH THE SIDEWALLS OF THE PLURALITY OF STRUCTURES
604

FIG. 6A

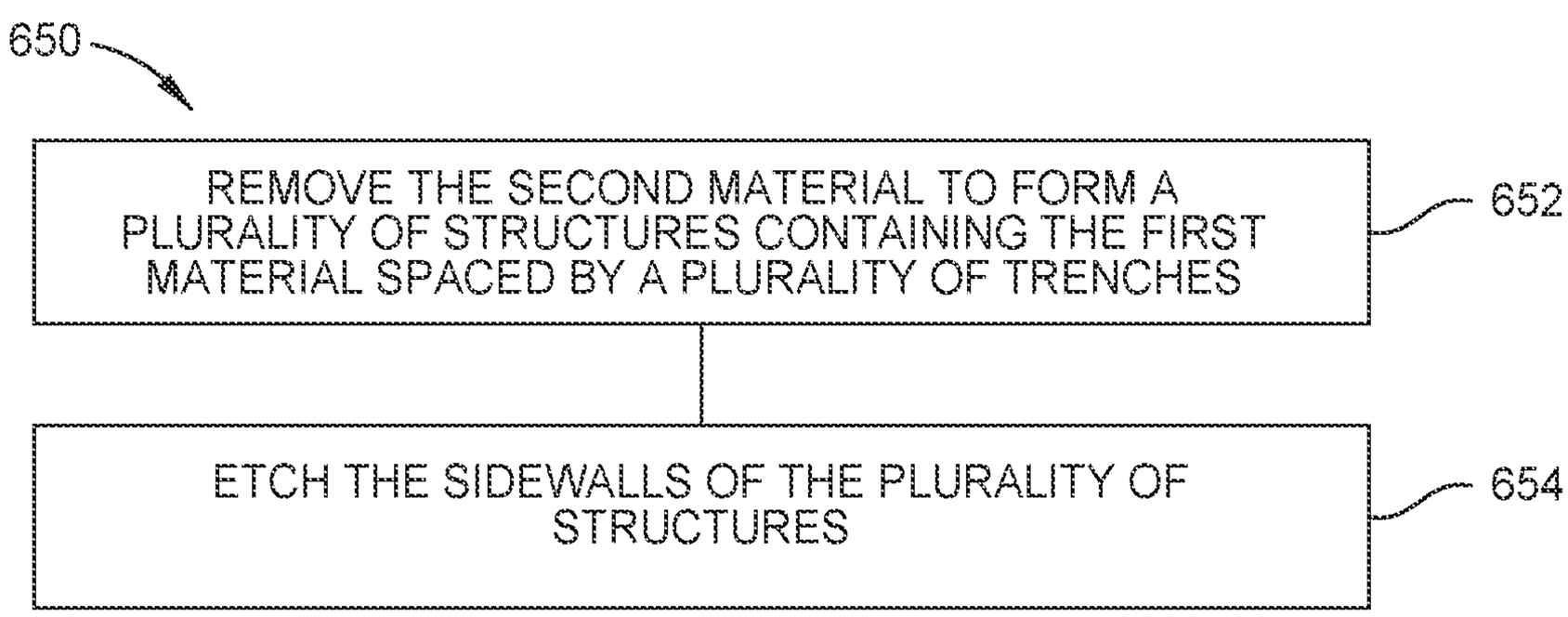
650
REMOVE THE SECOND MATERIAL TO FORM A PLURALITY OF STRUCTURES CONTAINING THE FIRST MATERIAL SPACED BY A PLURALITY OF TRENCHES
652
ETCH THE SIDEWALLS OF THE PLURALITY OF STRUCTURES
654

FIG. 6B

LITHOGRAPHY METHOD TO FORM STRUCTURES WITH SLANTED ANGLE

CROSS-REFERENCE TO RELATED APPLICATIONS

This application is a continuation of U.S. patent application Ser. No. 17/534,128, filed Nov. 23, 2021, which claims benefit of U.S. provisional patent application No. 63/119,497, filed Nov. 30, 2020, which are both herein incorporated by reference in their entireties.

BACKGROUND

Field

Embodiments of the present disclosure generally relate to methods of forming optical devices comprising nanostructures disposed on transparent substrates.

Description of the Related Art

Virtual reality is generally considered to be a computer-generated simulated environment in which a user has an apparent physical presence. A virtual reality experience can be generated in 3D and viewed with a head-mounted display (HMD), such as glasses or other wearable display devices that have near-eye display panels, such as lenses, to display a virtual reality environment that replaces an actual environment.

Augmented reality also enables an experience in which a user can see through the display lenses of the glasses or other HMD device to view the surrounding environment, but also enables the user to see images of virtual objects that are generated for display and appear as part of the environment. Augmented reality can include any type of input, such as audio and haptic inputs, as well as visual images, graphics, and video that enhances or augments the real environment that the user experiences. As an emerging technology, there are many challenges and design constraints with augmented reality.

One such challenge is displaying a virtual image overlaid on an ambient environment. Waveguides comprising a plurality of nanostructures are used to assist in overlaying images. Generated light is propagated through a waveguide until the light exits the waveguide and is overlaid on the ambient environment. Due to the size of the plurality of nanostructures, the formation process can be difficult to accurately control. FIGS. **1**A-**1**B illustrate a conventional method of forming a plurality of nanostructures **108** of a waveguide **100**, according to one embodiment. In FIG. **1**A, a first material **104** is deposited on a top surface **102***a* of the substrate **102**. A patterned hard mask **106** is deposited on the first material **104**.

In FIG. **1**B, portions **112** of the first material **104** uncovered by the hard mask **106** are removed or etched using ion beams **110** to form a plurality of slanted nanostructures **108**. As used herein, slanted refers to an angle offset from both the x-axis and the y-axis, such as being angled in the xy-direction. In other words, the plurality of slanted nanostructures **108** are neither parallel nor perpendicular to the top surface **102***a* of the substrate. The slanted profile of the plurality of nanostructures **108** is controlled by the angle of ion beams **110**, which is difficult to control and often requires over-etching in order to ensure each nanostructure **108** has a consistent thickness or width in the x-direction throughout. As such, the over-etching may cause portions **114** of the substrate **102** to be inadvertently removed.

Therefore, there is a need in the art for an improved method of forming nanostructures.

SUMMARY

The present disclosure generally relates to methods of forming optical devices comprising nanostructures disposed on transparent substrates. A first process of forming the nanostructures comprises depositing a first layer of a first material on a glass substrate, forming one or more trenches in the first layer, and depositing a second layer of a second material in the one or more trenches to form a first alternating layer of alternating first portions of the first material and second portions of the second material. The first process is repeated one or more times to form additional alternating layers over the first alternating layer. Each first portion of each alternating layer is disposed in contact with and offset a distance from an adjacent first portion in adjacent alternating layers. A second process comprises removing either the first or the second portions from each alternating layer to form the plurality of nanostructures.

A method of forming a plurality of slanted nanostructures using a lithography tool comprises performing a first process comprising: depositing a first layer of a first material on a first surface of a transparent substrate, removing one or more first portions of the first layer of the first material to form one or more trenches, and depositing a first layer of a second material in the one or more trenches to form a first alternating layer comprising alternating first remaining portions of the first material disposed in contact with second remaining portions of the second material, the second material being different than the first material. The method further comprises repeating the first process one or more times to form one or more additional alternating layers over the first alternating layer, wherein each first remaining portion of each alternating layer is disposed in contact with and offset a first distance from an adjacent first remaining portion in adjacent alternating layers. The method further comprises performing a second process comprising: removing each second remaining portion from each alternating layer, and etching sidewalls of each first remaining portion to smooth the sidewalls to form the plurality of slanted nanostructures comprising the first material, wherein each of the plurality of slanted nanostructures is disposed at an angle from 0° to about 90° from the first surface of the transparent substrate.

A method of forming a plurality of slanted nanostructures using a lithography tool comprises performing a first process comprising: depositing a first layer of a first material on a transparent substrate, removing one or more first portions of the first layer of the first material to form one or more trenches, depositing a first layer of a second material over the first material and in the one or more trenches, the second material being different than the first material, and etching and planarizing the first layer of the second material to form a first alternating layer comprising first remaining portions of the first material disposed in contact with second remaining portions of the second material, the first alternating layer having a thickness from about 10 nm to about 100 μm. The method further comprises repeating the first process one or more times to form one or more additional alternating layers over the first alternating layer, wherein each second remaining portion of each alternating layer is disposed in contact with and offset a first distance from an adjacent second remaining portion in adjacent alternating layers. The method further comprises performing a second process comprising:

removing each first remaining portion from each alternating layer, and etching sidewalls of each second remaining portion to form the plurality of slanted nanostructures comprising the second material.

A method of forming a plurality of slanted nanostructures using a lithography tool comprises performing a first process comprising: depositing a first layer of a first material on a first surface of a transparent substrate, the first material comprising Ti, Sb, Sn, Zr, Al, or Hf, removing one or more first portions of the first layer of the first material to form one or more trenches, and depositing a first layer of a second material in the one or more trenches to form a first alternating layer comprising alternating first remaining portions of the first material disposed in contact with second remaining portions of the second material, the second material comprising an organic planarization layer, spin on glass, SiN, or a Si containing material. The method further comprises repeating the first process one or more times to form one or more additional alternating layers over the first alternating layer, wherein each first remaining portion of each alternating layer is disposed in contact with and offset a first distance from an adjacent first remaining portion in adjacent alternating layers, and wherein each first remaining portions has a first width, the first width being greater than the first distance. The method further comprises performing a second process comprising: removing either each first remaining portion or each second remaining portion from each alternating layer to form the plurality of slanted nanostructures, and etching sidewalls of each of the plurality of slanted nanostructures to smooth the sidewalls.

BRIEF DESCRIPTION OF THE DRAWINGS

So that the manner in which the above recited features of the present disclosure can be understood in detail, a more particular description of the disclosure, briefly summarized above, may be had by reference to embodiments, some of which are illustrated in the appended drawings. It is to be noted, however, that the appended drawings illustrate only exemplary embodiments and are therefore not to be considered limiting of its scope, and may admit to other equally effective embodiments.

FIGS. **1**A-**1**B illustrate a conventional method of forming a plurality of nanostructures of a waveguide, according to one embodiment.

FIGS. **2**A-**2**H illustrate various views of forming a nanostructure base, according to disclosed embodiments.

FIG. **3** illustrates a method of forming the nanostructure base of FIGS. **2**A-**2**H, according to one embodiment.

FIGS. **4**A-**4**C illustrate various views of forming a nanostructure from the nanostructure base of FIGS. **2**A-**2**H, according to disclosed embodiments.

FIGS. **5**A-**5**C illustrate various views of forming a nanostructure from the nanostructure base of FIGS. **2**A-**2**H, according to disclosed embodiments.

FIG. **6**A illustrates a method of forming the nanostructure of FIGS. **4**A-**4**C, according to one embodiment.

FIG. **6**B illustrates a method of forming the nanostructure of FIGS. **5**A-**5**C, according to one embodiment.

To facilitate understanding, identical reference numerals have been used, where possible, to designate identical elements that are common to the figures. It is contemplated that elements and features of one embodiment may be beneficially incorporated in other embodiments without further recitation.

DETAILED DESCRIPTION

In the following, reference is made to embodiments of the disclosure. However, it should be understood that the disclosure is not limited to specific described embodiments. Instead, any combination of the following features, elements, and embodiments, is contemplated to implement and practice the disclosure. Furthermore, although embodiments of the disclosure may achieve advantages over other possible solutions and/or over the prior art, whether or not a particular advantage is achieved by a given embodiment is not limiting of the disclosure. Thus, the following aspects, features, embodiments and advantages are merely illustrative and are not considered elements or limitations of the appended claims except where explicitly recited in a claim(s). Likewise, reference to "the disclosure" shall not be construed as a generalization of any inventive subject matter disclosed herein and shall not be considered to be an element or limitation of the appended claims except where explicitly recited in a claim(s).

The present disclosure generally relates to methods of forming optical devices comprising nanostructures disposed on transparent substrates. A first process of forming the nanostructures comprises depositing a first layer containing a first material on a glass substrate, forming one or more trenches in the first layer, and depositing a second layer containing a second material in the one or more trenches to form a first alternating layer, the first alternating layer containing first portions including the first material and second portions including the second material. The first process is repeated one or more times to form additional alternating layers over the first alternating layer. Each first portion of each alternating layer is disposed in contact with and offset a distance from an adjacent first portion in adjacent alternating layers. A second process includes removing either the first or the second portions from each alternating layer to form the plurality of nanostructures.

FIGS. **2**A-**2**H illustrate various views of forming a nanostructure base **200**, or a first process in forming a plurality of nanostructures, according to disclosed embodiments. The nanostructure base **200** will be used to form a nanostructure comprising a plurality of slanted structures, such as a waveguide, as described further below in FIGS. **4**A-**6**B. FIG. **3** illustrates a method **300** of forming the nanostructure base **200**, or the first process in forming the plurality of nanostructures, according to one embodiment. Thus, FIGS. **2**A-**2**H are described with FIG. **3**. The method **300** is performed using a lithography tool. For example, lithography tools that may be used include g-line, h-line, i-line, 248 nm, 193 nm, 193 nm immersion (193i), Talbot Lithography, or extreme ultraviolet lithography (EUV).

In operation **302**, a first layer **204***a* containing a first material **204** is deposited on a first surface **202***a* of a transparent substrate **202**, as shown in FIG. **2**A. The first layer **204***a* may be deposited using the lithography tool. In some embodiments, the first material **204** includes a metal. For example, the first material **204** may include Ti, Sb, Sn, Zr, Al, or Hf, among others. The first layer **204***a* has a first thickness **214** in the y-direction from about 10 nm to about 100 μm, such as from about 30 nm to about 500 nm. For example, the first thickness **214** may be from about 10 nm to about 1 μm when utilizing EUV, 193, and 193i lithography tools, or from about 100 nm to about 100 μm when utilizing g-line, h-line, and i-line lithography tools, such as from about 100 nm to about 5 μm. In some embodiments, the substrate **202** includes glass.

In operation **304**, first portions of the first layer **204***a* which include the first material **204** are removed to form one or more first trenches **206***a*, as shown in FIG. **2**B. The first portions of the first layer **204***a* may be removed to form the one or more first trenches **206***a* through lithography pattern-

ing of the lithography tool. Each of the first trenches **206***a* have a same width **212** in the x-direction. Similarly, each remaining portion of the first material **204** has a same width **216** in the x-direction. The width **212** and the width **216** may each individually be from about 20 nm to about 5,000 nm. As such, each remaining portion of the first material **204** is spaced a same distance apart in the x-direction, the distance being equal to the width **212** of the first trenches **206***a*. In some embodiments, the width **212** of the first trenches **206***a* is equal to the width **216** of the remaining portions of the first material **204**. While five first trenches **206***a* are shown, any number of first trenches **206***a* may be formed, and the number of first trenches **206***a* is not intended to be limiting.

In operation **306**, a first layer **208***a* containing a second material **208** is deposited over the remaining portions of the first material **204** and in the one or more first trenches **206***a*, as shown in FIG. **2**C. The second material **208** may be an organic planarization layer (OPL), spin on glass, SiN, or other Si containing materials, among others. In some embodiments, the first material **204** comprises OPL, spin on glass, SiN, or other Si containing materials, and the second material **208** comprises Ti, Sb, Sn, Zr, Al, or Hf. In operation **308**, a top portion of the first layer **208***a* containing the second material **208** is removed through planarization and etching such that the second material **208** remains in the one or more first trenches **206***a* to form a first alternating layer **210***a* having a first thickness **214**, as shown in FIG. **2**D.

In operation **310**, a second layer **204***b* of the first material **204** is deposited over the first alternating layer **210** using the lithography tool, as shown in FIG. **2**E. In some embodiments, the second layer **204***b* has the same thickness **214** as the first layer **204***a*. However, the second layer **204***b* may have a different thickness than the first layer **204***a*. In operation **312**, second portions of the second layer **204***b* which include the first material **204** are removed to form one or more second trenches **206***b* through lithography patterning of the lithography tool, as shown in FIG. **2**F. The second portions of the second layer **204***b* may be removed to form the one or more second trenches **206***b* through lithography patterning, as described above in operation **304**. The same number of first trenches **206***a* and the same number of second trenches **206***b* may be formed.

Each of the one or more second trenches **206***b* is offset a first distance **218** in the x-direction from the one or more first trenches **206***a*, now filled with the second material **208**. As such, the first material **204** of the first alternating layer **210***a* is offset the first distance **218** in the x-direction from the remaining portion of the second layer **204***b* of the first material **204** while still maintaining contact. The first distance **218** is from about 1 nm to about 5 μm. For example, the first distance **218** is from about 10 nm to about 50 nm when utilizing **193** and **248** lithography tools (e.g., from about 10 nm to about 20 nm), from about 500 nm to about 5 μm when utilizing g-line, h-line, and i-line lithography tools, and from about 1 nm to about 50 nm when utilizing EUV and 193i lithography tools (e.g., from about 1 nm to about 5 nm). The first distance **218** does not exceed the width **216** of the portions containing the first material **204**. Due to the alignment capabilities of lithography tools, the alignment of the first distance **218**, or the alignment of the one or more second trenches **206***b* to the one or more first trenches **206***a*, is accurately controlled.

In operation **314**, operations **306-312** are repeated one or more times. Thus, as shown in FIG. **2**G, a second layer **208***b* including the second material **208** is deposited over the first alternating layer **210***a* and in the one or more second trenches **206***b*. A top portion of the second layer **208***b* containing the second material **208** is then removed through planarization and etching such that the second material **208** remains only in the one or more second trenches **206***b* to form a second alternating layer **210***b* having the first thickness **214**, as shown in FIG. **2**H.

By repeating operations **306-312** of the method **300** one or more times, additional alternating layers (collectively referred to as alternating layers **210**) containing the first material **204** and the second material **208** are formed, where the first material **204** of an alternating layer **210** is offset the first distance **218** in the x-direction with the first material **204** of the adjacent alternating layers **210**. Similarly, the second material **208** of an alternating layer **210** is offset the first distance **218** in the x-direction with the second material **208** of the adjacent alternating layers **210**. Each alternating layer **210** has a planar surface substantially parallel to the first surface **202***a* of the substrate **202**. Once all of alternating layers **210** collectively reach a desired height **220** in the y-direction, the nanostructure base **200** is complete and the method **300** ends.

As used herein, the first distance **218** may be used interchangeably with an offset distance **218**, which refers to the distance each portion containing the first material **204** in an alternating layer **210** is offset from adjacent portions containing the first material **204** in adjacent alternating layers **210** and the distance each portion containing the second material **208** in an alternating layer **210** is offset from adjacent portions containing the second material **208** in adjacent alternating layers **210**. As noted above, the offset distance **218** cannot exceed the width of each portion containing the first material **204** or each portion containing the second material **208**, as adjacent portions containing the first material **204** in adjacent alternating layers **210** are in contact with one another, and adjacent portions containing the second material **208** in adjacent alternating layers **210** are in contact with one another.

FIGS. **4**A-**4**C illustrate various views of forming a nanostructure **400** from the nanostructure base **200** of FIGS. **2**A-**2**H, or a second process in forming the plurality of nanostructures, according to embodiments. The nanostructure **400** may be a waveguide. FIGS. **5**A-**5**C illustrate various views of forming a nanostructure **500** from the nanostructure base **200** of FIGS. **2**A-**2**H, or an alternate second process in forming the plurality of nanostructures, according to embodiments. The nanostructure **500** may be a waveguide. FIG. **6**A illustrates a method **600** of forming the nanostructure **400** of FIGS. **4**A-**4**C, according to some embodiments. FIG. **6**B illustrates a method **650** of forming the nanostructure **500** of FIGS. **5**A-**5**C, according to some embodiments. Thus, FIGS. **4**A-**4**C are described with FIG. **6**A, and Figures are described with FIG. **6**B.

Method **300** may be used with both method **600** and method **650**. For example, upon completing method **300**, method **600** may then be used. For example, upon completing method **300**, method **650** may then be used. Methods **600** and **650** may each, individually, be performed using a lithography tool. For example, lithography tools that may be used include g-line, h-line, i-line, 248 nm, 193 nm, 193i, or EUV.

FIG. **4**A illustrates the nanostructure base **200** formed using the method **300** above. The nanostructure base **200** comprises a plurality of alternating layers **210** having a height **420** in the y-direction. The height **420** is from about 20 nm to about 1 μm. In some embodiments, the height **420** is from about 20 nm to about 2 μm. While three alternating layers **210** are shown, the nanostructure base **200** may have

any number of alternating layers **210**, and the number of alternating layers **210** is not intended to be limiting.

In operation **602** of method **600**, the first material **204** is removed to form a plurality of nanostructures **408** containing the second material **208**, as shown in FIG. **4**B. The plurality of nanostructures **408** are spaced by a plurality of trenches **424** where the first material **204** was previously disposed. In embodiments where the first material **204** comprises Ti, Sb, Sn, Zr, Al, or Hf, the first material **204** may be removed through oxide etching. The first material **204** is removed while still being disposed on the substrate **202**.

In operation **604**, the sidewalls **422** of the plurality of nanostructures **408** are etched such that the sidewalls **422** are substantially smooth or planar and are disposed at a slant angle **428**, as shown in FIG. **4**C. In embodiments where the second material **208** comprises OPL, spin on glass, SiN, or other Si containing materials, the sidewalls **422** may be etched using CH_3F, CH_4, CHF_3, CF_4, O_2, or Cl. The plurality of nanostructures **408** are etched while still being disposed on the substrate **202**. The etching of the sidewalls **422** is relatively minor, resulting in the total dielectric volume of each of the plurality of nanostructures **408** being substantially unaffected by the etching.

The slant angle **428** may be from 0° to about 90°. The slant angle **428** may be dependent based on the offset distance **218**, or the distance each second material **208** portion of an alternating layer **210** is offset from each second material **208** portion of an adjacent alternating layer **210**, as described above in FIGS. **2**A-**2**H. Since the offset distance **218** of each alternating layer **210** is accurately aligned due to being deposited by the lithography tool, the slant angle **428** can be accurately controlled.

FIG. **5**A illustrates the nanostructure base **200** formed using the method **300** above. The nanostructure base **200** comprises a plurality of alternating layers **210** having a height **520** in the y-direction. The height **520** is from about 20 nm to about 1 μm. In some embodiments, the height **520** is from about 20 nm to about 2 μm. The angle size **428** and **528** may determine the height **420** and **520**, respectively, by controlling the number of alternating layers **210**. While three alternating layers **210** are shown, the nanostructure base **200** may have any number of alternating layers **210**, and the number of alternating layers **210** is not intended to be limiting.

In operation **652** of method **650**, the second material **208** is removed to form a plurality of nanostructures **504** containing the first material **204**, as shown in FIG. **6**B. The plurality of nanostructures **504** are spaced by a plurality of trenches **526** where the second material **208** was previously disposed. In embodiments where the second material **208** comprises OPL, spin on glass, SiN, or other Si containing materials, the second material **208** may be removed through a SiN etch. The second material **208** is removed while still being disposed on the substrate **202**.

In operation **654**, the sidewalls **522** of the plurality of nanostructures **504** are etched such that the sidewalls **522** are substantially smooth or planar and are disposed at a slant angle **528**, as shown in FIG. **5**C. In embodiments where the first material **204** comprises Ti, Sb, Sn, Zr, Al, or Hf, the sidewalls **522** may be etched using CH_3F, CH_4, CHF_3, CF_4, or O_2. The plurality of nanostructures **504** are etched while still being disposed on the substrate **202**. The etching of the sidewalls **522** is relatively minor, resulting in the total dielectric volume of each of the plurality of nanostructures **504** being substantially unaffected by the etching.

The slant angle **528** may be from 0° to about 90°. The slant angle **528** may be dependent based on the offset distance **218**, or the distance each first material **204** portion of an alternating layer **210** is offset from each first material **204** portion of an adjacent alternating layer **210**, as described above in FIGS. **2**A-**2**H. Since the offset distance **218** of each alternating layer **210** is accurately aligned due to being deposited by the lithography tool, the slant angle **528** can be accurately controlled.

Thus, by utilizing a lithography tool, the plurality of slanted nanostructures can be patterned directly on a glass substrate, and the slanted angle of each of the plurality of slanted nanostructures can be accurately controlled. Similarly, due to the alignment capabilities of lithography tools, the alignment of the each portion of the first and second materials in each alternating layer is accurately controlled. Moreover, the above-described methods of forming the plurality of nanostructures can be utilized with a number of lithography tools, allowing for greater flexibility and lower costs to implement the methods.

While the foregoing is directed to embodiments of the present disclosure, other and further embodiments of the disclosure may be devised without departing from the basic scope thereof, and the scope thereof is determined by the claims that follow.

What is claimed is:

1. A method of forming a plurality of nanostructures using a lithography tool, comprising:

forming a first layer on a first surface of a transparent substrate, the first layer comprising first portions spaced from each other by one or more trenches, the first portions comprising a first material;

depositing a second layer comprising a second material in the one or more trenches to form a first alternating layer comprising alternating first portions comprising the first material disposed in contact with second portions comprising the second material, the second material different than the first material;

forming one or more additional alternating layers over the first alternating layer, each first portion of each alternating layer in contact with and offset from an adjacent first portion in adjacent alternating layers;

removing each second portion from each alternating layer; and

etching a sidewall of each first portion to smooth the sidewall and form the plurality of nanostructures comprising the first material.

2. The method of claim **1**, wherein a sum of the alternating layers has a height from about 20 nm to about 2 μm.

3. The method of claim **1**, wherein each of the first portions has a first width, the first width being greater than the first distance, and wherein the first distance is from about 10 nm to about 200 nm.

4. The method of claim **1**, wherein the first material comprises Ti, Sb, Sn, Zr, Al, or Hf, and the second material comprises an organic planarization layer, spin on glass, SiN, or an Si containing material.

5. The method of claim **1**, wherein the sidewall of each first portion is etched using CH_3F, CH_4, CHF_3, CF_4, or O_2.

6. The method of claim **1**, wherein each alternating layer has a thickness from about 10 nm to about 100 μm.

7. The method of claim **1**, wherein the lithography tool is a g-line, h-line, i-line, 248 nm, 193 nm, 193 nm immersion, or extreme ultraviolet lithography tool.

8. A method of forming a plurality of nanostructures using a lithography tool, comprising:

forming a first layer on a transparent substrate, the first layer comprising first portions spaced from each other by one or more trenches, the first portions comprising a first material;

depositing a second layer comprising a second material over the first material and in the one or more trenches to form a first alternating layer comprising first portions comprising the first material disposed in contact with second portions comprising the second material, the second material different than the first material;

forming one or more additional alternating layers over the first alternating layer, each second portion of each alternating layer disposed in contact with and offset from an adjacent second portion in adjacent alternating layers;

removing one of the first portions or the second portions from each alternating layer; and

etching a sidewall of the other of the first portions or the second portions to form the plurality of nanostructures.

9. The method of claim 8, wherein the sidewall is disposed at an angle from 0° to about 90° from a first surface of the transparent substrate.

10. The method of claim 8, wherein each of the second portions has a first width, the first width being greater than the first distance, and wherein the first distance is from about 10 nm to about 200 nm.

11. The method of claim 8, wherein the first material comprises Ti, Sb, Sn, Zr, Al, or Hf, and the second material comprises an organic planarization layer, spin on glass, SiN, or an Si containing material.

12. The method of claim 8, wherein the sidewall is etched using CH_3F, CH_4, CHF_3, CF_4, O_2, or Cl.

13. The method of claim 8, wherein a sum of the alternating layers has a height from about 20 nm to about 2 μm.

14. The method of claim 8, wherein the lithography tool is a g-line, h-line, i-line, 248 nm, 193 nm, 193 nm immersion, or extreme ultraviolet lithography tool.

15. A method of forming a plurality of nanostructures using a lithography tool, comprising:

forming a first layer on a first surface of a transparent substrate, the first layer comprising first portions spaced from each other by one or more trenches, the first portions comprising a first material and the first material comprising a metal;

depositing a second layer comprising a second material in the one or more trenches to form a first alternating layer comprising alternating first portions comprising the first material disposed in contact with second portions comprising the second material, the second material different than the first material;

forming one or more additional alternating layers over the first alternating layer, each first portion of each alternating layer disposed in contact with and offset a first distance from an adjacent first portion in adjacent alternating layers, and wherein the first portions have a first width, the first width greater than the first distance; and

removing either the first portions or the second portions from each alternating layer.

16. The method of claim 15, wherein the removing forms the plurality of nanostructures, and the method further comprises:

etching a sidewall of each of the plurality of nanostructures to smooth the sidewall, wherein the sidewall is disposed at an angle from 0° to about 90° from the first surface of the transparent substrate.

17. The method of claim 16, wherein the first portions are removed from each alternating layer, and the sidewall is etched using CH_3F, CH_4, CHF_3, CF_4, O_2, or Cl.

18. The method of claim 16, wherein the second portions are removed from each alternating layer, and the sidewall is etched using CH_3F, CH_4, CHF_3, CF_4, or O_2.

19. The method of claim 15, wherein the first distance is from about 10 nm to about 200 nm, wherein each alternating layer has a thickness from about 10 nm to about 100 μm, and wherein a sum of the alternating layers has a height from about 20 nm to about 2 μm.

20. The method of claim 15, wherein the lithography tool is a g-line, h-line, i-line, 248 nm, 193 nm, 193 nm immersion, or extreme ultraviolet lithography tool.

* * * * *