US012216243B2

(12) **United States Patent**
Godet et al.

(10) **Patent No.: US 12,216,243 B2**
(45) **Date of Patent: Feb. 4, 2025**

(54) **AIR-SPACED ENCAPSULATED DIELECTRIC NANOPILLARS FOR FLAT OPTICAL DEVICES**

(71) Applicant: **Applied Materials, Inc.**, Santa Clara, CA (US)

(72) Inventors: **Ludovic Godet**, Sunnyvale, CA (US); **Tapashree Roy**, Bangalore (IN); **Prerna Sonthalia Goradia**, Mumbai (IN); **Srobona Sen**, Mumbai (IN); **Robert Jan Visser**, Menlo Park, CA (US); **Nitin Deepak**, Mumbai (IN); **Tapash Chakraborty**, Maharashtra (IN)

(73) Assignee: **Applied Materials, Inc.**, Santa Clara, CA (US)

(*) Notice: Subject to any disclaimer, the term of this patent is extended or adjusted under 35 U.S.C. 154(b) by 1101 days.

(21) Appl. No.: **16/905,703**

(22) Filed: **Jun. 18, 2020**

(65) **Prior Publication Data**

US 2020/0400990 A1 Dec. 24, 2020

(30) **Foreign Application Priority Data**

Jun. 18, 2019 (IN) 201941024110

(51) **Int. Cl.**
G02F 1/1339 (2006.01)
B32B 3/20 (2006.01)
G02B 1/06 (2006.01)

(52) **U.S. Cl.**
CPC ***G02B 1/06*** (2013.01); ***B32B 3/20*** (2013.01); *G02B 2207/101* (2013.01); *G02B 2207/109* (2013.01); *G02F 1/13398* (2021.01)

(58) **Field of Classification Search**
CPC B32B 3/20; G02F 1/13398
See application file for complete search history.

(56) **References Cited**

U.S. PATENT DOCUMENTS

5,736,425 A 4/1998 Smith et al.
9,449,871 B1 9/2016 Bergendahl et al.
(Continued)

FOREIGN PATENT DOCUMENTS

EP 1416303 A2 5/2004
EP 1416303 B1 11/2010
(Continued)

OTHER PUBLICATIONS

Translation of Shibuya, JP2005266343 (Year: 2005).*
(Continued)

Primary Examiner — Ian A Rummel
(74) *Attorney, Agent, or Firm* — Patterson + Sheridan, LLP

(57) **ABSTRACT**

Embodiments described herein relate to flat optical devices and methods of forming flat optical devices. One embodiment includes a substrate having a first arrangement of a first plurality of pillars formed thereon. The first arrangement of the first plurality of pillars includes pillars having a height h and a lateral distance d, and a gap g corresponding to a distance between adjacent pillars of the first plurality of pillars. An aspect ratio of the gap g to the height h is between about 1:1 and about 1:20. A first encapsulation layer is disposed over the first arrangement of the first plurality of pillars. The first encapsulation layer has a refractive index of about 1.0 to about 1.5. The first encapsulation layer, the substrate, and each of the pillars of the first arrangement define a first space therebetween. The first space has a refractive index of about 1.0 to about 1.5.

15 Claims, 10 Drawing Sheets

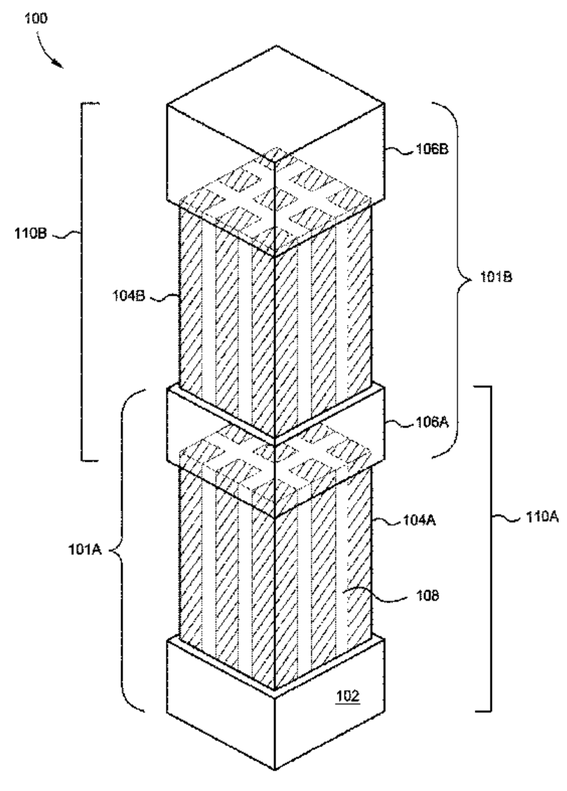

(56) **References Cited**

U.S. PATENT DOCUMENTS

2004/0109483	A1	6/2004	Simpson et al.	
2004/0125266	A1	7/2004	Miyauchi et al.	
2007/0267057	A1	11/2007	Haluzak et al.	
2014/0071541	A1	3/2014	Rousseau et al.	
2014/0272295	A1*	9/2014	Deshpande	G02B 27/0006 428/141
2016/0054476	A1	2/2016	Choi et al.	
2016/0131808	A1	5/2016	Kristensen et al.	
2016/0225716	A1	8/2016	Lu et al.	
2018/0224574	A1	8/2018	Lee et al.	
2018/0292644	A1*	10/2018	Kamali	G02B 3/00

FOREIGN PATENT DOCUMENTS

JP	2005266343	A	9/2005
JP	2006520697	A	9/2006
JP	2007125665	A	5/2007
JP	2008165207	A	7/2008
JP	2009187025	A	8/2009
JP	2011191474	A	9/2011
JP	2017536824	A	12/2017
TW	201303401	A	1/2013
TW	201610611	A	3/2016
TW	201906719	A	2/2019
TW	201908232	A	3/2019
WO	2007137044	A2	11/2007

OTHER PUBLICATIONS

Taiwan Office Action issued to Application No. 109120552 on Dec. 7, 2021.
Korean Office Action issued to Patent Application No. 10-2022-7001518 on Mar. 21, 2023.
Japanese Office Action issued to Patent Application No. 2021-575343 on Jan. 17, 2023.
International Search Report/Written Opinion issued to PCT/US2020/037961 on Sep. 23, 2020.
European Search Report issued to Patent Application No. 20827300.3 on Jun. 26, 2023.
India Office Action issued to Patent Application No. 202247001457 on Mar. 8, 2022.
Taiwan Office Action issued to Application No. 109120552 on Apr. 28, 2021.
Korean Office Action issued to Patent Application No. 10-2022-7001518 on Oct. 31, 2023.
Japanese Office Action issued to Patent Application No. 2021-575343 on Oct. 3, 2023.
Japanese Office Action issued to patent application No. 2021-575343 on Sep. 17, 2024.
Chinese Office Action issued to patent application No. 202080048619.3 on Jun. 17, 2024.

* cited by examiner

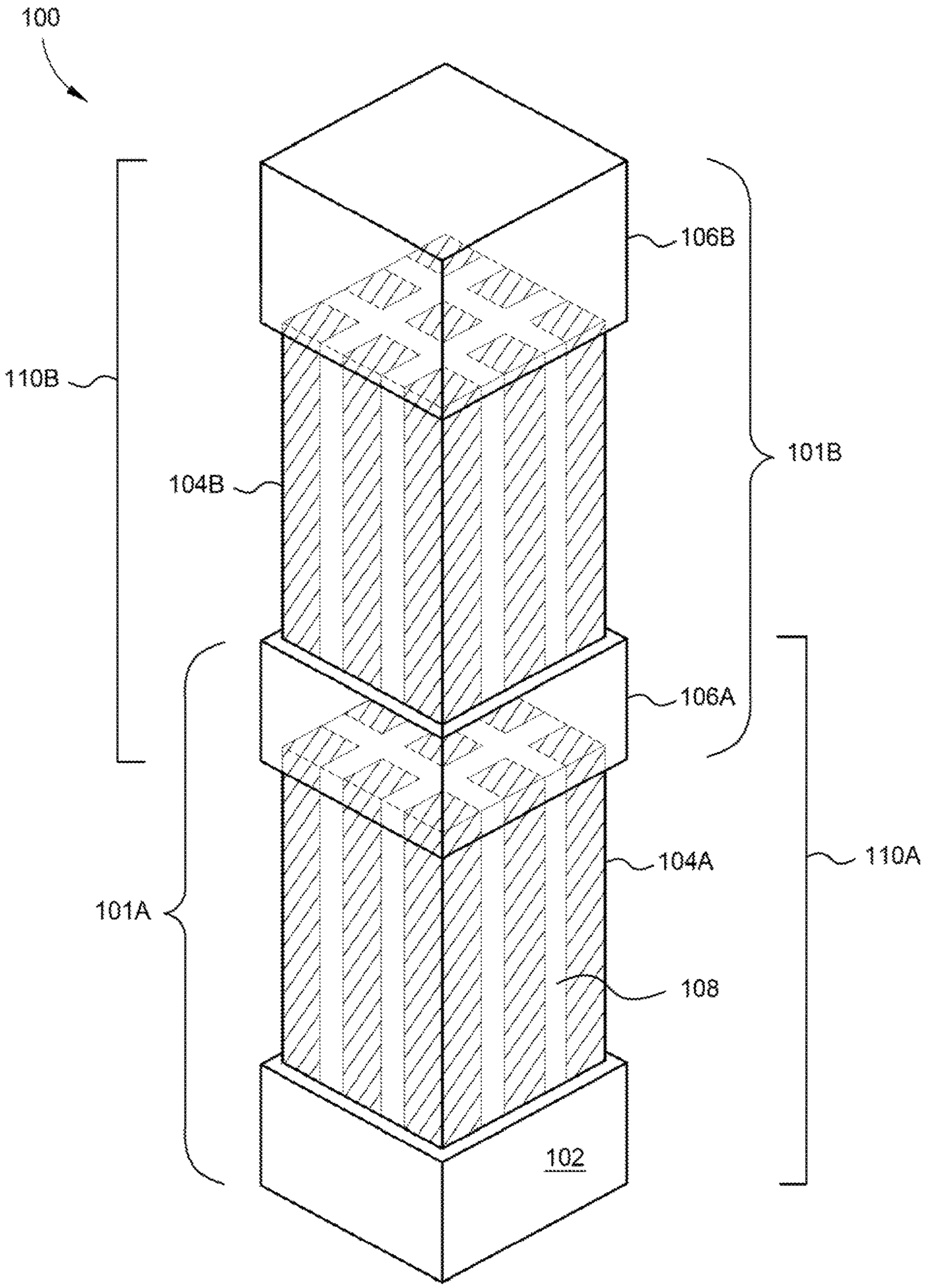

FIG. 1A

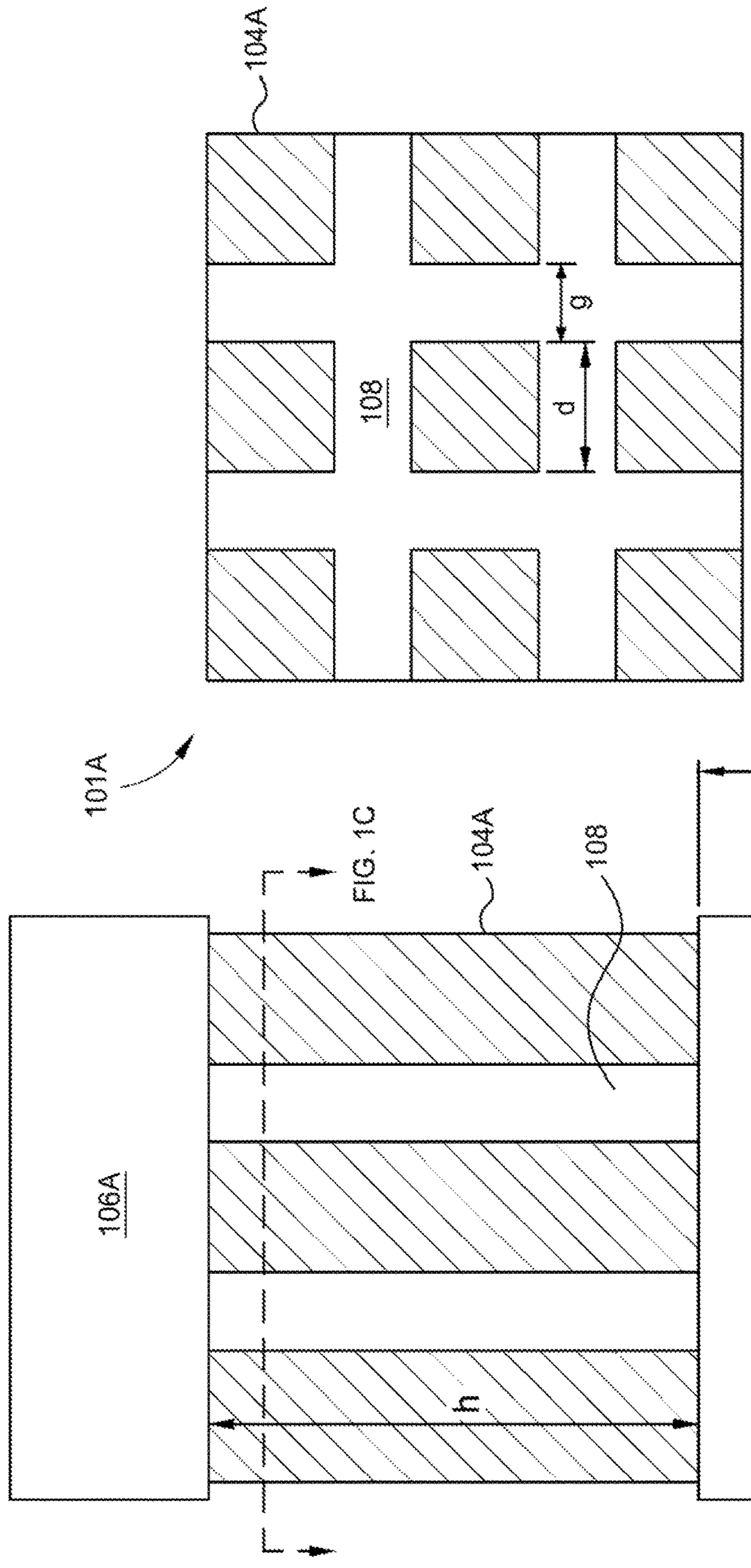

FIG. 1B

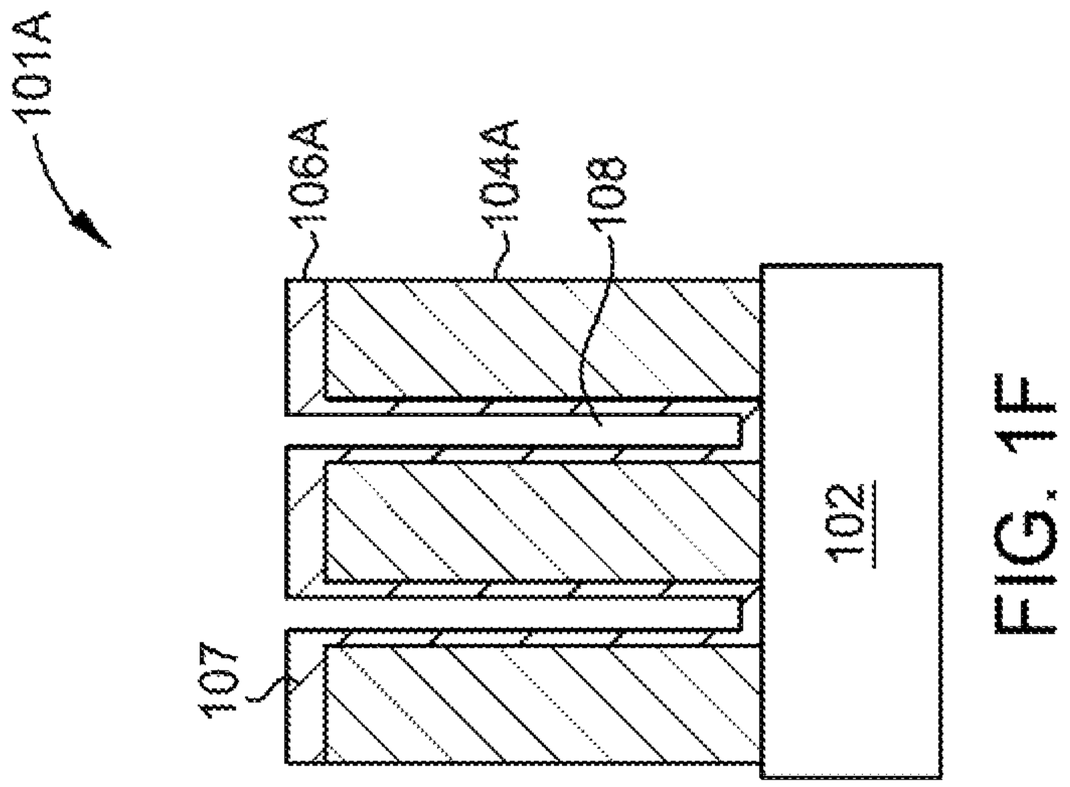

FIG. 1F

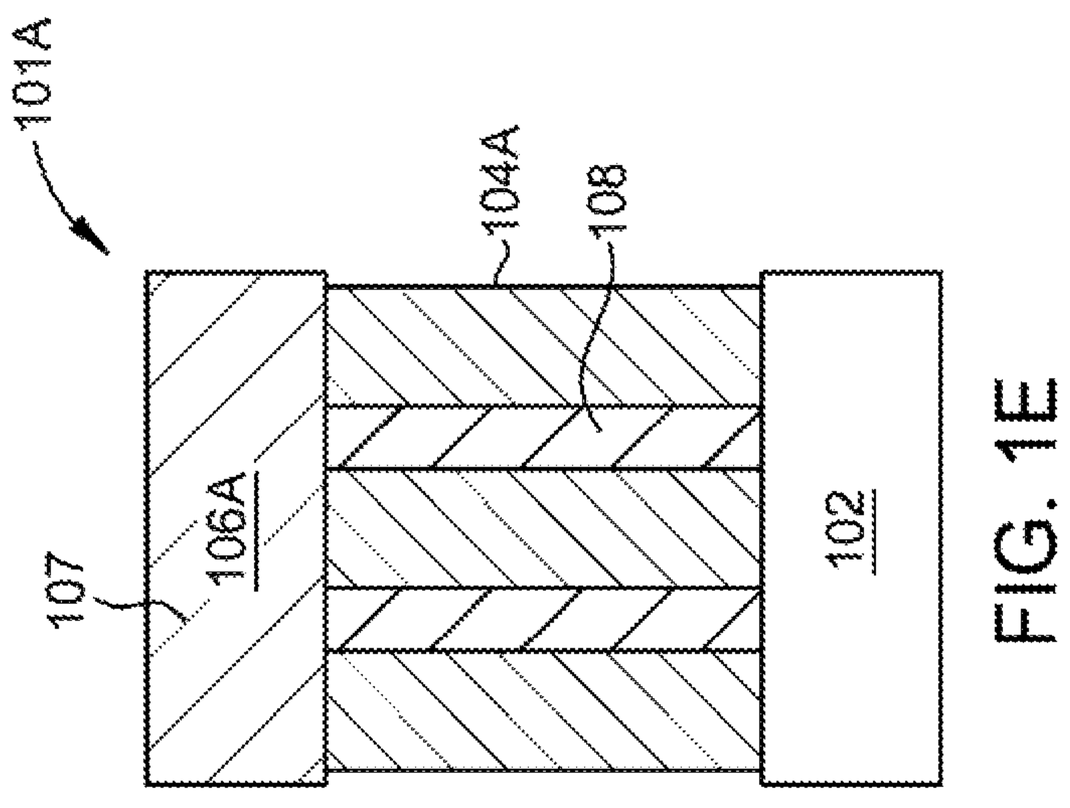

FIG. 1E

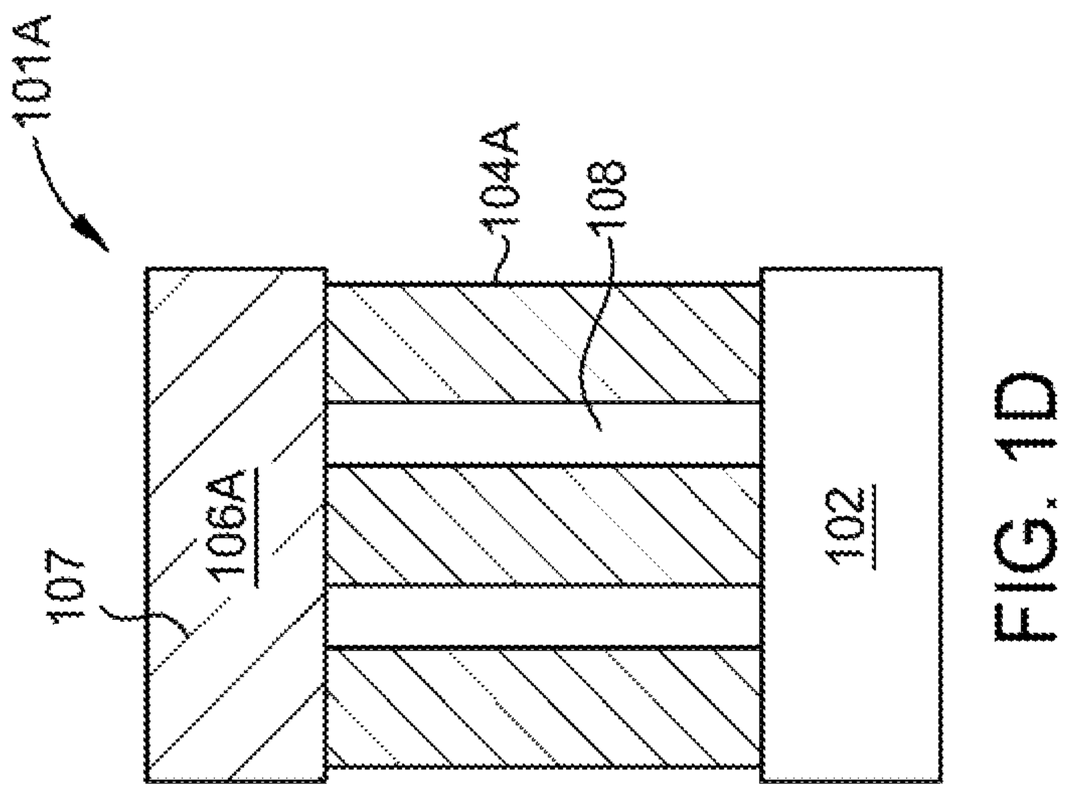

FIG. 1D

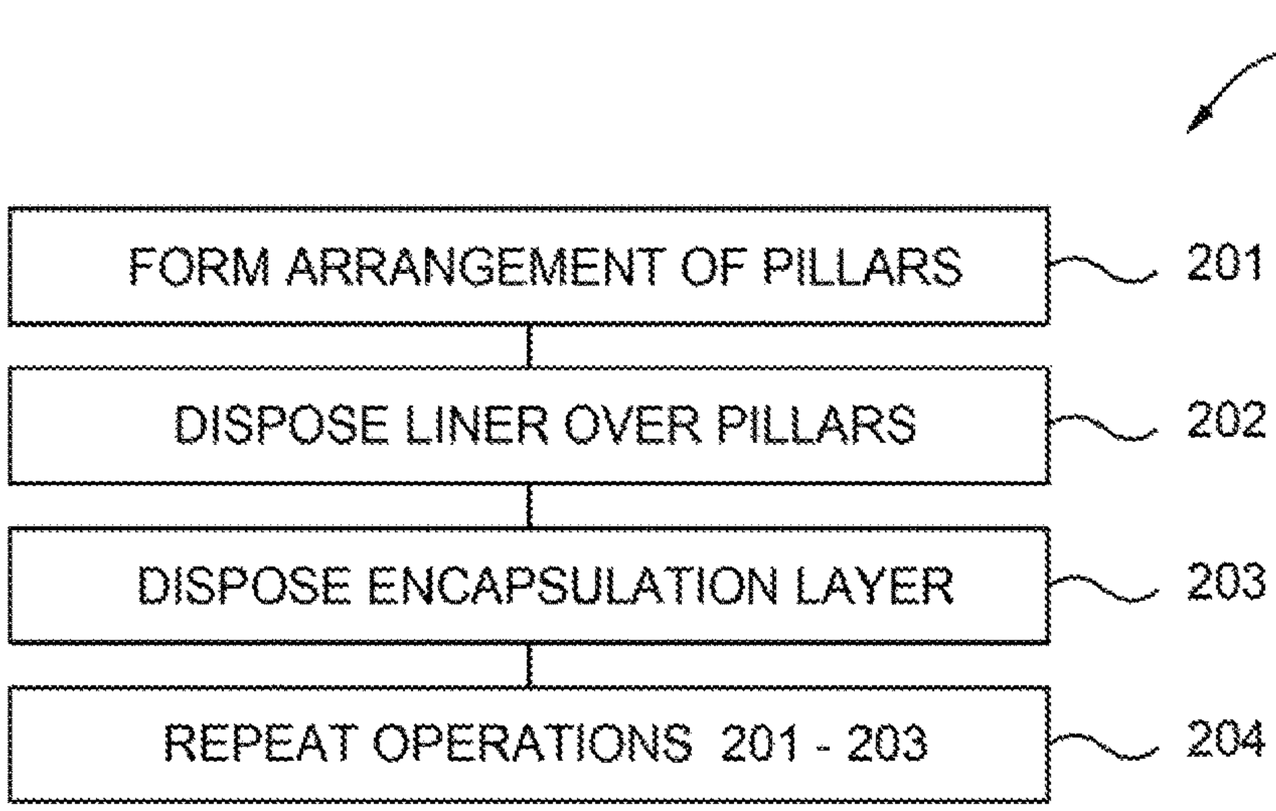

FIG. 2

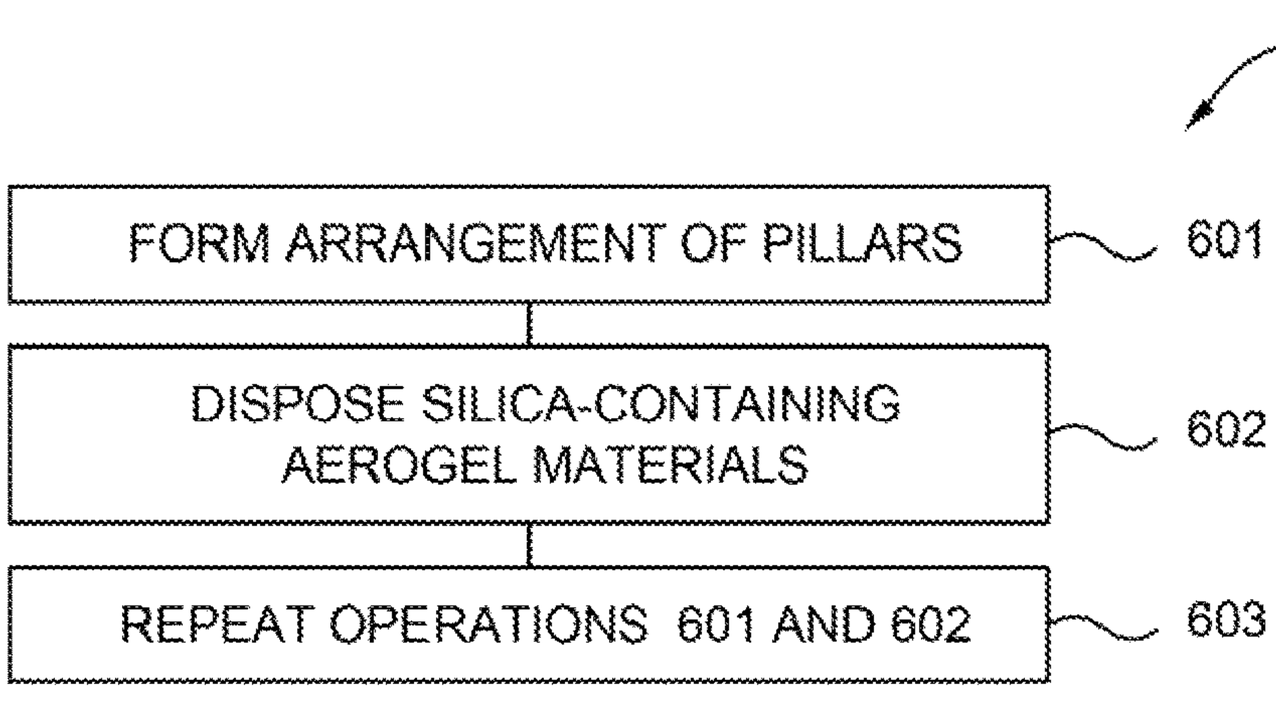

FIG. 6

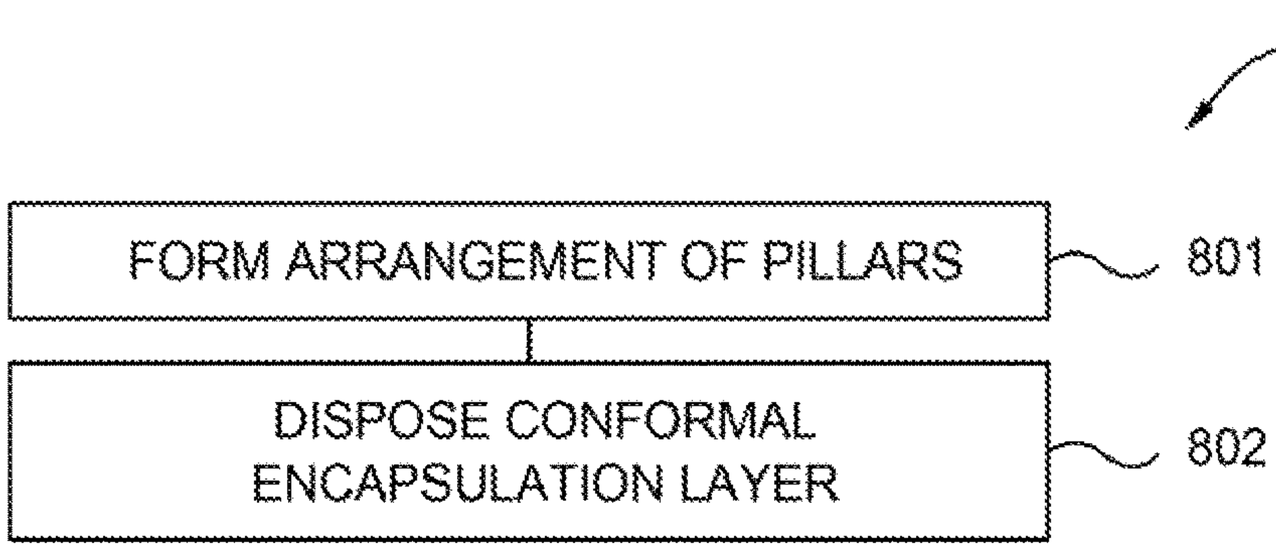

FIG. 8

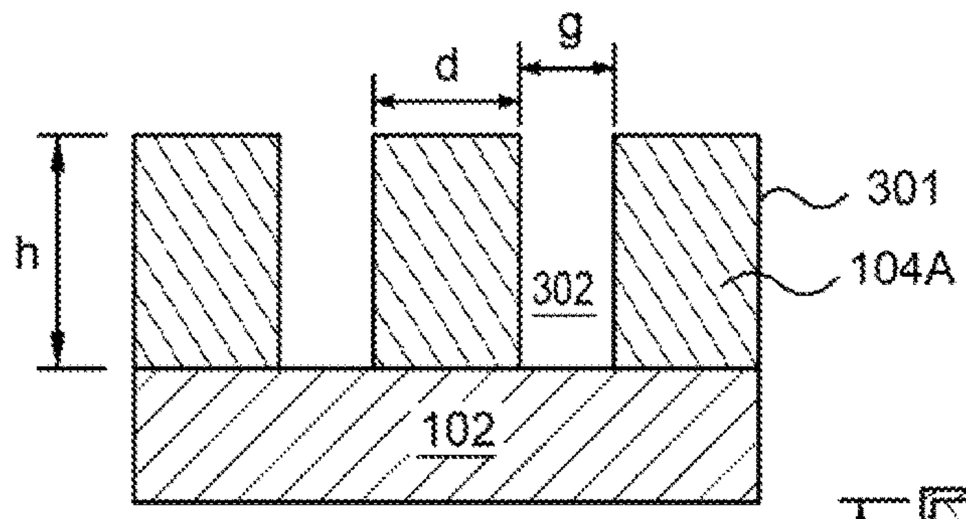

FIG. 3A

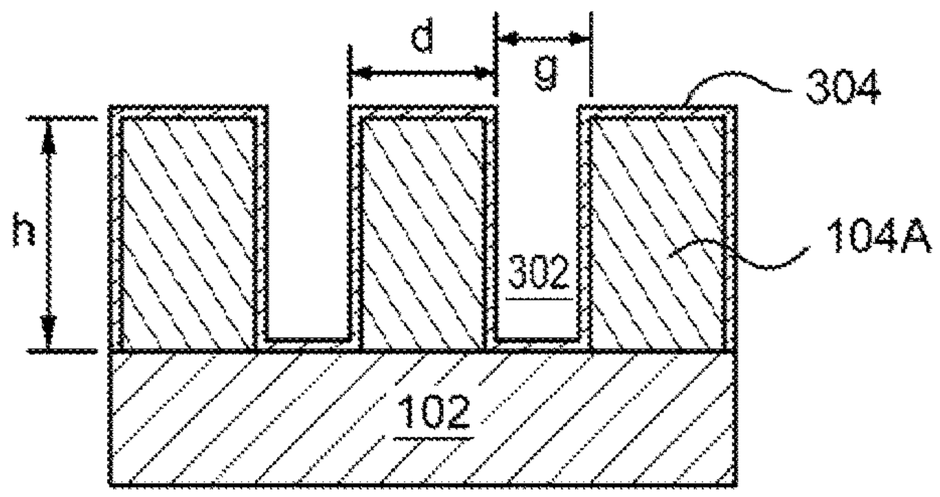

FIG. 3B

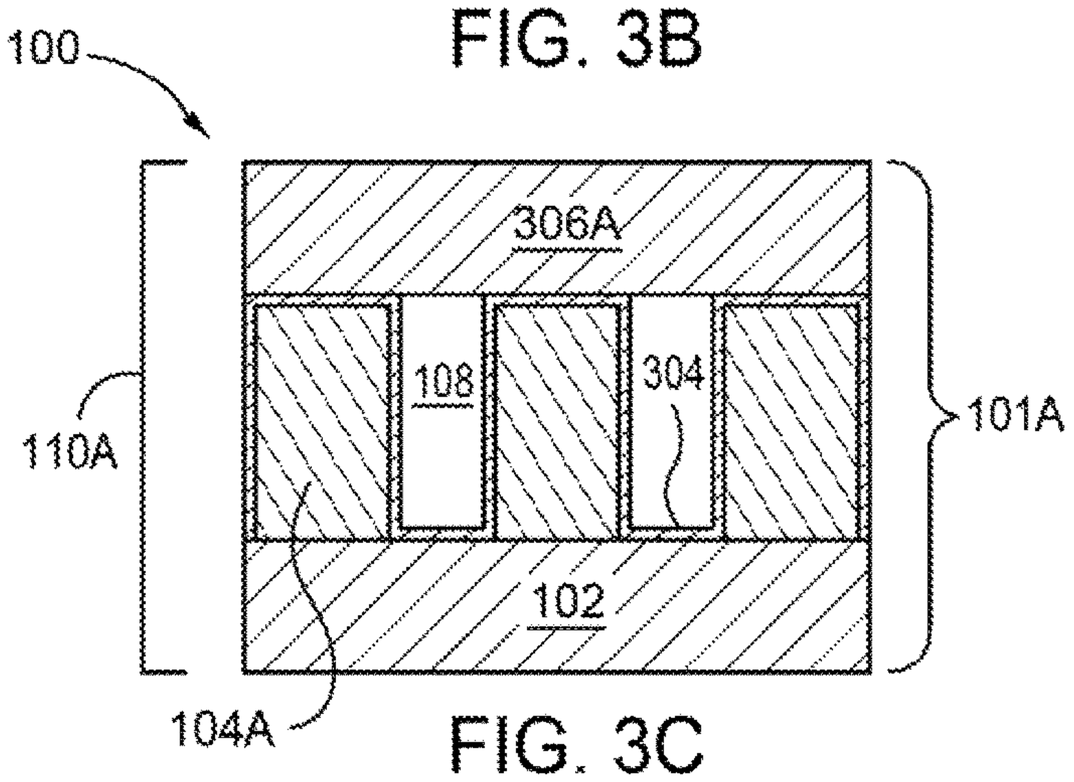

FIG. 3C

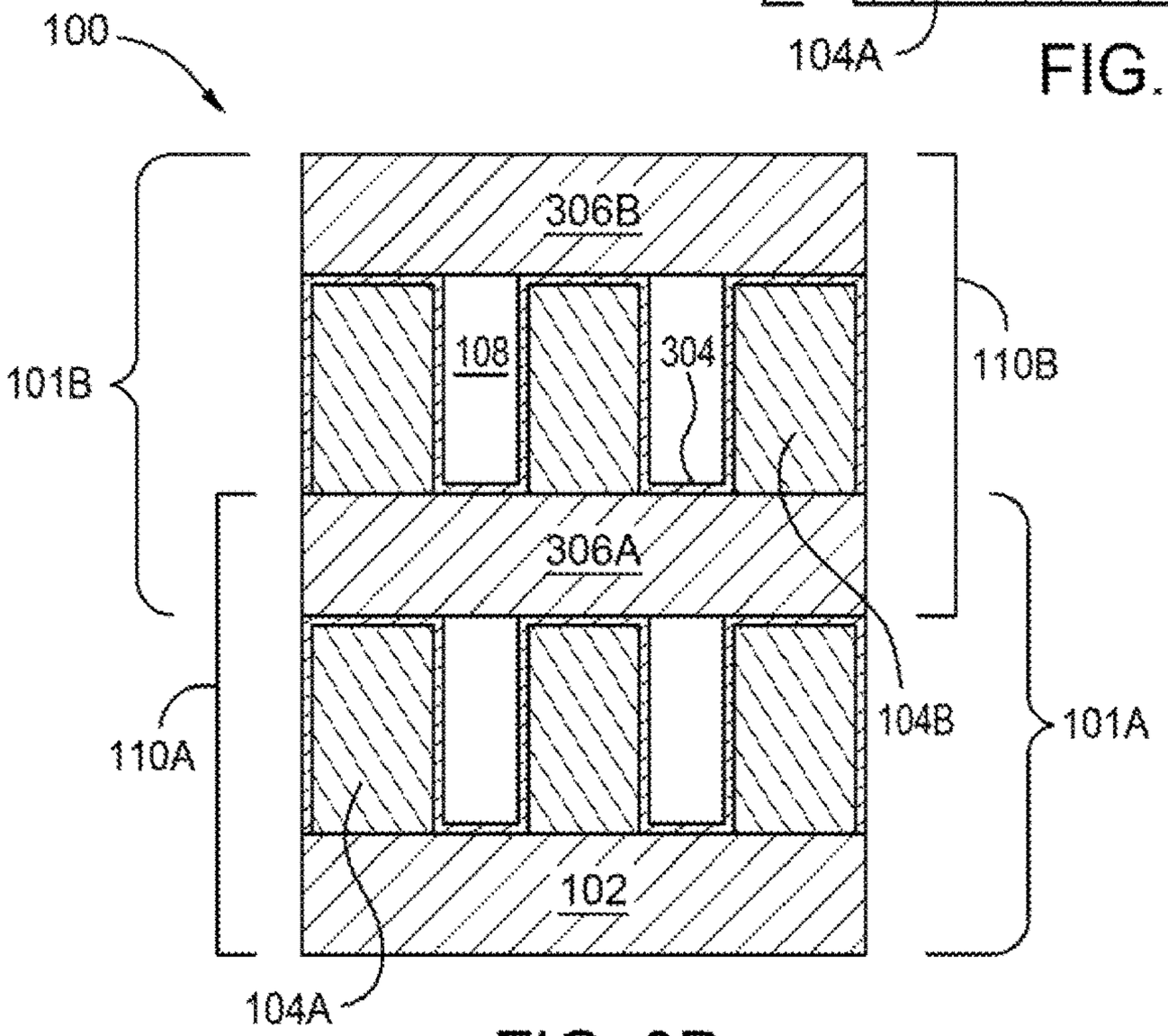

FIG. 3D

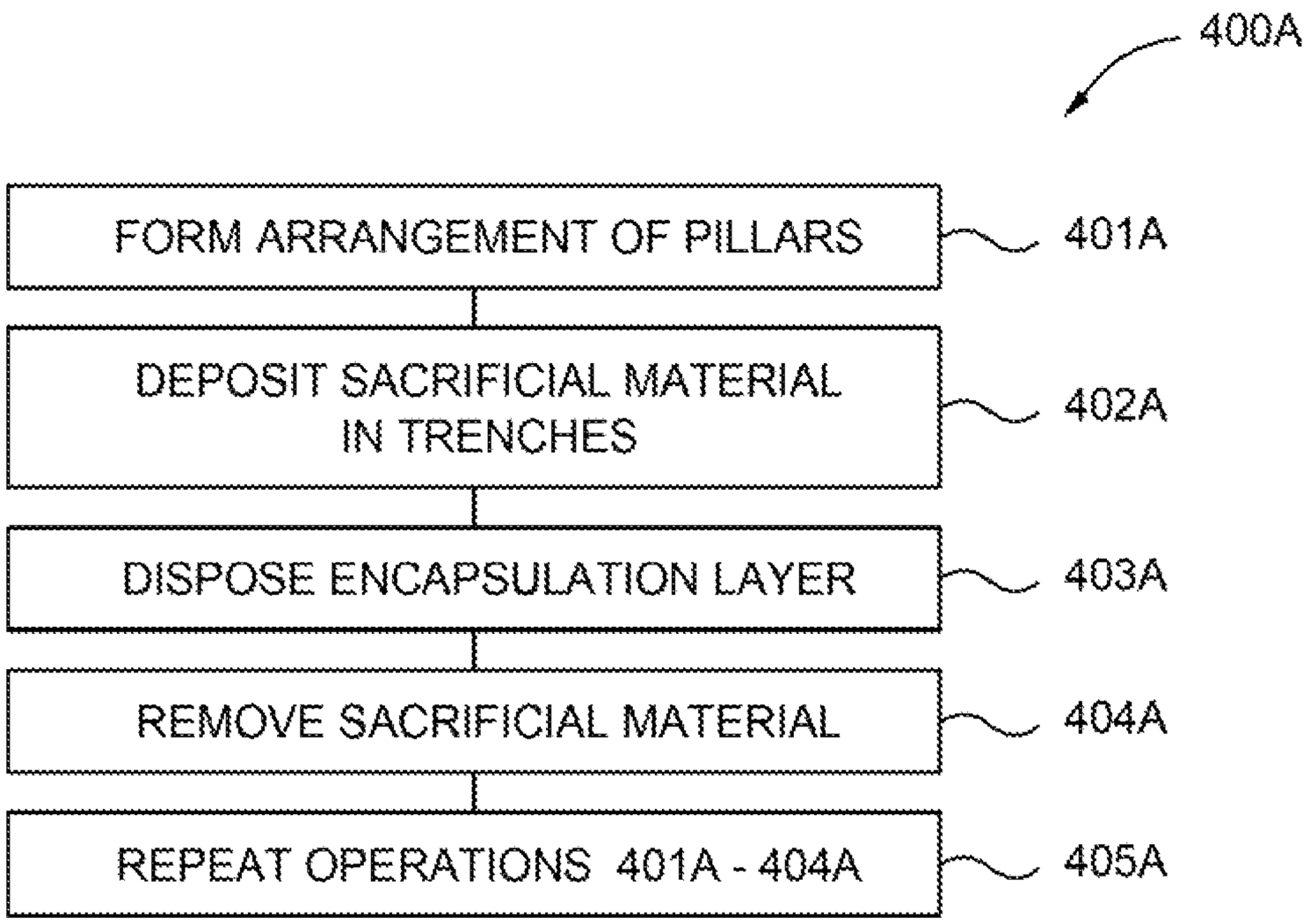
400A
FORM ARRANGEMENT OF PILLARS
401A
DEPOSIT SACRIFICIAL MATERIAL IN TRENCHES
402A
DISPOSE ENCAPSULATION LAYER
403A
REMOVE SACRIFICIAL MATERIAL
404A
REPEAT OPERATIONS 401A - 404A
405A

FIG. 4A

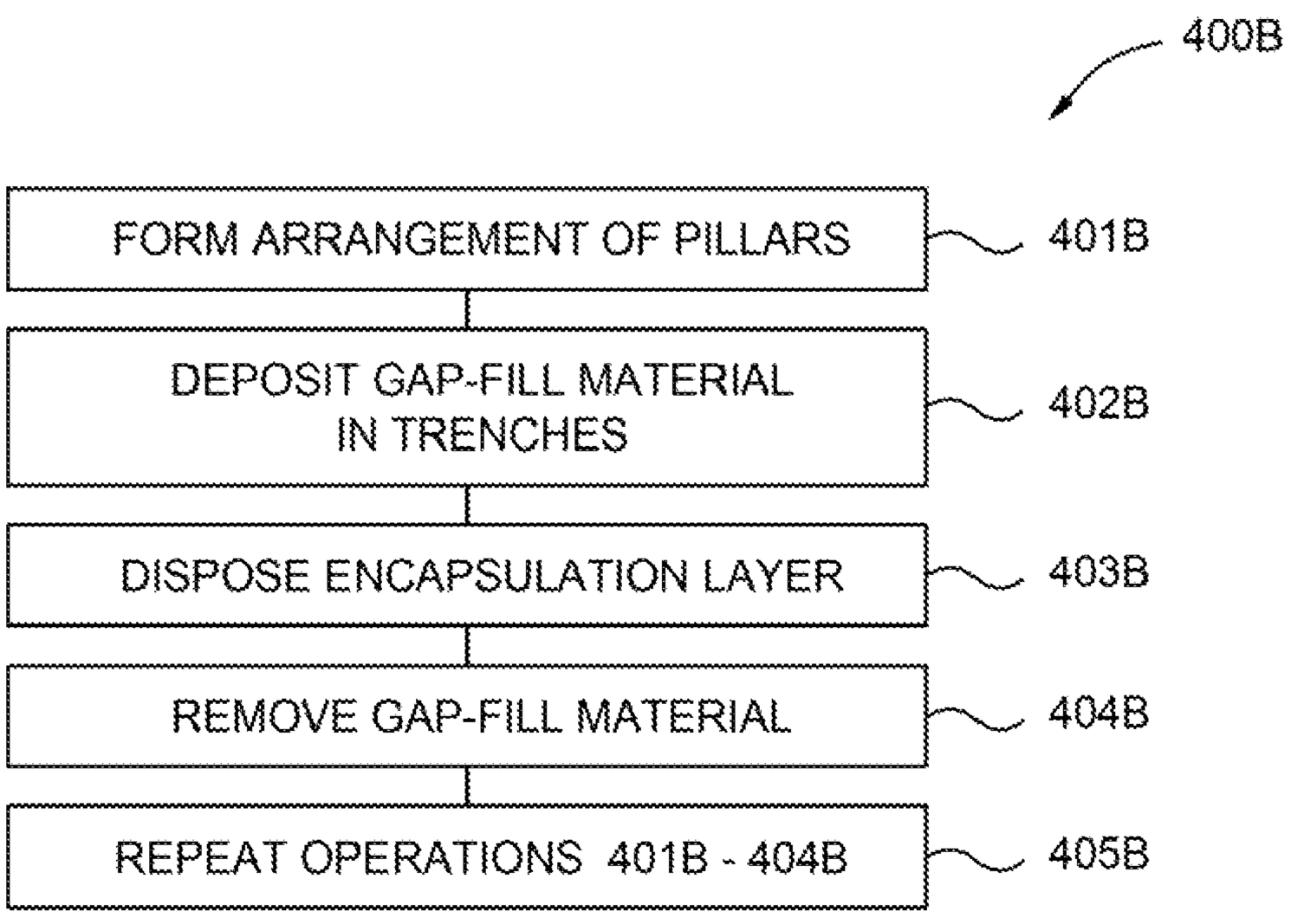
400B
FORM ARRANGEMENT OF PILLARS
401B
DEPOSIT GAP-FILL MATERIAL IN TRENCHES
402B
DISPOSE ENCAPSULATION LAYER
403B
REMOVE GAP-FILL MATERIAL
404B
REPEAT OPERATIONS 401B - 404B
405B

FIG. 4B

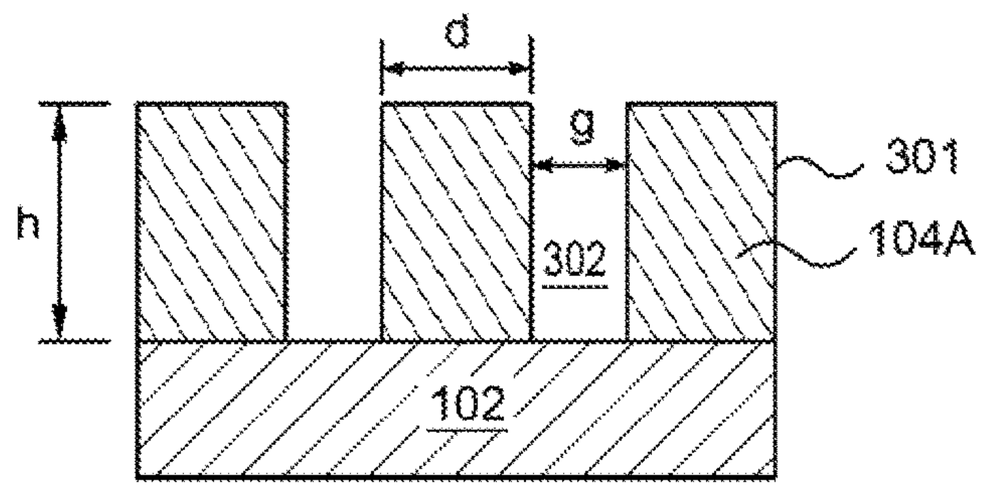

FIG. 5A

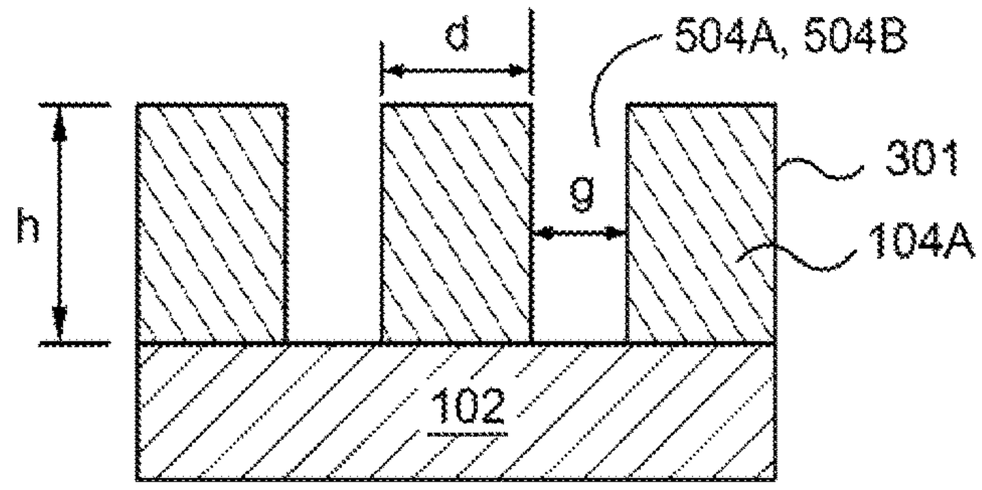

FIG. 5B

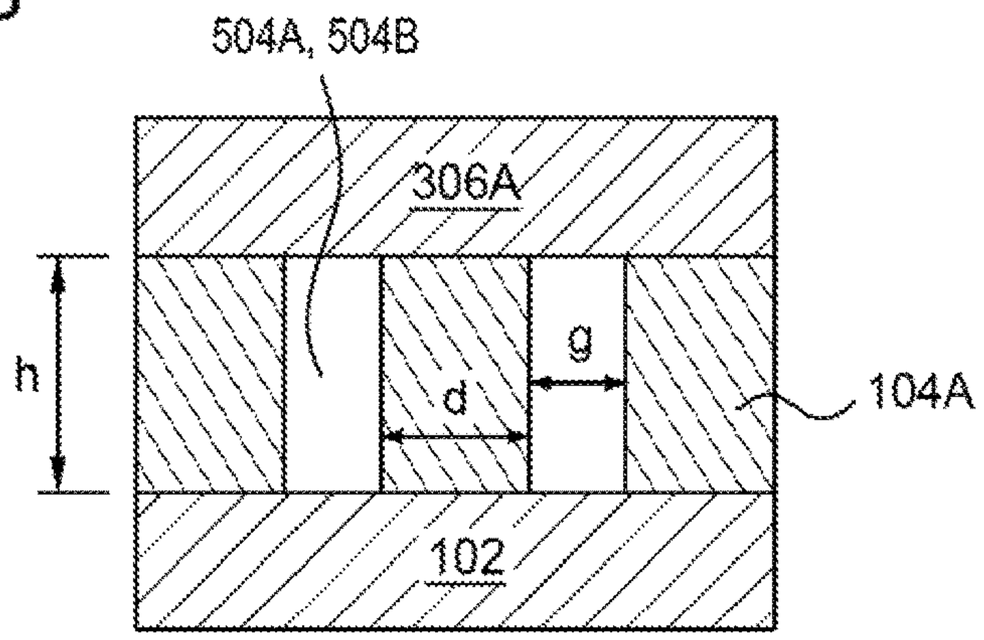

FIG. 5C

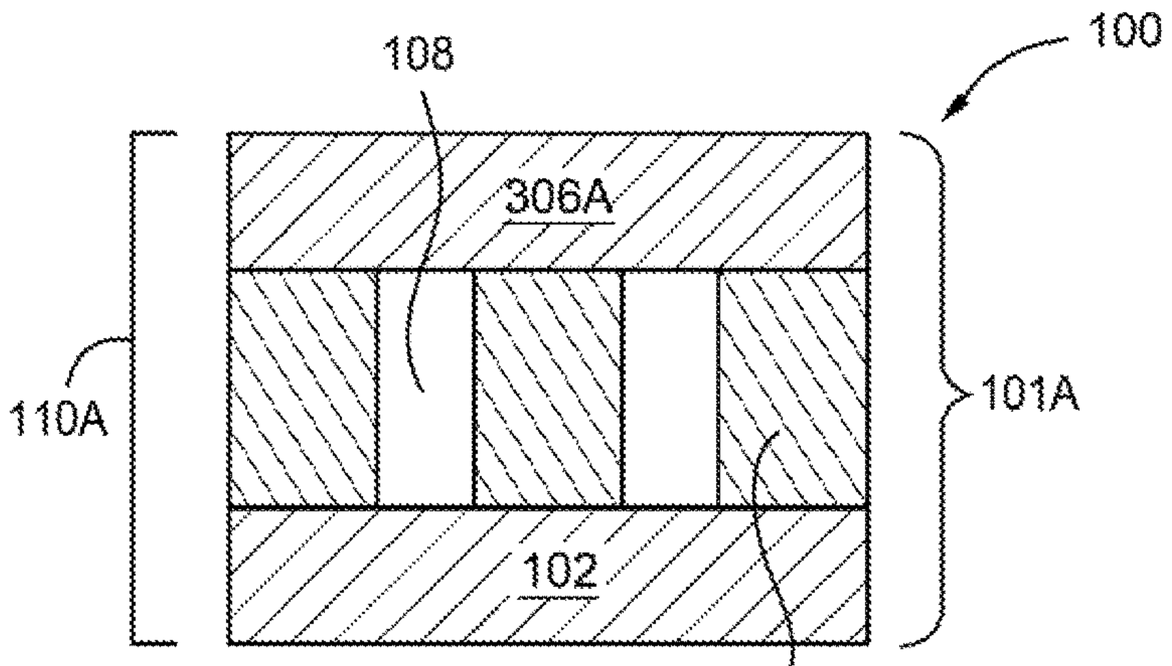

FIG. 5D

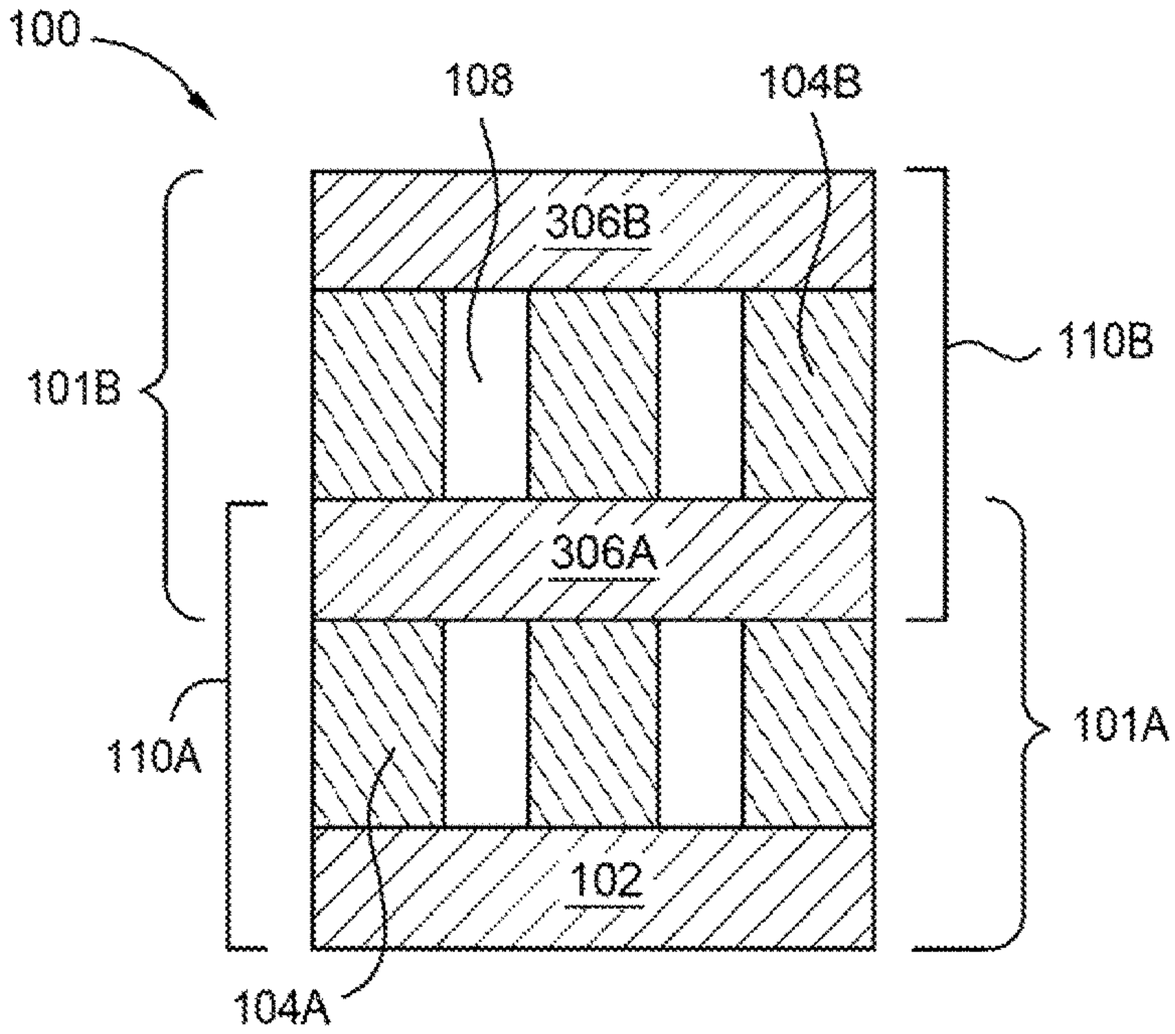

FIG. 5E

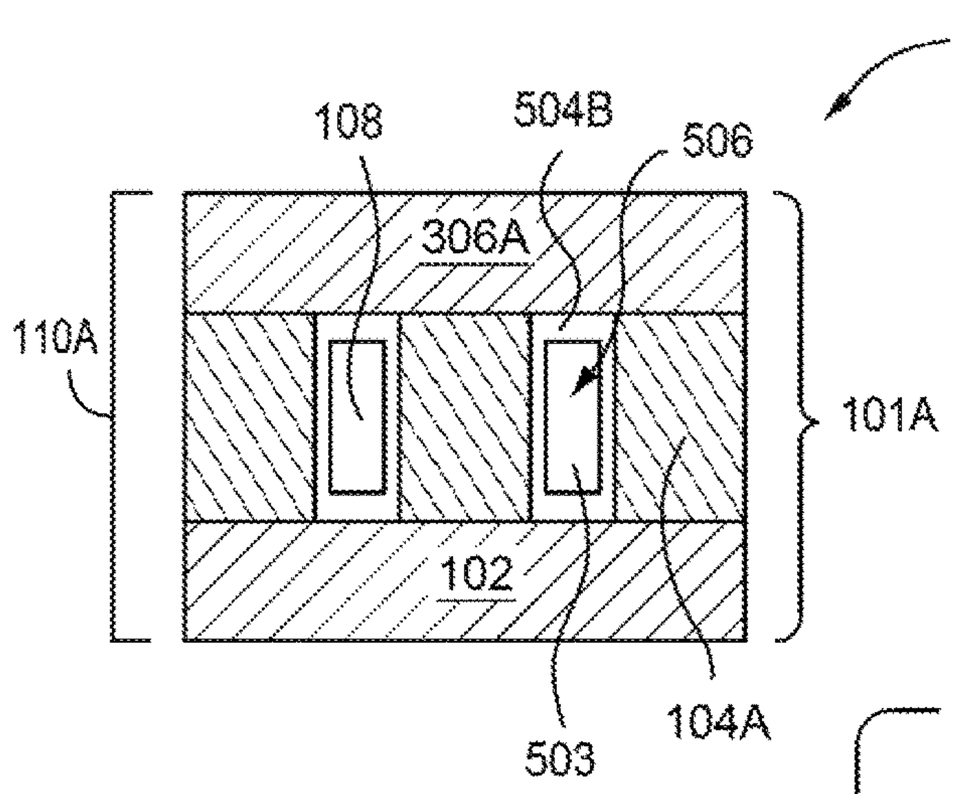

FIG. 5F

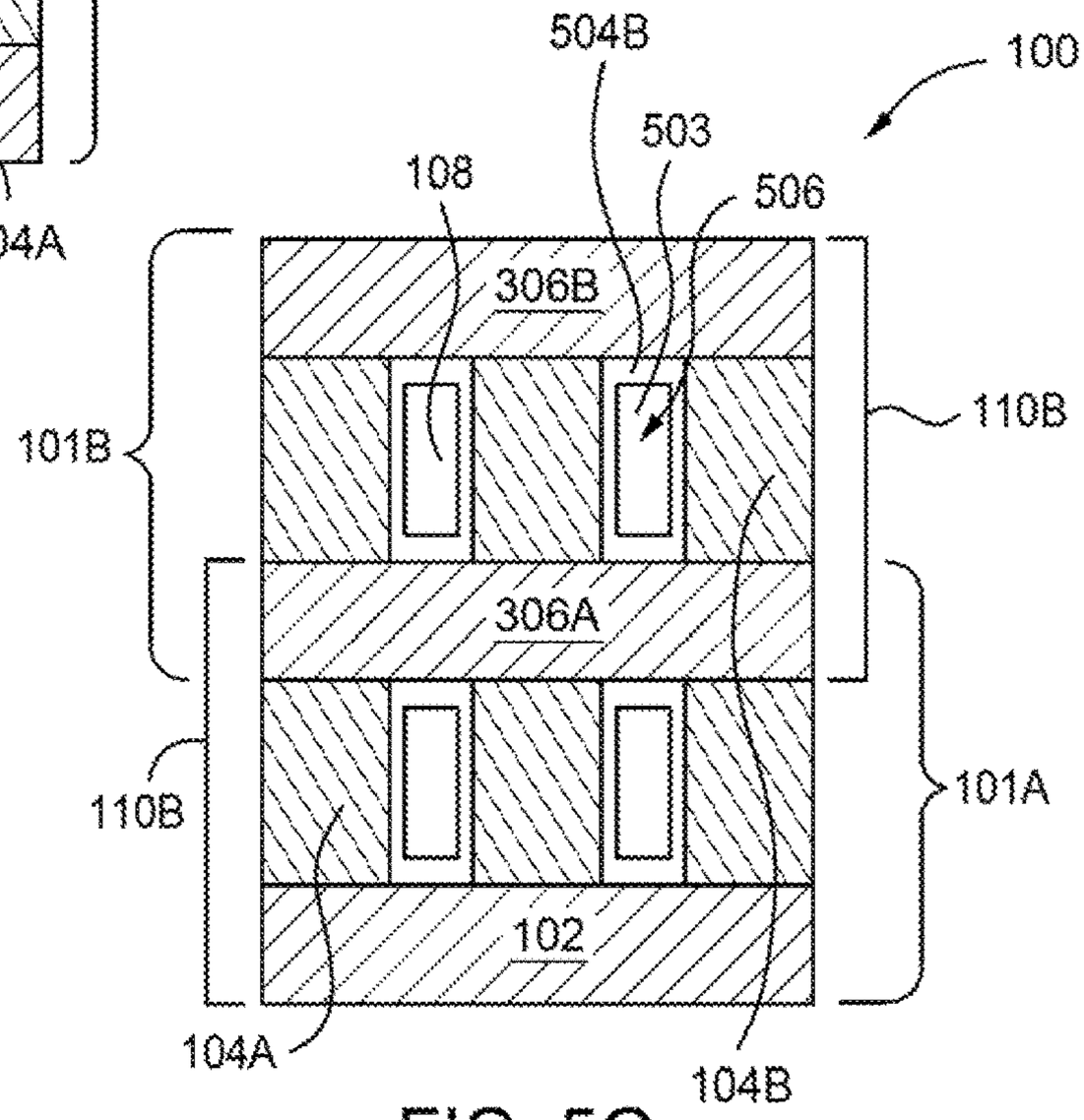

FIG. 5G

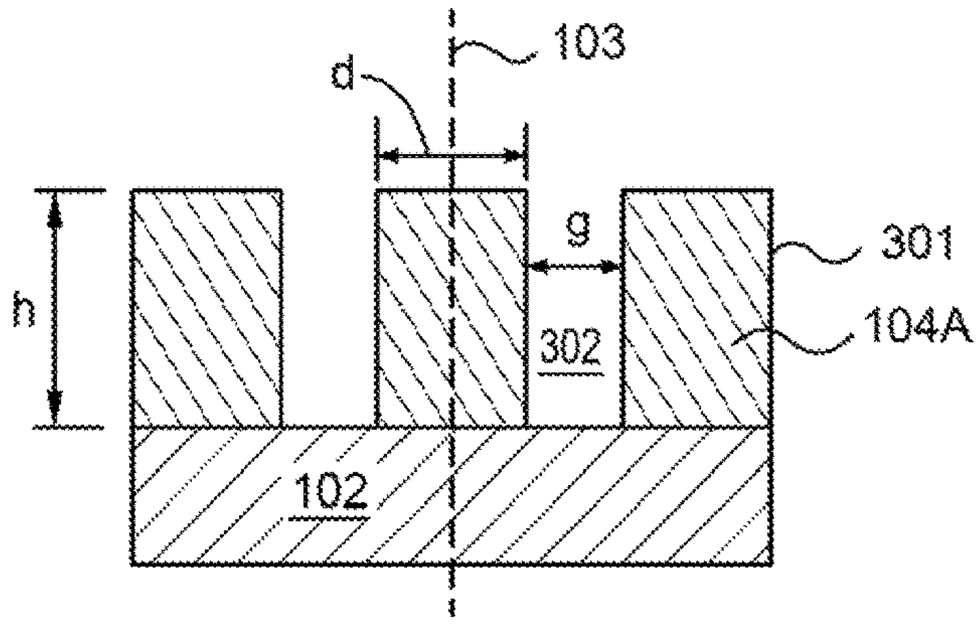

FIG. 7A

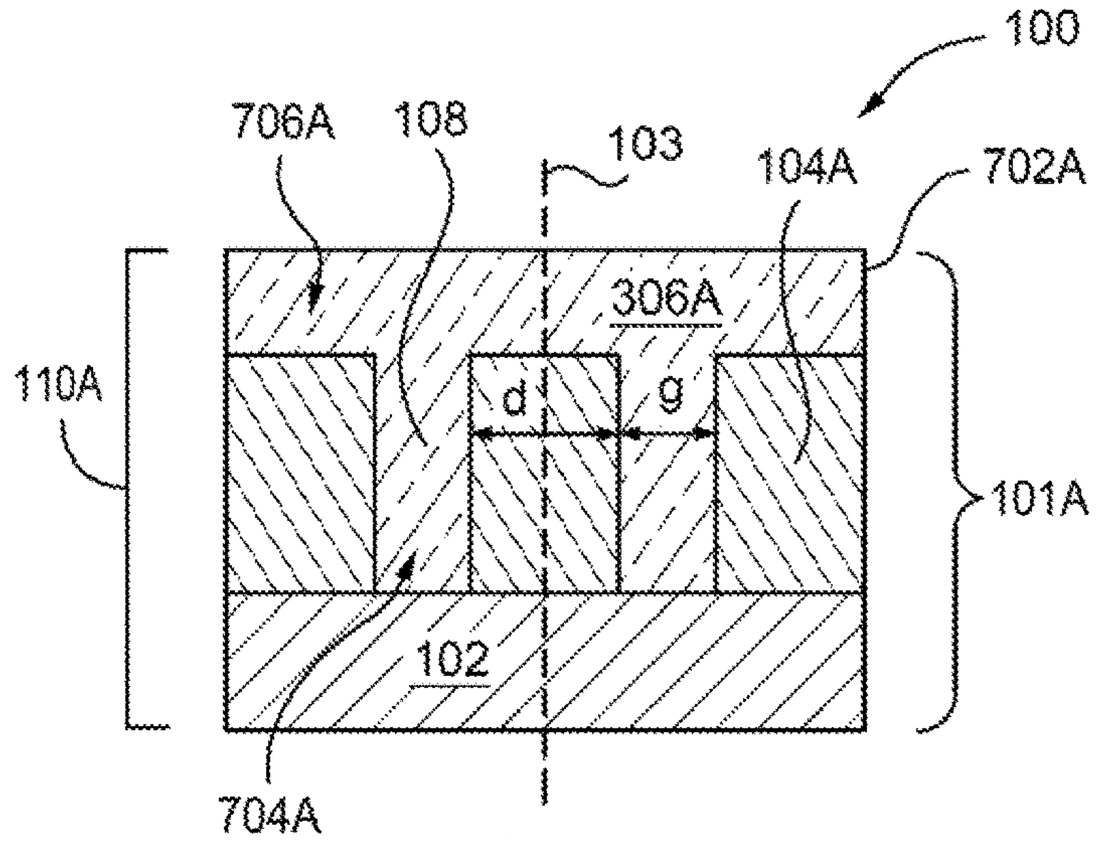

FIG. 7B

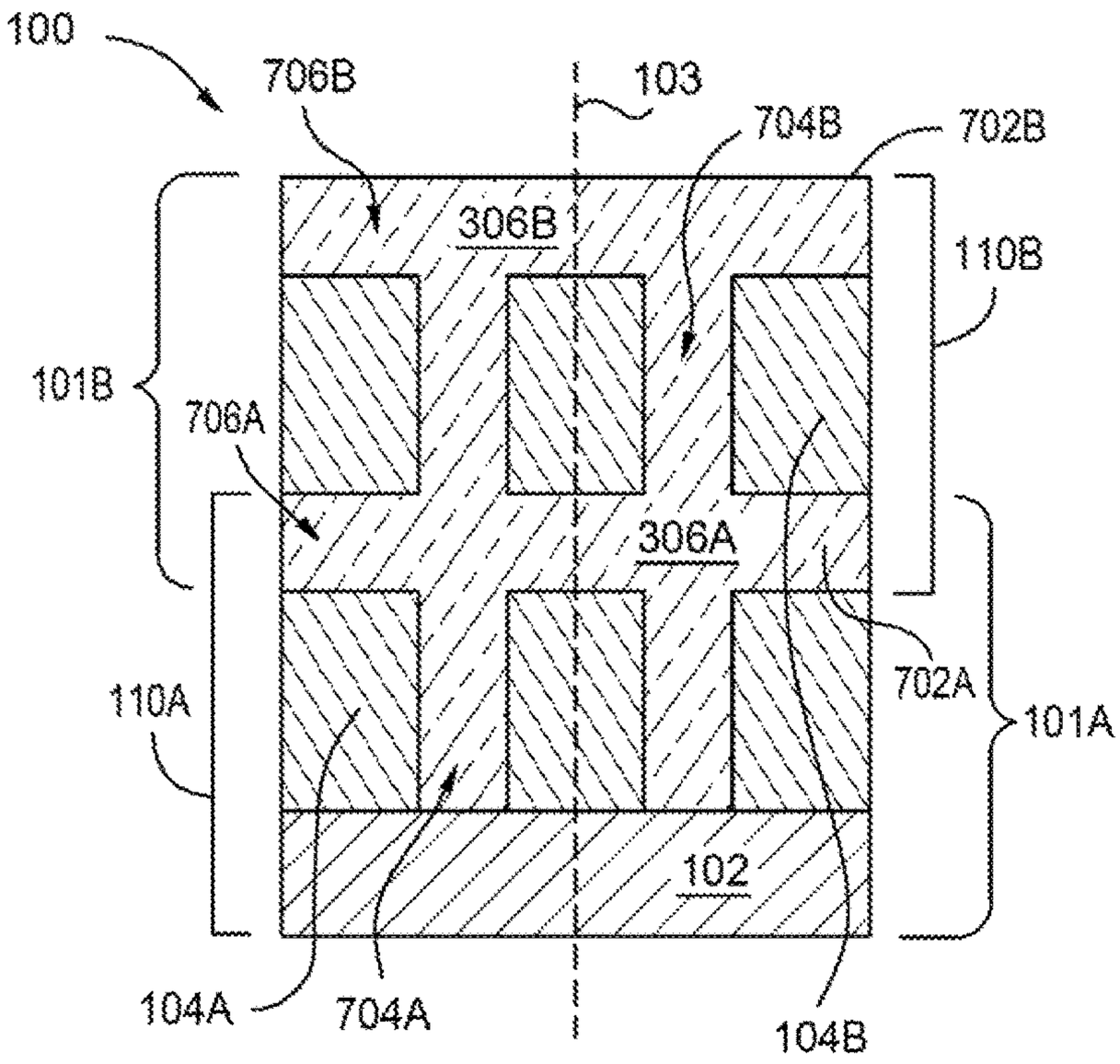

FIG. 7C

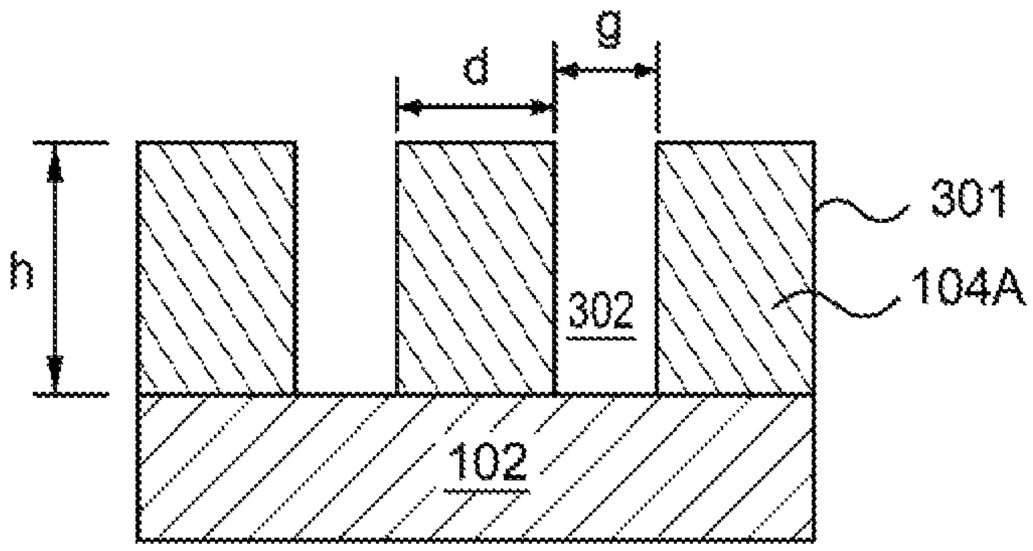

FIG. 9A

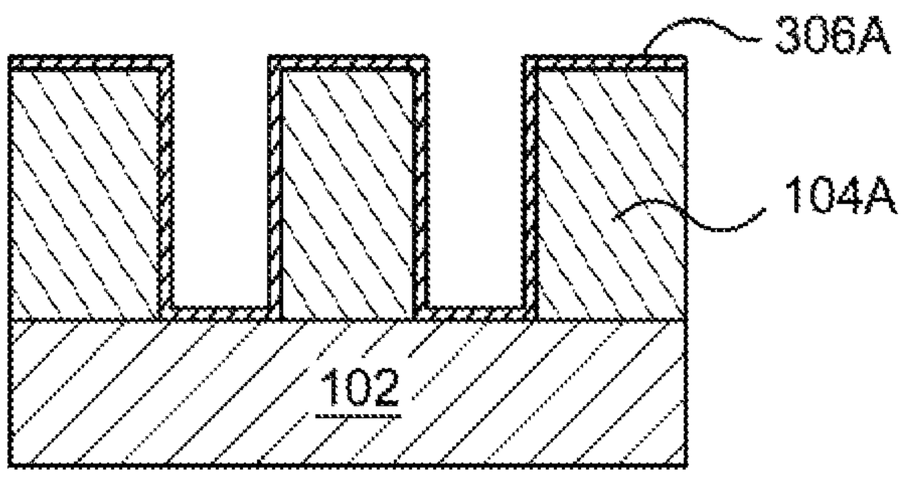

FIG. 9B

AIR-SPACED ENCAPSULATED DIELECTRIC NANOPILLARS FOR FLAT OPTICAL DEVICES

CROSS-REFERENCE TO RELATED APPLICATIONS

This application claims priority to India Provisional Patent Application Serial No. 201941024110, filed on Jun. 18, 2019, which herein is incorporated by reference.

BACKGROUND

Field

Embodiments of the present disclosure generally relate to optical devices. More specifically, embodiments described herein relate to flat optical devices and methods of forming flat optical devices.

Description of the Related Art

Flat optical devices include arrangements of pillars with in-plane dimensions smaller than half a design wavelength of light, and an out-of-plane dimension of the order of or larger than the design wavelength. A flat optical device may consist of a single, or multiple layers of nanostructured pillars. The pillars of a flat optical device need encapsulation to serve as a protective layer as well as to function as a spacer layer between successive layers of a multilayer arrangement. However, for nanostructured flat optical devices, filling in high aspect ratio openings is often challenging and results in non-uniform gap-fill. Furthermore, the encapsulation of the pillars increases the height of the pillars, and thus increases the total thickness of the flat optical device. The increase in the total thickness of the flat optical device lowers transmission efficiency and increases manufacturing complexity and cost. Therefore, what is needed in the art are improved flat optical devices and methods of forming flat optical devices.

SUMMARY

In one embodiment, a device is provided. The device includes a substrate. The substrate has a first arrangement of a first plurality of pillars formed thereon. The first arrangement of the first plurality of pillars includes pillars having a height h and a lateral distance d, and a gap g corresponding to a distance between adjacent pillars of the first plurality of pillars. An aspect ratio of the gap g to the height h is between about 1:1 and about 1:20. A first encapsulation layer is disposed over the first arrangement of the first plurality of pillars. The first encapsulation layer has a refractive index of about 1.0 to about 1.5. The first encapsulation layer, the substrate, and each of the pillars of the first arrangement define a first space therebetween. The first space has a refractive index of about 1.0 to about 1.5.

In one embodiment, a device is provided. The device includes a substrate. The substrate has a first arrangement of a first plurality of pillars formed thereon. The first arrangement of the first plurality of pillars includes pillars having a height h and a lateral distance d, and a gap g corresponding to a distance between adjacent pillars of the first plurality of pillars. An aspect ratio of the gap g to the height h is between about 1:1 and about 1:20, wherein the gap g is composed of a silica-containing aerogel material with nanoscale porosities within the silica-containing material, the silica-containing aerogel material having a gap-fill portion disposed in the gap g having the aspect ratio. A first encapsulation layer is disposed over the first arrangement of the first plurality of pillars. The first encapsulation layer has a refractive index of about 1.0 to about 1.5. The first encapsulation layer, the substrate, and each of the pillars of the first arrangement define a first space therebetween. The first space has a refractive index of about 1.0 to about 1.5.

In yet another embodiment, a method is provided. The first arrangement of the first plurality of pillars includes pillars having a height h and a lateral distance d, and a gap g corresponding to a distance between adjacent pillars of the first plurality of pillars. An aspect ratio of the gap g to the height h is between about 1:1 and about 1:20. A silica-containing aerogel material is deposited. The depositing the silica-containing aerogel material includes a silica-containing aerogel material formation process to form nanoscale porosities in the silica-containing aerogel material. The silica-containing aerogel material has a gap-fill portion disposed in the gap g having the aspect ratio, and an encapsulate portion disposed over the gap-fill portion and the first arrangement of the first plurality of pillars.

BRIEF DESCRIPTION OF THE DRAWINGS

So that the manner in which the above recited features of the present disclosure can be understood in detail, a more particular description of the disclosure, briefly summarized above, may be had by reference to embodiments, some of which are illustrated in the appended drawings. It is to be noted, however, that the appended drawings illustrate only exemplary embodiments and are therefore not to be considered limiting of its scope, and may admit to other equally effective embodiments.

FIG. **1**A is a schematic, perspective view of a flat optical device according to an embodiment described herein.

FIG. **1**B is a schematic, cross-sectional view of a layer stack according to an embodiment described herein.

FIG. **1**C is a schematic, top view of an arrangement of pillars of a layer stack according to an embodiment described herein.

FIGS. **1**D-**1**F are schematic, cross-sectional views of a layer stack according to embodiments described herein.

FIG. **2** is a flow diagram of a method of forming a flat optical device according to an embodiment described herein.

FIGS. **3**A-**3**D are schematic, cross-sectional views of a substrate during a method of forming a flat optical device according to an embodiment described herein.

FIG. **4**A and FIG. **4**B are flow diagrams of methods of forming a flat optical device according to embodiments described herein.

FIGS. **5**A-**5**G are schematic, cross-sectional views of a substrate during a method of forming a flat optical device according to embodiments described herein.

FIG. **6** is a flow diagram of a method of forming a flat optical device according to an embodiment described herein.

FIGS. **7**A-**7**C are schematic, cross-sectional views of a substrate during a method of forming a flat optical device according to an embodiment described herein.

FIG. **8** is a flow diagram of a method of forming a flat optical device according to an embodiment described herein.

FIGS. **9**A and **9**B are schematic, cross-sectional views of a substrate during a method of forming a flat optical device according to an embodiment described herein.

To facilitate understanding, identical reference numerals have been used, where possible, to designate identical elements that are common to the figures. It is contemplated

that elements and features of one embodiment may be beneficially incorporated in other embodiments without further recitation.

DETAILED DESCRIPTION

Embodiments described herein relate to flat optical devices and methods of forming flat optical devices. One embodiment includes a substrate having a first arrangement of a first plurality of pillars formed thereon. The first arrangement of the first plurality of pillars includes pillars having a height h and a lateral distance d, and a gap g corresponding to a distance between adjacent pillars of the first plurality of pillars. An aspect ratio of the gap g to the height h is between about 1:1 and about 1:20. A first encapsulation layer is disposed over the first arrangement of the first plurality of pillars. The first encapsulation layer has a refractive index of about 1.0 to about 1.5. The first encapsulation layer, the substrate, and each of the pillars of the first arrangement define a first space therebetween. The first space has a refractive index of about 1.0 to about 1.5.

FIG. **1**A is a schematic, perspective view of a flat optical device **100** having at least one layer stack **101**A, **101**B. FIG. **1**B is a schematic, cross-sectional view of the layer stack **101**A. FIG. **1**C is a schematic, top view of an arrangement of pillars **104** of the layer stack **101**A. The flat optical device **100** includes at least one layer stack **101**A, **101**B. While aspects of the devices and methods described herein may be discussed in reference to the layer stack **101**A, it is to be understood that aspects of the devices and methods described herein are similarly applicable to the layer stack **101**B. Reference numerals may be omitted for the arrangement of the layer stack **101**B for clarity in the Figures provided herein.

In one embodiment, which can be combined with other embodiments described herein, the flat optical device **100** is a single layer stack flat optical device that includes the layer stack **101**A. In another embodiment, which can be combined with other embodiments described herein, the flat optical device **100** is a multi-layer stack optical device that includes the layer stack **101**A and one or more layer stacks **101**B. The layer stack **101**A includes an arrangement of a plurality of pillars **104**A disposed on a surface of the substrate **102** and an encapsulation layer **106**A. In the embodiment of the multi-layer stack optical device, the first layer stack of the one or more layer stacks **101**B is disposed over the layer stack **101**A. In one embodiment, which can be combined with other embodiments described herein, the first layer stack of the layer stacks **101**B includes an arrangement of a plurality of pillars **104**B disposed on the encapsulation layer **106**A. In another embodiment, which can be combined with other embodiments described herein, the arrangement of a plurality of pillars **104**B of the first layer stack of the layer stacks **101**B is disposed on a spacer layer (not shown) disposed on the encapsulation layer **106**A. In embodiments including the spacer layer, the spacer layer is operable to provide support for the arrangement of the plurality of pillars **104**B, and is of a specified thickness according to the optical functionality of the flat optical device **100**.

The arrangement of the plurality of pillars **104**A, **104**B includes pillars **104**A, **104**B having a height h and a lateral distance d. The height h of the pillars **104**A is defined as the distance from the surface of the substrate **102** to the encapsulation layer **106**A. The height h of the pillars **104**B is defined as the distance from the encapsulation layer **106**A and a spacer layer (not shown) disposed on the encapsulation layer **106**A to the encapsulation layer **106**B. In another embodiment, which can be combined with other embodiments described herein, the cross-section of the pillars **104**A, **104**B is square and/or rectangular and the lateral distance d of the pillars **104**A, **104**B corresponds to a width of the pillars **104**A, **104**B. In another embodiment, which can be combined with other embodiments described herein, the cross-section of the pillars **104**A, **104**B is circular and the lateral distance d of the pillars **104**A, **104**B corresponds to a diameter of the pillars **104**A, **104**B. The gap g is a distance between adjacent pillars of the pillars **104**A, **104**B. In one embodiment, each of the arrangement of the plurality of pillars **104**A, **104**B has an aspect ratio (g:h) between about 1:1.5 and about 1:10. In another embodiment, each of the arrangement of the plurality of pillars **104**A, **104**B has an aspect ratio (g:h) between about 1:1.5 and about 1:2.5. In yet another embodiment, each of the arrangement of the plurality of pillars **104**A, **104**B has an aspect ratio (g:h) between about 1:1 and about 1:20.

The lateral distance d and the gap g are less than half of a wavelength of operation. The wavelength of operation corresponds to a wavelength or wavelength range. In one example, the wavelength or wavelength range includes one or more wavelengths in the UV region to near-infrared region (i.e., from about 300 nm to about 1500 nm). Therefore, for example, at a wavelength of 700 nm the distance d and the gap g are less than 350 nm. In one embodiment, which can be combined with other embodiments described herein, the lateral distance d of each pillar of the plurality of pillars **104**A is substantially the same. In another embodiment, which can be combined with other embodiments described herein, the lateral distance d of at least one pillar is different than the lateral distance d of additional pillars of the plurality of pillars **104**A. In one embodiment, which can be combined with other embodiments described herein, the gap g of each of the adjacent pillars of the plurality of pillars **104**A is substantially the same. In another embodiment, which can be combined with other embodiments described herein, the gap g of at least one set of adjacent pillars is different that the gap g of additional sets of adjacent pillars of the plurality of pillars **104**A. In some embodiments, which can be combined with other embodiments described herein, the arrangement of the plurality of pillars **104**B corresponds to (i.e., matches) the arrangement of the plurality of pillars **104**A. In other embodiments, which can be combined with other embodiments described herein, the arrangement of the plurality of pillars **104**B does not correspond to the arrangement of the plurality of pillars **104**A.

The substrate **102** may be selected to transmit light at the wavelength of operation. Without limitation, in some embodiments, the substrate **102** is configured such that the substrate **102** transmits greater than or equal to about 50%, 60%, 70%, 80%, 90%, 95%, 99% of the UV region of the light spectrum. The substrate **102** may be formed from any suitable material, provided that the substrate **102** can adequately transmit light of the wavelength of operation and can serve as an adequate support for at least the arrangement of the plurality of pillars **104**A and the encapsulation layer **106**A. In some embodiments, which can be combined with other embodiments described herein, the material of substrate **102** has a refractive index that is relatively low, as compared to the refractive index of materials used in each of the pillars **104**A, **104**B. Substrate selection may include substrates of any suitable material, including, but not limited to, semiconductor, doped semiconductor, amorphous dielectrics, non-amorphous dielectrics, crystalline dielectrics, silicon oxide, polymers, and combinations thereof. In some embodiments, which can be combined with other embodi-

ments described herein, the substrate **102** includes a transparent material. The substrate **102** is transparent with an absorption coefficient less than 0.001. Examples may include, but are not limited to, an oxide, sulfide, phosphide, telluride, and combinations thereof. In one example, the substrate **102** includes silica (SiO_2) containing materials.

The pillars **104**A, **104**B include materials, not limited to, titanium dioxide (TiO_2), zinc oxide (ZnO), tin dioxide (SnO_2), aluminum-doped zinc oxide (AZO), fluorine-doped tin oxide (FTO), cadmium stannate (tin oxide) (CTO), zinc stannate (tin oxide) ($SnZnO_3$), and silicon containing materials. The silicon containing materials may include at least one of silicon nitride (Si_3N_4) or amorphous silicon (a-Si) containing materials. The pillars **104**A, **1046** may have a refractive of about 1.8 or greater, and absorption coefficient less than 0.001. In one embodiment, which can be combined with other embodiments described herein, the refractive index of the encapsulation layer **106**A, **106**B is about 1.0 to about 1.5. The encapsulation layer **106**A, **106**B has an absorption coefficient less than 0.001. In some embodiments, which can be combined with other embodiments described herein, the encapsulation layer **106**A, **106**B and the substrate **102** include substantially the same materials. In one embodiment, the conformal encapsulation layer **306**A has a thickness of about 2 nm to about 100 nm. In another embodiment, the encapsulation layer **106**A has a thickness less than 50 μm. In another embodiment, the encapsulation layer **306**A has a thickness of about 1 μm to about 2 μm.

The materials and dimensions of the encapsulation layer **106**A, **106**B are further described in the methods provided herein. Utilization of the materials, dimensions, and processes described herein of the encapsulation layer **106**A, **106**B, and the composition of a space **108** corresponding to the gap g provides for a height h of the pillars **104**A, **104**B of about 1500 nm or less. In some embodiments, which can be combined with other embodiments described herein, the height h of the pillars **104**A, **104**B is about 500 nm or less. The height h of the pillars **104**A, **104**B reduces the thickness **110**A, **110**B of the layer stack **101**A, **101**B and total thickness of the flat optical device **100**. The reduced total thickness of the flat optical device **100** provides for higher transmission efficiency due to impedance matching and device symmetry, as compared to bare optical devices, and reduced manufacturing complexity and cost.

The composition of the space **108** corresponding to the gap g includes at least one of air, having a refractive index of 1.0 and an absorption coefficient of 0, or a transparent material **107** (shown in FIGS. **1**D-**1**F), having an absorption coefficient less than 0.001. In one embodiment, which can be combined with other embodiments described herein, the refractive index of the transparent material **107** of the composition of the space **108** has a refractive index of about 1.0 to about 1.5. In some embodiments, which can be combined with other embodiments described herein, the transparent material **107** includes one of silica containing materials or non-silica containing materials, such as polymer containing materials, for example, fluoropolymer material. In some embodiments, which can be combined with other embodiments described herein, the transparent material **107** includes fluorine containing materials, such as aluminum fluoride (AlF_3) and magnesium fluoride (MgF_2).

As shown in FIG. **1**D, in one embodiment, which can be combined with other embodiments described herein, the encapsulation layer **106**A of the layer stack **101**A includes the transparent material **107** and the composition of the space **108** includes air (refractive index of 1.0). In some embodiments of the embodiment of FIG. **1**D, the transparent material **107** has the refractive index of about 1.0 to about 1.5. The height h of the pillars **104**A decreases as the refractive index of the transparent material **107** is reduced. One example of the embodiment of FIG. **1**D includes the layer stack **101**A of FIGS. **3**C, **5**D, and **5**F.

As shown in FIG. **1**E, in another embodiment, which can be combined with other embodiments described herein, the encapsulation layer **106**A of the layer stack **101**A includes the transparent material **107** and the composition of the space **108** includes the transparent material **107**. In some embodiments of the embodiment of FIG. **1**E, the transparent material **107** has the refractive index of about 1.0 to about 1.5. The height h of the pillars **104**A decreases as the refractive index of the transparent material **107** is reduced. For example, in some embodiments, the embodiment of FIG. **1**D, with the composition of the space **108** including air, results in a lower height h. One example of the embodiment of FIG. **1**E includes the layer stack **101**A of FIG. **7**B.

As shown in FIG. **1**F, in another embodiment, which can be combined with other embodiments described herein, a conformal encapsulation layer **106**A is disposed over the plurality of pillars **104**A. In some embodiments, the conformal encapsulation layer **106**A fills the space **108**. In other embodiments, the conformal encapsulation layer **106**A does not fill the space **108** such that the composition of the space **108** includes the transparent material **107** and air. In addition to the height h of the pillars **104**A decreasing as the refractive index of the transparent material **107** is reduced, the composition of the space **108** including the transparent material **107** and air may reduce the height h of the pillars **104**A. In some embodiments of the embodiment of FIG. **1**D, the transparent material **107** has the refractive index of about 1.0 to about 1.5. The height h of the pillars **104**A decreases as the refractive index of the transparent material **107** is reduced. One example of the embodiment of FIG. **1**D includes the layer stack **101**A of FIG. **9**B.

In one embodiment, which can be combined with other embodiments described herein, the transparent material **107** of the embodiments of FIGS. **1**D-**1**E includes one of silica containing materials or non-silica containing materials, such as polymer containing materials, for example, fluoropolymer materials. In another embodiment, which can be combined with other embodiments described herein, the transparent material **107** of the embodiments of FIGS. **1**D-**1**E includes a silica-containing aerogel material. The silica-containing aerogel material includes nanoscale porosities to provide air gaps in the space **108**. In one embodiment, which can be combined with other embodiments described herein, the silica-containing aerogel material has a porosity, corresponding to the nanoscale air gaps, of about 95% or greater. The nanoscale porosity of the silica-containing aerogel material reduces the refractive index of silica. The reduced refracted index decreases the height h. The silica-containing aerogel material is hydrophobic to protect the pillars **104**A from external factors.

FIG. **2** is a flow diagram of a method **200** of forming a flat optical device **100**, as shown in FIGS. **3**A-**3**D. At operation **201**, an arrangement of a plurality of pillars **104**A is formed on the surface of the substrate **102**. In one embodiment, which can be combined with other embodiments described herein, forming the arrangement of a plurality of pillars **104**A includes disposing a pillar material **301** over the surface of the substrate **102** and removing portions of the pillar material **301** to form trenches **302**. The trenches **302** correspond to the gap g of the pillars **104**A (including the space **108** of the flat optical device **100**), the remaining

portions of the trenches correspond to the lateral distance d, and the thickness of the pillar material **301** corresponds to the height h.

In one embodiment, which can be combined with other embodiments described herein, the pillar material **301** includes oxides. At optional operation **202**, a liner **304** is disposed over the oxide-free pillars **104**A. The liner **304** protects the pillars **104**A from oxidation from disposing an encapsulation layer **306**A that includes an oxide containing material, such as silica. In one embodiment, which can be combined with other embodiments described herein, the liner **304** has a refractive index of about 1.0 to about 1.5. In one embodiment, which can be combined with other embodiments described herein, the liner **304** has a thickness of about 1 nm to about 100 nm. The liner **304** may be disposed by atomic layer deposition (ALD), such as rapid ALD. In one embodiment, which can be combined with other embodiments described herein, a silica containing liner **304** is conformably disposed over the pillars **104**A by an ALD process that includes alternating flows of TMA ($AlMe_3$) and $(^tButO)_3SiOH$. Each TMA($AlMe_3$) and $(tButO)_3SiOH$ flow cycle forms a sublayer having a thickness of about 12 nm (greater than 32 monolayers).

At operation **203**, an encapsulation layer **306**A, corresponding to the encapsulation layer **106**A, is disposed over the pillars **104**A. Disposing the encapsulation layer **306**A may include, but is not limited to, chemical vapor deposition (CVD), plasma enhanced CVD (PECVD), ALD, rapid ALD, spray coating, or spin coating. In one embodiment, which can be combined with other embodiments described herein, the encapsulation layer **306**A has a thickness of about 1 μm to about 10 μm. In another embodiment, which can be combined with other embodiments described herein, the encapsulation layer **306**A has a thickness of about 1 μm to about 2 μm. Operations **201**-**203** form a single layer stack flat optical device **100** that includes the layer stack **101**A. At operation **204**, at least operations **201**-**203** are repeated at least once to form a multi-layer stack optical device having the layer stack **101**A and at least one layer stack **101**B. The layer stack **101**B includes at least the encapsulation layer **306**A, the arrangement of a plurality of pillars **104**B, and the encapsulation layer **306**B. The arrangement of a plurality of pillars **104**B formed via operation **201** is disposed on one of the encapsulation layer **306**A and a spacer layer (not shown) disposed on the encapsulation layer **306**A.

FIG. **4**A is a flow diagram of a method **400**A of forming a flat optical device **100**, as shown in FIGS. **5**A-**5**E. FIG. **4**B is a flow diagram of a method **400**B of forming a flat optical device **100**, as shown in FIGS. **5**A-**5**E. At operation **401**A, **401**B of the method **400**A and the method **400**B, as described in operation **201** of the method **200**, an arrangement of a plurality of pillars **104**A is formed on the surface of the substrate **102**. At operation **402**A, a sacrificial material **504**A to be removed is deposited in the trenches **302**. In one embodiment, which can be combined with other embodiments described herein, the sacrificial material **504**A is deposited by hot-wire CVD (HWCVD), PECVD, or inductively coupled (ICPCVD). At operation **402**B, a gap-fill material **504**B to be reduced in area is deposited in the trenches **302**.

At operation **403**A, **403**B, an encapsulation layer **306**A, corresponding to the encapsulation layer **106**A, is disposed over the pillars **104**A and one of the sacrificial material **504**A and gap-fill material **504**B. Disposing the encapsulation layer **306**A may include, but is not limited to, no-flow chemical vapor deposition (CVD), ALD, rapid ALD, PECVD, spray coating, or spin coating. At operation **404**A, the sacrificial material **504**A is removed. In one embodiment, which can be combined with other embodiments described herein, the sacrificial material is removed via thermal annealing. At operation **404**B, the gap-fill material **504**B is reduced by an area **506** in the space **108** such that the gap g includes the gap-fill material **504**B with a center air gap **503** disposed in the area **506**. In one embodiment, which can be combined with other embodiments described herein, the gap-fill material **504**B is reduced via thermal curing, such thermal curing, chemical reduction, and UV treatment, such as UV curing. Operations **401**A-**404**A, **401**B-**404**B, form a single layer stack flat optical device **100** that includes the layer stack **101**A. At operation **405**A,**405**B, operations **401**A-**404**A, **401**B-**404**B are repeated at least once to form a multi-layer stack optical device having the layer stack **101**A and at least one layer stack **101**B. The layer stack **101**B includes at least the encapsulation layer **306**A, the arrangement of a plurality of pillars **104**B, and the encapsulation layer **306**B.

FIG. **6** is a flow diagram of a method **600** of forming a flat optical device **100**, as shown in FIGS. **7**A-**7**C. At operation **601**, as described in operation **201** of the method **200**, an arrangement of a plurality of pillars **104**A is formed on the surface of the substrate **102**. At operation **602**, a silica-containing aerogel material **702**A is disposed over the plurality of pillars **104**A. Operations **601** and **602**, form a single layer stack flat optical device **100** that includes the layer stack **101**A. A gap-fill portion **704**A, of the silica-containing aerogel material **702**A, is disposed in the trenches **302** correspond to the gap g of the pillars **104**A (including the space **108** of the flat optical device **100**). An encapsulate portion **706**A of the silica-containing aerogel material **702**A, is disposed over the plurality of pillars **104**A and the gap-fill portion **704**A. The encapsulate portion **706**B corresponds to the encapsulation layer **306**B.

At operation **603**, operations **601** and **602** are repeated at least once to form a multi-layer stack optical device having the layer stack **101**A and at least one layer stack **101**B. The layer stack **101**B includes at least the encapsulation layer **306**A, the arrangement of a plurality of pillars **104**B, and the encapsulation layer **306**B. The arrangement of a plurality of pillars **104**B formed via operation **601** is disposed on one of the encapsulation layer **306**A and a spacer layer (not shown) disposed on the encapsulation layer **306**A. The encapsulate portion **706**B of the silica-containing aerogel material **702**B corresponds to the encapsulation layer **306**B. The gap-fill portion **704**B of the silica-containing aerogel material **702**B is disposed in the trenches **302**. In one embodiment, which can be combined with other embodiments described herein, the encapsulation layer **306**A, **306**B (i.e., the encapsulate portion **706**A, **706**B) has a thickness of about 1 μm to about 2 μm. The silica-containing aerogel has a refractive index of about 1.0 to about 1.10 and a transmission coefficient less than 0.001. The silica-containing aerogel material includes nanoscale porosities to provide air gaps in the space **108**. In one embodiment, which can be combined with other embodiments described herein, the silica-containing aerogel material has a porosity, corresponding to the nanoscale air gaps, of about 95% or greater. The nanoscale porosity of the silica-containing aerogel material reduces the refractive index of solid silica.

The silica-containing aerogel material is formed from a silica-containing aerogel material formation process. The formation process includes a precursor preparation process, deposition process, or supercritical drying process. The precursor preparation process includes preparing silica sol-gels. The sol (i.e., solution) is prepared by addition of a

catalyst to a silica precursor solution in a solvent. Examples of the silica precursor include, but are not limited to, tetraethylorthosilicate (TEOS), tetramethylorthosilicate (TMOS), methyltrimethoxysilane (MTMS), methyltriethoxysilane (MTMS), methyltriethoxysilane (MTES), silbond H-5, or polyethoxydisiloxane (PEDS). Examples of the catalyst include, but are not limited to, hydrofluoric acid (HF), hydrogen chloride (HCl), nitric acid (HNO_3), sulfuric acid (H_2SO_4), oxalic acid ($C_2H_2O_4$), acetic acid (CH_3COOH), trifluoroacetic acid (TFA), or ammonium hydroxide (NH_4OH). Examples of the solvent precursor include, but are not limited to, methanol, ethanol, and isopropanol. The gel is prepared by ageing the solution which strengthens the solution into a sol-gel by crosslinking. The ageing of the sol-gel keeps the shrinkage during drying to the supercritical drying process.

The deposition process includes disposing the sol-gel via one of spin-coating, dip-coating, or spray-coating. In one embodiment, which can be combined with other embodiments described herein, during the deposition process the substrate **102** is rotated (i.e., spun) about a central axis **103** of the substrate. The substrate **102** is rotated about a central axis **103** such that the aspect ratio of the arrangements of the plurality of pillars **104**A, **104**B, is between about 1:1.5 and about 1:10, between 1:1.5 and 1:2.5, or between about 1:1.1 and about 1:20. Trenches **302** are filled by the gap-fill portion **704**A, **704**B, of the silica-containing aerogel material **702**A, **702**B, to be disposed. The rotation rate may be varied during the deposition process. In one embodiment, which can be combined with other embodiments described herein, the rotation rate during the formation of the encapsulate portion **706**A, **706**B, is lower that the rotation rate for the gap-fill portion **704**A, **704**B. The drying process removes the solvent to form the silica-containing aerogel material having nanoscale porosities providing air gaps in the space **108**. In one embodiment, which can be combined with other embodiments described herein, the drying process includes, but is not limited to, one or more of supercritical CO_2 drying, freeze drying, and pressure drying, such as ambient pressure drying.

FIG. **8** is a flow diagram of a method **800** of forming a flat optical device **100**, as shown in FIGS. **9**A and **9**B. At operation **801**, as described in operation **201** of the method **200**, an arrangement of a plurality of pillars **104**A is formed on the surface of the substrate **102**. At operation **802**, a conformal encapsulation layer **306**A is disposed over the plurality of pillars **104**A. Disposing the conformal encapsulation layer **306**A may include, but is not limited to, CVD, PECVD, ALD, rapid ALD, and thermal oxidation. In one embodiment, the conformal encapsulation layer **306**A has a thickness of about 2 nm to about 100 nm. In another embodiment, the encapsulation layer **306**A has a thickness less than 50 μm. In another embodiment, the encapsulation layer **306**A has a thickness of about 1 μm to about 2 μm. In one embodiment, which can be combined with other embodiments described herein, the refractive index of the conformal encapsulation layer **306**A is about 1.0 to about 1.5.

In summation, embodiments described herein provide flat optical devices and methods of forming flat optical devices. One embodiment of the optical devices is a single layer stack flat optical device that includes one layer stack. The layer stack includes a first arrangement of a first plurality of pillars disposed on a surface of a substrate and a first encapsulation layer. Another embodiment of the optical devices is a multi-layer stack optical device that includes the first layer stack and a second layer stack formed thereover. The second layer stack of the one or more layer stacks is disposed over the first layer stack. The second layer stack includes second arrangement of a second plurality of pillars disposed on one of the first encapsulation layer and a spacer layer disposed on the first encapsulation layer. The materials, dimensions, and processes described herein of the encapsulation layers, and the composition of a space corresponding to a gap g provides for a height h of the pillars of about 1500 nm or less, and in some embodiments 500 nm or less. The height h of the pillars reduces the thickness of the layer stacks and total thickness of a flat optical device. The reduced total thickness of the flat optical devices provides for higher transmission efficiency due to impedance matching and device symmetry, as compared to bare optical devices, and reduced manufacturing complexity and cost.

While the foregoing is directed to embodiments of the present disclosure, other and further embodiments of the disclosure may be devised without departing from the basic scope thereof, and the scope thereof is determined by the claims that follow.

What is claimed is:

1. A flat optical device, comprising:

a substrate, the substrate having a first arrangement of a first plurality of pillars formed thereon, the first arrangement of the first plurality of pillars comprising:

pillars having a height h and a lateral distance d;

a gap g corresponding to a distance between adjacent pillars of the first plurality of pillars, and

a silica-containing aerogel material having an absorption coefficient less than 0.001 only disposed in each gap g; and

a first encapsulation layer disposed on the first arrangement of the first plurality of pillars, the first encapsulation layer is disposed on a top surface of each pillar of the first plurality of pillars and on the silica-containing aerogel material disposed in each gap g, the first encapsulation layer having a refractive index of about 1.0 to about 1.5.

2. The flat optical device of claim **1**, wherein the silica-containing aerogel material has nanoscale porosities formed therein.

3. The flat optical device of claim **2**, wherein the silica-containing aerogel material and the first encapsulation layer consist of substantially the same materials.

4. The flat optical device of claim **1**, wherein the gap g has an air gap disposed in a center opening of the silica-containing aerogel material.

5. The flat optical device of claim **1**, wherein a liner is disposed over the pillars.

6. The flat optical device of claim **5**, wherein the liner has a thickness of about 1 nanometer (nm) to about 200 nm.

7. The flat optical device of claim **1**, further comprising:

a second arrangement of a second plurality of pillars formed over the first encapsulation layer, the second arrangement of the second plurality of pillars comprising:

pillars having the height h and the lateral distance d;

the gap g corresponding to the distance between adjacent pillars of the second plurality of pillars, and

a silica-containing aerogel material having an absorption coefficient less than 0.001 only disposed in each gap g; and

a second encapsulation layer disposed on the second arrangement of the second plurality of pillars, the second encapsulation layer is disposed on a top surface of each pillar of the second plurality of pillars and on the silica-containing aerogel material disposed in each

gap g, the second encapsulation layer having the refractive index of about 1.0 to about 1.5 .

8. The flat optical device of claim **1**, wherein the pillars comprise one or more of titanium dioxide (TiO_2), zinc oxide (ZnO), tin dioxide (SnO_2), aluminum-doped zinc oxide (AZO), fluorine-doped tin oxide (FTO), cadmium stannate (tin oxide) (CTO), zinc stannate (tin oxide) ($SnZnO_3$), or silicon containing materials.

9. The flat optical device of claim **1**, wherein the fist encapsulation material comprises a lower surface, wherein the lower surface is disposed on a top surface of each pillar of the first plurality of pillars and each gap, and wherein the lower surface is planar over the top surface.

10. A flat optical device, comprising:

a substrate, the substrate having a first arrangement of a first plurality of pillars formed thereon, the first arrangement of the first plurality of pillars comprising:
pillars having a height h and a lateral distance d; and
a gap g corresponding to a distance between adjacent pillars of the first plurality of pillars, wherein each gap g is composed of only a silica-containing aerogel material with nanoscale porosities within the silica-containing material, the silica-containing aerogel material having:
an absorption coefficient less than 0.001; and

a first encapsulation layer disposed on the first arrangement of the first plurality of pillars, the first encapsulation layer is disposed on a top surface of each pillar of the first plurality of pillars and on the silica-containing aerogel material disposed in each gap g, the first encapsulation layer having a refractive index of about 1.0 to about 1.5.

11. The flat optical device of claim **10**, wherein the gap is less than 350 nanometers (nm).

12. The flat optical device of claim **10**, wherein the height h is about 1500 nm or less.

13. The flat optical device of claim **10**, wherein the first encapsulation layer has a thickness less than 50 micrometers (μm).

14. The flat optical device of claim **10**, further comprising:

a second arrangement of a second plurality of pillars formed over the first encapsulation layer, the second arrangement of the second plurality of pillars comprising:
pillars having the height h and the lateral distance d;
the gap g corresponding to the distance between adjacent pillars of the second plurality of pillars, and
a silica-containing aerogel material having an absorption coefficient less than 0.001 only disposed in each gap q; and

a second encapsulation layer disposed on the second arrangement of the second plurality of pillars, the second encapsulation layer is disposed over a top surface of each pillar of the second plurality of pillars and on the silica-containing aerogel material disposed in each gap g, the second encapsulation layer having the refractive index of about 1.0 to about 1.5 .

15. The flat optical device of claim **10**, wherein the pillars comprise one or more of titanium dioxide (TiO_2), zinc oxide (ZnO), tin dioxide (SnO_2), aluminum-doped zinc oxide (AZO), fluorine-doped tin oxide (FTO), cadmium stannate (tin oxide) (CTO), zinc stannate (tin oxide) ($SnZnO_3$), or silicon containing materials.

* * * * *