US012225641B2

(12) **United States Patent**
Cervera et al.

(10) **Patent No.: US 12,225,641 B2**
(45) **Date of Patent: Feb. 11, 2025**

(54) **BAKE DEVICES FOR HANDLING AND UNIFORM BAKING OF SUBSTRATES**

(71) Applicant: **Applied Materials, Inc.**, Santa Clara, CA (US)

(72) Inventors: **Hiram Cervera**, Santa Clara, CA (US); **Yongan Xu**, Santa Clara, CA (US); **Ludovic Godet**, Sunnyvale, CA (US)

(73) Assignee: **Applied Materials, Inc.**, Santa Clara, CA (US)

(*) Notice: Subject to any disclaimer, the term of this patent is extended or adjusted under 35 U.S.C. 154(b) by 664 days.

(21) Appl. No.: **17/119,377**

(22) Filed: **Dec. 11, 2020**

(65) **Prior Publication Data**

US 2021/0195695 A1 Jun. 24, 2021

Related U.S. Application Data

(60) Provisional application No. 62/951,909, filed on Dec. 20, 2019.

(51) **Int. Cl.**

H05B 3/74	(2006.01)
F27D 5/00	(2006.01)
H05B 3/28	(2006.01)
H05B 3/62	(2006.01)

(52) **U.S. Cl.**

CPC ***H05B 3/748*** (2013.01); ***F27D 5/00*** (2013.01); ***H05B 3/283*** (2013.01); ***H05B 3/62*** (2013.01)

(58) **Field of Classification Search**

CPC .. F27D 5/00; H05B 3/283; H05B 3/62; H05B 3/748

See application file for complete search history.

(56) **References Cited**

U.S. PATENT DOCUMENTS

6,407,368	B1	6/2002	Hsu et al.	
2001/0010307	A1 *	8/2001	Saito	C30B 31/12 219/390
2003/0183614	A1	10/2003	Yamaguchi et al.	
2004/0163683	A1 *	8/2004	Sugimoto	H01L 21/67034 134/148
2006/0011605	A1	1/2006	Lee et al.	

(Continued)

FOREIGN PATENT DOCUMENTS

JP	2006339485	A	12/2006
KR	10-0273809	B1	10/2002

(Continued)

OTHER PUBLICATIONS

International Search Report/Written Opinion issued to PCT/US2020/064524 on Apr. 9, 2021.

(Continued)

Primary Examiner — Nathaniel E Wiehe
Assistant Examiner — Theodore J Evangelista
(74) *Attorney, Agent, or Firm* — Patterson + Sheridan, LLP

(57) **ABSTRACT**

Embodiments of the present disclosure relate to bake apparatuses for handling and uniform baking of substrates and methods for the handling and the uniform baking of substrates. The bake apparatuses allow the substrates to be heated to a temperature greater than 50° C. without bowing of about 1 mm to about 2 mm from the edge of the substrates to the center of the substrates. The bake apparatuses heat the substrates uniformly or substantially uniformly to improve substrate quality.

16 Claims, 7 Drawing Sheets

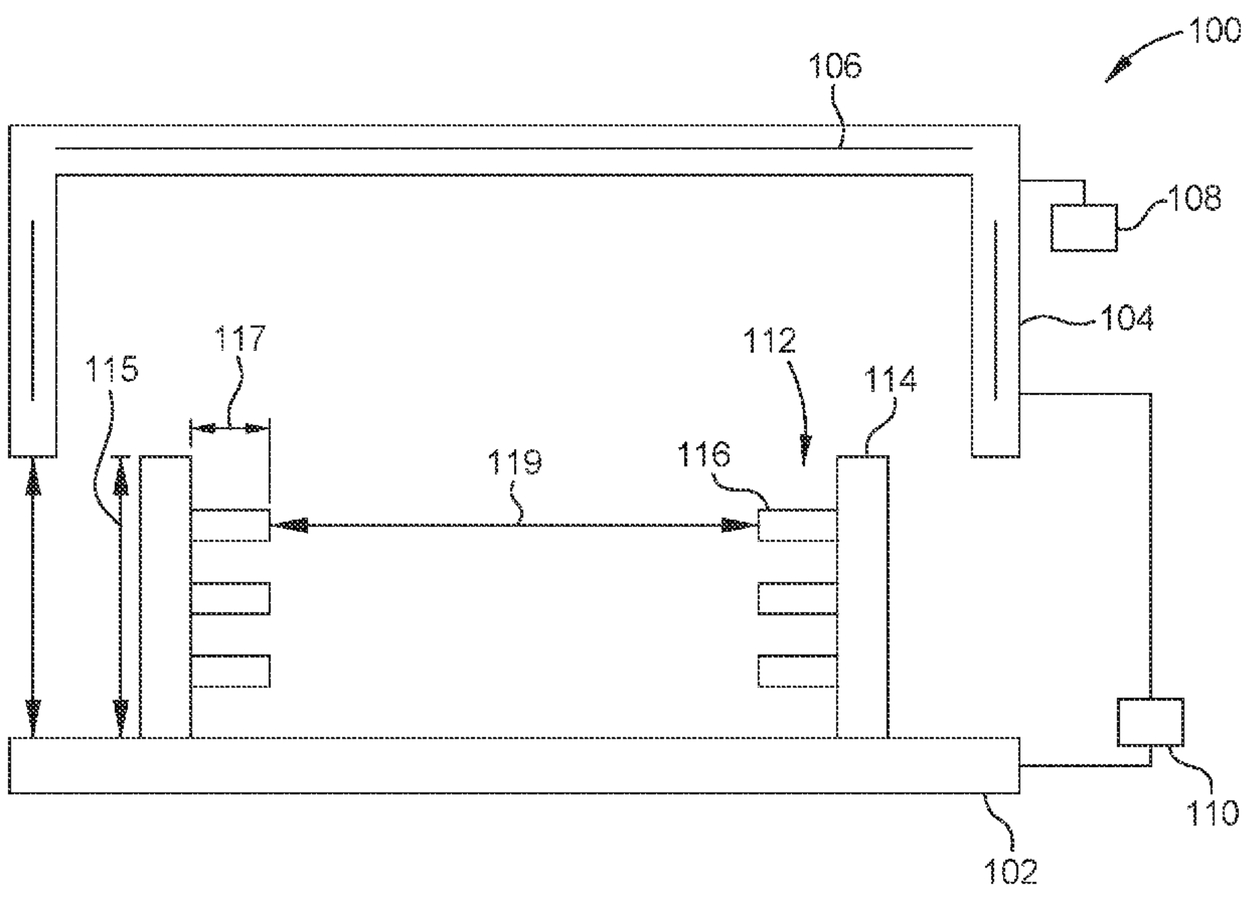

(56) **References Cited**

U.S. PATENT DOCUMENTS

2006/0156979	A1*	7/2006	Thakur	C23C 16/45546 438/476
2007/0076345	A1*	4/2007	Bang	H01L 21/67259 361/234
2007/0131990	A1*	6/2007	Jang	H01L 21/67778 257/291
2008/0199818	A1	8/2008	Nitadori et al.	
2008/0203084	A1	8/2008	Yamaga	
2013/0052599	A1	2/2013	Toyozawa	
2017/0371245	A1	12/2017	Lee et al.	
2018/0174868	A1	6/2018	Sugihara	
2018/0315626	A1*	11/2018	Franklin	H01L 21/67126

FOREIGN PATENT DOCUMENTS

KR	10-2004-0046085	A *	6/2004	
KR	10-1605721	B1	3/2016	
TW	200416773	A	9/2004	
WO	2016199769	A1	12/2016	
WO	WO-2019032486	A1 *	2/2019	H01L 24/11

OTHER PUBLICATIONS

European Search Report issued to Patent Application No. 20902948.7 on May 28, 2024.

Japanese Office Action issued to patent application No. 2022-536759 on Oct. 22, 2024.

Taiwan Office Action issued to patent application No. 109144214 on Oct. 22, 2024.

* cited by examiner

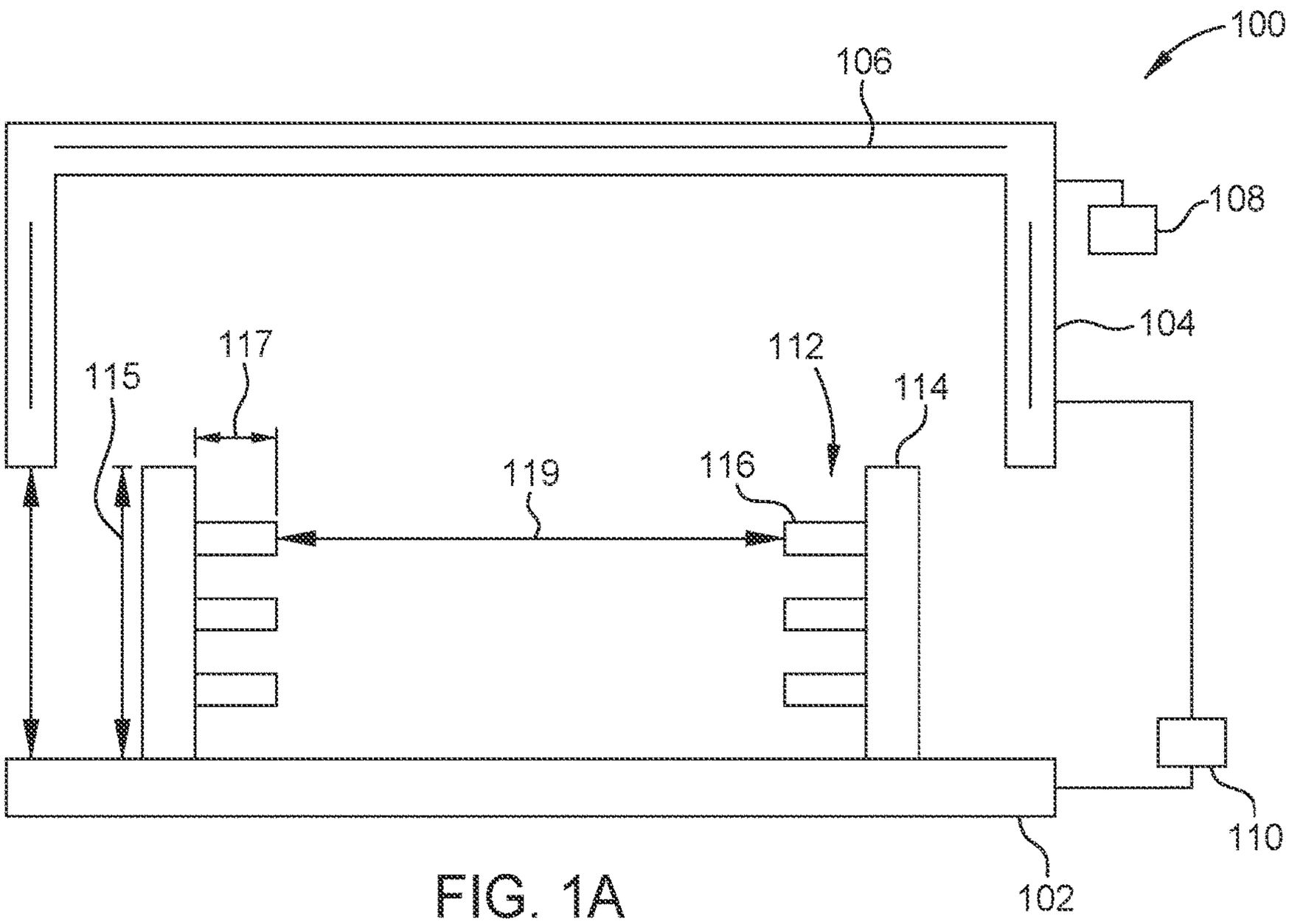
100
106
108
104
117
115
112
114
119
116
110
102

FIG. 1A

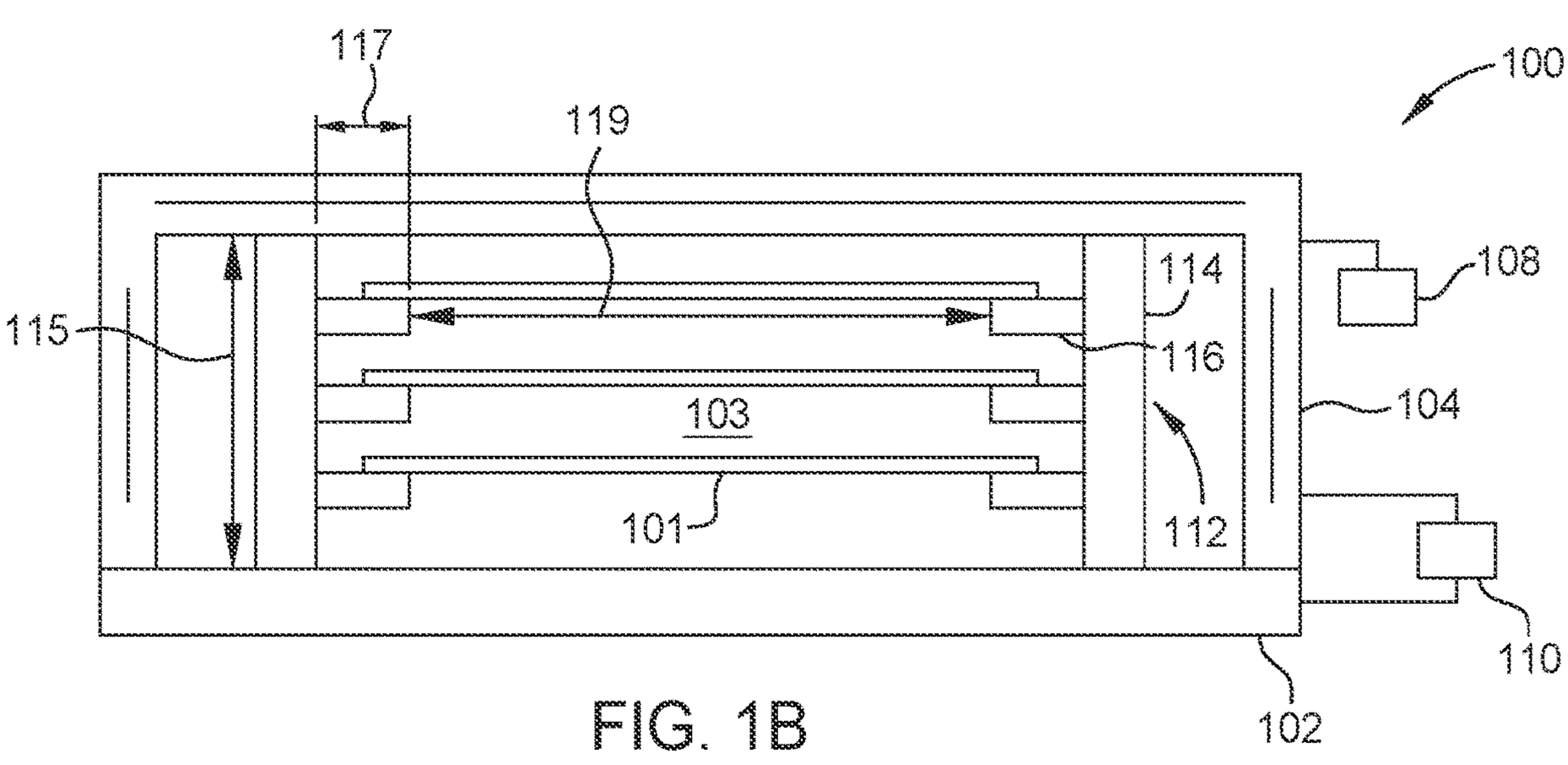
117
119
100
115
114
108
116
104
103
101
112
110
102

FIG. 1B

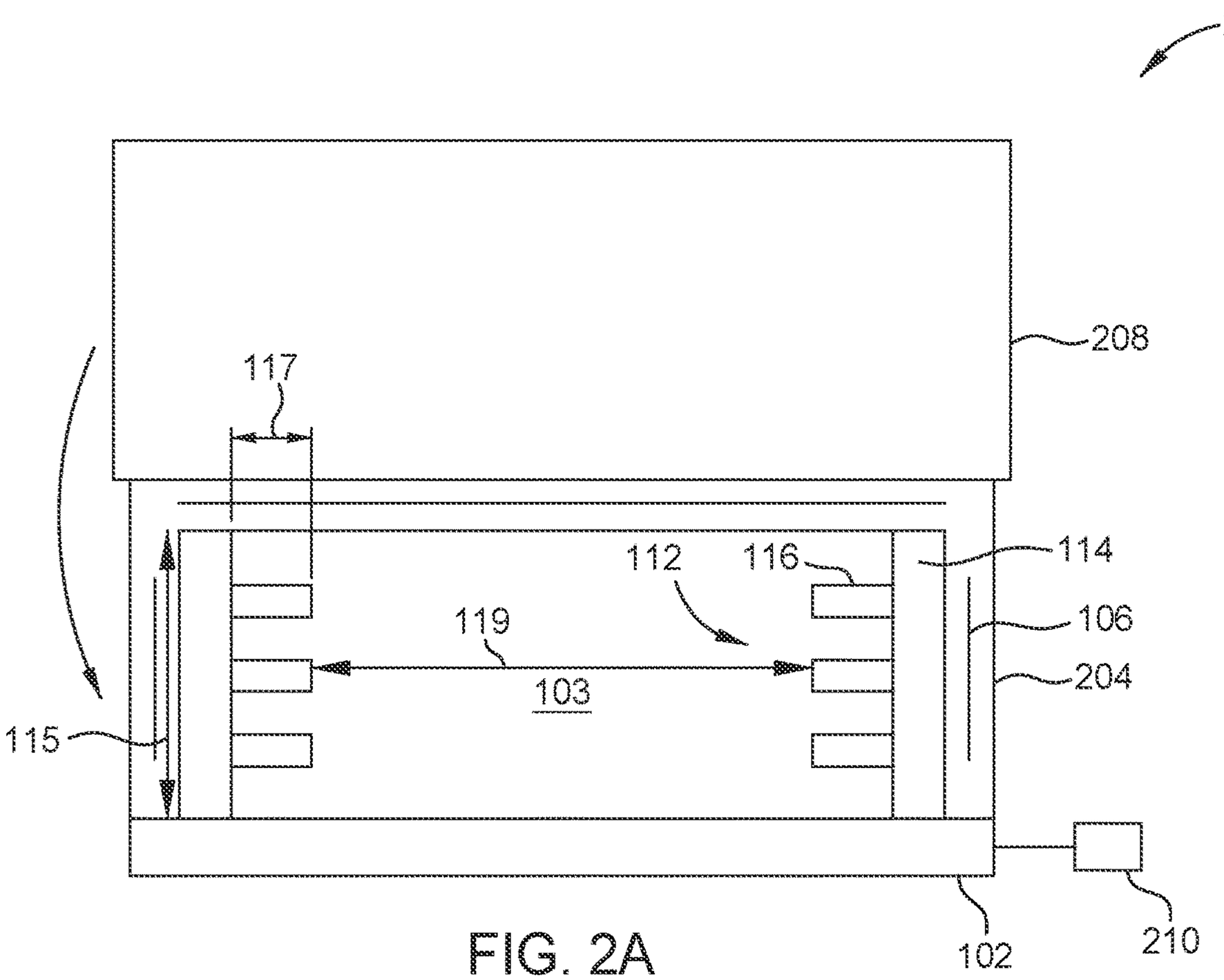
200
208
117
112
116
114
119
106
204
103
115
102
210

FIG. 2A

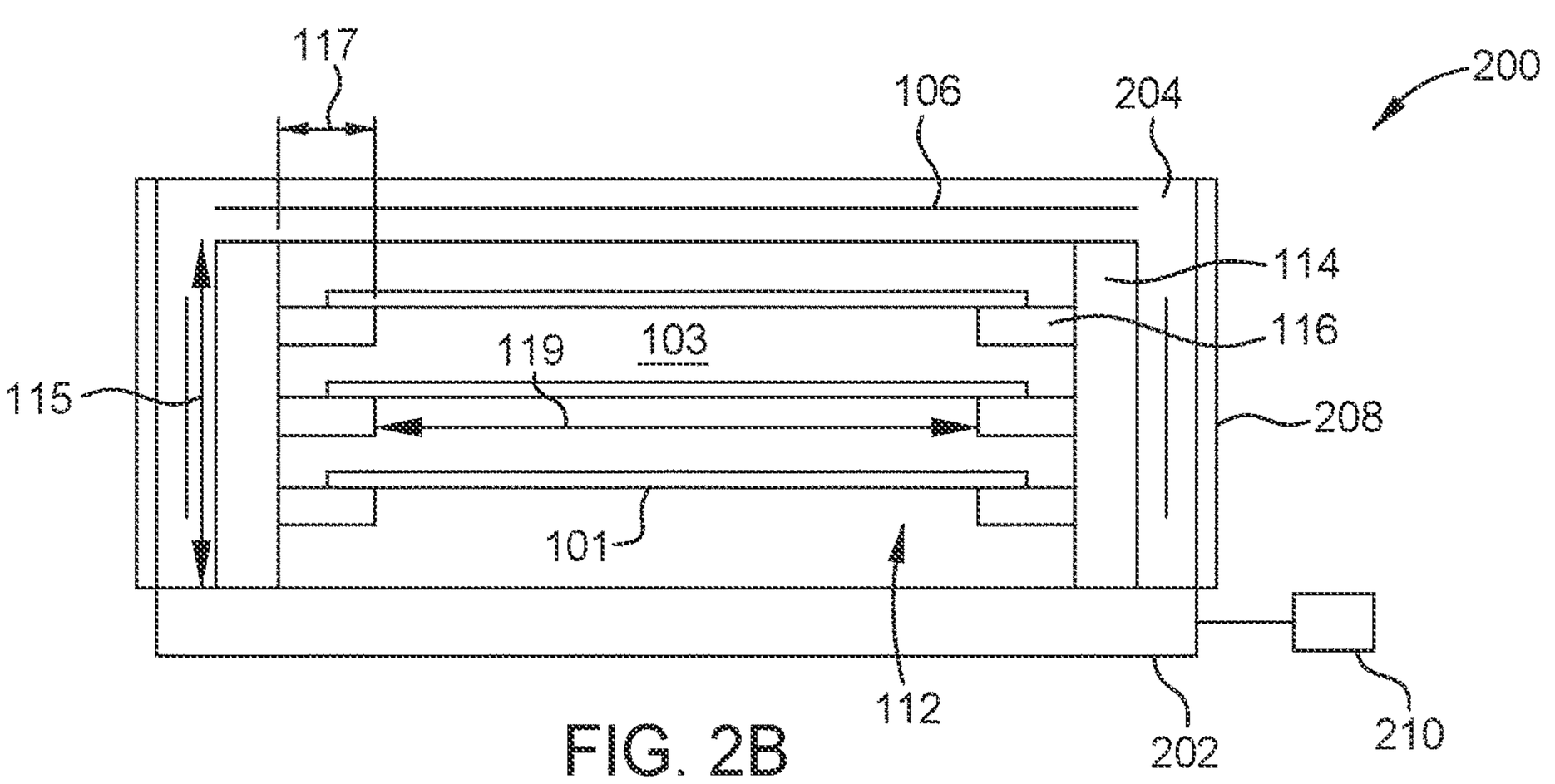
117
106
204
200
114
116
119
103
115
208
101
112
202
210

FIG. 2B

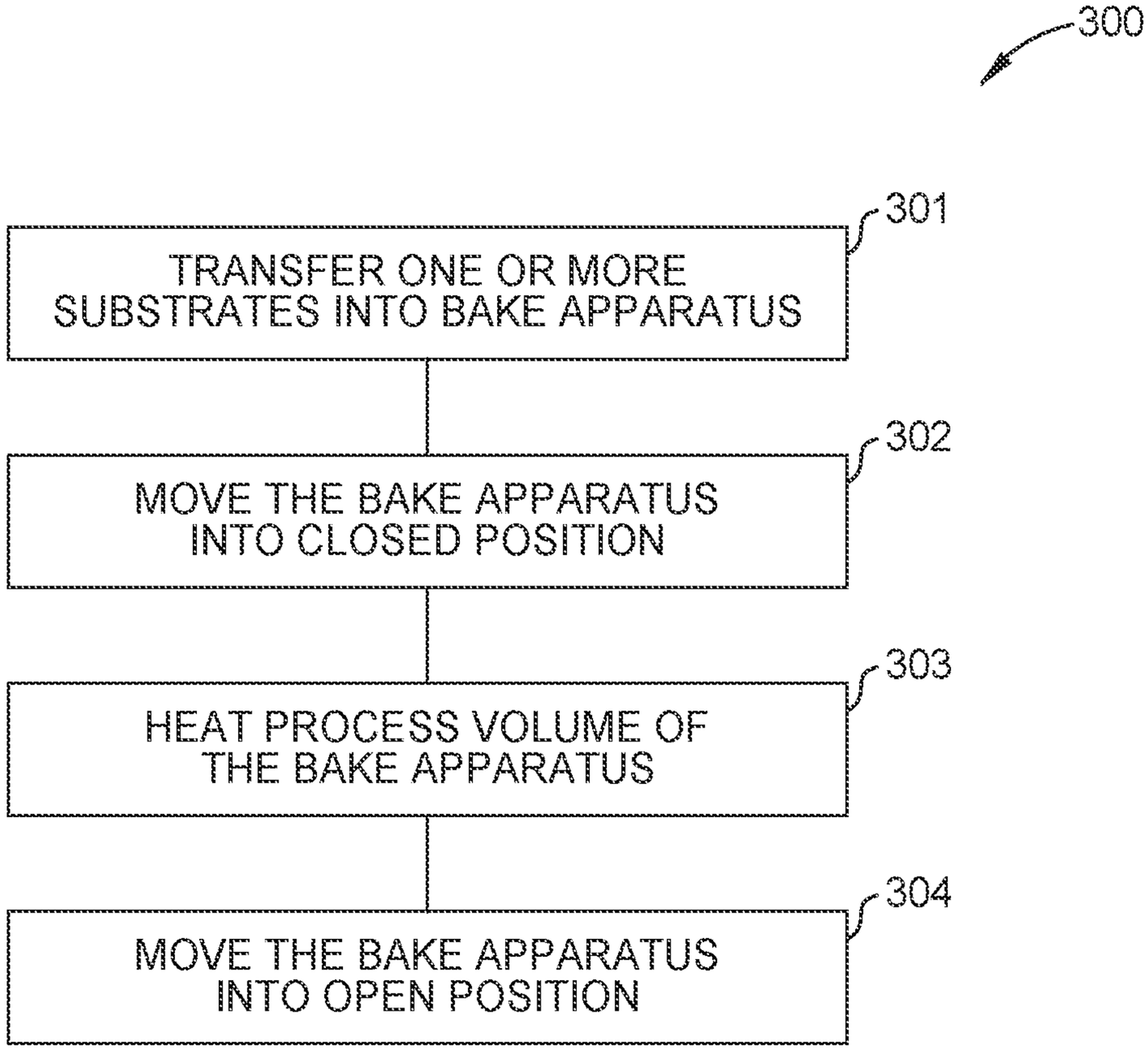
300
TRANSFER ONE OR MORE SUBSTRATES INTO BAKE APPARATUS
301
MOVE THE BAKE APPARATUS INTO CLOSED POSITION
302
HEAT PROCESS VOLUME OF THE BAKE APPARATUS
303
MOVE THE BAKE APPARATUS INTO OPEN POSITION
304

FIG. 3

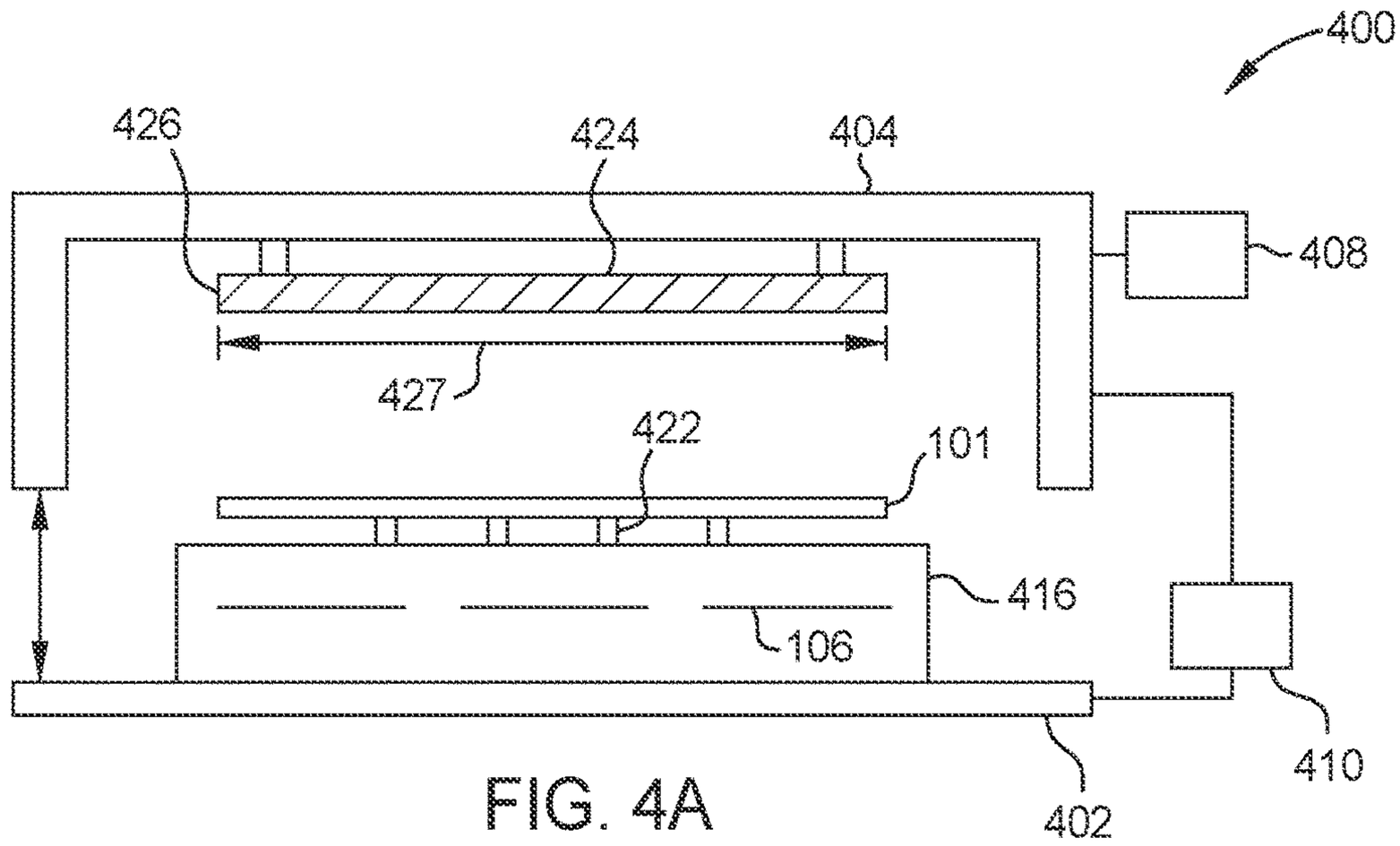

FIG. 4A

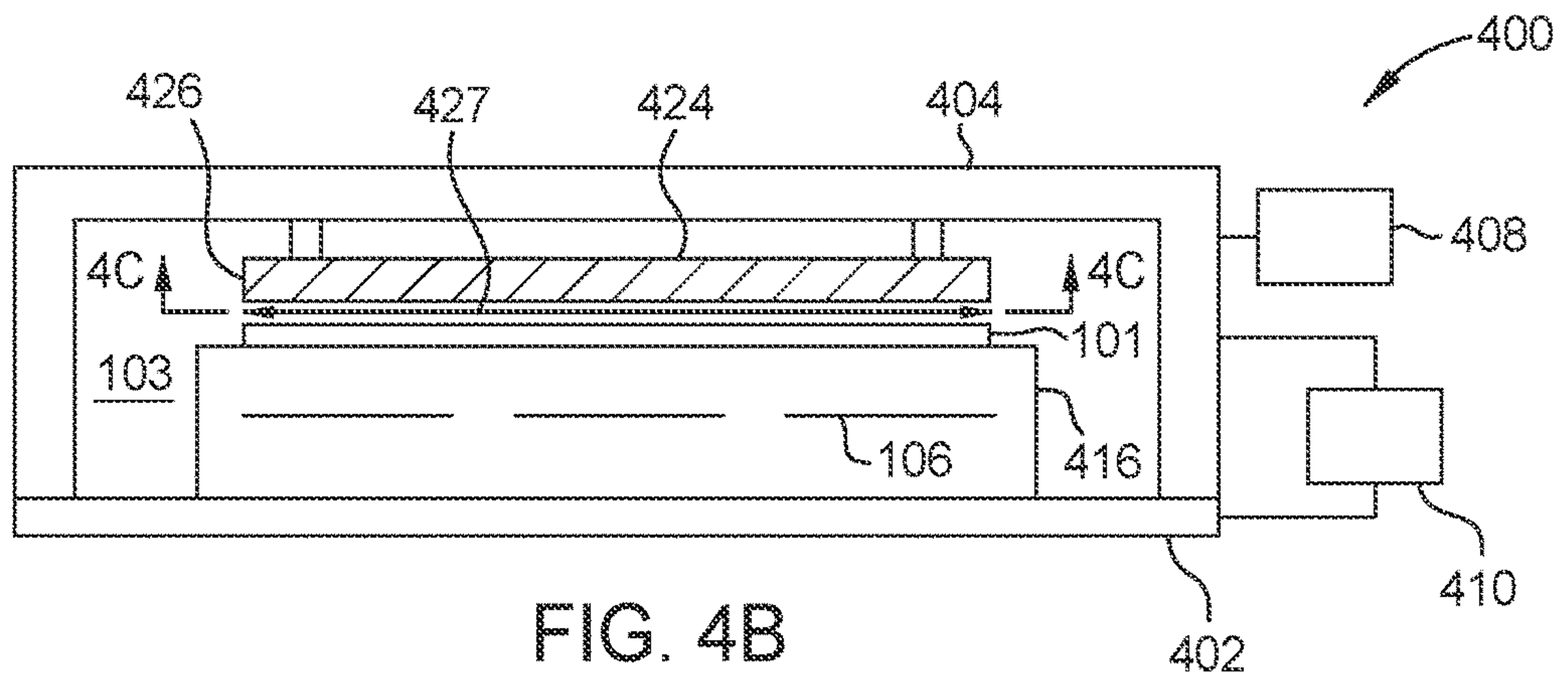

FIG. 4B

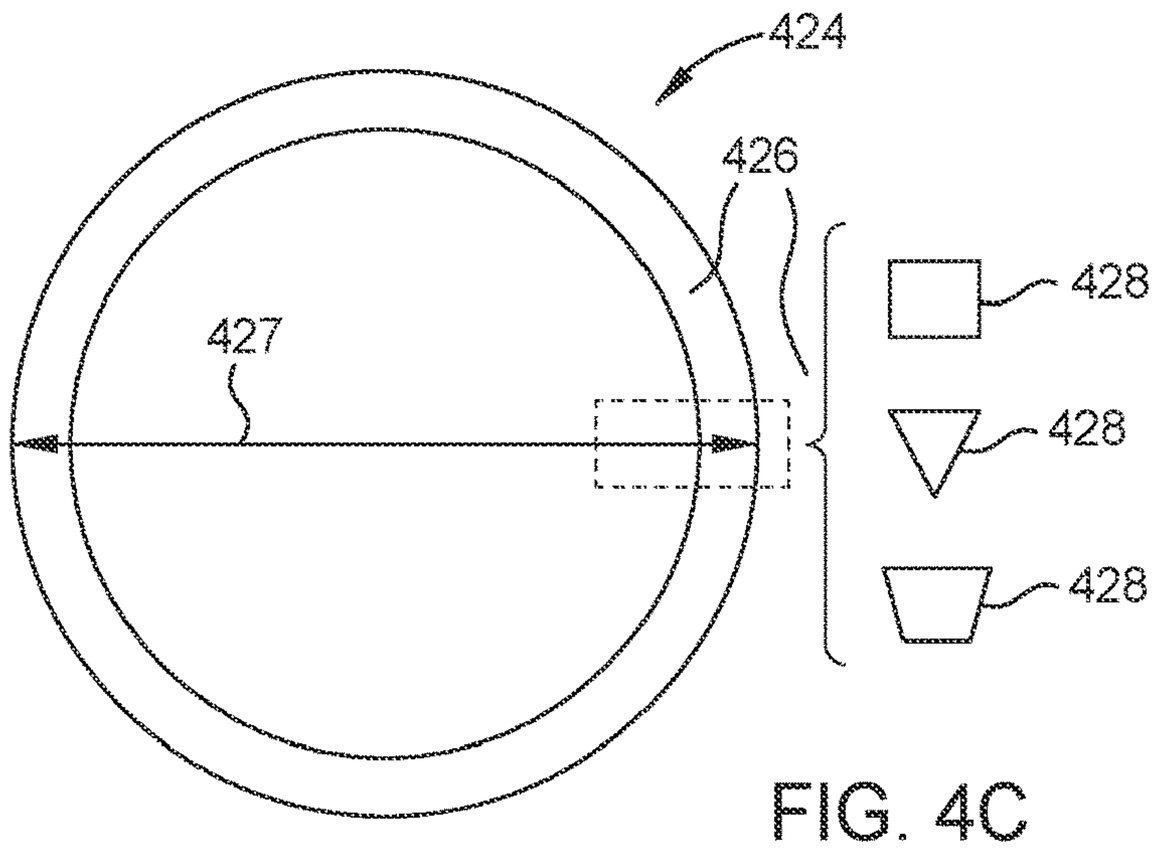

FIG. 4C

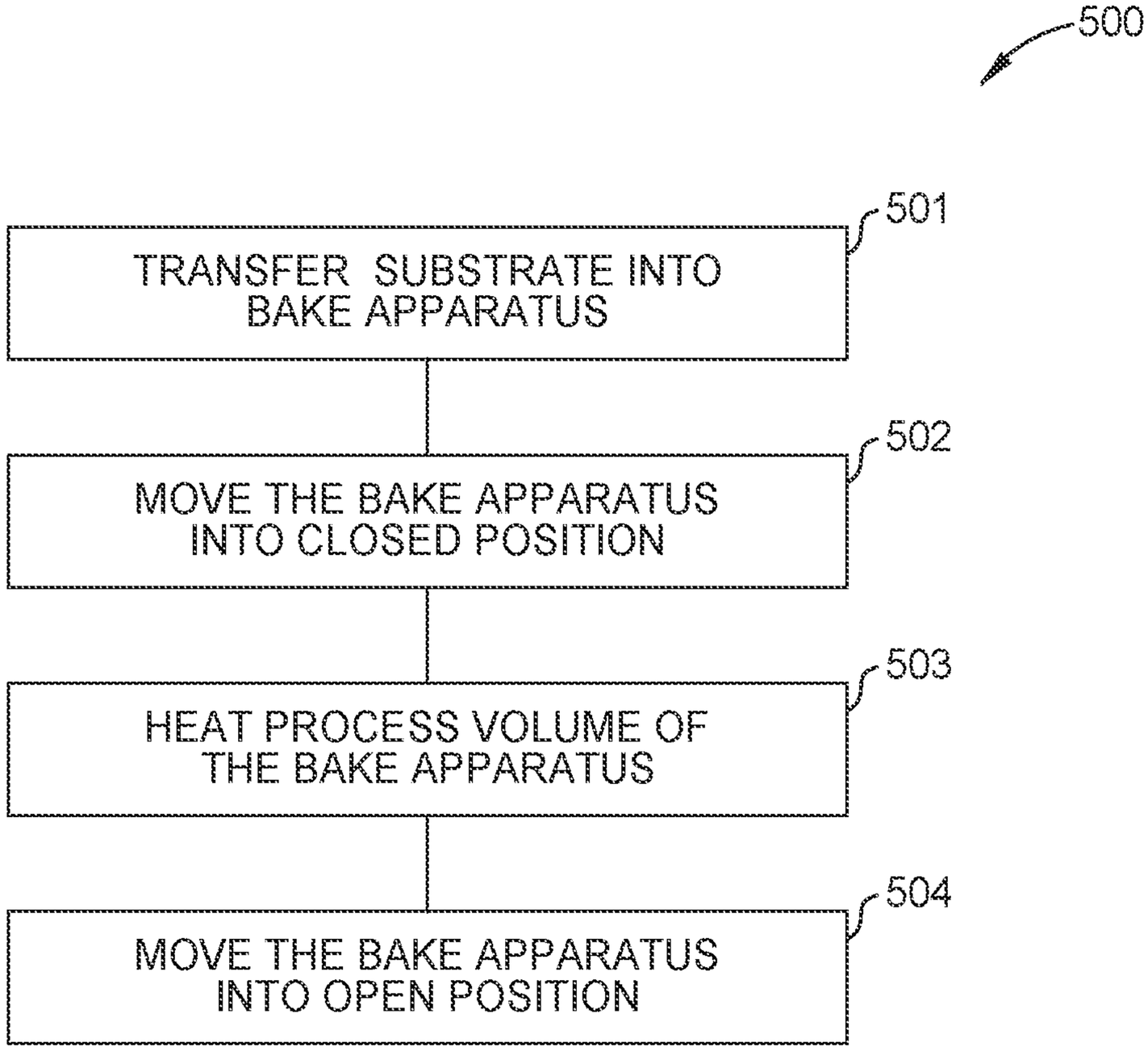
500
TRANSFER SUBSTRATE INTO BAKE APPARATUS
501
MOVE THE BAKE APPARATUS INTO CLOSED POSITION
502
HEAT PROCESS VOLUME OF THE BAKE APPARATUS
503
MOVE THE BAKE APPARATUS INTO OPEN POSITION
504

FIG. 5

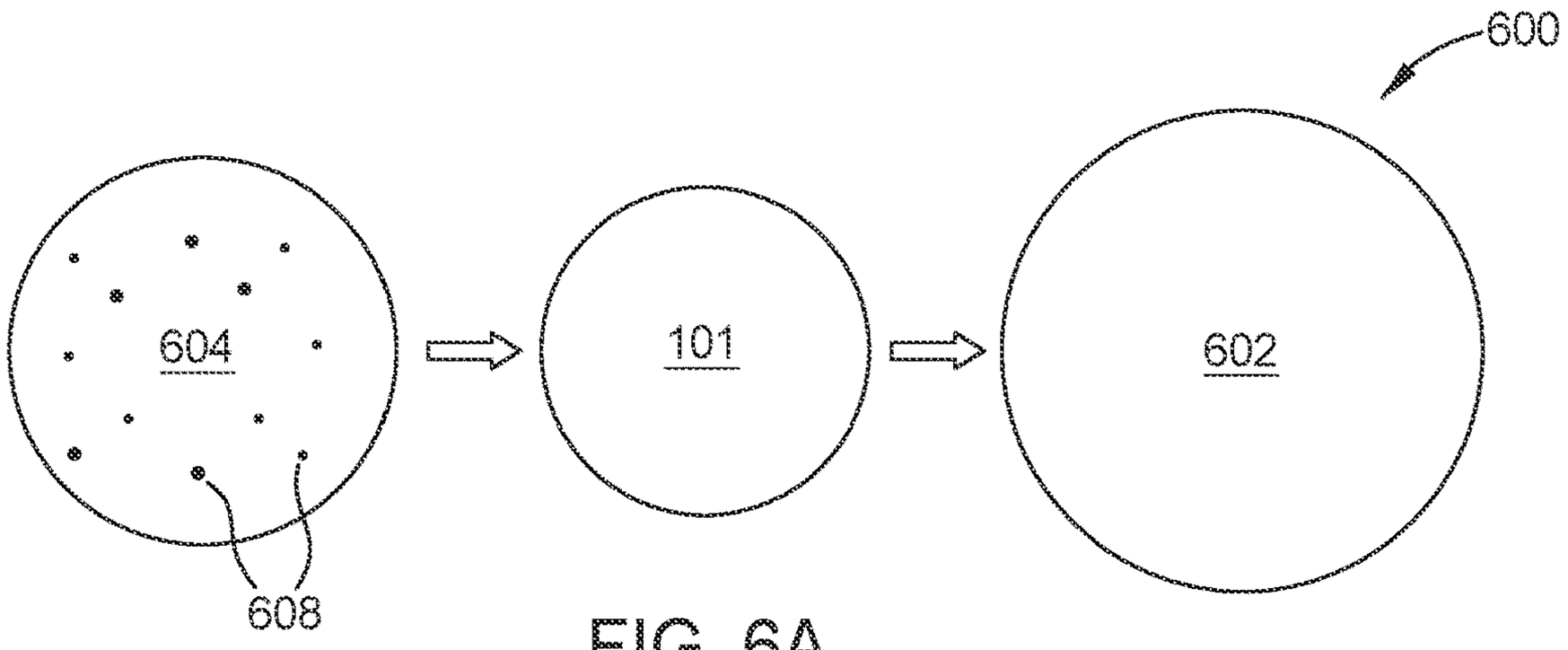

FIG. 6A

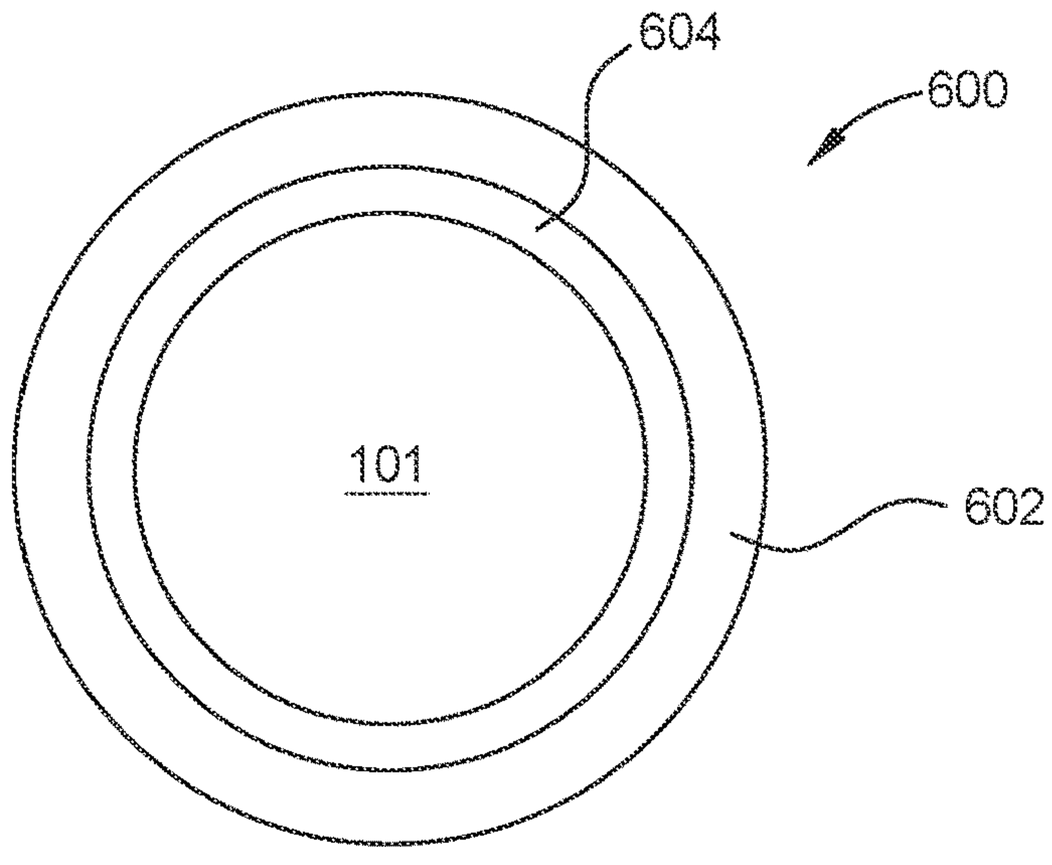

FIG. 6B

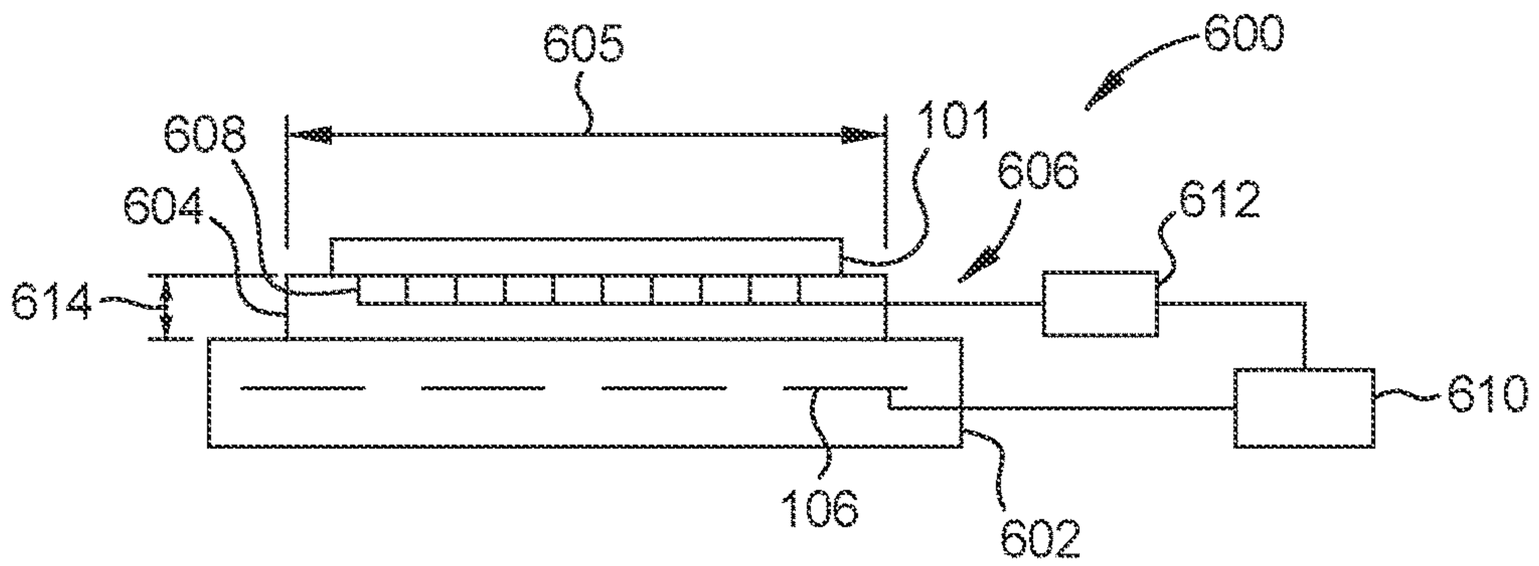

FIG. 6C

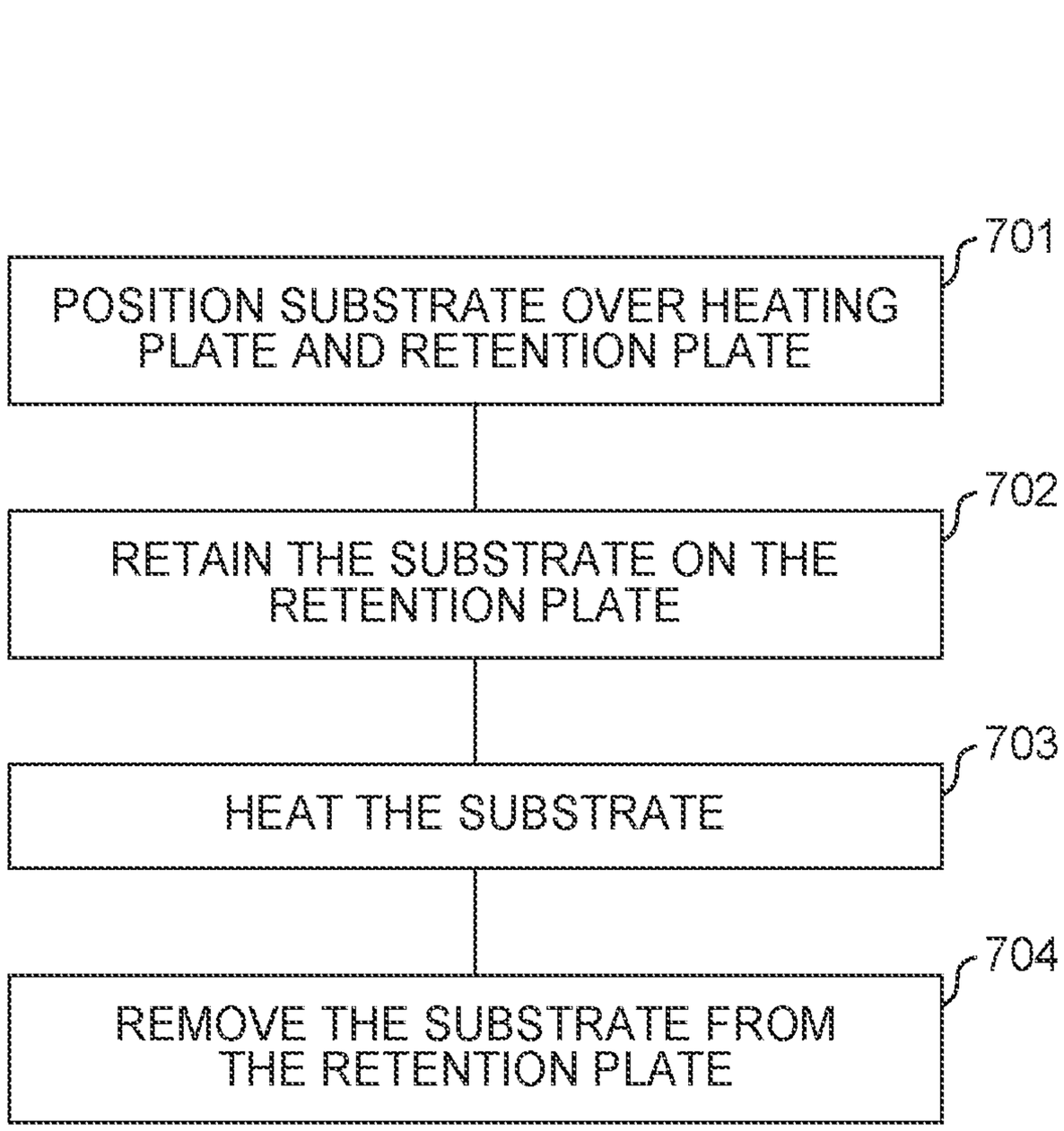
700
POSITION SUBSTRATE OVER HEATING PLATE AND RETENTION PLATE
701
RETAIN THE SUBSTRATE ON THE RETENTION PLATE
702
HEAT THE SUBSTRATE
703
REMOVE THE SUBSTRATE FROM THE RETENTION PLATE
704

FIG. 7

BAKE DEVICES FOR HANDLING AND UNIFORM BAKING OF SUBSTRATES

CROSS-REFERENCE TO RELATED APPLICATIONS

This application claims benefit of U.S. Provisional Patent Application Ser. No. 62/951,909, filed Dec. 20, 2019, which is herein incorporated by reference.

BACKGROUND

Field

Embodiments of the present disclosure generally relate to bake apparatuses for handling and uniform baking of substrates and methods for the handling and uniform baking of substrates.

Description of the Related Art

In the manufacture of optical devices, substrates may be heated to a temperature greater than 50 degrees Celsius (° C.), such as about 50° C. to about 300° C. Substrates, such as glass substrates, may include one or more materials that cause the substrates to bow at temperatures greater than 50° C. The one or more materials may be materials having a refractive index greater than 1.5. A substrate having a refractive index greater than 1.5 when heated to a temperature greater than 50° C. may have bowing of about 1 millimeter (mm) to about 2 mm from the edge of the substrate to the center of the substrate. Therefore, when disposed on a heated substrate support (such as a vacuum chuck, electrostatic chuck, or other substrate support operable to retain the substrate and heat the substrate via heating elements disposed therein) the edge of the substrate may not be retained on the heated substrate support resulting in non-uniform temperature across the surface of the substrate.

During, for example, post-apply baking (PAB) the non-uniform temperature across the surface of the substrate may cause non-uniform removal of solvents from a resist material disposed on the surface of the substrate resulting in a non-uniform resist layer. During, for example, post-exposure baking (PEB) the non-uniform temperature across the surface of the substrate may result in a non-uniform development (e.g., patterning) of the resist layer. Accordingly, what is needed in the art are bake apparatuses for handling and uniform baking of substrates and methods for the handling and the uniform baking of substrates.

SUMMARY

In one embodiment, an apparatus is provided. The apparatus includes a substrate holding assembly disposed on a base. The substrate holding assembly includes two or more shafts. Each shaft of the two or more shafts has extensions disposed thereon. The extensions of each shaft of the two or more shafts are operable to support one or more substrates disposed between the one or more shafts. The apparatus further includes a lid. The lid includes one or more heating elements disposed therein. The apparatus further includes a process volume formed between the lid and the base.

In another embodiment, an apparatus is provided. The apparatus includes a substrate support disposed on a base. The substrate support includes one or more heating elements and lift pins operable to support a substrate. The apparatus further includes a lid. The lid includes an edge brace coupled thereon. The edge brace includes a ring. The apparatus further includes a process volume formed between the lid and the base.

In yet another embodiment, a method is provided. The method includes disposing one or more substrates on a substrate holding assembly of a bake apparatus. The method further includes lowering a lid of the bake apparatus to form a process volume in the bake apparatus. The method further includes heating the process volume with one or more heating elements of the bake apparatus. The heating elements heat the one or more substrates uniformly or substantially uniformly.

BRIEF DESCRIPTION OF THE DRAWINGS

So that the manner in which the above recited features of the present disclosure can be understood in detail, a more particular description of the disclosure, briefly summarized above, may be had by reference to embodiments, some of which are illustrated in the appended drawings. It is to be noted, however, that the appended drawings illustrate only exemplary embodiments and are therefore not to be considered limiting of its scope, and may admit to other equally effective embodiments.

FIGS. **1**A and **1**B are schematic cross-sectional views of a bake apparatus according to an embodiment.

FIGS. **2**A and **2**B are schematic cross-sectional views of a bake apparatus according to an embodiment.

FIG. **3** is a flow diagram of a method for baking one or more substrates in a bake apparatus according to an embodiment.

FIGS. **4**A and **4**B are schematic cross-sectional views of a bake apparatus according to an embodiment.

FIG. **4**C is a schematic bottom view of an edge brace according to an embodiment.

FIG. **5** is a flow diagram of a method for baking a substrate in a bake apparatus according to an embodiment.

FIG. **6**A is a schematic exploded view of a device according to an embodiment.

FIG. **6**B is a schematic top view of a device according to an embodiment.

FIG. **6**C is a schematic cross-sectional views of a device according to an embodiment.

FIG. **7** is a flow diagram of a baking for heating a substrate in a bake apparatus according to an embodiment.

To facilitate understanding, identical reference numerals have been used, where possible, to designate identical elements that are common to the figures. It is contemplated that elements and features of one embodiment may be beneficially incorporated in other embodiments without further recitation.

DETAILED DESCRIPTION

Embodiments of the present disclosure generally relate to bake apparatuses for handling and uniform baking of substrates and methods for the handling and the uniform baking of substrates. The bake apparatuses allow the substrates to be heated to a temperature greater than 50° C. without bowing of about 1 mm to about 2 mm from the edge of the substrates to the center of the substrates. The bake apparatuses heat the substrates uniformly or substantially uniformly to improve substrate quality.

FIGS. **1**A and **1**B are schematic cross-sectional views of a bake apparatus **100**. The bake apparatus **100** includes a base **102**, a lid **104**, and a substrate holding assembly **112**. The substrate holding assembly **112** includes two or more

shafts **114** having one or more extensions **116** coupled thereto. The shafts **114** each have a shaft height **115**. In one embodiment, which can be combined with other embodiments described herein, the shaft height is between about 0.5 inch and about 5 inch.

The one or more extensions **116** of each of the shafts **114** are coupled opposite to each other such that one or more substrates **101** are supported by the extensions **116**. The extension **116** is in contact with portions of the edge of each of the substrates **101**. Although only three pairs of extensions **116** are shown in FIGS. **1**A and **1**B, more or less than three pairs of extensions **116** can be included in the bake apparatus **100**. The number of pairs of extensions **116** corresponds to the number of substrates **101** in the bake apparatus **100**. Each extension **116** has an extension width **117**. The extension widths **117** correspond to the portion of the substrates **101** in contact with the extensions **116**. In one embodiment, which can be combined with other embodiments described herein, the extension width **117** is between about 1 mm and about 10 mm. A width **119** is defined between ends of the extensions **116** disposed opposite one another. The width **119** corresponds to the portion of the substrates **101** not in contact with the extensions **116**. The width **119** is between about 198 mm and about 298 mm. Although only three substrates **101** are shown in FIG. **1**B, the bake apparatus **100** is configurable to hold more than three of the substrates **101**. For example, the bake apparatus **100** is configurable to hold 1 to 5 of the substrates **101**.

In one embodiment, which can be combined with other embodiments described herein, the one or more substrates **101** include one or more materials that are subject to bowing at a temperature greater than 50° C., such as such as about 50° C. to about 300° C. In another embodiment, which can be combined with other embodiments described herein, the one or more substrates **101** include, but are not limited to, at least one of amorphous dielectrics, non-amorphous dielectrics, crystalline dielectrics, silicon oxide, polymers, and combinations thereof. For example, the one or more substrates **101** include at least one of glass, plastic, and polycarbonate materials that are subject to bowing at a temperature greater than 50° C. In yet another embodiment, which can be combined with other embodiments described herein, the one or more substrates **101** include, but are not limited to, at least one of an oxide, sulfide, phosphide, telluride, and combinations thereof. In one example, the substrates **101** include at least one of silicon (Si), silicon dioxide (SiO_2), sapphire, and high-index transparent materials containing materials. In yet another embodiment, which can be combined with other embodiments described herein, the substrates **101** have a refractive index greater than 1.5. In yet another embodiment, which can be combined with other embodiments described herein, the substrates **101** include a glass material having a refractive index greater than 1.5.

In one embodiment, which can be combined with other embodiments described herein, the substrates **101** have a thickness less than about 1 mm. In one embodiment, which can be combined with other embodiments described herein, the substrates **101** have a diameter of about 200 mm. In another embodiment, which can be combined with other embodiments described herein, the substrates **101** have a diameter of about 300 mm. In another embodiment, which can be combined with other embodiments described herein, the substrates **101** have a diameter of about 4 inch to about 12 inch.

The lid **104** includes an actuator **108** operable to raise and lower the lid **104** from a raised position (shown in FIG. **1**A) to a lowered position (shown in FIG. **1**B). The lid **104** in the raised position allows the one or more substrates **101** to be transferred to and from the bake apparatus **100**. In one embodiment, which can be combined with other embodiments described herein, the one or more substrates **101** are transferred to and from the bake apparatus **100** with a transfer robot. The lid **104** in the lowered position contacts the base **102** such that a process volume **103** is formed between the lid **104** and the base **102**. The process volume **103** provides a uniform or substantially uniform temperature distribution inside the process volume of the bake apparatus **100**. The process volume **103** may be heated by various heat sources. In one embodiment, which can be combined with other embodiments described herein, one or more heating elements **106** are disposed in the lid **104**. The one or more heating elements **106** include, but are not limited, to a ceramic heater, a rubber heater, and a fiber glass heater. The heating elements **106** are operable heat the process volume **103** between about 50° C. to about 600° C. The heating elements **106** heat the process volume **103** such that each substrate **101** of the one or more substrates **101** is uniformly or substantially uniformly heated. Additionally, the uniform or substantially uniform temperature distribution inside the process volume **103** exposes each portion of the one or more substrates **101** to the same temperature. For example, the portions of the one or more substrates **101** positioned on the extensions **116** are heated to the same temperature as the portions of the one or more substrates **101** corresponding to the width **119**.

Exposing each portion of the substrates **101** to the same temperature allows the one or more substrates **101** to be heated to the temperature greater than 50° C. without bowing. The bowing of the one or more substrates **101** is generally about 1 mm to about 2 mm from the edge of the substrates **101** to the center of the substrates **101**. During post-apply baking (PAB), for example, the uniform or substantially uniform or substantially uniform temperature across the surface of the one or more substrates **101** provides for a uniform or substantially uniform resist layer over the one or more substrates **101**. During post-exposure baking (PEB), for example, the uniform or substantially uniform temperature across the surface of the one or more substrates **101** provides for a uniform or substantially uniform development (e.g., patterning) of the resist layer over the one or more substrates **101**.

In one embodiment, which can be combined with other embodiments described herein, the temperature the one or more substrates **101** are exposed to in the process volume **103** is increased from about 40° C. to about 800° C. The rapid temperature increase bakes the one or more substrates **101**. In another embodiment, which can be combined with other embodiments described herein, the temperature the one or more substrates **101** are exposed to in the process volume **103** is decreased from about 800° C. to about 40° C. The rapid cooling of the one or more substrates is in preparation of transfer of the one or more substrates out of the process volume **103**. In another embodiment, which can be combined with other embodiments described herein, the temperature the one or more substrates **101** are exposed to in the process volume **103** is maintained during a PEB process at about 80° C. to about 150° C. In yet another embodiment, which can be combined with other embodiments described herein, the temperature the substrates **101** are exposed to in the process volume **103** is maintained during a PAB process at about 80° C. to about 300° C. The embodiments of the bake apparatus **100** of FIGS. **1**A and **1**B include a controller **110** to control operation of the bake apparatus **100** and methods described herein. For example,

the controller **110** is operable to adjust the temperature of the process volume **103** to match the desired temperature of the process volume **103**.

FIGS. **2**A and **2**B are schematic cross-sectional views of a bake apparatus **200**. The bake apparatus **200** includes a base **202**, a lid **204**, and the substrate holding assembly **112** described herein. The lid **204** includes actuated door **208** operable to move from an open position (shown in FIG. **2**A) to a closed position (shown in FIG. **2**B). The lid **204** in the open position allows substrates **101** to be transferred to and from the bake apparatus **200**. In one embodiment, which can be combined with other embodiments described herein, the one or more substrates **101** are transferred to and from the bake apparatus **200** with a transfer robot. The actuated door **208** in the closed position contacts the lid **204** such that a process volume **103** is formed between the lid **204** and the base **202**. The process volume **103** provides the uniform or substantially uniform temperature distribution inside the process volume **103** of the bake apparatus **200**. The process volume **103** may be heated by various heat sources. In one embodiment, which can be combined with other embodiments described herein, the one or more heating elements **106** are disposed in the lid **204**. The one or more heating elements **106** are operable to heat the process volume **103** between about 50° C. to about 600° C. The heating elements **106** heat the process volume **103** such that each substrate **101** of the one or more substrates **101** is equally heated.

In one embodiment, which can be combined with other embodiments described herein, the temperature the one or more substrates **101** are exposed to in the process volume **103** is increased from about 40° C. to about 800° C. In another embodiment, which can be combined with other embodiments described herein, the temperature the one or more substrates **101** are exposed to in the process volume **103** is decreased from about 800° C. to about 40° C. In another embodiment, which can be combined with other embodiments described herein, the temperature the one or more substrates **101** are exposed to in the process volume **103** is maintained during a PEB process at about 80° C. to about 150° C. In yet another embodiment, which can be combined with other embodiments described herein, the temperature the substrates **101** are exposed to in the process volume **103** is maintained during a PAB process at about 80° C. to about 300° C. The embodiments of the bake apparatus **200** of FIGS. **2**A and **2**B include a controller **210** to control operation of the bake apparatus **200** and methods described herein.

FIG. **3** is a flow diagram of a method **300** for baking one or more substrates **101** in the bake apparatus **100** or the bake apparatus **200**. At operation **301**, the one or more substrates **101** are transferred into the bake apparatus **100** or the bake apparatus **200**. Each substrate **101** of the one or more substrates **101** is placed on the extensions **116**. At operation **302**, the bake apparatus **100** or the bake apparatus **200** moves form the open position to the closed position. In one embodiment which can be combined with other embodiments described herein, the lid **104** is lowered by the actuator **108** to the closed position. The lid **104** contacts the base **102** and forms the process volume **103**. In another embodiment, which can be combined with other embodiments described herein, the actuated door **208** is lowered to the closed position. The actuated door **208** contacts the lid **204** and forms the process volume **103**.

At operation **303**, the process volume **103** is heated. The process volume **103** is heated by the one or more heating elements **106**. The one or more heating elements **106** are disposed in the lid **104** or the lid **204**. Each substrate **101** of the one or more substrates **101** is heated equally in the process volume **103** to the desired temperature. The equal heating of the one or more substrates **101** prevents bowing of the one or more substrates **101**. At operation **304**, the bake apparatus **100** or the bake apparatus **200** moves form the closed position to the open position. In one embodiment, which can be combined with other embodiments described herein, the lid **104** is raised by the actuator **108** to the open positon (shown in FIG. **1**A). In another embodiment, which can be combined with other embodiments described herein, the actuated door **208** is raised to the open position (shown in FIG. **2**A). The one or more substrates **101** can be transferred out of the process volume **103**. The controller **110** and the controller **210** are in communication with the bake apparatus **100** and the bake apparatus **200**. The controller **110** and the controller **210** control the operation of the method **300** and facilitate the baking process.

FIGS. **4**A and **4**B are schematic cross-sectional views of a bake apparatus **400**. FIG. **4**C is a schematic bottom view of an edge brace **424** of the bake apparatus **400**. The bake apparatus **400** includes a base **402**, a lid **404**, and a substrate support **416**. Substrate support **416** is one of a vacuum chuck, electrostatic chuck, any other substrate support operable to retain substrates **101** described herein. The substrate support **416** is operable to heat a substrate **101** via heating elements **106** disposed therein. The one or more heating elements **106** include, but are not limited to, a ceramic heater, a rubber heater, and a fiber glass heater.

In one embodiment, which can be combined with other embodiments described herein, the temperature the substrate **101** is exposed to by the substrate support **416** is increased from about 40° C. to about 800° C. In another embodiment, which can be combined with other embodiments described herein, the temperature the substrate **101** is exposed to by the substrate support **416** is decreased from about 800° C. to about 40° C. In another embodiment, which can be combined with other embodiments described herein, the temperature the substrate **101** is exposed to by the substrate support **416** is maintained during the PEB process at about 80° C. to about 150° C. In yet another embodiment, which can be combined with other embodiments described herein, the temperature the substrate **101** is exposed to by the substrate support **416** is maintained during the PAB process at about 80° C. to about 300° C.

The lid **404** includes actuator **408** operable to raise and lower the lid **404** from a raised position (shown in FIG. **4**A) to a lowered position (shown in FIG. **4**B). The lid **404** in the raised position allows a substrate **101** to be transferred to and from the bake apparatus **100** and positioned on the substrate support **416**. In one embodiment, which can be combined with other embodiments described herein, the substrate **101** is transferred to and from the bake apparatus **400** with a transfer robot. In one embodiment, which can be combined with other embodiments described herein, the substrate support **416** includes one or more lift pins **422**. The lift pins **422** support the substrate **101**. The lid **404** in the closed position contacts the base **402** such that a process volume **103** is formed between the lid **404** and the base **402**.

In the closed position, a ring **426** of the edge brace **424** contacts edge portions of the substrate **101**. The edge brace **424** is coupled to the lid **404**. The ring **426** of the edge brace **424** contacting the edge portions of the substrate **101** forces the edge portions of the substrate **101** against the surface of the substrate support **416**. The substrate **101** is subjected to a uniform or substantially uniform temperature distribution when the substrate **101** is heated by the substrate support **416**. In one embodiment, which can be combined with other

embodiment described herein, the lift pins **422** are recessed into the substrate support **416** when in the closed position. The lift pins **422** are recessed such that the substrate **101** is in direct contact with the substrate support **416**.

The ring **426** of the edge brace **424** has a ring width **427**. The ring width **427** corresponds to the diameter of the substrate **101**. For example, the ring width **427** is between about 200 mm and about 300 mm. The ring **426** may have different surface profiles **428** that contact the edge portions of the substrate **101** to force the edge portions of the substrate **101** against the surface of the substrate support **416** uniformly or substantially uniformly. The surface profiles **428** include but are not limited to a rectangular, triangular, or trapezoidal shape. The embodiments of the bake apparatus **400** of FIGS. **4**A-**4**C include a controller **410** to control operation of the bake apparatus **400** and methods described herein.

Heating each portion across the surface of the substrate **101** to the same temperature allows the substrate **101** to be heated to a temperature greater than 50° C. The heating elements **106** heat the process volume **103** between about 50° C. to about 600° C. During PAB, for example, the uniform or substantially uniform temperature across the surface of the substrate **101** provides for the uniform or substantially uniform resist layer over the substrate **101**. During PEB, for example, the uniform or substantially uniform temperature across the surface of the substrate **101** provides for the uniform or substantially uniform development (e.g., patterning) of the resist layer over the substrates.

FIG. **5** is a flow diagram of a method **500** for baking one or more substrates **101** in the bake apparatus **400**. At operation **501**, the substrate **101** is transferred into the bake apparatus **400**. The substrate **101** is placed on the substrate support **416**. At operation **502**, the bake apparatus **400** moves from the open position to the closed position. The lid **404** and the ring **426** are lowered. The lid **404** is lowered by the actuator **408** such that the lid **404** contacts the base **402** and forms the process volume **103**. The ring **426** is lowered such that the ring **426** contacts the substrate **101**. At operation **503**, the process volume **103** is heated. The process volume **103** is heated by the one or more heating elements **106** in the substrate support **416**. The substrate **101** is uniformly or substantially uniformly heated in the process volume **103**. The entire surface of the substrate **101** is in contact with the substrate support **416** due to the force applied by the ring **426**. At operation **504**, the lid **404** is raised. The lid **404** is raised by the actuator **408** such that the bake apparatus **400** is in the open position (shown in FIG. **4**A). The substrate **101** can be transferred out of the process volume **103**. The controller **410** controls the operation of the method **500**. The controller **410** is in communication with the lid **404** and the base **402** such that the controller can control the bake apparatus **400** and facilitate the baking process.

FIG. **6**A is a schematic exploded view of a device **600**. FIG. **6**B is a schematic top view of the device **600**. FIG. **6**C is a schematic cross-sectional view of the device **600**. The device **600** includes a retention plate **604** and a heating plate **602**. The retention plate **604** includes, but is not limited to, a conductive material such as ceramic, mica, or a mixture of ceramic and metal materials. The retention plate **604** has a retention plate width **605**. The retention plate width **605** is between about 202 mm and about 350 mm. In one embodiment, which can be combined with other embodiments described herein, a transfer robot positions the substrate **101** on the retention plate **604**. In the embodiment, the retention plate **604** moves on a track and is positioned on the heating plate **602**. In another embodiment, which can be combined with other embodiments described herein, the heating plate **602** moves on a track and is positioned under the retention plate **604**. In the embodiment, which can be combined with other embodiments described herein, the substrate **101** is positioned on the retention plate **604** having the heating plate **602** thereunder. In yet another embodiment, which can be combined with other embodiments described herein, the retention plate **604** and heating plate **602** move on tracks to be properly positioned relative to the other.

The retention plate **604** is one of a vacuum chuck, electrostatic chuck, or any other substrate support operable to retain substrates **101** described herein. In one embodiment, as shown in FIGS. **6**A and **6**C, the retention plate **604** includes a vacuum system **606** having one or more channels **608** connected to a pump **612**. The pump is operable to provide suction through the channels **608** to retain a substrate **101**. The retention plate **604** has a thickness **614** that allows heat provided by the heating plate **602** to dissipate uniformly or substantially uniformly across the retention plate **604**. The thickness **614** is between about 1 cm and about 10 cm. The heating plate **602** is operable to heat a substrate **101** via heating elements **106** disposed therein. The substrate **101** is subjected to a uniform or substantially uniform temperature distribution when the substrate **101** is heated by the retention plate **604**. The vacuum system **606** retains the substrate **101** such that the heating plate **602** is in contact with the entire surface of the substrate **101**. Therefore, the entire surface of the substrate **101** is uniformly or substantially uniformly heated.

As discussed, heating each portion across the surface of the substrate **101** to the same temperature allows the substrate **101** to be heated to the temperature greater than 50° C. without bowing of about 1 mm to about 2 mm from the edge of the substrate **101** to the center of the substrate **101**. In one embodiment, which can be combined with other embodiments described herein, the device **600** can be utilized in the bake apparatus **400**. For example, the retention plate **604** and the heating plate **602** may replace the substrate support **416** of the bake apparatus **400**.

In one embodiment, which can be combined with other embodiments described herein, the temperature the one or more substrates **101** are exposed to in the process volume **103** is increased from about 40° C. to about 800° C. In another embodiment, which can be combined with other embodiments described herein, the temperature the one or more substrates **101** are exposed to in the process volume **103** is decreased from about 800° C. to about 40° C. In another embodiment, which can be combined with other embodiments described herein, the temperature the one or more substrates **101** are exposed to in the process volume **103** is maintained during a PEB process at about 80° C. to about 150° C. In yet another embodiment, which can be combined with other embodiments described herein, the temperature the substrates **101** are exposed to in the process volume **103** is maintained during a PAB process at about 80° C. to about 300° C. The embodiments of the device **600** of FIGS. **6**A-**6**C include a controller **610** to control operation of the device **600** and methods described herein.

FIG. **7** is a flow diagram of a method **700** for heating the substrate **101** in the device **600**. At operation **701**, the substrate **101** is positioned over the heating plate **602** and the retention plate **604**. The heating plate **602** and the retention plate **604** can be positioned relative to each other by moving on tracks. The retention plate **604** is disposed over the heating plate **602**. The substrate **101** is positioned by a transfer robot. At operation **702**, the substrate **101** is retained

on the retention plate **604** by the vacuum system **606**. The vacuum system **606** utilizes the pump **612** to provide suction through the channels **608** to retain the substrate **101** on the retention plate **604**. At operation **703**, the heating plate **602** provides heat to the substrate **101**. The heat from the heating plate **602** passes through the retention plate **604** to heat the substrate **101**. At operation **704**, the substrate **101** is removed from the device **600**. In one embodiment, which can be combined with other embodiments described herein, prior to the operation **703** a ring such as the ring **426** from the bake apparatus **400** is lowered into contact with the substrate **101**. The ring **426** and the vacuum system **606** retain the substrate **101** on the retention plate **604** such that the substrate **101** does not bow. Therefore, the substrate **101** is uniformly or substantially uniformly heated.

In summation, bake apparatuses for handling and uniform or substantially uniform baking of substrates and methods for the handling and the uniform or substantially uniform baking of substrates are described herein. The bake apparatuses allow the substrates to be heated to a temperature greater than 50° C. without bowing of about 1 mm to about 2 mm from the edge of the substrates to the center of the substrates. The bake apparatuses heat the substrates uniformly or substantially uniformly to improve substrate quality.

While the foregoing is directed to examples of the present disclosure, other and further examples of the disclosure may be devised without departing from the basic scope thereof, and the scope thereof is determined by the claims that follow.

What is claimed is:

1. An apparatus, comprising:

a base;

two or more shafts contacting the base of the apparatus, each shaft of the two or more shafts having extensions disposed thereon, the extensions of each shaft of the two or more shafts operable to support one or more substrates disposed between the two or more shafts, each shaft of the two or more shafts having a first end and a second end;

a lid, the lid including one or more heating elements disposed therein, wherein the lid includes one of:

an actuator operable to move the lid from a raised position to a lowered position, the lid in the lowered position contacts the base to form a process volume between the lid and the base, and the second end of the two or more shafts contact the same base as contacted by the lid; and

an actuated door coupled to the lid, the actuated door operable to move from an open position to a closed position, the actuated door in the closed position contacts the lid to form the process volume between the lid, the two or more shafts, and the base, the lid contacts the base and the two or more shafts.

2. The apparatus of claim **1**, wherein the process volume can be heated to a temperature between about 50° C. and about 600° C.

3. The apparatus of claim **1**, wherein the one or more heating elements include a ceramic heater, a rubber heater, and a fiber glass heater.

4. The apparatus of claim **1**, wherein each shaft of the two or more shafts includes 1 to 5 extensions.

5. An apparatus, comprising: a base;

a substrate support disposed on the base, the substrate support including:

one or more heating elements; and

lift pins operable to support a substrate; a lid, the lid including:

an edge brace coupled thereon, the edge brace including a continuous ring extending between the lid and the substrate support, the ring having an inner diameter and an outer diameter, the outer diameter corresponding to the outer diameter of the substrate; and

an actuator operable to move the lid from a raised position to a lowered position to move the ring from a first position overlying the substrate at a first distance from the substrate to a second position overlying the substrate at a second distance from the substrate, wherein the second position is less than the first position; and

a process volume formed between the lid and the base when this lid in the lowered position contacts the base.

6. The apparatus of claim **5**, wherein the apparatus further includes a retention plate disposed on the substrate support.

7. The apparatus of claim **6**, wherein the retention plate includes channels disposed therethrough, the channels in communication with a pump to form a vacuum system.

8. The apparatus of claim **7**, wherein the retention plate includes a ceramic, mica, or a mixture of ceramic and metal materials.

9. The apparatus of claim **8**, wherein the retention plate is positioned relative to the one or more heating elements by tracks.

10. The apparatus of claim **9**, wherein the one or more heating elements is a heating plate.

11. The apparatus of claim **5**, wherein the ring contacts end portions of the substrate when the lid is in the lowered position.

12. A method, comprising:

disposing one or more substrates on extensions of two shafts in a bake apparatus, the extensions of each shaft of the two shafts are operable to support the one or more substrates disposed between the two shafts, the two shafts contact a base of the bake apparatus, each of the two shafts having a first end and a second end;

forming a process volume in the bake apparatus, wherein the forming the process volume includes one of:

moving a lid of the bake apparatus via an actuator between a raised position and a lowered position, the lid in the lowered position contacts the base to form the process volume between the lid and the base, and the second end of the two or more shafts contact the same base as contacted by the lid; and

moving an actuator door coupled to the lid from an open position to a closed position, the closed position contacts the lid to form the process volume between the lid, the two or more shafts, and the base, the lid contacts the base and the two or more shafts; and

heating the process volume with one or more heating elements disposed in the lid of the bake apparatus, the heating elements heating the one or more substrates uniformly or substantially uniformly.

13. The method of claim **12**, further comprising raising the lid of the bake apparatus to remove the one or more substrates.

14. The method of claim **12**, wherein the heating the process volume includes increasing a temperature in the process volume from about 40° C. to about 800° C.

15. The method of claim **12**, wherein the heating the process volume includes decreasing a temperature in the process volume from about 800° C. to about 40° C.

16. The method of claim 12, wherein the heating the process volume includes maintaining a temperature in the process volume at about 80° C. to about 300° C.

* * * * *