US012229940B2

(12) **United States Patent**
Sun et al.

(10) **Patent No.: US 12,229,940 B2**
(45) **Date of Patent: Feb. 18, 2025**

(54) **IN-LINE METROLOGY SYSTEMS, APPARATUS, AND METHODS FOR OPTICAL DEVICES**

(71) Applicant: **Applied Materials, Inc.**, Santa Clara, CA (US)

(72) Inventors: **Yangyang Sun**, San Jose, CA (US); **Jinxin Fu**, Fremont, CA (US); **Kazuya Daito**, Milpitas, CA (US); **Ludovic Godet**, Sunnyvale, CA (US)

(73) Assignee: **Applied Materials, Inc.**, Santa Clara, CA (US)

(*) Notice: Subject to any disclaimer, the term of this patent is extended or adjusted under 35 U.S.C. 154(b) by 315 days.

(21) Appl. No.: **17/492,958**

(22) Filed: **Oct. 4, 2021**

(65) **Prior Publication Data**

US 2022/0122241 A1 Apr. 21, 2022

Related U.S. Application Data

(60) Provisional application No. 63/092,421, filed on Oct. 15, 2020.

(51) **Int. Cl.**
G06T 7/00 (2017.01)
G01J 1/42 (2006.01)
(Continued)

(52) **U.S. Cl.**
CPC ***G06T 7/001*** (2013.01); ***G01J 1/42*** (2013.01); ***G01J 1/44*** (2013.01); ***G01N 21/958*** (2013.01);
(Continued)

(58) **Field of Classification Search**
CPC G06T 7/10; G06T 7/80; G06T 7/90; H04N 23/74; H04N 23/56; H04N 23/90;
(Continued)

(56) **References Cited**

U.S. PATENT DOCUMENTS

6,075,883 A 6/2000 Stern et al.
6,204,955 B1 * 3/2001 Chao G02B 26/0875 359/305
(Continued)

FOREIGN PATENT DOCUMENTS

CN 111487795 A 8/2020
EP 0990891 A1 4/2000
(Continued)

OTHER PUBLICATIONS

Okuda Takahiro et al. Instrument and Method for Measuring Position and Attitude Mar. 24, 2005 AOI Electronics Co Ltd + JP2005077391 (A)—Mar. 24, 2005 paragraphs 14-20, figure 1 English Translation year 2005.*
(Continued)

Primary Examiner — Prabodh M Dharia
(74) *Attorney, Agent, or Firm* — Patterson + Sheridan, LLP

(57) **ABSTRACT**

Embodiments of the present disclosure relate to optical devices for augmented, virtual, and/or mixed reality applications. In one or more embodiments, an optical device metrology system is configured to measure a plurality of first metrics and one or more second metrics for optical devices, the one or more second metrics including a display leakage metric.

20 Claims, 20 Drawing Sheets

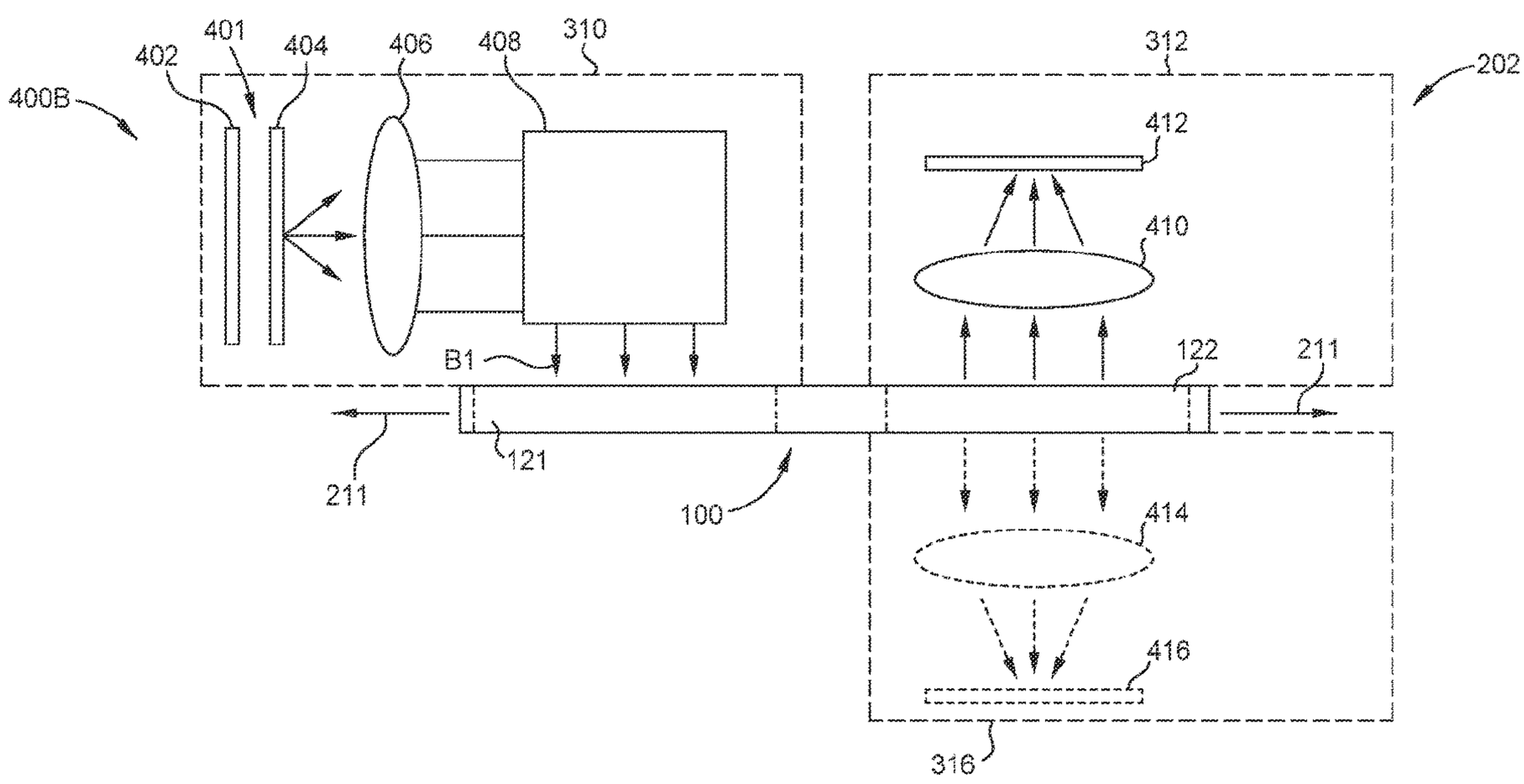

(51) **Int. Cl.**

G01J 1/44	(2006.01)
G01N 21/958	(2006.01)
G02B 27/01	(2006.01)
G06T 7/80	(2017.01)
G06T 7/90	(2017.01)
H04N 23/56	(2023.01)
H04N 23/74	(2023.01)
H04N 23/90	(2023.01)

(52) **U.S. Cl.**

CPC ***G02B 27/0172*** (2013.01); ***G06T 7/80*** (2017.01); ***G06T 7/90*** (2017.01); ***H04N 23/56*** (2023.01); ***H04N 23/74*** (2023.01); ***H04N 23/90*** (2023.01); *G01J 2001/4247* (2013.01); *G01N 2021/9583* (2013.01); *G02B 2027/0112* (2013.01); *G02B 2027/0118* (2013.01); *G02B 2027/0138* (2013.01); *G02B 2027/014* (2013.01); *G06T 2207/10024* (2013.01); *G06T 2207/30108* (2013.01)

(58) **Field of Classification Search**

CPC G01J 1/42; G01J 1/44; G01N 21/958; G02B 27/0172

USPC 382/141; 356/51; 359/305

See application file for complete search history.

(56) **References Cited**

U.S. PATENT DOCUMENTS

2002/0044275	A1	4/2002	Kitabayashi et al.	
2004/0257571	A1	12/2004	Mieher et al.	
2008/0169587	A1*	7/2008	Kihara	B22F 12/45 264/408
2009/0282871	A1	11/2009	Shetterly et al.	
2010/0033708	A1	2/2010	Kriz	
2012/0044344	A1	2/2012	Zheng et al.	
2012/0133756	A1*	5/2012	Levin	G02B 21/12 348/79
2014/0253907	A1	9/2014	Ignatovich et al.	
2014/0368634	A1	12/2014	Pichon et al.	
2015/0109595	A1*	4/2015	Novak	G03F 9/7034 355/55
2015/0160138	A1*	6/2015	Takami	G01N 21/9505 356/51
2018/0003479	A1*	1/2018	Tomatsu	G01B 9/02092
2018/0276811	A1	9/2018	Wen et al.	
2019/0383697	A1*	12/2019	Yang	G02B 13/22
2020/0141802	A1*	5/2020	Fu	G02B 27/0172

FOREIGN PATENT DOCUMENTS

EP	1241461	A2	9/2002
JP	H05-224018	A	9/1993
JP	H0568180	U	9/1993
JP	H0738945	A	2/1995
JP	H09252035	A	9/1997
JP	H11-281526	A	10/1999
JP	2002039910	A	2/2002
JP	2002181657	A	6/2002
JP	2003195247	A	7/2003
JP	2003263627	A	9/2003
JP	2005077391	A	3/2005
JP	2005148655	A	6/2005
JP	2005164488	A	6/2005
JP	2014240832	A	12/2014
JP	2016526185	A	9/2016
JP	2017190972	A	10/2017
KR	1020080083567	A	9/2008
WO	200201206	A1	1/2002
WO	2012009197	A2	1/2012
WO	2013114778	A1	8/2013
WO	2016104223	A1	6/2016
WO	2017134275	A1	8/2017
WO	2018088423	A1	5/2018
WO	2020148574	A1	7/2020

OTHER PUBLICATIONS

Okuda Takahiro et al. Instrument and Method for Measuring Position and Attitude Mar. 24, 2005 AOI Electronics Co Ltd + JP2005077391 (A)—Mar. 24, 2005 paragraphs 14-20, figure 1 Japanese year 2005.*

International Search Report and Written Opinion dated Jan. 20, 2022 for Application No. PCT/US2021/053354.

International Search Report and Written Opinion dated Jan. 28, 2022 for Application No. PCT/US2021/053356.

International Search Report and Written Opinion dated Jan. 10, 2022 for Application No. PCT/US2021/053364.

International Search Report and Written Opinion dated Jan. 3, 2022 for Application No. PCT/US2021/053366.

Rash et al. Eval of Microvision Spectrum SD2500 Helmet-Mounted Display for Air Warrior Block 3 Day-Night HMD Program, USAARL Report No. 2006-08, USAARL Report No. 2006-08.

JP Office Action for Japanese Application No. 2023-522941 dated Jun. 25, 2024.

JP Office Action for Japanese Application No. 2023-522935 dated May 7, 2024.

JP Office Action for Japanese Application No. 2023-552938 dated May 7, 2024.

JP Office Action for Japanese Application No. 2023-522939 dated Jun. 25, 2024.

European Search in related application EP 21 88 0785 dated Aug. 23, 2024.

European Search in related application EP 21 88 0788 dated Aug. 29, 2024.

Kohno Tadayoshi et al.: "Display Leakage and Transparent Wearable Displays: Investigation of Risk, Root Causes, and Defenses", Feb. 1, 2015 (Feb. 1, 2015), XP093008975, https://www.semanticscholar.org/paper/Disp lay-Leakage-and-Transparent-Wearable-Displays%3A-Kohno-Kollin/8699f41446304c3b7466cb77ad085c62da7bdlle Retrieved from the Internet: URL:https://www.rnicrosoft.com/en-US/research/wp-content/uploads/2016/02/paper-13.pdf [retrieved on Dec. 16, 2022].

Office Action in related application JP2023-522935 dated Sep. 10, 2024.

Extended European Search Report in related application EP 21880784 dated Aug. 30, 2024.

Supplementary Search Report in related application EP 21880789 dated Oct. 17, 2024.

Office Action in related application KR 10-2023-7014346 dated Oct. 24, 2024.

Office Action in related application KR 10-2023-7014347 dated Oct. 24, 2024.

Office Action in related application KR 10-2023-7014349 dated Oct. 30, 2024.

Office Action in related application KR 10-2023-7014348 dated Oct. 30, 2024.

JP Office Action for Japanese Application No. 2023-522939 dated Dec. 24, 2024.

JP Office Action for Japanese Application No. 2023-522941 dated Dec. 24, 2024.

* cited by examiner

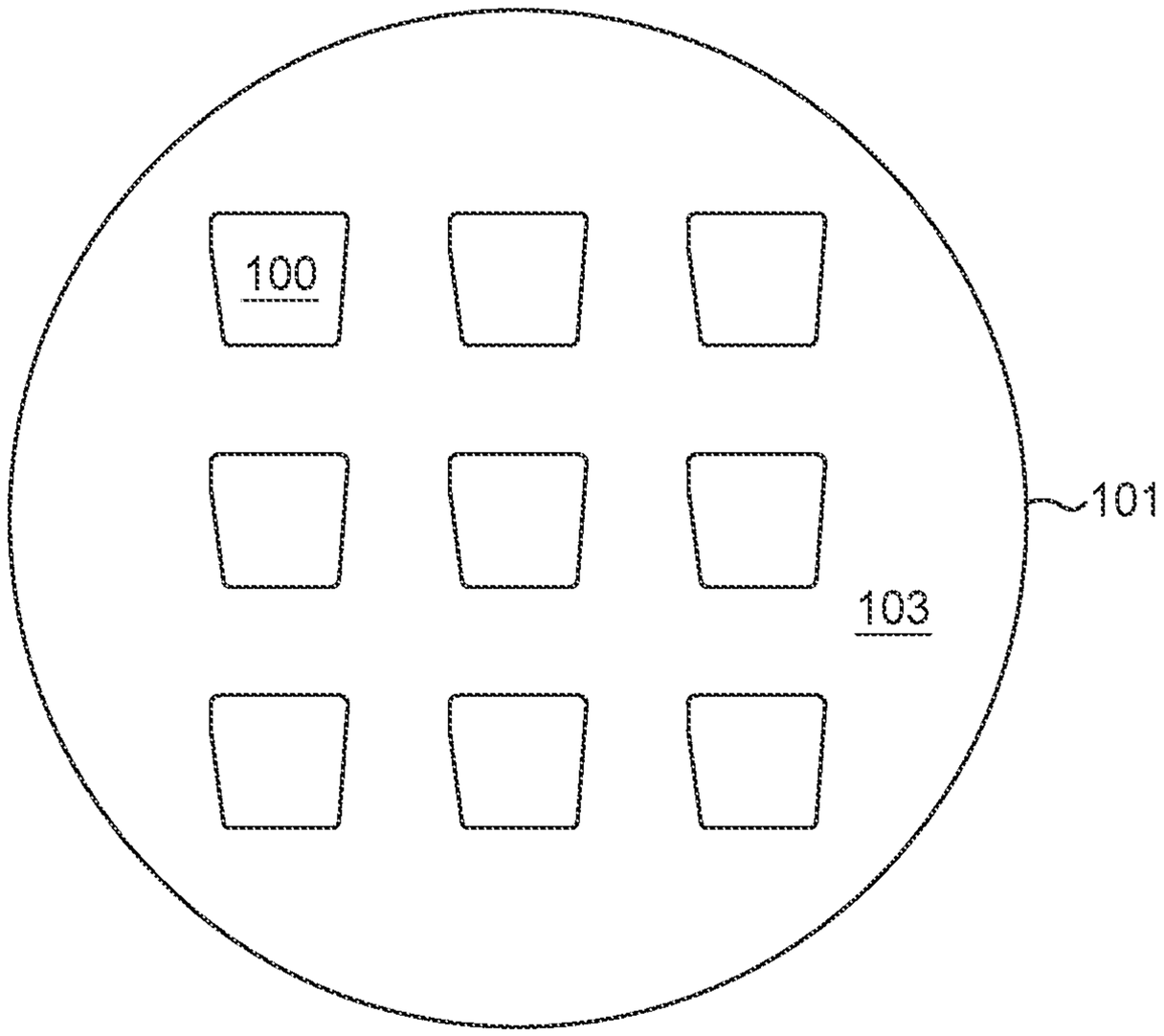

FIG. 1A

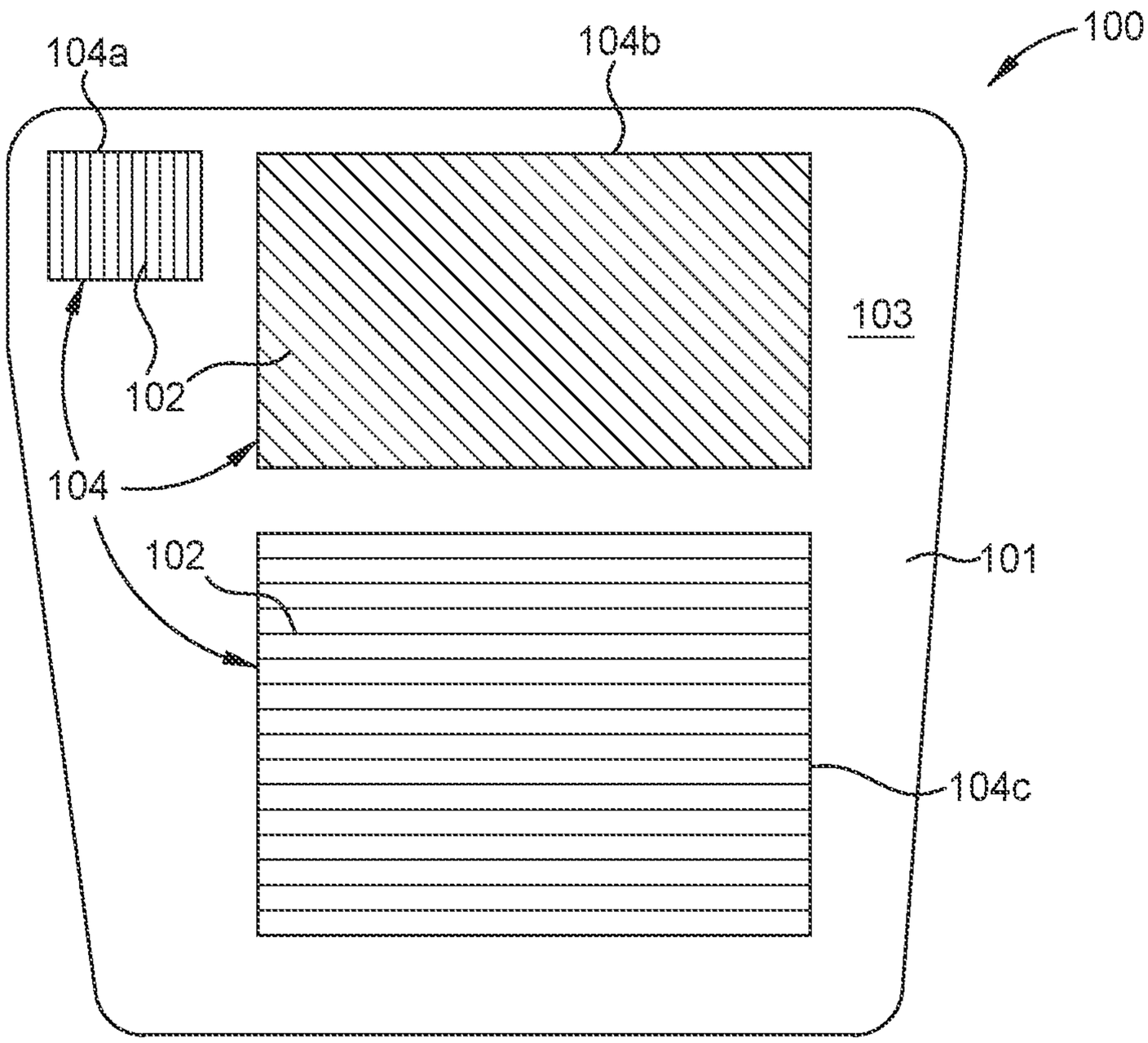

FIG. 1B

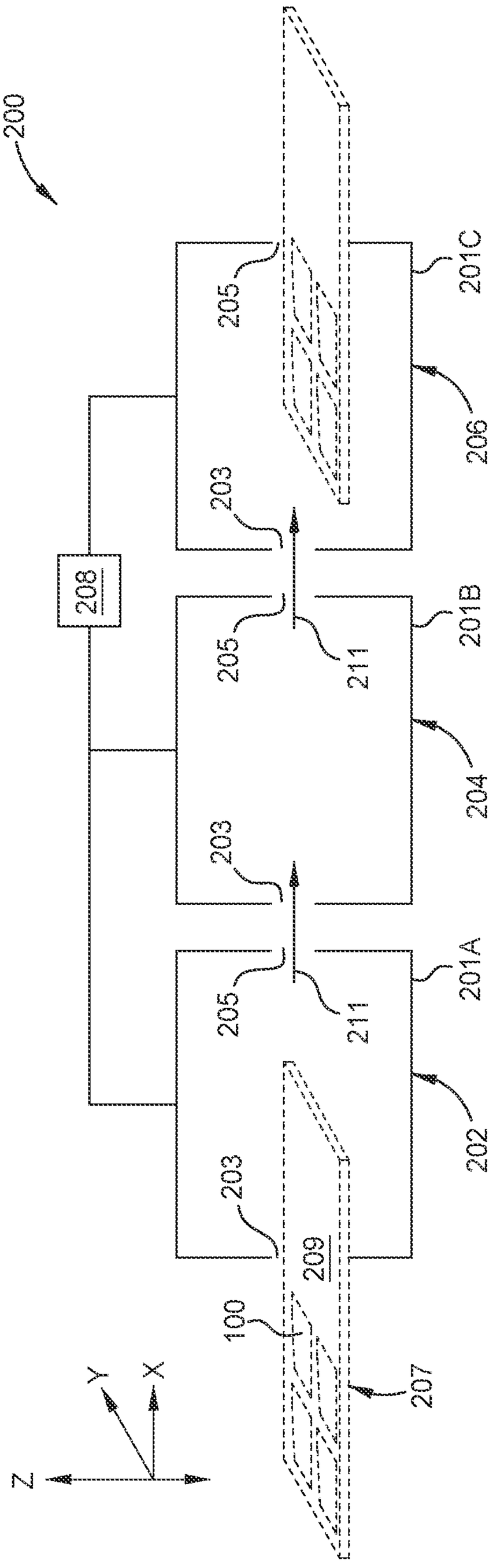
200
205
201C
206
203
208
205
211
201B
203
204
205
211
201A
203
202
209
100
207
Y
X
Z

FIG. 2

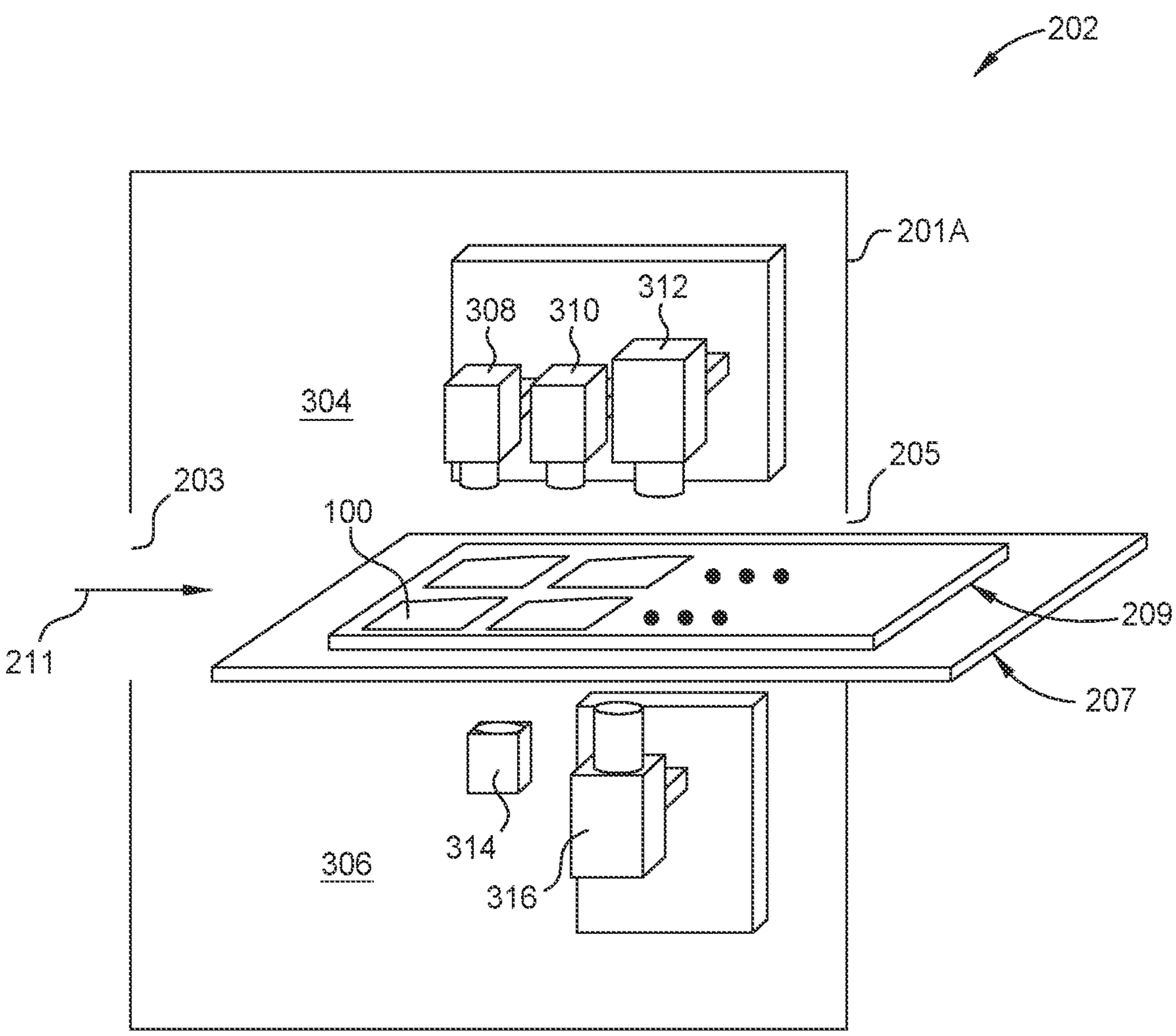

FIG. 3A

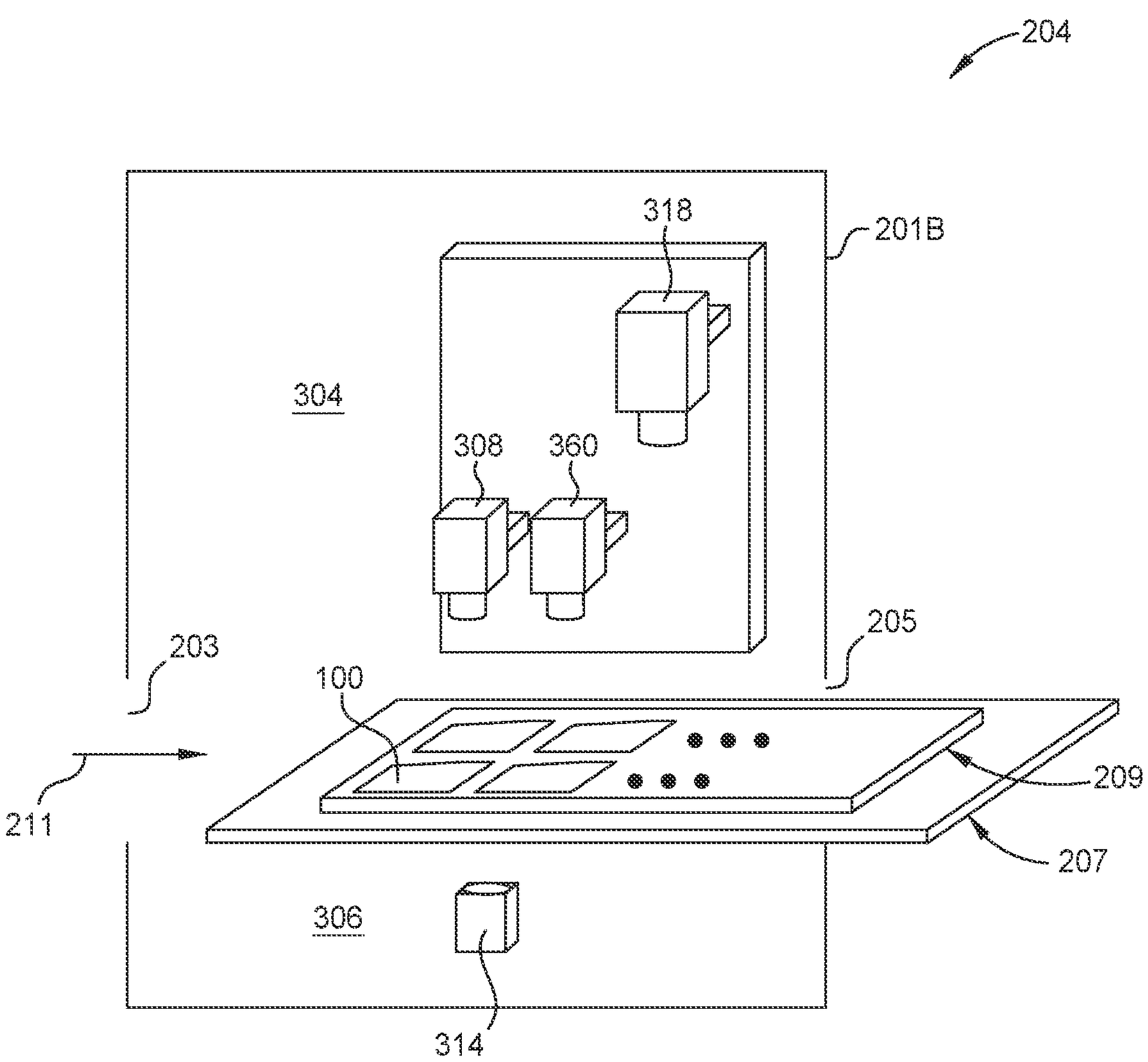

FIG. 3B

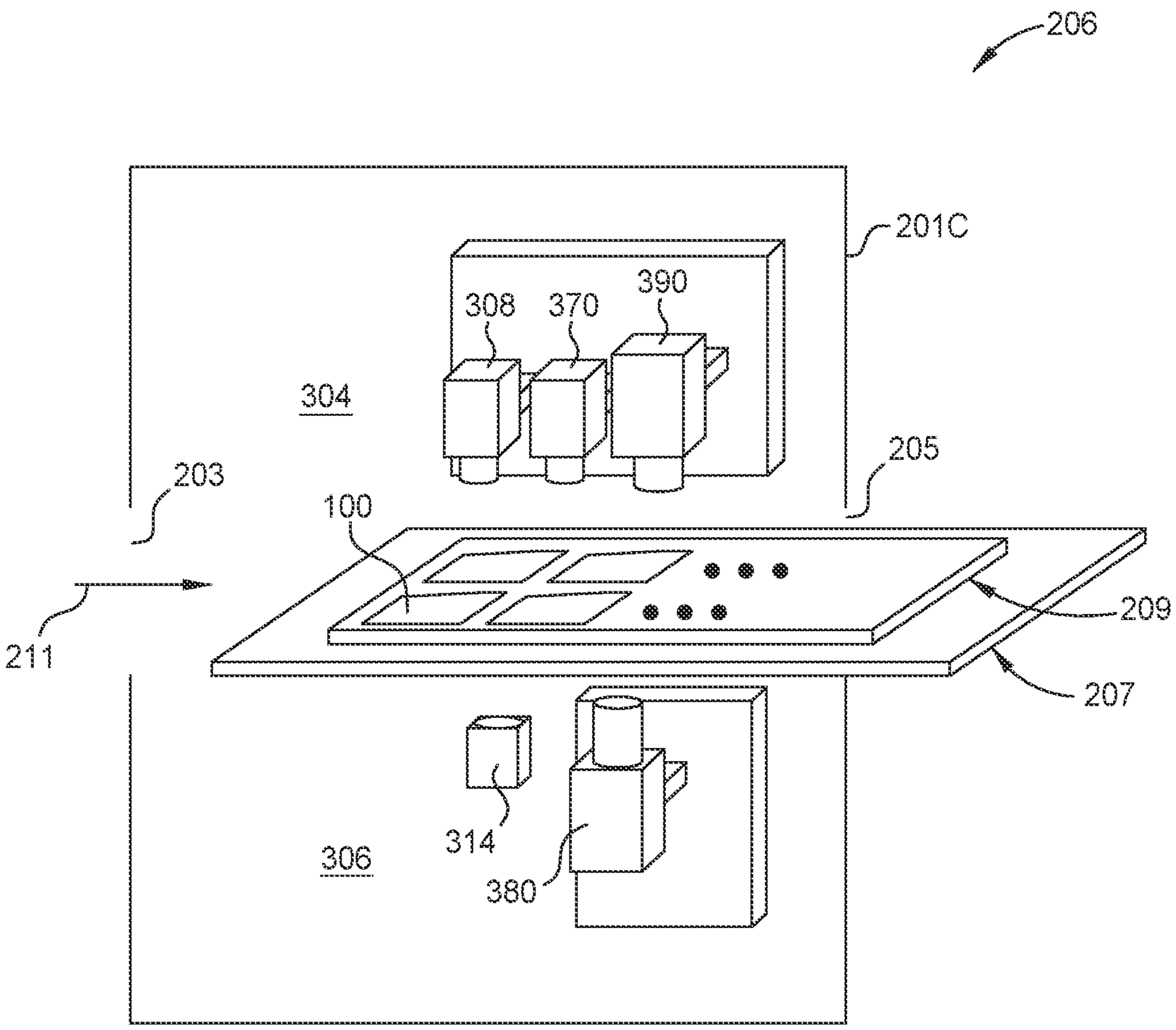

FIG. 3C

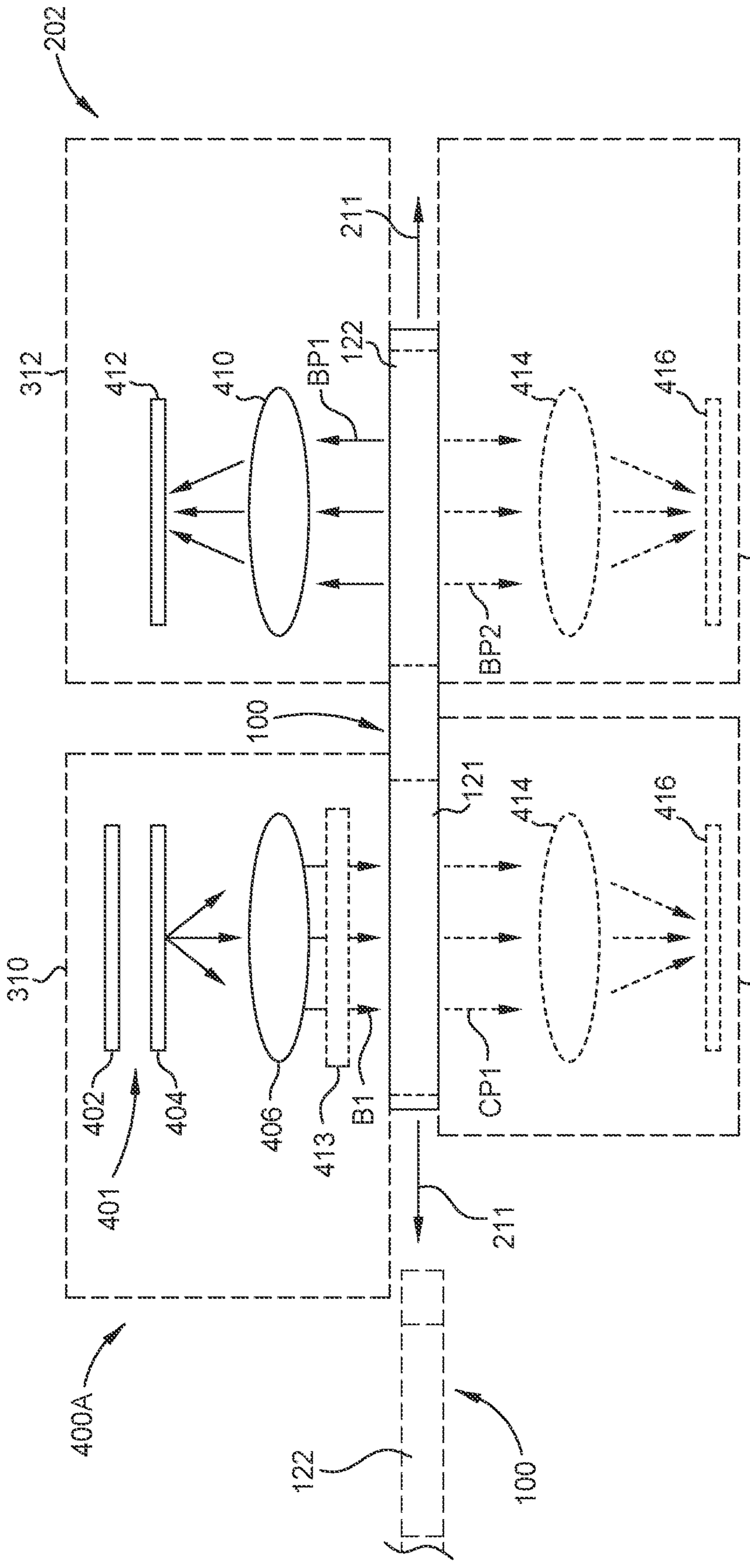
400A
401
402
404
406
410
412
413
414
416
121
122
211
310
312
316
100
B1
BP1
BP2
CP1

FIG. 4A

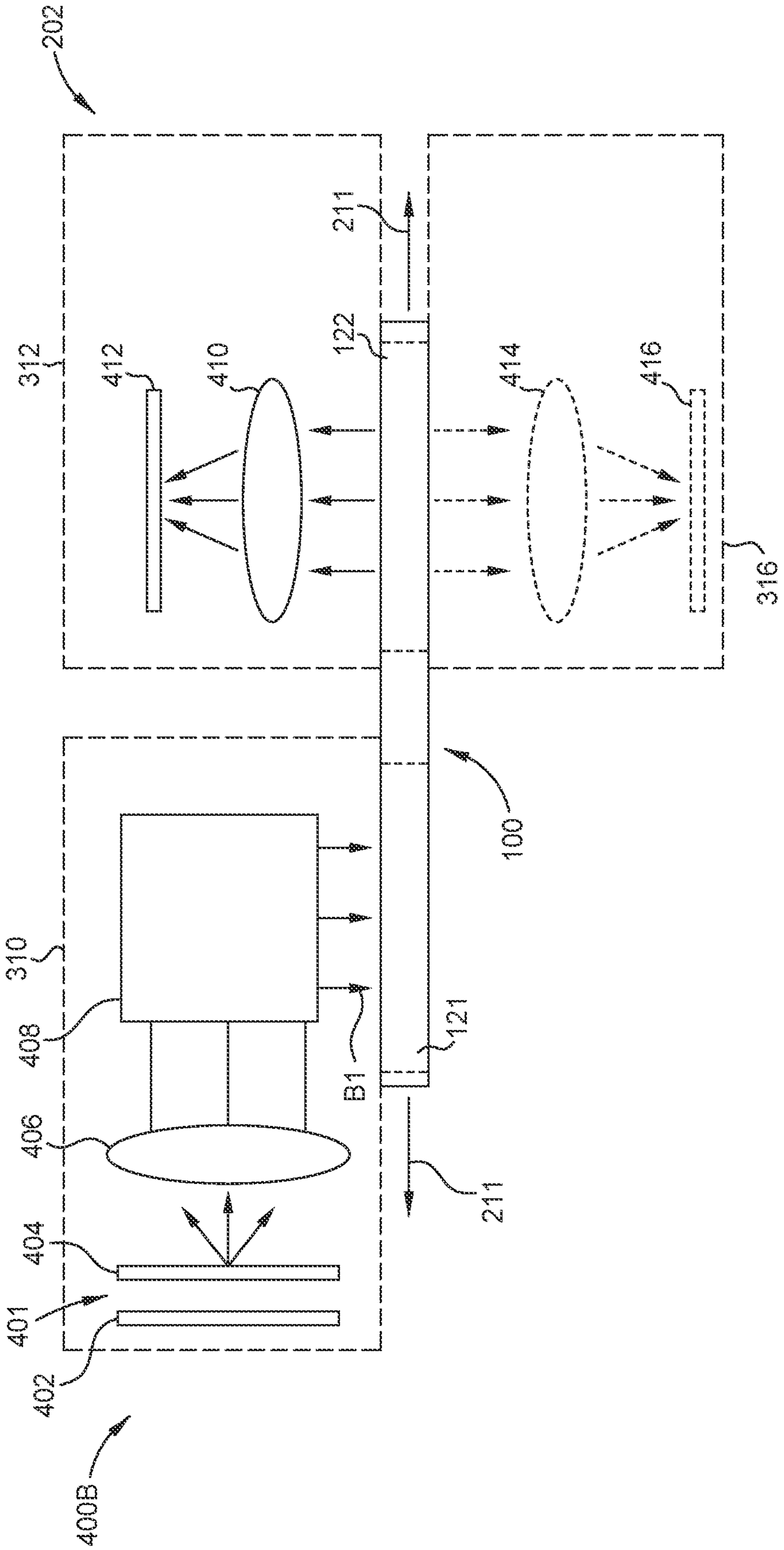
202
312
412
410
211
122
414
416
316
100
310
408
406
404
401
402
400B
121
B1

FIG. 4B

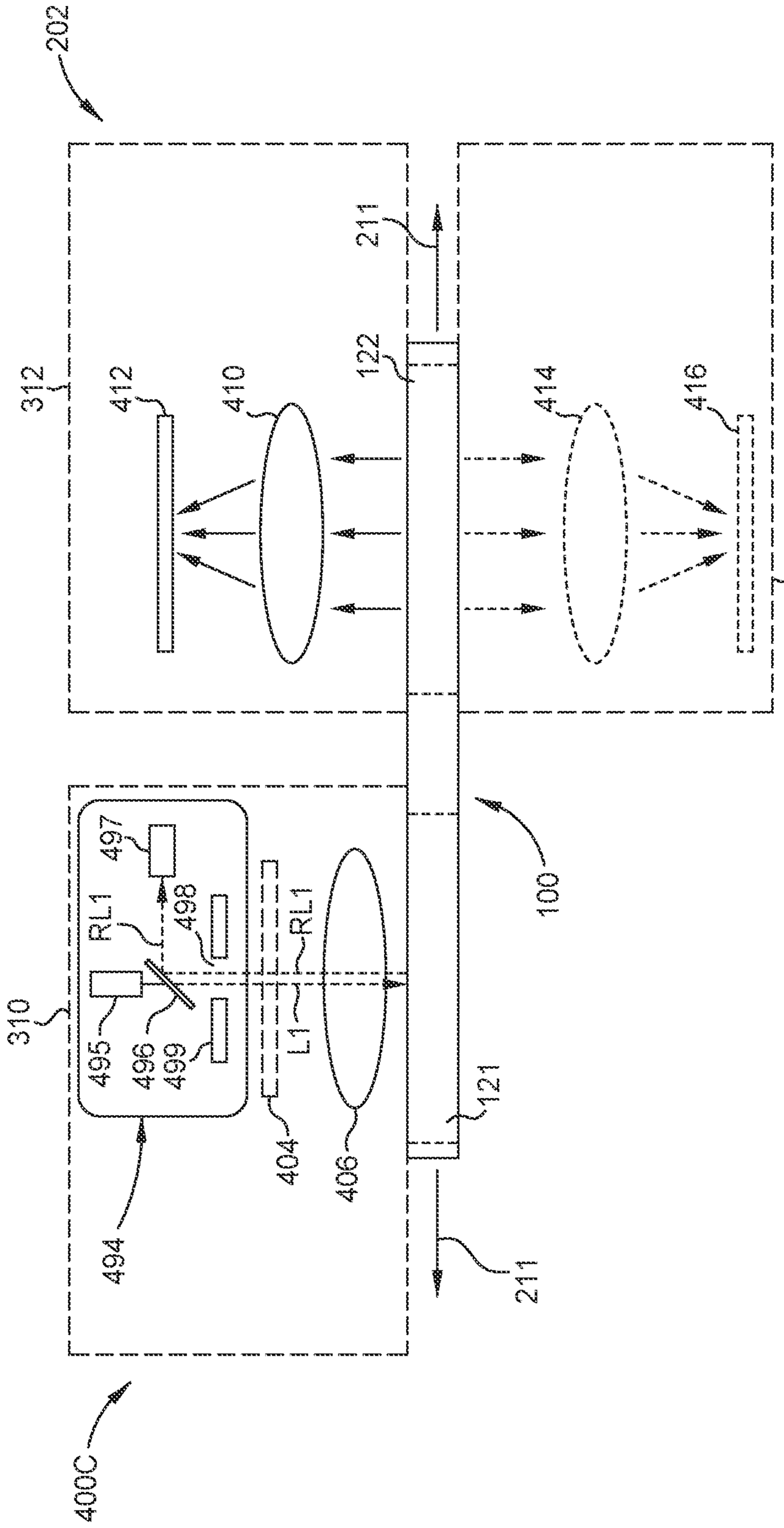
202
211
312
412
410
122
414
416
316
310
497
RL1
498
495
496
499
L1
RL1
100
121
494
404
406
211
400C

FIG. 4C

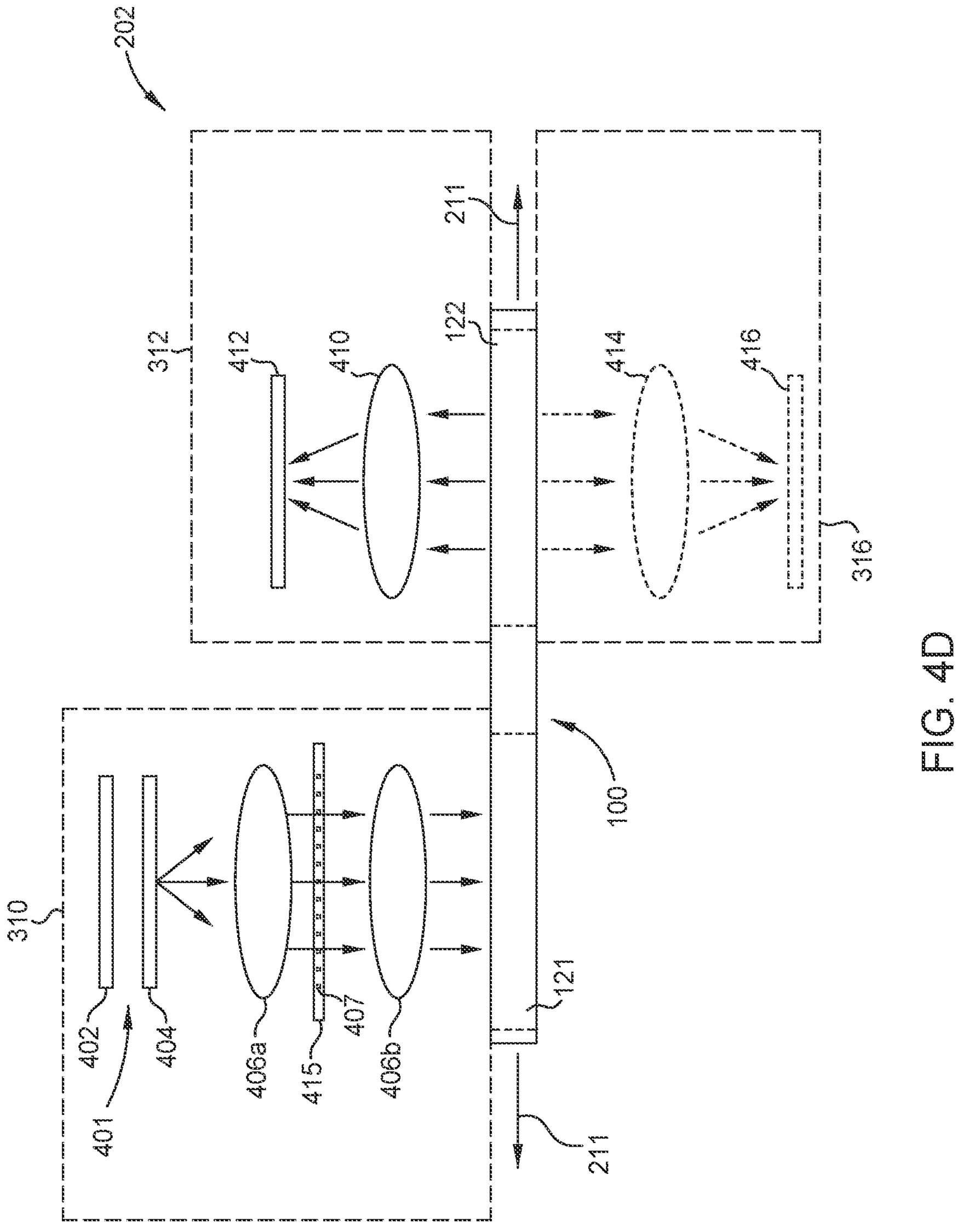
202
211
312
412
410
122
414
416
316
310
402
401
404
406a
415
407
406b
100
121
211
400D

FIG. 4D

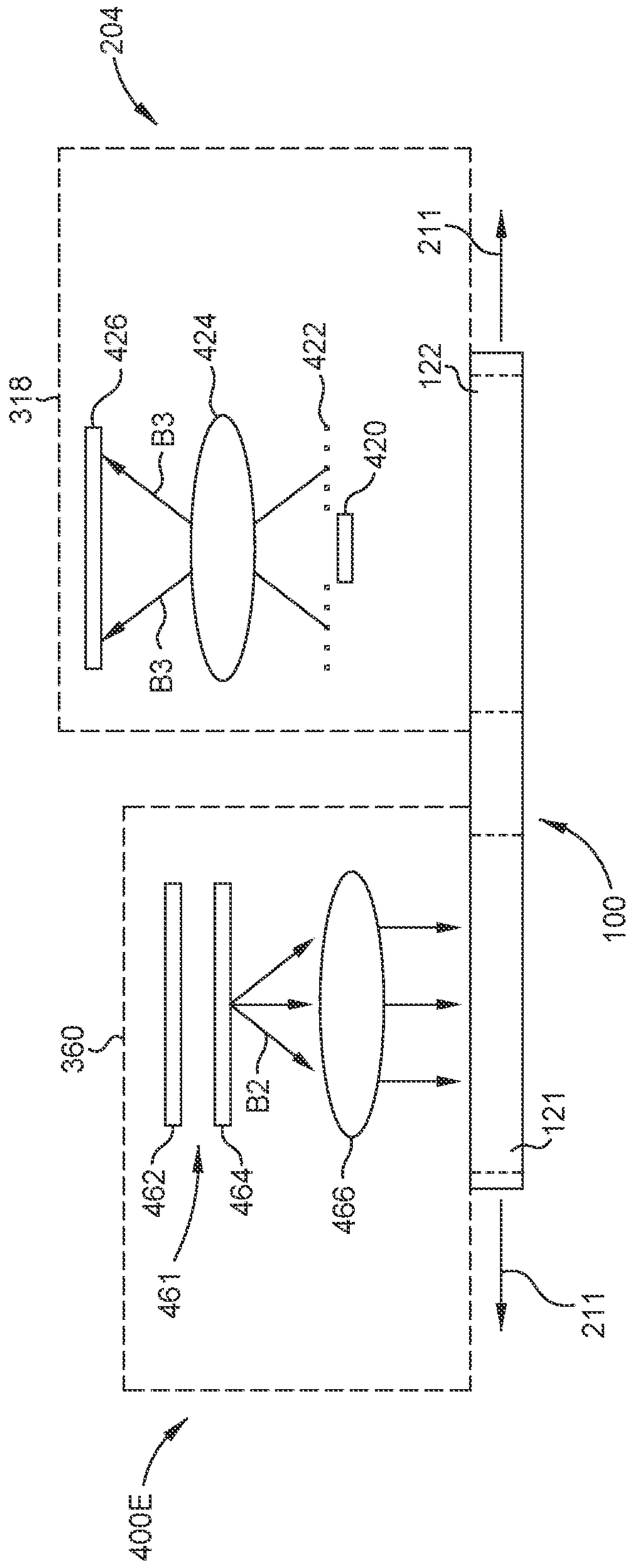
204
211
318
426
424
422
420
B3
B3
122
360
B2
462
464
466
461
100
121
211
400E

FIG. 4E

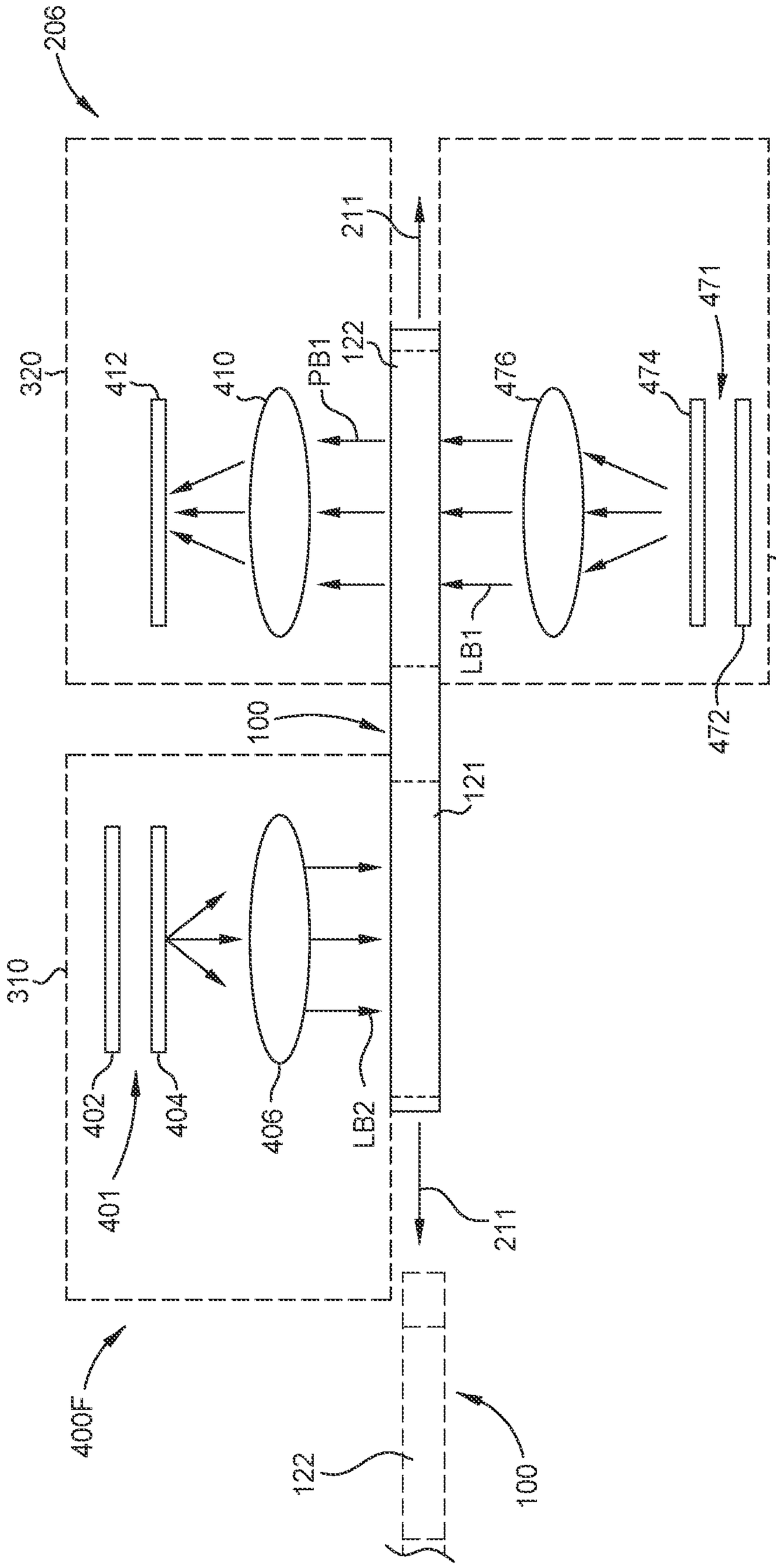
206
320
412
410
PB1
122
211
471
476
474
LB1
316
472
100
121
310
402
404
406
LB2
401
400F
122
100
211

FIG. 4F

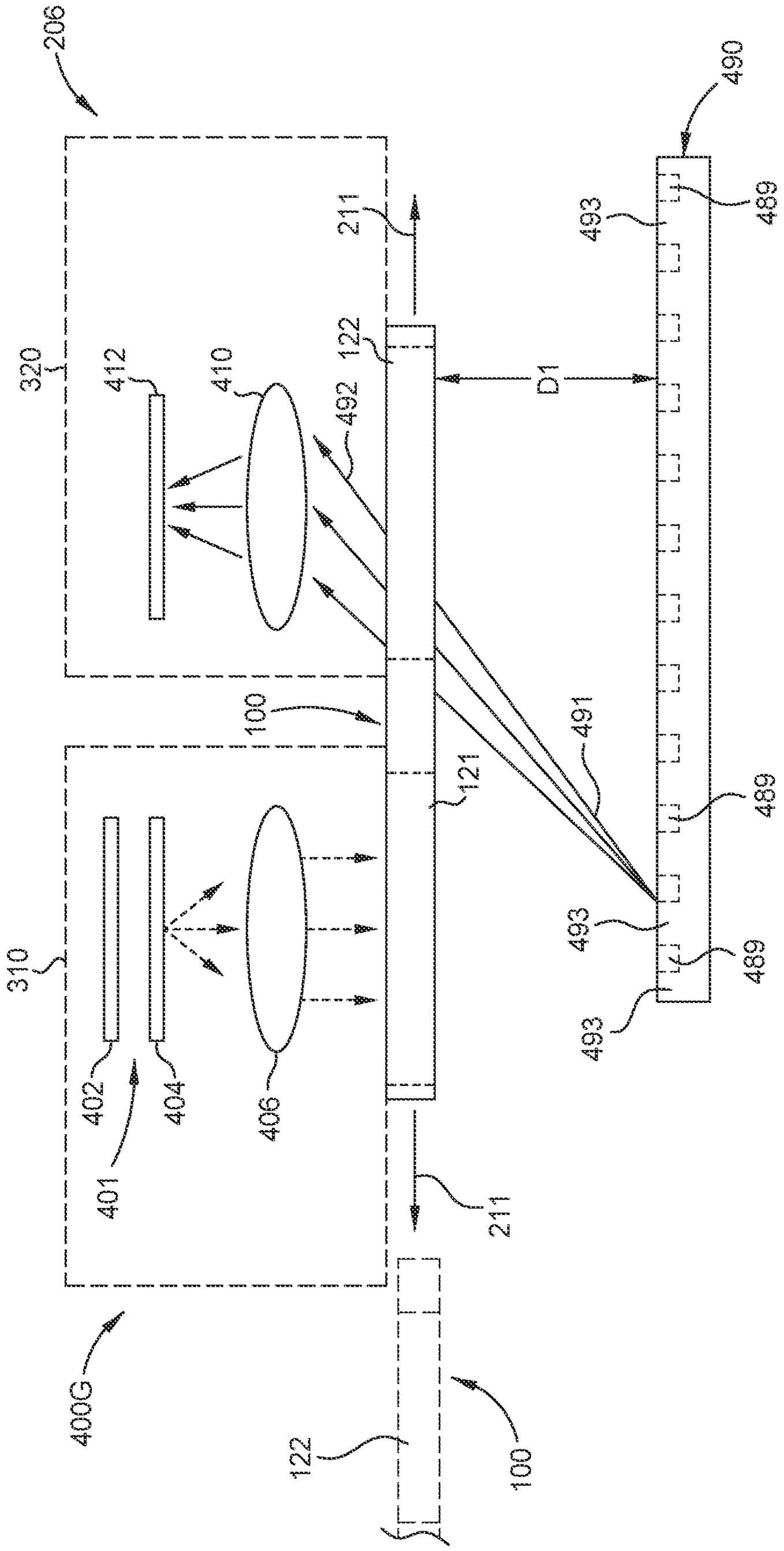
400G
401
402
404
406
310
320
412
410
492
122
211
100
121
491
493
489
D1
490

FIG. 4G

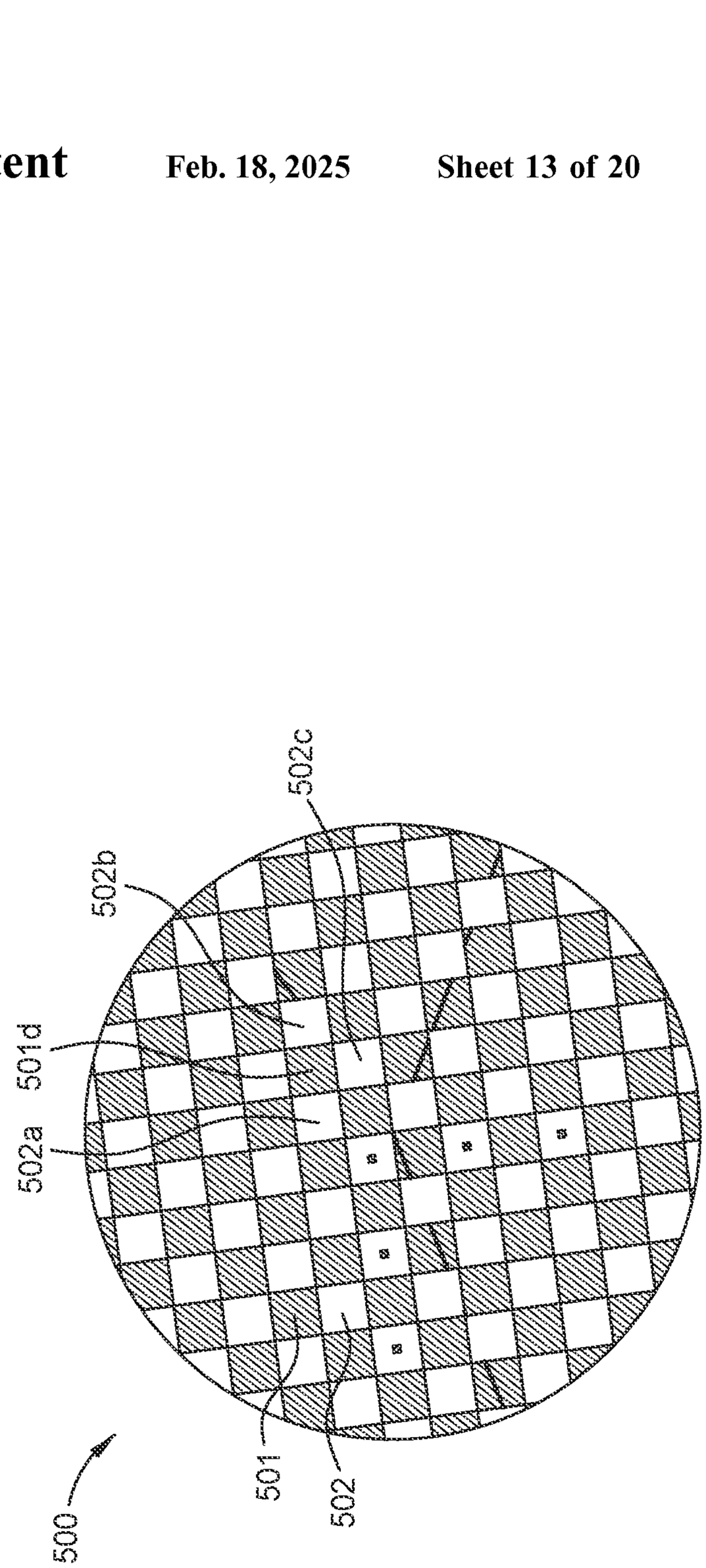

FIG. 5

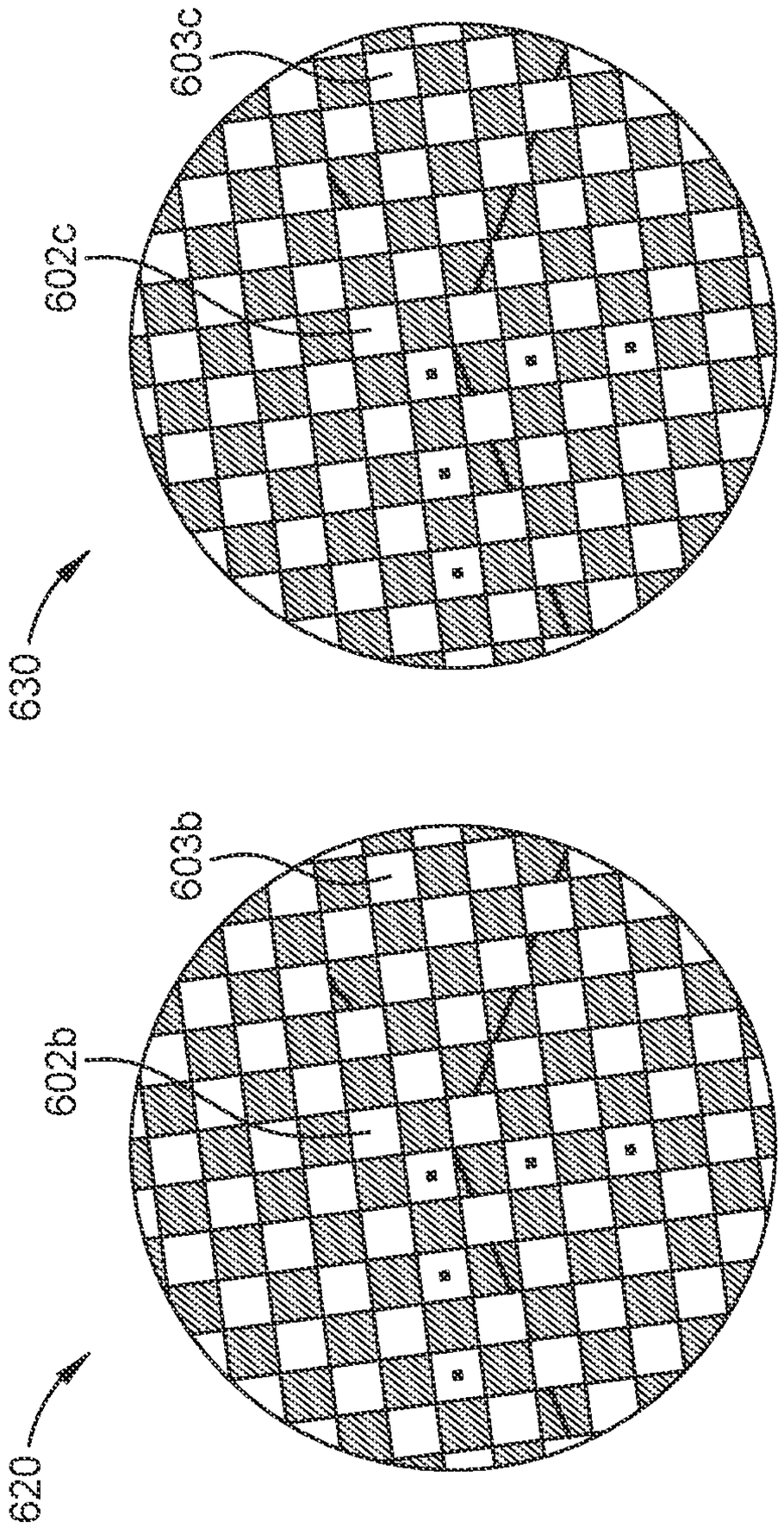

FIG. 6C

FIG. 6B

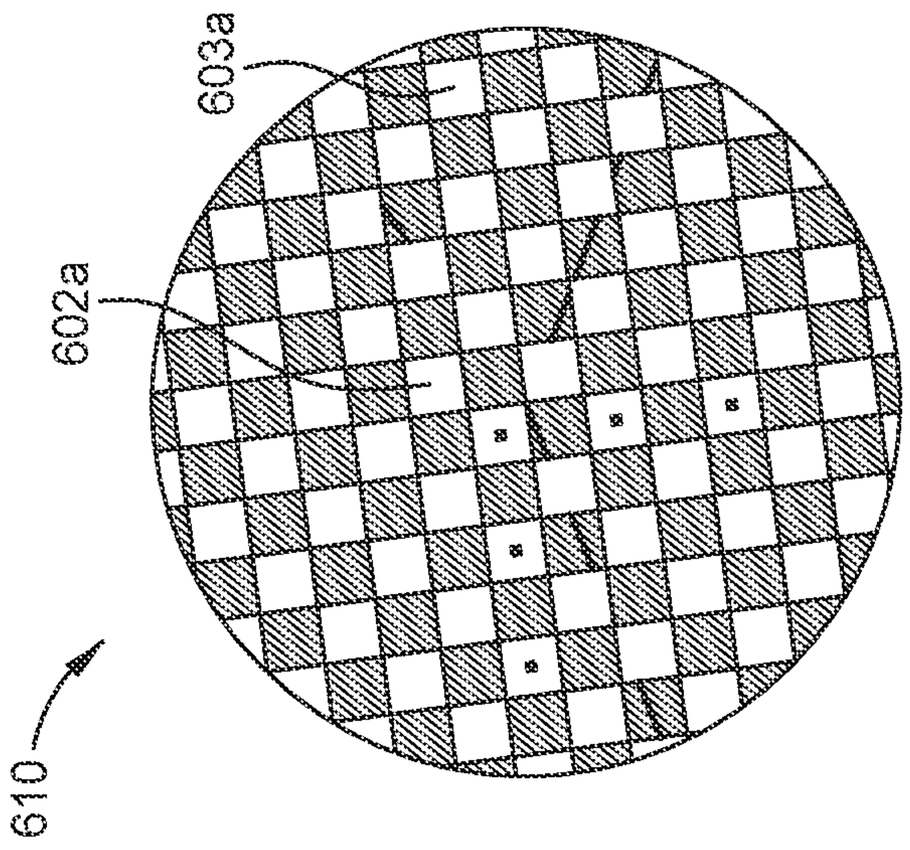

FIG. 6A

FIG. 7C

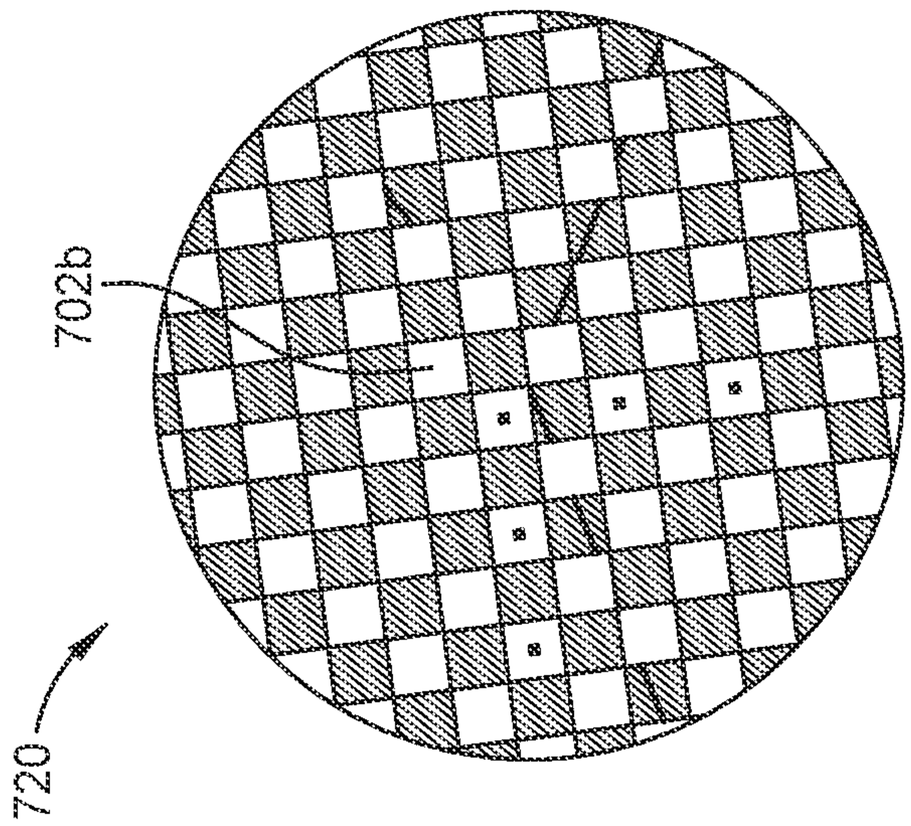

FIG. 7B

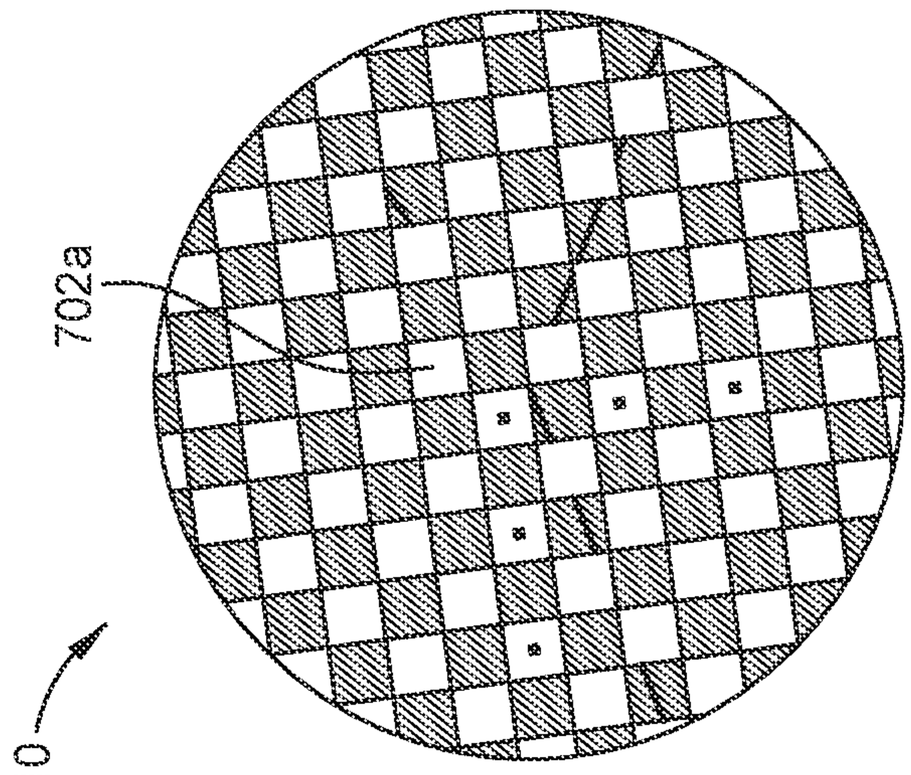

FIG. 7A

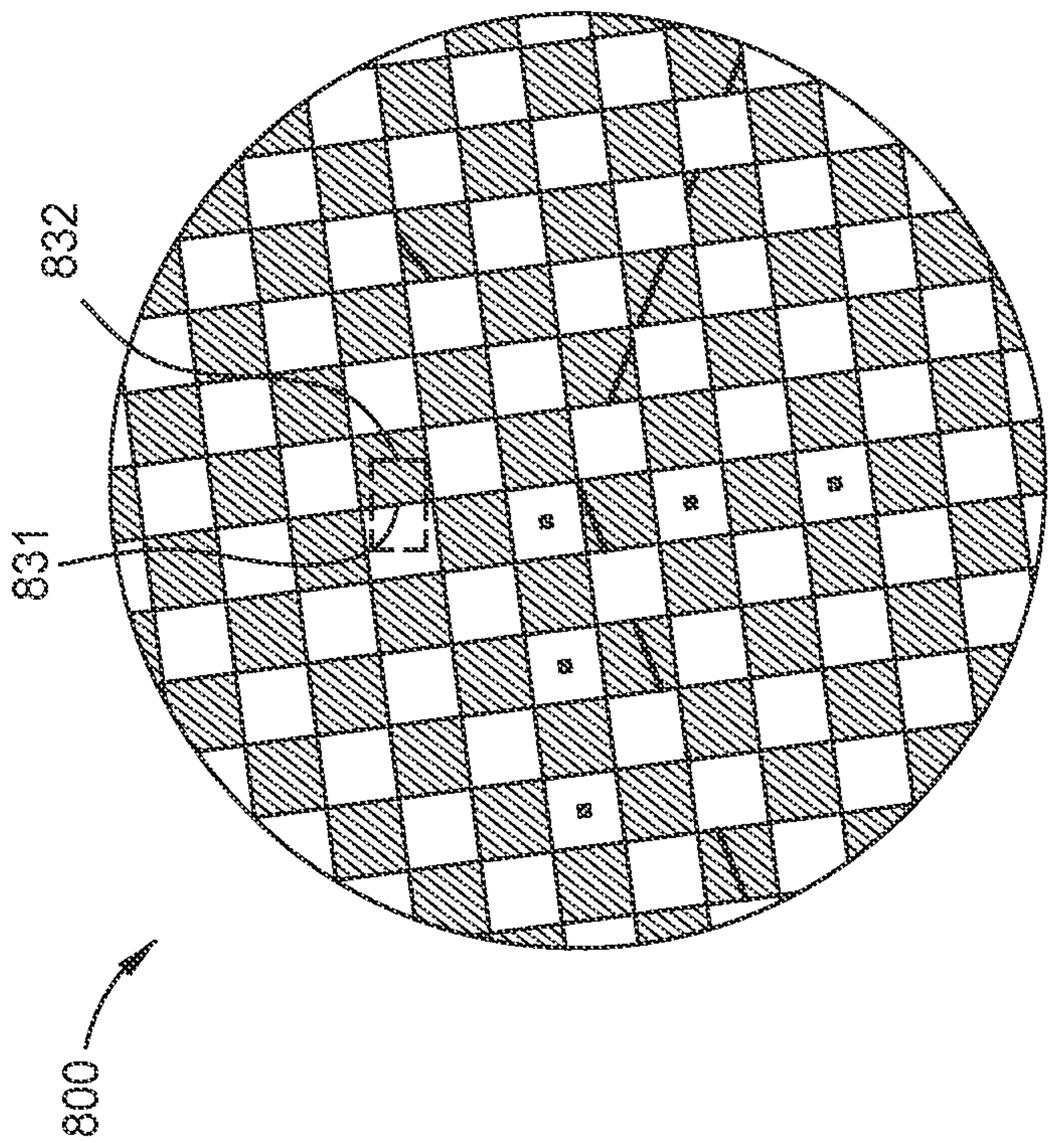

FIG. 8

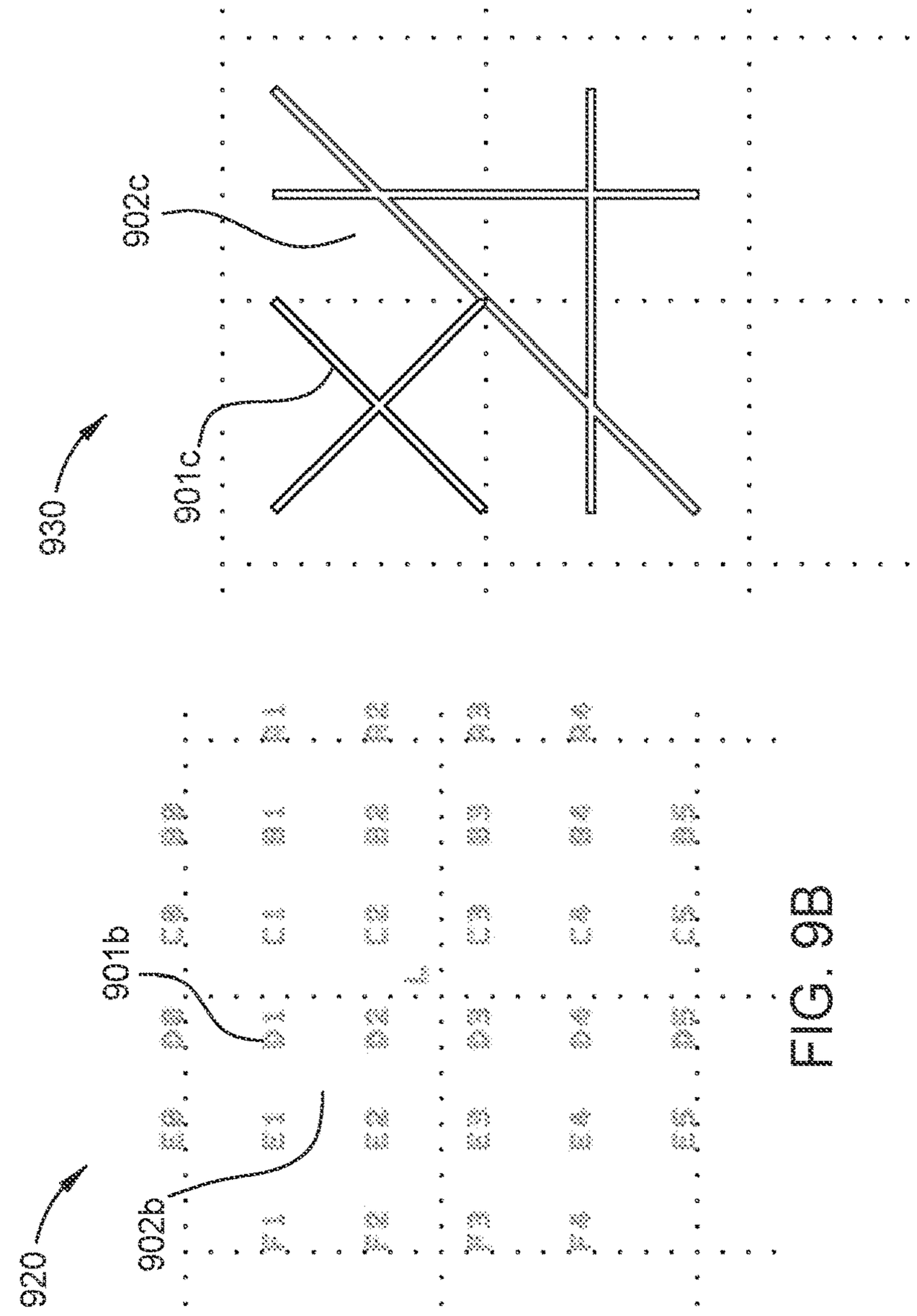

FIG. 9C

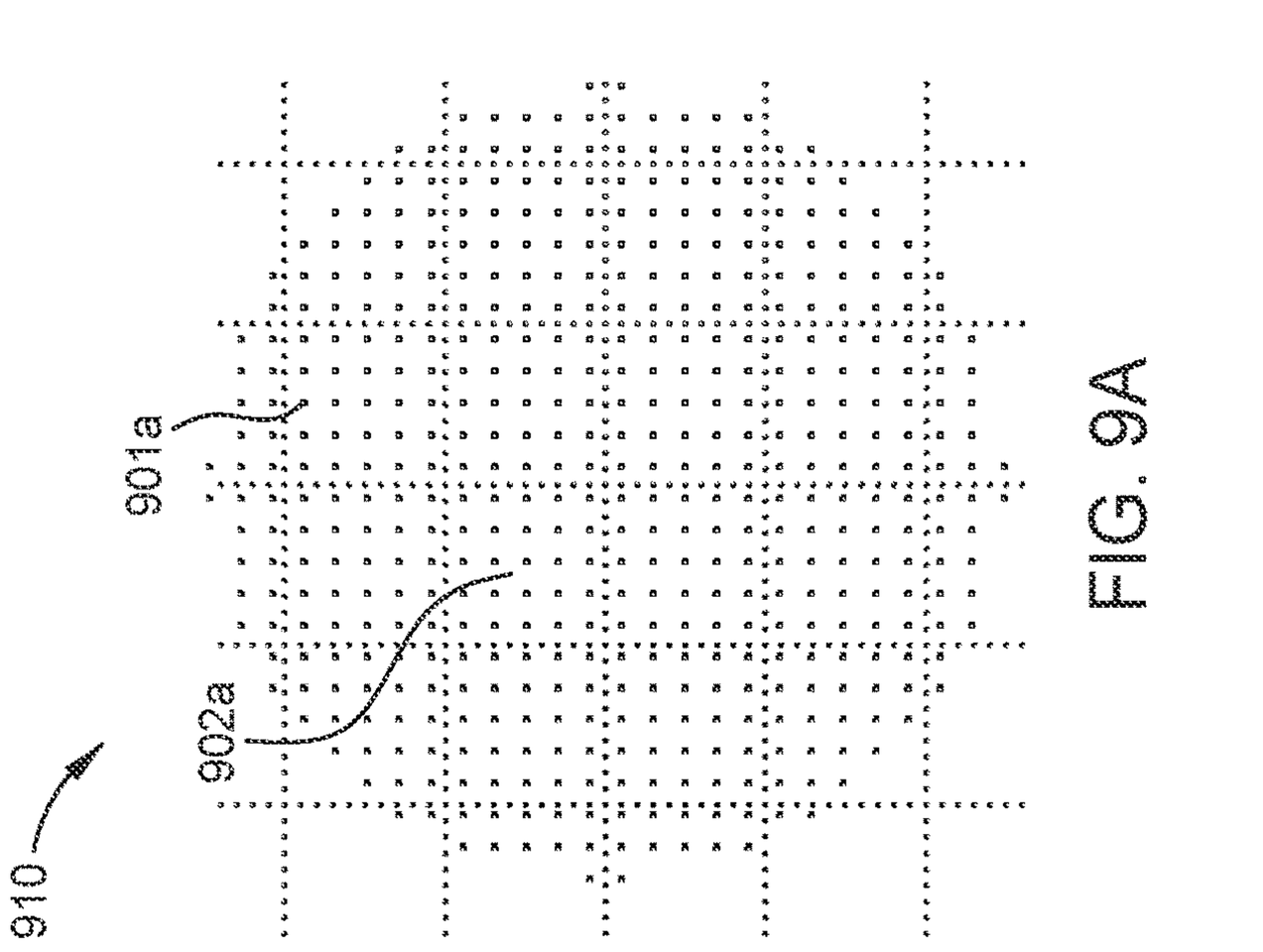

FIG. 9B

FIG. 9A

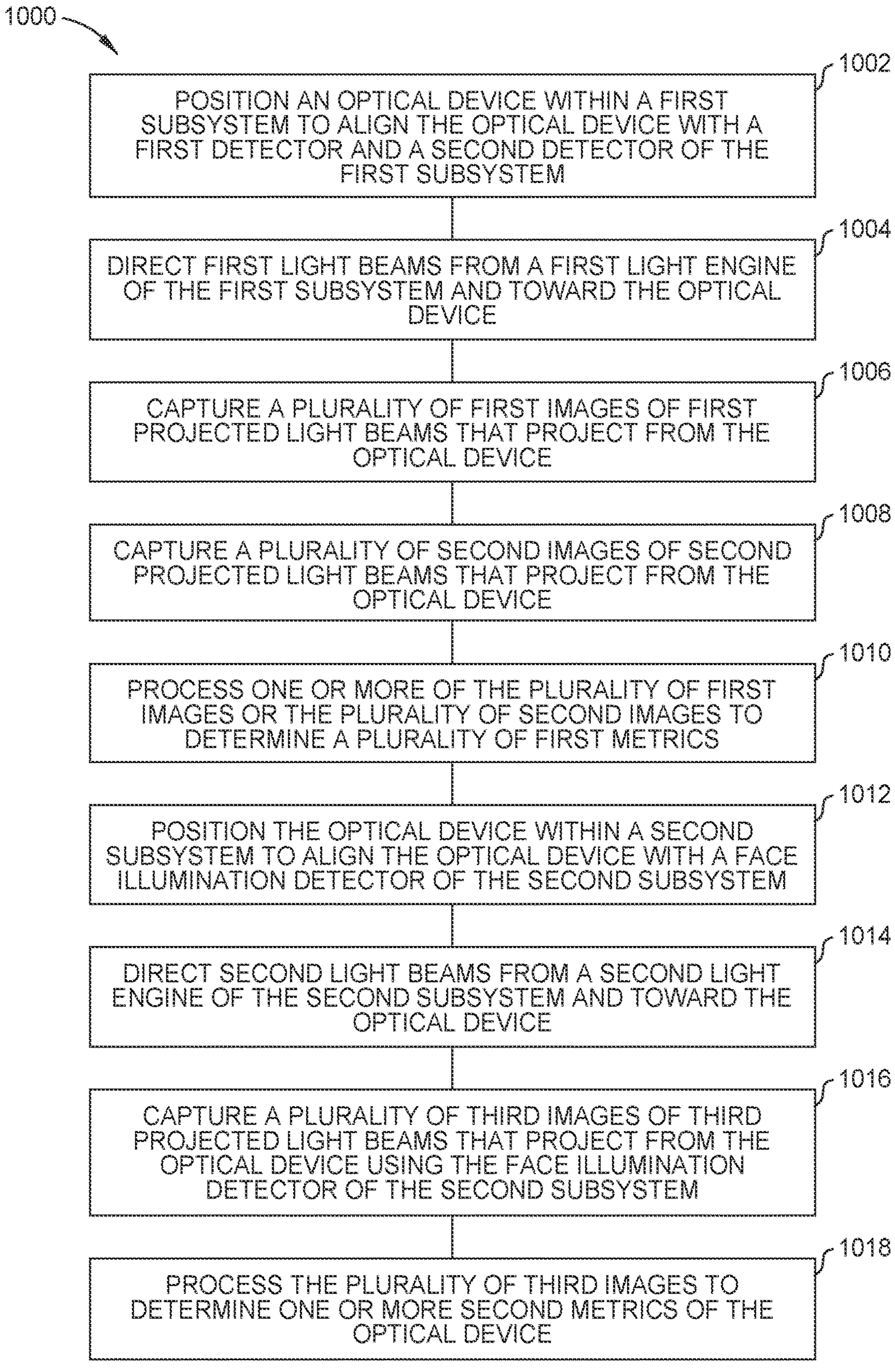
1000
POSITION AN OPTICAL DEVICE WITHIN A FIRST SUBSYSTEM TO ALIGN THE OPTICAL DEVICE WITH A FIRST DETECTOR AND A SECOND DETECTOR OF THE FIRST SUBSYSTEM
1002
DIRECT FIRST LIGHT BEAMS FROM A FIRST LIGHT ENGINE OF THE FIRST SUBSYSTEM AND TOWARD THE OPTICAL DEVICE
1004
CAPTURE A PLURALITY OF FIRST IMAGES OF FIRST PROJECTED LIGHT BEAMS THAT PROJECT FROM THE OPTICAL DEVICE
1006
CAPTURE A PLURALITY OF SECOND IMAGES OF SECOND PROJECTED LIGHT BEAMS THAT PROJECT FROM THE OPTICAL DEVICE
1008
PROCESS ONE OR MORE OF THE PLURALITY OF FIRST IMAGES OR THE PLURALITY OF SECOND IMAGES TO DETERMINE A PLURALITY OF FIRST METRICS
1010
POSITION THE OPTICAL DEVICE WITHIN A SECOND SUBSYSTEM TO ALIGN THE OPTICAL DEVICE WITH A FACE ILLUMINATION DETECTOR OF THE SECOND SUBSYSTEM
1012
DIRECT SECOND LIGHT BEAMS FROM A SECOND LIGHT ENGINE OF THE SECOND SUBSYSTEM AND TOWARD THE OPTICAL DEVICE
1014
CAPTURE A PLURALITY OF THIRD IMAGES OF THIRD PROJECTED LIGHT BEAMS THAT PROJECT FROM THE OPTICAL DEVICE USING THE FACE ILLUMINATION DETECTOR OF THE SECOND SUBSYSTEM
1016
PROCESS THE PLURALITY OF THIRD IMAGES TO DETERMINE ONE OR MORE SECOND METRICS OF THE OPTICAL DEVICE
1018

FIG. 10

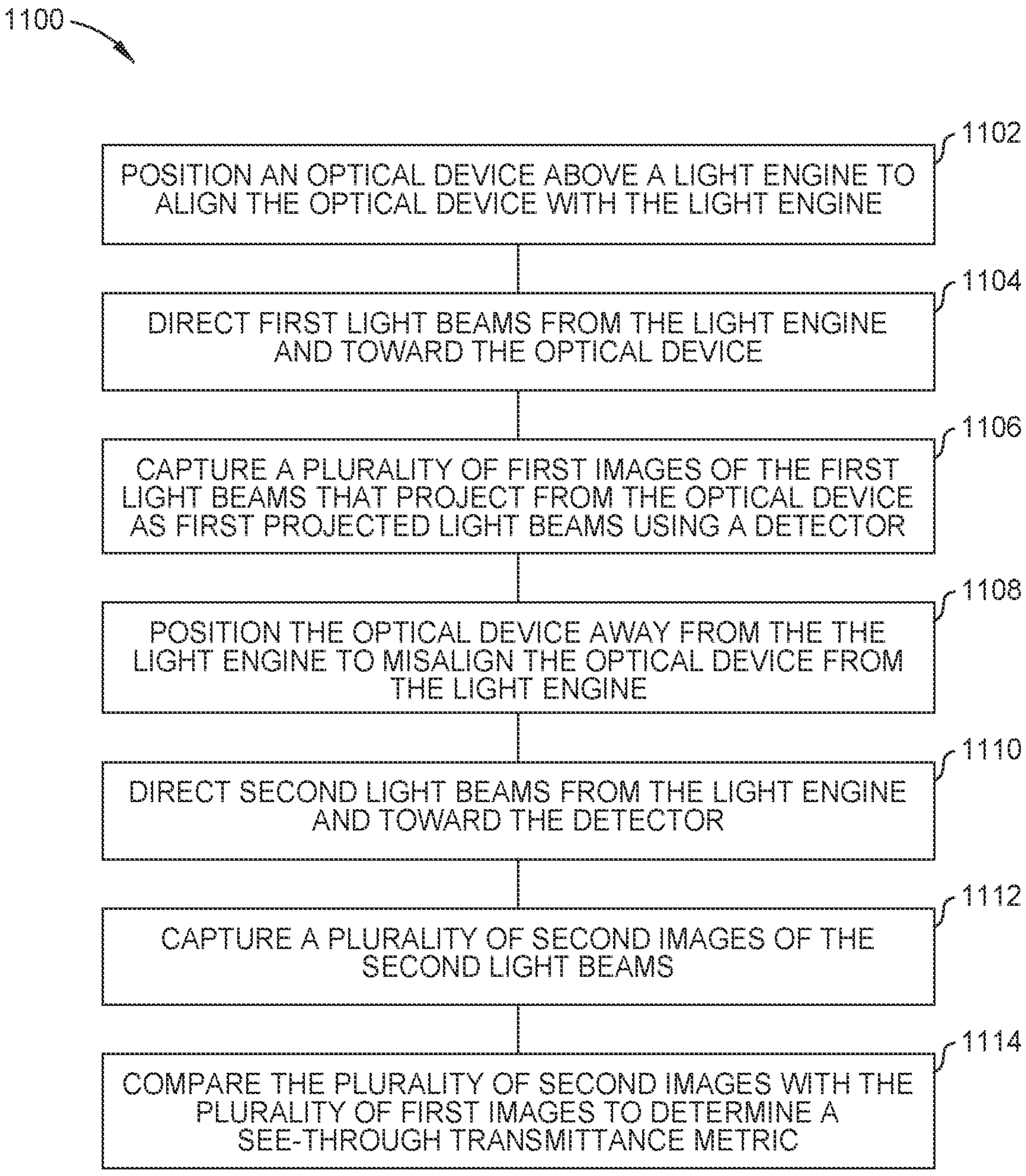
1100
POSITION AN OPTICAL DEVICE ABOVE A LIGHT ENGINE TO ALIGN THE OPTICAL DEVICE WITH THE LIGHT ENGINE
1102
DIRECT FIRST LIGHT BEAMS FROM THE LIGHT ENGINE AND TOWARD THE OPTICAL DEVICE
1104
CAPTURE A PLURALITY OF FIRST IMAGES OF THE FIRST LIGHT BEAMS THAT PROJECT FROM THE OPTICAL DEVICE AS FIRST PROJECTED LIGHT BEAMS USING A DETECTOR
1106
POSITION THE OPTICAL DEVICE AWAY FROM THE THE LIGHT ENGINE TO MISALIGN THE OPTICAL DEVICE FROM THE LIGHT ENGINE
1108
DIRECT SECOND LIGHT BEAMS FROM THE LIGHT ENGINE AND TOWARD THE DETECTOR
1110
CAPTURE A PLURALITY OF SECOND IMAGES OF THE SECOND LIGHT BEAMS
1112
COMPARE THE PLURALITY OF SECOND IMAGES WITH THE PLURALITY OF FIRST IMAGES TO DETERMINE A SEE-THROUGH TRANSMITTANCE METRIC
1114

FIG. 11

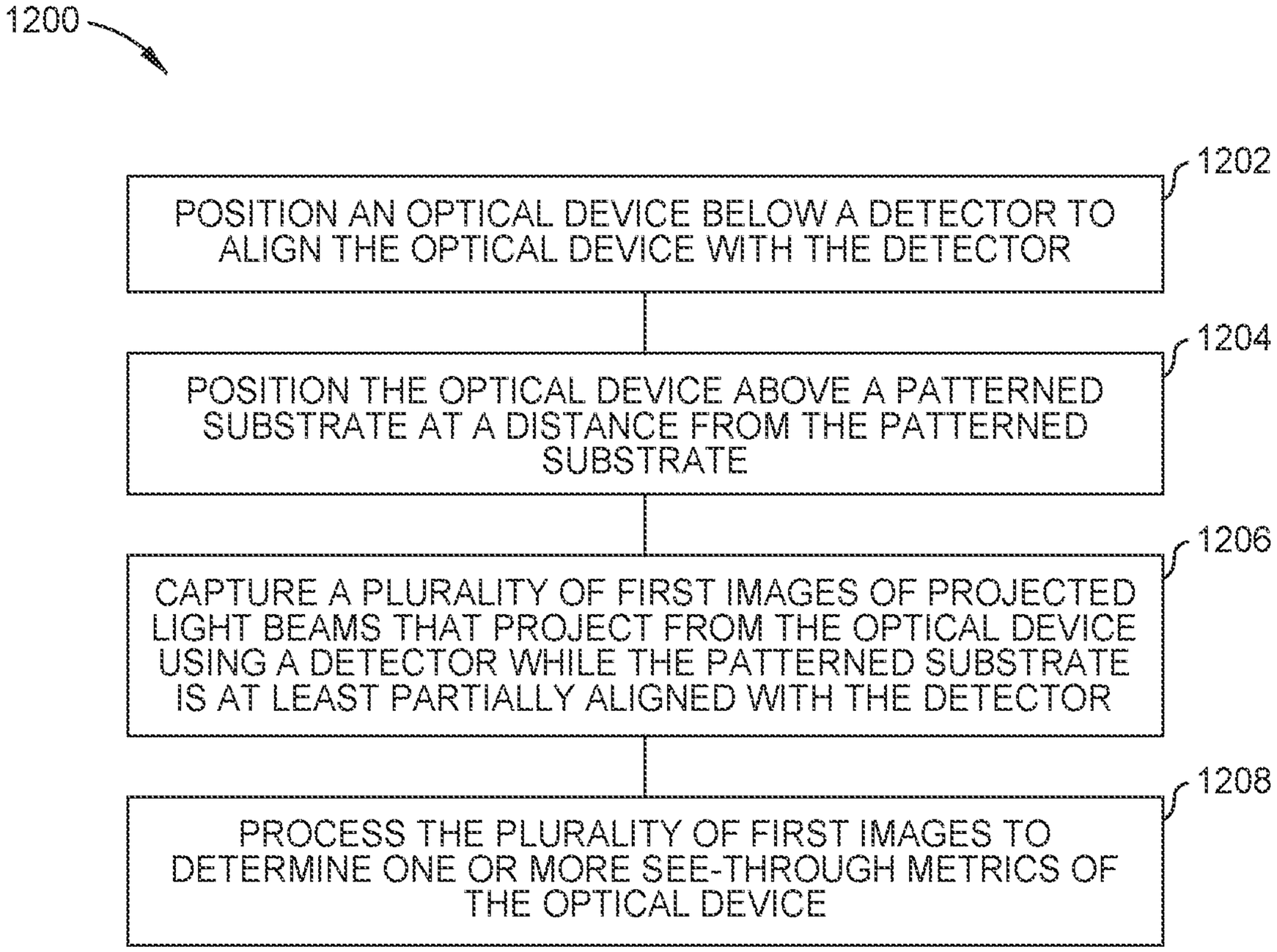
1200
POSITION AN OPTICAL DEVICE BELOW A DETECTOR TO ALIGN THE OPTICAL DEVICE WITH THE DETECTOR
1202
POSITION THE OPTICAL DEVICE ABOVE A PATTERNED SUBSTRATE AT A DISTANCE FROM THE PATTERNED SUBSTRATE
1204
CAPTURE A PLURALITY OF FIRST IMAGES OF PROJECTED LIGHT BEAMS THAT PROJECT FROM THE OPTICAL DEVICE USING A DETECTOR WHILE THE PATTERNED SUBSTRATE IS AT LEAST PARTIALLY ALIGNED WITH THE DETECTOR
1206
PROCESS THE PLURALITY OF FIRST IMAGES TO DETERMINE ONE OR MORE SEE-THROUGH METRICS OF THE OPTICAL DEVICE
1208

FIG. 12

IN-LINE METROLOGY SYSTEMS, APPARATUS, AND METHODS FOR OPTICAL DEVICES

CROSS-REFERENCE TO RELATED APPLICATIONS

This application claims benefit of U.S. provisional patent application Ser. No. 63/092,421, filed Oct. 15, 2020, which is herein incorporated by reference in its entirety.

BACKGROUND

Field

Embodiments of the present disclosure relate to optical devices for augmented, virtual, and/or mixed reality applications. In one or more embodiments, an optical device metrology system is configured to measure a plurality of first metrics and one or more second metrics for optical devices, the one or more second metrics including a display leakage metric.

Description of the Related Art

Virtual reality is generally considered to be a computer generated simulated environment in which a user has an apparent physical presence. A virtual reality experience can be generated in 3D and viewed with a head-mounted display (HMD), such as glasses or other wearable display devices that have near-eye display panels as lenses to display a virtual reality environment that replaces an actual environment.

Augmented reality, however, enables an experience in which a user can still see through the display lenses of the glasses or other HMD device to view the surrounding environment, yet also see images of virtual objects that are generated for display and appear as part of the environment. Augmented reality can include any type of input, such as audio and haptic inputs, as well as virtual images, graphics, and video that enhances or augments the environment that the user experiences. As an emerging technology, there are many challenges and design constraints with augmented reality.

One such challenge is displaying a virtual image overlaid on an ambient environment. Augmented waveguide combiners are used to assist in overlaying images. Generated light is in-coupled into an augmented waveguide combiner, propagated through the augmented waveguide combiner, out-coupled from the augmented waveguide combiner, and overlaid on the ambient environment. Light is coupled into and out of augmented waveguide combiners using surface relief gratings. The intensity of the out-coupled light may not be adequately controlled.

Accordingly, there is a need in the art for optical device metrology systems and methods.

SUMMARY

Embodiments of the present disclosure relate to optical devices for augmented, virtual, and/or mixed reality applications. In one or more embodiments, an optical device metrology system is configured to measure a plurality of first metrics and one or more second metrics for optical devices, the one or more second metrics including a display leakage metric.

In one implementation, an optical device metrology system includes a stage configured to move a tray along a stage path, and a first subsystem. The first subsystem includes a first body having a first opening and a second opening to allow the stage to move through the first opening and the second opening, and a first light engine positioned within the first body and mounted above the stage path. The first light engine is configured to direct first light beams toward the stage path. The first light engine includes a first illuminator, and the first illuminator includes a first light source and a first projection structure. The first light engine includes a first lens positioned between the first illuminator and the stage path along an optical path, and one or more two-dimensional Galvano mirrors configured to turn the first light beams along a 90 degree turn toward the stage path. The first subsystem includes a first detector positioned within the first body and mounted above the stage path to receive first projected light beams projected upwardly from the stage path. The first subsystem includes a second detector positioned within the first body and mounted below the stage path to receive second projected light beams projected downwardly from the stage path. The optical device metrology system includes a second subsystem, and the second subsystem includes a second body having a first opening and a second opening to allow the stage to move through the first opening and the second opening of the second body. The second subsystem includes a second light engine positioned within the second body and mounted above the stage path. The second light engine is configured to direct second light beams toward the stage path. The second subsystem includes a face illumination detector configured to receive third projected light beams projected upwardly from the stage path. The optical device metrology system includes a controller in communication with the stage, the first subsystem, and the second subsystem. The controller includes instructions that, when executed, cause the stage to position an optical device within the first subsystem to align the optical device with the first detector and the second detector of the first subsystem. The instructions cause the first light engine to direct first light beams toward the optical device, and the directing includes turning the first light beams along a 90 degree turn toward the stage path. The instructions also cause the first detector to capture a plurality of first images of first projected light beams that project from the optical device, and cause the second detector to capture a plurality of second images of second projected light beams that project from the optical device. The instructions also cause processing of one or more of the plurality of first images or the plurality of second images to determine a plurality of first metrics of the optical device. The instructions also cause the stage to position the optical device within the second subsystem to align the optical device with the face illumination detector of the second subsystem. The instructions also cause the second light engine to direct second light beams toward the optical device, and the face illumination detector to capture a plurality of third images of third projected light beams that project from the optical device. The instructions also cause processing of the plurality of third images to determine one or more second metrics of the optical device, the one or more second metrics including a display leakage metric.

In one implementation, an optical device metrology system includes a stage configured to move a tray along a stage path, and a first subsystem. The first subsystem includes a first body having a first opening and a second opening to allow the stage to move through the first opening and the second opening, a first light engine positioned within the

first body and mounted above the stage path. The first light engine is configured to direct first light beams toward the stage path. The first light engine includes a first illuminator, and the first illuminator includes a first light source and a first projection structure. The first light engine includes a first lens positioned between the first illuminator and the stage path along an optical path, and one or more two-dimensional Galvano mirrors configured to turn the first light beams along a 90 degree turn toward the stage path. The first subsystem includes a first detector positioned within the first body and mounted above the stage path to receive first projected light beams projected upwardly from the stage path, and a second detector positioned within the first body and mounted below the stage path to receive second projected light beams projected downwardly from the stage path. The optical device metrology system includes a second subsystem. The second subsystem includes a second body having a first opening and a second opening to allow the stage to move through the first opening and the second opening of the second body. The second subsystem includes a second light engine positioned within the second body and mounted above the stage path. The second light engine is configured to direct second light beams toward the stage path. The second subsystem includes a face illumination detector configured to receive third projected light beams projected upwardly from the stage path.

In one implementation, a method of analyzing optical devices includes positioning an optical device within a first subsystem to align the optical device with a first detector and a second detector of the first subsystem, and directing first light beams from a first light engine of the first subsystem and toward the optical device. The directing includes turning the first light beams along a 90 degree turn toward the stage path. The method includes capturing a plurality of first images of first projected light beams that project from the optical device using the first detector of the first subsystem, and capturing a plurality of second images of second projected light beams that project from the optical device using the second detector of the first subsystem. The method includes processing one or more of the plurality of first images or the plurality of second images to determine a plurality of first metrics of the optical device, and positioning the optical device within a second subsystem to align the optical device with a face illumination detector of the second subsystem. The method includes directing second light beams from a second light engine of the second subsystem and toward the optical device, and capturing a plurality of third images of third projected light beams that project from the optical device using the face illumination detector of the second subsystem. The method includes processing the plurality of third images to determine one or more second metrics of the optical device. The one or more second metrics include a display leakage metric.

BRIEF DESCRIPTION OF THE DRAWINGS

So that the manner in which the above recited features of the present disclosure can be understood in detail, a more particular description of the disclosure, briefly summarized above, may be had by reference to embodiments, some of which are illustrated in the appended drawings. It is to be noted, however, that the appended drawings illustrate only exemplary embodiments and are therefore not to be considered limiting of its scope, and may admit to other equally effective embodiments.

FIG. **1**A is a perspective, frontal view of a substrate, according to one implementation.

FIG. **1**B is a perspective, frontal view of an optical device, according to one implementation.

FIG. **2** is a schematic view of an optical device metrology system, according to one implementation.

FIG. **3**A is a schematic partial cross-sectional view of the first subsystem shown in FIG. **2**, according to one implementation.

FIG. **3**B is a schematic partial cross-sectional view of the second subsystem shown in FIG. **2**, according to one implementation.

FIG. **3**C is a schematic partial cross-sectional view of the third subsystem shown in FIG. **2**, according to one implementation.

FIG. **4**A is a schematic view of a configuration of the first subsystem shown in FIGS. **2** and **3**A, according to one implementation.

FIG. **4**B is a schematic view of a configuration of the first subsystem shown in FIGS. **2** and **3**A, according to one implementation.

FIG. **4**C is a schematic view of a configuration of the first subsystem shown in FIGS. **2** and **3**A, according to one implementation.

FIG. **4**D is a schematic view of a configuration of the first subsystem shown in FIGS. **2** and **3**A, according to one implementation.

FIG. **4**E is a schematic view of a configuration of the second subsystem shown in FIGS. **2** and **3**B, according to one implementation.

FIG. **4**F is a schematic view of a configuration of the third subsystem shown in FIGS. **2** and **3**C, according to one implementation.

FIG. **4**G is a schematic view of a configuration of the third subsystem shown in FIGS. **2** and **3**C, according to one implementation.

FIG. **5** is a schematic view of an image, according to one implementation.

FIGS. **6**A-**6**C are schematic views of images, according to one implementation.

FIGS. **7**A-**7**C are schematic views of images, according to one implementation.

FIG. **8** is a schematic view of an image, according to one implementation.

FIGS. **9**A-**9**C are schematic views of images, according to one implementation.

FIG. **10** is a schematic block diagram view of a method of analyzing optical devices, according to one implementation.

FIG. **11** is a schematic block diagram view of a method of analyzing optical devices, according to one implementation.

FIG. **12** is a schematic block diagram view of a method of analyzing optical devices, according to one implementation.

To facilitate understanding, identical reference numerals have been used, where possible, to designate identical elements that are common to the figures. It is contemplated that elements and features of one embodiment may be beneficially incorporated in other embodiments without further recitation.

DETAILED DESCRIPTION

Embodiments of the present disclosure relate to optical devices for augmented, virtual, and/or mixed reality applications. In one or more embodiments, an optical device metrology system is configured to measure a plurality of first

metrics and one or more second metrics for optical devices, the one or more second metrics including a display leakage metric.

FIG. **1**A is a perspective, frontal view of a substrate **101**, according to one implementation. The substrate includes a plurality of optical devices **100** disposed on a surface **103** of the substrate **101**. The optical devices **100** are waveguide combiners utilized for virtual, augmented, and/or mixed reality. The optical devices **100** may be part of the substrate **101** such that the optical devices **100** can be cut to be separated from the substrate **101**.

FIG. **1**B is a perspective, frontal view of an optical device **100**, according to one implementation. It is to be understood that the optical devices **100** described herein are exemplary optical devices and that other optical devices (such as optical devices other than waveguide combiners) may be used with or modified to accomplish aspects of the present disclosure.

The optical device **100** includes a plurality of optical device structures **102** disposed on a surface **103** of a substrate **101**. The optical device structures **102** may be nanostructures having sub-micron dimensions (e.g., nano-sized dimensions). Regions of the optical device structures **102** correspond to one or more gratings **104**, such as a first grating **104***a*, a second grating **104***b*, and a third grating **104***c*. In one embodiment, which can be combined with other embodiments, the optical device **100** includes at least the first grating **104***a* corresponding to an input coupling grating and the third grating **104***c* corresponding to an output coupling grating. In one embodiment, which can be combined with other embodiments described herein, the optical device **100** also includes the second grating **104***b* corresponding to an intermediate grating. The optical device structures **102** may be angled or binary. The optical device structures **102** are rectangular. The optical device structures **102** may have other shapes including, but not limited to, circular, triangular, elliptical, regular polygonal, irregular polygonal, and/or irregular shaped cross-sections.

In operation (such as for augmented reality glasses), the input coupling grating **104***a* receives incident beams of light (a virtual image) having an intensity from a microdisplay. The incident beams are split by the optical device structures **102** into T1 beams that have all of the intensity of the incident beams in order to direct the virtual image to the intermediate grating **104***b* (if utilized) or the output coupling grating **104***c*. In one embodiment, which can be combined with other embodiments, the T1 beams undergo total-internal-reflection (TIR) through the optical device **100** until the T1 beams come in contact with the optical device structures **102** of the intermediate grating **104***b*. The optical device structures **102** of the intermediate grating **104***b* diffract the T1 beams to T-1 beams that undergo TIR through the optical device **100** to the optical device structures **102** of the output coupling grating **104***c*. The optical device structures **102** of the output coupling grating **104***c* outcouple the T-1 beams to the user's eye to modulate the field of view of the virtual image produced from the microdisplay from the user's perspective and further increase the viewing angle from which the user can view the virtual image. In one embodiment, which can be combined with other embodiments, the T1 beams undergo total-internal-reflection (TIR) through the optical device **100** until the T1 beams come in contact with the optical device structures **102** of the output coupling grating and are outcoupled to modulate the field of view of the virtual image produced from the microdisplay.

To facilitate ensuring that the optical devices **100** meet image quality standards, metrology metrics of the fabricated optical devices **100** are obtained prior to use of the optical devices **100**.

FIG. **2** is a schematic view of an optical device metrology system **200**, according to one implementation. Embodiments of the optical device metrology system **200** described herein provide for the ability to obtain multiple metrology metrics with increased throughput. The metrology metrics include an angular uniformity metric, a contrast metric, an efficiency metric, a color uniformity metric, a modulation transfer function (MTF) metric, a field of view (FOV) metric, a ghost image metric, an eye box metric, a display leakage metric, a see-through distortion metric, a see-through flare metric, a see-through ghost image metric, and a see-through transmittance metric. The throughput is increased via the utilization of a feeding system coupled to each of one or more subsystems of the optical device metrology system **200**.

The optical device metrology system **200** includes a first subsystem **202**, a second subsystem **204**, and a third subsystem **206**. Each of the first subsystem **202**, the second subsystem **204**, and the third subsystem **206** include a respective body **201**A-**201**C with a first opening **203** and a second opening **205** to allow a stage **207** to move therethrough along a stage path **211** that is parallel to and/or in the X-Y plane. The stage **207** is operable to move in an X-direction, a Y-direction, and a Z-direction in the bodies **201**A-**201**C of the first subsystem **202**, the second subsystem **204**, and the third subsystem **206**. The stage **207** includes a tray **209** operable to retain the optical devices **100** (as shown herein) or one or more substrates **101**. The stage **207** and the tray **209** may be transparent such that the metrology metrics obtained by the first subsystem **202**, the second subsystem **204**, and the third subsystem **206** are not impacted by the translucence of the stage **207** of the tray **209**. The first subsystem **202**, the second subsystem **204**, and the third subsystem **206** are in communication with a controller **208** operable to control operation of the first subsystem **202**, the second subsystem **204**, and the third subsystem **206**. The controller **208** includes instructions stored in a non-transitory computer readable medium (such as a memory). The instructions, when executed by a processor of the controller **208**, cause operations described herein to be conducted. The instructions, when executed by the processor of the controller **208**, cause one or more operations of one or more of the methods **1000**, **1100**, and/or **1200** to be conducted.

The instructions of the controller **208** include a machine learning algorithm and/or an artificial intelligence algorithm to optimize operations. In one embodiment, which can be combined with other embodiments, the instructions of the controller **208** include a machine learning (ML) model that is a regression model and averages data (such as metrics determined herein and/or image data collected using the alignment module **494**). In one example, which can be combined with other examples, the ML model is used to average and merge data to determine optimized pitches and tilts for projection structures, lenses, and cameras. In one example, which can be combined with other examples, the ML model is used to average and merge data to determine optimized powers to apply to light sources and laser sources to generate light beams and laser beams.

The first subsystem **202** is operable to obtain one or more metrology metrics including the angular uniformity metric, the contrast metric, the efficiency metric, the color uniformity metric, the MTF metric, the FOV metric, the ghost image metric, or the eye box metric. The second subsystem

204 is operable to obtain the display leakage metric. The third subsystem 206 is operable to obtain one or more see-through metrology metrics including the see-through distortion metric, the see-through flare metric, the see-through ghost image metric, or the see-through transmittance metric.

The optical device metrology system 200 is configured to determine a display leakage metric, one or more see-through metrics, and one or more other metrology metrics for a plurality of optical devices (such as waveguide combiners) on a single system using a single stage path 211.

FIG. 3A is a schematic partial cross-sectional view of the first subsystem 202 shown in FIG. 2, according to one implementation. The first subsystem 202 may include one or more of configurations 400A, 400B, 400C, 400D shown in FIGS. 4A-4D.

As shown in FIG. 3A, the first subsystem 202 includes an upper portion 304 oriented toward a top side of the optical devices 100 and a lower portion 306 oriented toward a bottom side of the optical device 100.

The first subsystem 202 includes a first body 201A having a first opening 203 and a second opening 205 to allow the stage 207 to move through the first opening 203 and the second opening 205. The stage 207 is configured to move the tray 209 along the stage path 211. The first subsystem 202 includes a first light engine 310 positioned within the first body 201A and mounted above the stage path 211. The first light engine 310 is an upper light engine. The first light engine 310 configured to direct first light beams toward the stage path 211. In one embodiment, which can be combined with other embodiments, the first light beams are directed in a light pattern design toward the stage path 211 and toward one of the optical devices 100 for determination of metrology metrics. The first subsystem 202 includes a first detector 312 positioned within the first body 201A and mounted above the stage path 211 to receive first projected light beams projected upwardly from the stage path 211. The present disclosure contemplates that projected light can be light that is reflected from an optical device or transmitted through an optical device. The first detector 312 is a reflection detector. The first subsystem 202 includes a second detector 316 positioned within the first body 201A and mounted below the stage path 211 to receive second projected light beams projected downwardly from the stage path 211. The second detector 316 is a transmission detector. The first projected light beams and the second projected light beams are projected from an optical device 100. In one embodiment, which can be combined with other embodiments, the first light engine 310 is configured to direct the first light beams toward the input coupling grating of an optical device 100, and the first and second detectors 312, 316 are configured to receive projected light beams that project from the output coupling grating of the optical device 100.

The upper portion 304 of the first subsystem 202 includes an alignment detector 308. The alignment detector 308 includes a camera. The alignment detector 308 is operable to determine a position of the stage 207 and the optical devices 100. The lower portion 306 of the first subsystem 202 includes a code reader 314 mounted below the stage path 211. The code reader 314 is operable to read a code of the optical devices 100, such as a quick response (QR) code or barcode of an optical device 100. The code read by the code reader 314 may include instructions for obtaining one or more metrology metrics for various optical devices 100.

FIG. 3B is a schematic partial cross-sectional view of the second subsystem 204 shown in FIG. 2, according to one implementation. The second subsystem 204 may include at least one configuration 400E as shown in FIG. 4E.

As shown in FIG. 3B, the second subsystem 204 includes the upper portion 304 oriented toward a top side of the optical devices 100 and a lower portion oriented to toward a bottom side of the optical device 100.

The second subsystem 204 includes a second body 201B and a second light engine 360 positioned within the second body 201B and mounted above the stage path 211. The second light engine 360 configured to direct second light beams toward the stage path 211. The upper portion 304 of the first subsystem 202 includes the alignment detector 308.

The second subsystem 204 includes a face illumination detector 318 configured to receive third projected light beams projected upwardly from the stage path 211. The third projected light beams are projected from an optical device 100. The lower portion 306 of the second subsystem 204 includes the code reader 314.

The face illumination detector 318 is operable to capture images to obtain the display leakage metric for the optical device 100. In one embodiment, which can be combined with other embodiments, a light pattern design is directed from the second light engine 360 and toward the optical device 100, and images of light outside a location of the user's eye are obtained and processed to obtain an eye box metric.

FIG. 3C is a schematic partial cross-sectional view of the third subsystem 206 shown in FIG. 2, according to one implementation. The third subsystem 206 may include one or more configurations 400F and/or 400G as shown in FIGS. 4F and 4G.

As shown in FIG. 3C, the third subsystem 206 includes an upper portion 304 oriented toward a top side of the optical devices 100 and a lower portion 306 oriented toward a bottom side of the optical device 100. The third subsystem 206 includes a first light engine 370 mounted above the stage path 211 and configured to direct upper light beams toward the stage path 211, a second light engine 380 mounted below the stage path 211 and configured to direct lower light beams toward the stage path 211, and a detector 390 mounted above the stage path and configured to receive projected light beams projected from the stage path 211. The upper portion 304 of the third subsystem 206 includes the alignment detector 308. The detector 390 is a reflection detector. The detector 390 detects projected (e.g., reflected) light beams that project (e.g., reflect) from the output coupling grating from the top side of the optical devices 100. The lower portion 306 of the third subsystem 206 includes the code reader 314. Each of the first light engine 370, the second light engine 380, and the detector 390 are positioned within a third body 201C of the third subsystem 206.

FIG. 4A is a schematic view of a configuration 400A of the first subsystem 202 shown in FIGS. 2 and 3A, according to one implementation. The configuration 400A includes the first light engine 310, the first detector 312, and the second detector 316.

The first light engine 310 includes a first illuminator 401, and the first illuminator 401 includes a first light source 402 and a first projection structure 404. The first light engine 310 includes a first lens 406 positioned between the first illuminator 401 and the stage path 211. The first light engine 310 includes one or more devices 413 (one is shown in FIG. 4A) positioned between the first lens 406 and the stage path 211. The one or more devices 413 includes one or more of a quarter wave plate or a linear polarizer. In one embodiment, which may be combined with other embodiments described herein, the first light engine 310 is configured to emit (e.g.,

project) light beams in a red spectrum, a green spectrum, and a blue spectrum. In one example, which can be combined with other examples, the first light engine **310** is configured to modulate or pulse light beams between the red spectrum, the green spectrum, and the blue spectrum. In one example, which can be combined with other examples, the first light engine **310** includes three light sources that are each configured to respectively emit light in the red spectrum, light in the green spectrum, and light in the blue spectrum.

The first projection structure **404** includes one or more of a display and/or a reticle. In one embodiment, which can be combined with other embodiments, the first projection structure **404** includes one or more of a microdisplay, a spatial light modulator (SLM), and/or a reticle. In one example, which can be combined with other examples, the SLM includes one or more of a digital micromirror device (DMD) and/or a liquid crystal on silicon (LCOS) emitter.

The first detector **312** includes a first camera **412** and a second lens **410** positioned between the first camera **412** and the stage path **211**. The second detector **316** includes a second camera **416** and a third lens **414** positioned between the second camera **416** and the stage path **211**. In the implementation shown in FIG. **4**A, the first projection structure **404** and the first lens **406** are oriented parallel to the stage path **211**.

The optical device **100** is positioned to align an input coupler **121** of the optical device **100** with the first light engine **310**, and to align an output coupler **122** of the optical device **100** with the first detector **312** and the second detector **316**. First light beams B**1** are directed from the first light engine **310** and toward the input coupler **121** of the optical device **100**. The first detector **312** captures a plurality of first images of first projected light beams BP**1** that project from the output coupler **122** in the red spectrum, the green spectrum, and the blue spectrum. The second detector **316** captures a plurality of second images of second projected light beams BP**2** that project from the output coupler **122** in the red spectrum, the green spectrum, and the blue spectrum.

The first images and the second images are full-field images. One or more of the first images and/or the second images are processed (such as by using the controller **208**) to determine a plurality of first metrics of the optical device **100**.

The plurality of first metrics include an angular uniformity metric. The angular uniformity metric can represent a ratio of light intensities across sections of light fields. For the angular uniformity metric, the processing of one or more of the plurality of first images or the plurality of second images includes comparing one or more first sections of a light pattern design with one or more second sections of the light pattern design within a single image. For the angular uniformity metric, the first light beams B**1** incoupled into the input coupler **121** undergo TIR until the incoupled first light beams B**1** are outcoupled (e.g., projected, such as reflected) to the first detector **312**.

The plurality of first metrics include a contrast metric. The contrast metric can represent a contrast between the brightest captured light within images and the darkest captured light within images. For the contrast metric, the processing of one or more of the plurality of first images or the plurality of second images includes comparing one or more bright sections of a light pattern design with one or more dark sections of the light pattern design within a single image. For the contrast metric, the first light beams B**1** incoupled into the input coupler **121** undergo TIR until the incoupled first light beams B**1** are outcoupled (e.g., projected, such as reflected) to the first detector **312**.

The plurality of first metrics include a color uniformity metric. The color uniformity metric can represent one or more ratios between the red light, the green light, and the blue light in a field. One or more of the plurality of first images, the plurality of second images, and/or the plurality of third images (described below in relation to FIG. **4**E) capture a red spectrum, a green spectrum, and a blue spectrum. For the color uniformity metric, the processing of one or more of the plurality of first images or the plurality of second images includes comparing a red spectrum image with a green spectrum image and a blue spectrum image using the same field area. For the color uniformity metric, the first light beams B**1** incoupled into the input coupler **121** undergo TIR until the incoupled first light beams B**1** are outcoupled (e.g., projected, such as reflected) to the first detector **312**.

The plurality of first metrics include an efficiency metric. For the efficiency metric, prior to the capturing of the plurality of first images and the capturing of the plurality of second images, the second detector **316** is positioned to align with the input coupler **121** of the optical device **100** in a calibration position (shown in ghost for the second detector **316** in FIG. **4**A). While the second detector **316** is in the calibration position, the first light engine **310** directs calibration light beams toward the input coupler **121** of the optical device **100**, and the second detector **316** captures one or more calibration images of calibration projected light beams CP**1** that project from the input coupler **121** of the optical device **100**. The one or more calibration images are full-field images. The second detector **316** is then positioned to align with the output coupler **122** of the optical device **100**. For the efficiency metric, the first light beams B**1** incoupled into the input coupler **121** undergo TIR until the incoupled first light beams B**1** are outcoupled (e.g., projected, such as reflected) to the first detector **312** and outcoupled (e.g., projected such as transmitted) to the second detector **316**. The first images are reflected images and the second images are transmitted images.

For the efficiency metric, the processing of one or more of the plurality of first images or the plurality of second images includes comparing the one or more calibration images with the plurality of first images and the plurality of second images.

The one or more first metrics include a modulation transfer function (MTF) metric. For the MTF metric, prior to the capturing of the plurality of first images and the capturing of the plurality of second images, directing calibration light beams from the first light engine **301** and toward the second detector **316**. The second detector **316** captures one or more calibration images of the calibration light beams while the second detector **316** is misaligned from the optical device **100**. The second detector **316** can be in the calibration position shown in ghost in FIG. **4**A and aligned with the first light engine **310**, while the optical device **100** can be positioned away from the second detector **316** to be out of the fields-of-view of the second detector **316** and the first light engine **310** (as shown in ghost for the optical device **100** in FIG. **4**A). The second detector **316** can then be positioned to align with the first detector **312**. In one embodiment, which can be combined with other embodiments, the second images are captured prior to the capturing of the first images. For the MTF metric, the first light beams B**1** incoupled into the input coupler **121** undergo TIR until the incoupled first light beams B**1** are outcoupled (e.g., projected, such as reflected or transmitted) to the first detector **312** or the second detector **316**.

For the MTF metric, the processing of one or more of the plurality of first images or the plurality of second images includes comparing an outer edge of one or more sections of the one or more calibration images with the same outer edge of the same one or more sections of one or more of the plurality of first images or the plurality of second images.

The plurality of first metrics include an eye box metric. For the eye box metric, the first detector **312** or the second detector **316** is moved to scan across a plurality of locations along the output coupler **122** of the optical device **100** during the capturing of the plurality of first images or the capturing of the plurality of second images. The processing of one or more of the plurality of first images or the plurality of second images includes comparing different images that correspond to different field areas of the output coupler **122**. For the eye box metric, the first light beams B**1** incoupled into the input coupler **121** undergo TIR until the incoupled first light beams B**1** are outcoupled (e.g., projected, such as reflected or transmitted) to the first detector **312** or the second detector **316**.

The plurality of first metrics include a ghost image metric. For the ghost image metric, prior to the capturing of the plurality of first images and the capturing of the plurality of second images, calibration light beams are directed from the first light engine **310** and toward the second detector **316**. The second detector **316** captures one or more calibration images of the calibration light beams while the second detector **316** is misaligned from the optical device **100**. The second detector **316** can be in the calibration position shown in ghost in FIG. **4**A and aligned with the first light engine **310**, while the optical device **100** can be positioned away from the second detector **316** to be out of the fields-of-view of the second detector **316** and the first light engine **310** (as shown in ghost for the optical device **100** in FIG. **4**A). The second detector **316** can then be positioned to align with the first detector **312**. In one embodiment, which can be combined with other embodiments, the second images are captured prior to the capturing of the first images.

For the ghost image metric, the processing of one or more of the plurality of first images or the plurality of second images includes comparing the one or more calibration images with one or more of the plurality of first images or the plurality of second images to determine an offset between the one or more calibration images and one or more of the plurality of first images or the plurality of second images. In one embodiment, which can be combined with other embodiments, the offset is an offset between a light pattern design (such as a reticle) in the one or more calibration images and the light pattern design (such as a reticle) in the first images or the second images.

FIG. **4**B is a schematic view of a configuration **400**B of the first subsystem **202** shown in FIGS. **2** and **3**A, according to one implementation. The configuration **400**B includes the first light engine **310**, the first detector **312**, and the second detector **316**. The first light engine **310** includes the first light source **402**, the first projection structure **404**, and the first lens **406**. The first light engine **310** in the configuration **400**B includes one or more two-dimensional Galvano mirrors **408** (such as an array of two-dimensional Galvano mirrors) configured to turn the first light beams emitted by the first projection structure **404** along a 90-degree turn toward the stage path **211**. In the implementation shown in FIG. **4**B, the first projection structure **404** and the first lens **406** are oriented perpendicularly to the stage path **211**.

The first detector **312** includes the second lens **410** and the first camera **412**. The second detector **316** includes the third lens **414** and the second camera **416**. The first light engine **310**, using the one or more two-dimensional Galvano mirrors **408**, turns the first light beams B**1** along a 90 degree turn toward the stage path **211** and toward the input coupler **121** of the optical device **100**.

In the implementation shown in FIG. **4**B the first lens **406** is positioned between the first illuminator **401** and the stage path **211** along an optical path from the first illuminator and to the stage path **211**. The one or more two-dimensional Galvano mirrors **408** are positioned between the first lens **406** and the stage path **211** along the optical path. The optical path includes the 90 degree turn.

FIG. **4**C is a schematic view of a configuration **400**C of the first subsystem **202** shown in FIGS. **2** and **3**A, according to one implementation. The configuration **400**C is similar to the configuration **400**A shown in FIG. **4**A, and includes one or more of the aspects, features, components, and/or properties thereof.

The configuration **400**C includes an alignment module **494**. The alignment module **494** is shown in relation to the first light engine **310** to align the first projection structure **404** and the first lens **406**. The alignment module **494** includes a laser source **495**, a beam splitter **496**, and an alignment detector **497**. The alignment module **494** includes a pinhole **498** formed in a plate **499**. The alignment detector **497** can include a camera. The alignment module **494** can be used in addition to the alignment detector **308**.

The alignment module **494** is used to conduct an alignment operation. In the alignment operation, the first light source **402**, the first projection structure **404** and the first lens **406** are moved out of alignment from the input coupler **121** of the optical device **100**. The alignment module **494** directs first laser light L**1** through the pinhole **498** and toward the optical device **100** using the laser source **495**. A light intensity of first reflected laser light RL**1** is determined using the alignment detector **497**. The first reflected laser light RL**1** is that first laser light L**1** that reflects off of the optical device **100**. The first reflected laser light RL**1** is directed to the alignment detector **497** using the beam splitter **496**. A tilt and a pitch of the laser source **495** is adjusted to increase the light intensity to an increased light intensity. A first position of the first reflected laser light RL**1** received by the alignment detector **497** is determined at the increased light intensity. The first position is a position of the first reflected laser light RL**1** within an image that the alignment detector **497** captures of the first reflected laser light RL**1**.

In the alignment operation, the first lens **406** is moved to be aligned with the input coupler **121** of the optical device **100** (as shown in ghost in FIG. **4**C), and second laser light is directed through the pinhole **498** and toward the first lens **406**. A tilt and a pitch of the first lens **406** is adjusted until a second position of second reflected laser light received by the alignment detector matches the first position of the first reflected laser light RL**1**. The second reflected laser light is the second laser light that reflects off of the first lens **406** and back toward the beam splitter **496**.

In the alignment operation, the first projection structure **404** is moved to be aligned with the input coupler **121** of the optical device **100** (as shown in ghost in FIG. **4**C), and third laser light is directed through the pinhole **498** and toward the first projection structure **404**. A tilt and a pitch of the first projection structure **404** is adjusted until a third position of third reflected laser light received by the alignment detector matches the first position of the first reflected laser light RL**1**. The third reflected laser light is the third laser light that reflects off of the first projection structure **404** and back toward the beam splitter **496**.

The alignment module **494** can then be moved out of alignment from the input coupler **121** of the optical device **100**, and the first light source **402** can be moved into alignment with the input coupler **121** of the optical device **100**. Lenses, projection structures, and cameras can be aligned using the alignment module **494** and the alignment operation to facilitate accurate operations, such as accurate determination of metrics of optical devices **100**. The operations described for the alignment operation can be combined with the methods **1000**, **1100**, **1200** described below.

FIG. **4**D is a schematic view of a configuration **400**D of the first subsystem **202** shown in FIGS. **2** and **3**A, according to one implementation. The configuration **400**D includes the first light engine **310**, the first detector **312**, and the second detector **316**. The first light engine **310** includes the first light source **402**, the first projection structure **404**, a first lens **406***a* positioned between the first illuminator **401**, and a lens **406***b* positioned between the first lens **406***a* and the stage path **211**. The first light engine **310** includes an adjustable aperture **407** positioned between the lens **406***b* and the first lens **406***a*. The adjustable aperture **407** can be formed in a plate **415**. The adjustable aperture **407** can be adjusted by moving the adjustable aperture **407** upward and downward (such as by moving the plate **415**) and/or by opening and closing the adjustable aperture **407**.

The first light engine **310** can include the one or more devices **413** shown in FIG. **4**A positioned between the lens **406***b* and the stage path **211**. The first detector **312** includes a second lens **410** and a first camera **412**. The second detector **316** includes a third lens **414** and a second camera **416**. In one embodiment, which can be combined with other embodiments, each of the first lens **406**, the first lens **406***a*, the lens **406***b*, the second lens **410** and/or the third lens **414** is formed of the same convex lens structure having the same radius of curvature. Each of the first lens **406**, the first lens **406***a*, the lens **406***b*, the second lens **410** and/or the third lens **414** has the same lens structure. Using the same lens structure for the lenses facilitates compensating for optic aberrations, such as aberrations in reflection and/or transmission of light.

FIG. **4**E is a schematic view of a configuration **400**E of the second subsystem **204** shown in FIGS. **2** and **3**B, according to one implementation. The configuration **400**E includes the second light engine **360** and the face illumination detector **318**. The second light engine **360** includes a second illuminator **461** and a fourth lens **466** positioned between the second illuminator **461** and the stage path **211**. The second illuminator **461** includes a second light source **462** and a second projection structure **464**. The second projection structure **464** and the fourth lens **466** are oriented parallel to the stage path **211**.

The second projection structure **464** includes one or more of a display and/or a reticle. In one embodiment, which can be combined with other embodiments, the second projection structure **464** includes one or more of a microdisplay, a spatial light modulator (SLM), and/or a reticle. In one example, which can be combined with other examples, the SLM includes one or more of a digital micromirror device (DMD) and/or a liquid crystal on silicon (LCOS) emitter.

The face illumination detector **318** includes a third camera **426**, a fifth lens **424** positioned between the third camera **426** and the stage path **211**, and an eye box blocker **420** positioned between the fifth lens **424** and the stage path **211**. The eye box blocker **420** is adjacent a face level **422**.

The optical device **100** is positioned to align the input coupler **121** with the second light engine **360**, and to align the output coupler **122** with the face illumination detector **318**. Second light beams B**2** are directed from the second light engine **360** and toward the input coupler **121** of the optical device **100**. The face illumination detector **318** captures a plurality of third images (in addition to the first images and the second images described in relation to FIG. **4**A) of third projected light beams BP**3** that project from the output coupler **122** of the optical device **100**.

The plurality of third images include the third projected light beams BP**3** that project from the output coupler **122** of the optical device **100** and past the eye box blocker **420** of the face illumination detector **318**. The plurality of third images are processed (such as by using the controller **208**) to determine one or more second metrics of the optical device. The one or more second metrics include a display leakage metric.

FIG. **4**F is a schematic view of a configuration **400**F of the third subsystem **206** shown in FIGS. **2** and **3**C, according to one implementation. The third subsystem **206** includes the first light engine **310** mounted above the stage path **211** and configured to direct upper light beams toward the stage path **211**, and a second light engine **322** mounted below the stage path **211** and configured to direct lower light beams toward the stage path **211**.

The configuration **400**F includes a detector **320** mounted above the stage path **211** and configured to receive projected light beams projected from the stage path **211**. The projected light beams project from the optical device **100**. The first light engine **310** includes the first illuminator **401** and the first lens **406**. The detector **320** includes the second lens **410** and the first camera **412**. The second light engine **322** includes a device and a third lens.

The second light engine **322** comprises a second illuminator **471** and a second lens **476** positioned between the second illuminator **471** and the stage path **211**. The second illuminator **471** includes a second light source **472** and a second projection structure **474**. The second projection structure **474** is a display or a reticle. In one embodiment, which can be combined with other embodiments, a see-through transmittance metric of the optical device **100** is obtained using the configuration **400**F by illuminating the output coupling grating of the optical device **100** with the lower light beams emitted by the second light engine **322**.

The input coupler **121** of the optical device **100** is aligned with the first light engine **310** and the output coupler **122** is aligned with the second light engine **322**, as shown in FIG. **4**F. The detector **320** is aligned (e.g., vertically) with the second light engine **322** and misaligned from the first light engine **310**. The second light engine **322** directs first light beams LB**1** toward the output coupler **122**. Upper light beams LB**2** can be directed toward the input coupler **121** of the optical device **100** from the first light engine **310**. Using the detector **320**, a plurality of first images are captured of the first light beams LB**1** that transmit through the output coupler **122** and project from the output coupler **322** as first projected light beams PB**1**. The optical device **100** is positioned away from the second light engine **322** to misalign the optical device **100** from the second light engine **322** (as shown in ghost in FIG. **4**F for the optical device **100**) and position the optical device **100** out of field-of-views of the second light engine **322** and the detector **320**. Second light beams are directed from the second light engine **322** and toward the detector **320**. The detector captures a plurality of second images of the second light beams that project from the waveguide combiner as second projected light beams. The first images and the second images are full-field images. The first light beams and the second light beams are emitted (sequentially, for example) from the light engine in a red

spectrum, a green spectrum, and a blue spectrum. The plurality of first images and the plurality of second images respectively capture the first light beams and the second light beams in the red spectrum, the green spectrum, and the blue spectrum. In one embodiment, which can be combined with other embodiments, the second images are captured prior to the first images.

The second images are compared with the first images (such as by using the controller **208**) to determine a see-through transmittance metric of the optical device **100**. In one embodiment, which can be combined with other embodiments, the comparing includes comparing a second light intensity of the plurality of second images with a first light intensity of the plurality of first images

FIG. **4**G is a schematic view of a configuration **400**G of the third subsystem **206** shown in FIGS. **2** and **3**C, according to one implementation. The configuration **400**G includes the detector **320**, and the first light engine **310**. The configuration **400**G includes a patterned substrate **490** positioned below the stage path **211**. The patterned substrate **490** includes a pattern design formed thereon. Each of the first light engine **310**, the patterned substrate **490**, and the detector **320** are positioned within the third body **201**C of the third subsystem **206**. In one embodiment, which can be combined with other embodiments, the patterned substrate **490** includes one or more of a plurality of protuberances **493** and/or a plurality of recesses **489** (shown in ghost in FIG. **4**G) that form the pattern design.

In an aligned position shown in FIG. **4**G, the patterned substrate **490** is aligned at least partially below the detector **320**, and the patterned substrate **490** is misaligned at least partially from the first light engine **310**. The optical device **100** below the detector **320** to align the optical device **100** with the detector **320**, and the optical device **100** is positioned above the patterned substrate **490** at a distance D**1** from the patterned substrate **490**.

The patterned substrate **490** directs lower light beams **491** toward the optical device **100**. The lower light beams **491** are reflected off of an upper surface of the patterned substrate **490** toward the optical device **100**. The lower light beams **491** transmit through the optical device **100** and are captured using the detector **320**. In one embodiment, which can be combined with other embodiments, the patterned substrate **490** reflects ambient light as the lower light beams **491**. In one embodiment, which can be combined with other embodiments, the patterned substrate **490** reflects light from a light engine, such as the second light engine **322**. In one embodiment, which can be combined with other embodiments, the configuration **400**G includes the second light engine **322** configured to direct light beams toward the patterned substrate **490**, and the patterned substrate **490** reflects the light beams from the second light engine **322** as the lower light beams **491**. The first light engine **310** includes the first light source **402**, the first projection structure **404**, and the first lens **406**. The detector **320** includes the second lens **410** and the first camera **412**.

The detector **320** captures a plurality of first images of projected light beams **492** that project from the output coupler **122** of the optical device **100** while the patterned substrate **490** is partially aligned with the detector **320** and partially misaligned from the detector **320** (as shown in FIG. **4**G). The plurality of first images capture a red spectrum, a green spectrum, and a blue spectrum of the projected light beams **492**. The plurality of first images are processed (such as by the controller **208**) to determine one or more see-through metrics of the optical device **100**.

The one or more see-through metrics include a see-through flare metric. For the see-through flare metric, the optical device **100** is positioned below the first light engine **310** to align the input coupler **121** of the optical device **100** with the first light engine **310**. First light beams LB**3** are directed from the first light engine **310** and toward the input coupler **121** of the optical device **100**. In such an embodiment, the projected light beams **492** include first light beams LB**3** from the first light engine **310** and lower light beams **491** reflected from the patterned substrate **490**. The first light beams LB**3** are emitted from the first light engine **310** in a light pattern design that is different from the pattern design of the patterned substrate **490**.

The one or more see-through metrics include one or more of a see-through distortion metric and/or a see-through transmittance metric. For the see-through distortion metric and/or the see-through transmittance metric, the projected light beams **492** include light beams **491** reflected from the patterned substrate **490**. The optical device **100** is positioned away from the detector **320** to misalign the optical device **100** from the detector **320** and the patterned substrate **490** (as shown in ghost for the optical device **100** in FIG. **4**G) and position the optical device **100** out of field-of-views of the patterned substrate **490** and the detector **320**. The detector **320** captures a plurality of second images of reflected light beams that reflect from the patterned substrate **490** and toward the detector **320**. The plurality of second images capture the reflected light beams in the red spectrum, the green spectrum, and the blue spectrum. The processing of the plurality of first images includes comparing the plurality of second images with the plurality of first images to determine the see-through distortion metric and/or the see-through transmittance metric. In one embodiment, which can be combined with other embodiments, the second images are captured prior to capturing of the first images.

The one or more see-through metrics include a see-through ghost image metric. For the see-through ghost image metric, the optical device **100** is positioned away from the detector **320** to misalign the optical device **100** from the detector **320** and the patterned substrate **490**. The detector **320** captures a plurality of second images of reflected light beams that reflect from the patterned substrate **490** using the detector **320**. The plurality of second images capture the reflected light beams in the red spectrum, the green spectrum, and the blue spectrum. The processing of the plurality of first images includes determining an offset between the plurality of second images and the plurality of first images. In one embodiment, which can be combined with other embodiments, the offset is an offset between the pattern design (such as a reticle) in the first images and the pattern design (such as a reticle) in the second images.

FIG. **5** is a schematic view of an image **500**, according to one implementation. The image **500** includes a light pattern design (such as a reticle) having dark sections **501** and bright sections **502**. The image **500** can be used to determine the contrast metric and/or the angular uniformity metric.

For the angular uniformity metric, the processing includes comparing one or more first sections **502***a* of the light pattern design with one or more second sections **502***b*, **502***c* of the light pattern design within the image **500**. The first and second sections **502***a*, **502***b*, **502***c* correspond to bright sections **502**. The processing includes comparing light intensities of the one or more first sections **502***a* with light intensities of the one or more second sections **502***b*, **502***c*. The sections **502***a*, **502***b*, **502***c* are disposed at different radii relative to a center of the image **500**.

For the contrast metric, the processing includes comparing a light intensity of one or more bright sections **502***a* of the light pattern design with a light intensity of one or more dark sections **501***a* of the light pattern design within the image **500**. The bright section **502***a* has a light intensity I**1** and the dark section **501***a* has a light intensity I**2**. The contrast metric can be determined and represented by the following Equation 1 as "C":

$$C = \frac{I1 - I2}{I1 - I2} \quad \text{(Equation 1)}$$

FIGS. **6**A-**6**C are schematic views of images **610**, **620**, **630**, according to one implementation. FIG. **6**A shows a red image **610**, FIG. **6**B shows a green image **620**, and FIG. **6**C shows a blue image **630**. The images **610**, **620**, **630** are used to determine the color uniformity metric. The processing includes comparing the images **610**, **620**, **630** using the same field area in each respective image **610**, **620**, **630**. The same field area includes one or more bright sections **602***a*-**602***c*, **603***a*-**603***c* at the same position in each image **610**, **620**, **630**. The color uniformity metric can represent a ratio of light intensities of the one or more bright sections **602***a*-**602***c*, **603***a*-**603***c* in each image **610**, **620**, **630**.

FIGS. **7**A-**7**C are schematic views of images **710**, **720**, **730**, according to one implementation. FIG. **7**A shows a calibration image **710**, FIG. **7**B shows a first image (e.g., a reflected image), and FIG. **7**C shows a second image (e.g., a transmitted image). The images **710**, **720**, **730** can be used to determine the efficiency metric.

The processing includes comparing the calibration image **710** with the first image **720** and the second image **730** using the same field area in each respective image **710**, **720**, **730**. The same field area includes one or more bright sections **702***a*-**702***c* at the same position in each image **710**, **720**, **730**. The processing includes comparing light intensities of the one or more bright sections **702***a*-**702***c* in the images **710**, **720**, **730**. The calibration image **710** includes a light intensity IC**1** for the bright section **702***a*, the first image **720** includes a light intensity IR**1** for the bright section **702***b*, and the second image **730** includes a light intensity IT**1** for the bright section **702***c*.

The efficiency metric can be determined and represented by the following Equation 2 as "E":

$$E = \left(\frac{IR1}{IC1}\right) * \left(\frac{IT1}{IC1}\right) \quad \text{(Equation 2)}$$

FIG. **8** is a schematic view of an image **800**, according to one implementation. The image **800** includes a light pattern design (such as a reticle) having dark sections and bright sections. The image **800** can be used to determine the MTF metric. The processing includes comparing an edge area **832** of the one or more calibration images with the same edge area (e.g., the same position within the image) of the same one or more sections of one or more of the plurality of first images or the plurality of second images. The edge area **832** at least partially encompasses an outer edge **831** of one or more sections (such as a bright section).

FIGS. **9**A-**9**C are schematic views of images **910**, **920**, **930**, according to one implementation. Each of the images **910**, **920**, **930** shows a light pattern design that can be used for light directed by the first light engine **310**, the first light engine **370**, the second light engine **360**, the first light engine **370**, the second light engine **380**, the second light engine **322**, and/or the patterned substrate **490**. Each of the images **910**, **920**, **930** can be used to determine the ghost image metric and/or other metrics (such as other first metrics). Each of the images **910**, **920**, **930** respectively includes a plurality of dark sections **901***a*-**901***c* and a plurality of bright sections **902***a*-**902***c*.

FIG. **10** is a schematic block diagram view of a method **1000** of analyzing optical devices, according to one implementation.

Operation **1002** of the method **1000** includes positioning an optical device within a first subsystem to align the optical device with a first detector and a second detector of the first subsystem.

Operation **1004** includes directing first light beams from a first light engine of the first subsystem and toward the optical device. In one embodiment, which can be combined with other embodiments, the directing includes turning the first light beams along a 90 degree turn toward the stage path.

Operation **1006** includes capturing a plurality of first images of first projected light beams that project from the optical device using the first detector of the first subsystem.

Operation **1008** includes capturing a plurality of second images of second projected light beams that project from the optical device using the second detector of the first subsystem.

Operation **1010** includes processing one or more of the plurality of first images or the plurality of second images to determine a plurality of first metrics of the optical device. The first metrics include an angular uniformity metric, a contrast metric, an efficiency metric, a color uniformity metric, a modulation transfer function (MTF) metric, a field of view (FOV) metric, a ghost image metric, and/or an eye box metric.

Operation **1012** includes positioning the optical device within a second subsystem to align the optical device with a face illumination detector of the second subsystem.

Operation **1014** includes directing second light beams from a second light engine of the second subsystem and toward the optical device.

Operation **1016** includes capturing a plurality of third images of third projected light beams that project from the optical device using the face illumination detector of the second subsystem.

Operation **1018** includes processing the plurality of third images to determine one or more second metrics of the optical device. The one or more second metrics include a display leakage metric.

FIG. **11** is a schematic block diagram view of a method **1100** of analyzing optical devices, according to one implementation.

Operation **1102** of the method **1100** includes positioning an optical device above a light engine to align the optical device with the light engine.

Operation **1104** includes directing first light beams from the light engine and toward the optical device.

Operation **1106** includes capturing a plurality of first images of the first light beams that project from the optical device as first projected light beams using a detector.

Operation **1108** includes positioning the optical device away from the light engine to misalign the optical device from the light engine.

Operation **1110** includes directing second light beams from the light engine and toward the detector.

Operation **1112** includes capturing a plurality of second images of the second light beams.

Operation **1114** includes comparing the plurality of second images with the plurality of first images to determine a see-through transmittance metric of the optical device.

FIG. **12** is a schematic block diagram view of a method **1200** of analyzing optical devices, according to one implementation.

Operation **1202** of the method **1200** includes positioning an optical device below a detector to align the optical device with the detector.

Operation **1204** includes positioning the optical device above a patterned substrate at a distance from the patterned substrate. The patterned substrate includes a pattern design formed thereon.

Operation **1206** includes capturing a plurality of first images of projected light beams that project from the optical device using a detector while the patterned substrate is at least partially aligned with the detector.

Operation **1208** includes processing the plurality of first images to determine one or more see-through metrics of the optical device. The one or more see-through metrics include one or more of a see-through transmittance metric, a see-through distortion metric, a see-through flare metric, and/or a see through ghost image metric.

Benefits of the present disclosure include using a single optical device metrology system **200** to determine multiple metrology metrics (such as a display leakage metric, one or more see-through metrics, and one or more other metrology metrics) for a plurality of optical devices (such as waveguide combiners) on a single system using a single stage path **211**. In one embodiment, which can be combined with other embodiments, a single system using a single stage path **211** can be used to determine a display leakage metric, an angular uniformity metric, a contrast metric, an efficiency metric, a color uniformity metric, a modulation transfer function (MTF) metric, a field of view (FOV) metric, a ghost image metric, an eye box metric, a see-through distortion metric, a see-through flare metric, a see-through ghost image metric, and a see-through transmittance metric. Benefits also include increased throughput, reduced delays and costs, and enhanced efficiencies. The throughput is increased via the utilization of a feeding system coupled to each subsystem of the optical device metrology system.

It is contemplated that one or more aspects disclosed herein may be combined. As an example, one or more aspects, features, components, and/or properties of the optical device metrology system **200**, the first subsystem **202**, the second subsystem **204**, the third subsystem **206**, the configuration **400**A, the configuration **400**B, configuration **400**C, the configuration **400**D, the configuration **400**E, the configuration **400**F, the configuration **400**G, the image **500**, the images **610-630**, the images **710-730**, the image **800**, the images **910-930**, the method **1000**, the method **1100**, and/or the method **1200** may be combined. As an example, one or more of the operations described in relation to the optical device metrology system **200**, the subsystems **202**, **204**, **206**, and/or the configurations **400**A-**400**G can be combined with one or more of the operations described in relation to the method **1000**, the method **1100**, and/or the method **1200**. Moreover, it is contemplated that one or more aspects disclosed herein may include some or all of the aforementioned benefits.

While the foregoing is directed to embodiments of the present disclosure, other and further embodiments of the disclosure may be devised without departing from the basic scope thereof, and the scope thereof is determined by the claims that follow.

What is claimed is:

1. An optical device metrology system, comprising:

a stage configured to move a tray along a stage path;

a first subsystem comprising:

a first body having a first opening and a second opening to allow the stage to move through the first opening and the second opening,

a first light engine positioned within the first body and mounted above the stage path, the first light engine configured to direct first light beams toward the stage path, the first light engine comprising:

a first illuminator, the first illuminator comprising a first light source and a first projection structure,

a first lens positioned between the first illuminator and the stage path along an optical path, wherein the first projection structure and the first lens are oriented perpendicularly to the stage path, and

one or more two-dimensional Galvano mirrors configured to turn the first light beams along a 90 degree turn toward the stage path, and

a first detector positioned within the first body and mounted above the stage path to receive first projected light beams projected upwardly from the stage path, and

a second detector positioned within the first body and mounted below the stage path to receive second projected light beams projected downwardly from the stage path; and

a second subsystem comprising:

a second body having a first opening and a second opening to allow the stage to move through the first opening and the second opening of the second body,

a second light engine positioned within the second body and mounted above the stage path, the second light engine configured to direct second light beams toward the stage path, and

a face illumination detector configured to receive third projected light beams projected upwardly from the stage path; and

a controller in communication with the stage, the first subsystem, and the second subsystem, the controller comprising instructions that, when executed, cause:

the stage to position an optical device within the first subsystem to align the optical device with the first detector and the second detector of the first subsystem;

the first light engine to direct first light beams toward the optical device, the directing comprising turning the first light beams along a **90** degree turn toward the stage path;

the first detector to capture a plurality of first images of first projected light beams that project from the optical device;

the second detector to capture a plurality of second images of second projected light beams that project from the optical device;

processing of one or more of the plurality of first images or the plurality of second images to determine a plurality of first metrics of the optical device;

the stage to position the optical device within the second subsystem to align the optical device with the face illumination detector of the second subsystem;

the second light engine to direct second light beams toward the optical device;

the face illumination detector to capture a plurality of third images of third projected light beams that project from the optical device;

processing of the plurality of third images to determine one or more second metrics of the optical device, the one or more second metrics including a display leakage metric.

2. The optical device metrology system of claim **1**, wherein one or more of the plurality of first images, the plurality of second images, or the plurality of third images capture a red spectrum, a green spectrum, and a blue spectrum.

3. An optical device metrology system, comprising:

a stage configured to move a tray along a stage path;

a first subsystem comprising:

a first body having a first opening and a second opening to allow the stage to move through the first opening and the second opening,

a first light engine positioned within the first body and mounted above the stage path, the first light engine configured to direct first light beams toward the stage path, the first light engine comprising:

a first illuminator, the first illuminator comprising a first light source and a first projection structure,

a first lens positioned between the first illuminator and the stage path along an optical path, wherein the first projection structure and the first lens are oriented perpendicularly to the stage path,

one or more two-dimensional Galvano mirrors configured to turn the first light beams along a 90 degree turn toward the stage path, and

a first detector positioned within the first body and mounted above the stage path to receive first projected light beams projected upwardly from the stage path, and

a second detector positioned within the first body and mounted below the stage path to receive second projected light beams projected downwardly from the stage path; and

a second subsystem comprising:

a second body having a first opening and a second opening to allow the stage to move through the first opening and the second opening of the second body,

a second light engine positioned within the second body and mounted above the stage path, the second light engine configured to direct second light beams toward the stage path, and

a face illumination detector configured to receive third projected light beams projected upwardly from the stage path.

4. The optical device metrology system of claim **3**, wherein the first projection structure and the first lens of the first subsystem are oriented perpendicularly to the stage path, and the first light engine further comprises an alignment module comprising a laser source, a beam splitter, a pinhole, and an alignment detector.

5. The optical device metrology system of claim **4**, wherein the first detector comprises a first camera and a second lens positioned between the first camera and the stage path, and the second detector comprises a second camera and a third lens positioned between the second camera and the stage path.

6. The optical device metrology system of claim **5**, wherein the second light engine of the second subsystem comprises a second illuminator and a fourth lens positioned between the second illuminator and the stage path, the second illuminator comprising a second light source and a second projection structure.

7. The optical device metrology system of claim **6**, wherein the second projection structure and the fourth lens are oriented parallel to the stage path.

8. The optical device metrology system of claim **7**, wherein the face illumination detector of the second subsystem comprises:

a third camera;

a fifth lens positioned between the third camera and the stage path; and

an eye box blocker positioned between the fifth lens and the stage path.

9. The optical device metrology system of claim **8**, further comprising a controller in communication with the first subsystem and the second subsystem, the controller comprises instructions that, when executed, determine:

one or more first metrics of an optical device using the first subsystem, the one or more first metrics including one or more of an angular uniformity metric, a contrast metric, an efficiency metric, a color uniformity metric, a modulation transfer function (MTF) metric, a field of view (FOV) metric, a ghost image metric, or an eye box metric; and

one or more second metrics of the optical device using the second subsystem, the one or more second metrics including a display leakage metric.

10. A method of analyzing optical devices, comprising:

positioning an optical device within a first subsystem to align the optical device with a first detector and a second detector of the first subsystem;

directing first light beams from a first light engine of the first subsystem and toward the optical device, the directing comprising turning the first light beams along a 90 degree turn toward a stage path via one or more two-dimensional Galvano mirrors, wherein the first light beams are emitted by a first projection structure through a first lens, the first projection structure and the first lens oriented perpendicularly to the stage path;

capturing a plurality of first images of first projected light beams that project from the optical device using the first detector of the first subsystem;

capturing a plurality of second images of second projected light beams that project from the optical device using the second detector of the first subsystem;

processing one or more of the plurality of first images or the plurality of second images to determine a plurality of first metrics of the optical device;

positioning the optical device within a second subsystem to align the optical device with a face illumination detector of the second subsystem;

directing second light beams from a second light engine of the second subsystem and toward the optical device;

capturing a plurality of third images of third projected light beams that project from the optical device using the face illumination detector of the second subsystem;

processing the plurality of third images to determine one or more second metrics of the optical device, the one or more second metrics including a display leakage metric.

11. The method of claim **10**, further comprising conducting an alignment operation for the first light engine, the alignment operation comprising:

directing first laser light through a pinhole and toward the optical device using a laser source;

determining a light intensity of first reflected laser light using an alignment detector;

adjusting a tilt and a pitch of the laser source to increase the light intensity to an increased light intensity;

determining a first position of the first reflected laser light received by the alignment detector at the increased light intensity;

directing second laser light through the pinhole and toward a first lens of the first light engine;

adjusting a tilt and a pitch of the first lens until a second position of second reflected laser light received by the alignment detector matches the first position;

directing third laser light through the pinhole and toward a first projection structure of the first light engine; and

adjusting a tilt and a pitch of the first projection structure until a third position of third reflected laser light received by the alignment detector matches the first position.

12. The method of claim **10**, wherein the first light beams are directed toward an input coupler of the optical device, the plurality of first images are captured while the first detector is aligned with an output coupler of the optical device, and the plurality of second images are captured while the second detector is aligned with the output coupler of the optical device.

13. The method of claim **10**, wherein the plurality of first metrics include an angular uniformity metric, and the processing of one or more of the plurality of first images or the plurality of second images comprises:

comparing one or more first sections of a light pattern design with one or more second sections of the light pattern design within a single image.

14. The method of claim **10**, wherein the plurality of first metrics include a contrast metric, and the processing of one or more of the plurality of first images or the plurality of second images comprises:

comparing one or more bright sections of a light pattern design with one or more dark sections of the light pattern design within a single image.

15. The method of claim **10**, wherein:

the plurality of first metrics include a color uniformity metric;

one or more of the plurality of first images, the plurality of second images, or the plurality of third images capture a red spectrum, a green spectrum, and a blue spectrum; and

the processing of one or more of the plurality of first images or the plurality of second images comprises:

comparing a red spectrum image with a green spectrum image and a blue spectrum image using the same field area.

16. The method of claim **10**, wherein the plurality of first metrics include an efficiency metric, and the method further comprises, prior to the capturing of the plurality of first images and the capturing of the plurality of second images:

positioning the second detector to align with an input coupler of the optical device;

directing calibration light beams from the first light engine of the first subsystem and toward the optical device;

capturing one or more calibration images of calibration projected light beams that project from the input coupler of the optical device using the second detector; and

positioning the second detector to align with an output coupler of the optical device.

17. The method of claim **10**, wherein the one or more first metrics include a modulation transfer function (MTF) metric, and the method further comprises, prior to the capturing of the plurality of first images and the capturing of the plurality of second images:

directing calibration light beams from the first light engine of the first subsystem and toward the second detector; and

capturing one or more calibration images of the calibration light beams using the second detector while the second detector is misaligned from the optical device;

wherein the processing of one or more of the plurality of first images or the plurality of second images comprises comparing an outer edge of one or more sections of the one or more calibration images with the same outer edge of the same one or more sections of one or more of the plurality of first images or the plurality of second images.

18. The method of claim **10**, wherein:

the plurality of first metrics include an eye box metric;

the first detector or the second detector is moved to scan across a plurality of locations along an output coupler of the optical device during the capturing of the plurality of first images or the capturing of the plurality of second images; and

the processing of one or more of the plurality of first images or the plurality of second images comprises comparing different images that correspond to different field areas of the output coupler.

19. The method of claim **10**, wherein the plurality of first metrics include a ghost image metric, and the method further comprises, prior to the capturing of the plurality of first images and the capturing of the plurality of second images:

directing calibration light beams from the first light engine of the first subsystem and toward the second detector; and

capturing one or more calibration images of the calibration light beams using the second detector while the second detector is misaligned from the optical device;

wherein the processing of one or more of the plurality of first images or the plurality of second images comprises comparing the one or more calibration images with one or more of the plurality of first images or the plurality of second images to determine an offset between the one or more calibration images and one or more of the plurality of first images or the plurality of second images.

20. The method of claim **19**, wherein the plurality of third images include the third projected light beams that project from the optical device and past an eyebox blocker of the face illumination detector.

* * * * *