US012663647B2

(12) **United States Patent**
Fu et al.

(10) **Patent No.: US 12,663,647 B2**
(45) **Date of Patent: Jun. 23, 2026**

(54) **METALENS STACK ON WAVEGUIDE COMBINERS FOR AR/VR GLASSES**

(71) Applicant: **Applied Materials, Inc.**, Santa Clara, CA (US)

(72) Inventors: **Jinxin Fu**, Fremont, CA (US); **Ludovic Godet**, Sunnyvale, CA (US)

(73) Assignee: **Applied Materials, Inc.**, Santa Clara, CA (US)

(*) Notice: Subject to any disclaimer, the term of this patent is extended or adjusted under 35 U.S.C. 154(b) by 214 days.

(21) Appl. No.: **18/280,901**

(22) PCT Filed: **Mar. 7, 2022**

(86) PCT No.: **PCT/US2022/019157**
§ 371 (c)(1),
(2) Date: **Sep. 7, 2023**

(87) PCT Pub. No.: **WO2022/192142**
PCT Pub. Date: **Sep. 15, 2022**

(65) **Prior Publication Data**

US 2024/0151973 A1 May 9, 2024

Related U.S. Application Data

(60) Provisional application No. 63/158,665, filed on Mar. 9, 2021.

(51) **Int. Cl.**
G02B 27/01 (2006.01)
G02B 1/00 (2006.01)
(Continued)

(52) **U.S. Cl.**
CPC ***G02B 27/0172*** (2013.01); ***G02B 1/002*** (2013.01); ***G02B 3/0062*** (2013.01);
(Continued)

(58) **Field of Classification Search**
CPC .. G02B 27/0172; G02B 1/002; G02B 3/0062; G02B 5/1819; G02B 27/106; G02B 2027/0178; G02B 2207/101
(Continued)

(56) **References Cited**

U.S. PATENT DOCUMENTS

2006/0245052 A1 11/2006 Wilt et al.
2018/0284460 A1 10/2018 Cheng et al.
(Continued)

FOREIGN PATENT DOCUMENTS

CN 112041716 A 12/2020
TW I665481 B 7/2019

OTHER PUBLICATIONS

International Search Report and Written Opinion dated Jun. 27, 2022 for Application No. PCT/US2022/019157.
(Continued)

Primary Examiner — William Choi
(74) *Attorney, Agent, or Firm* — Patterson + Sheridan, LLP

(57) **ABSTRACT**

Embodiments of the present application generally relate to augmented reality and virtual reality glasses having stacked lenses. The augmented reality (AR) and virtual reality (VR) glasses includes a pair of lenses retained by a frame. A lens stack is utilized in the pair of lenses. The lens stack may include multiple metasurfaces that improve the focus adjustment for both the real and virtual images as well as a prescription lens or prescription metasurface in the lens stack. The metasurfaces are coupled to a waveguide combiner to assist in overlaying virtual images on ambient environments. By utilizing a lens stack, the total weight of the glasses will decrease.

19 Claims, 6 Drawing Sheets

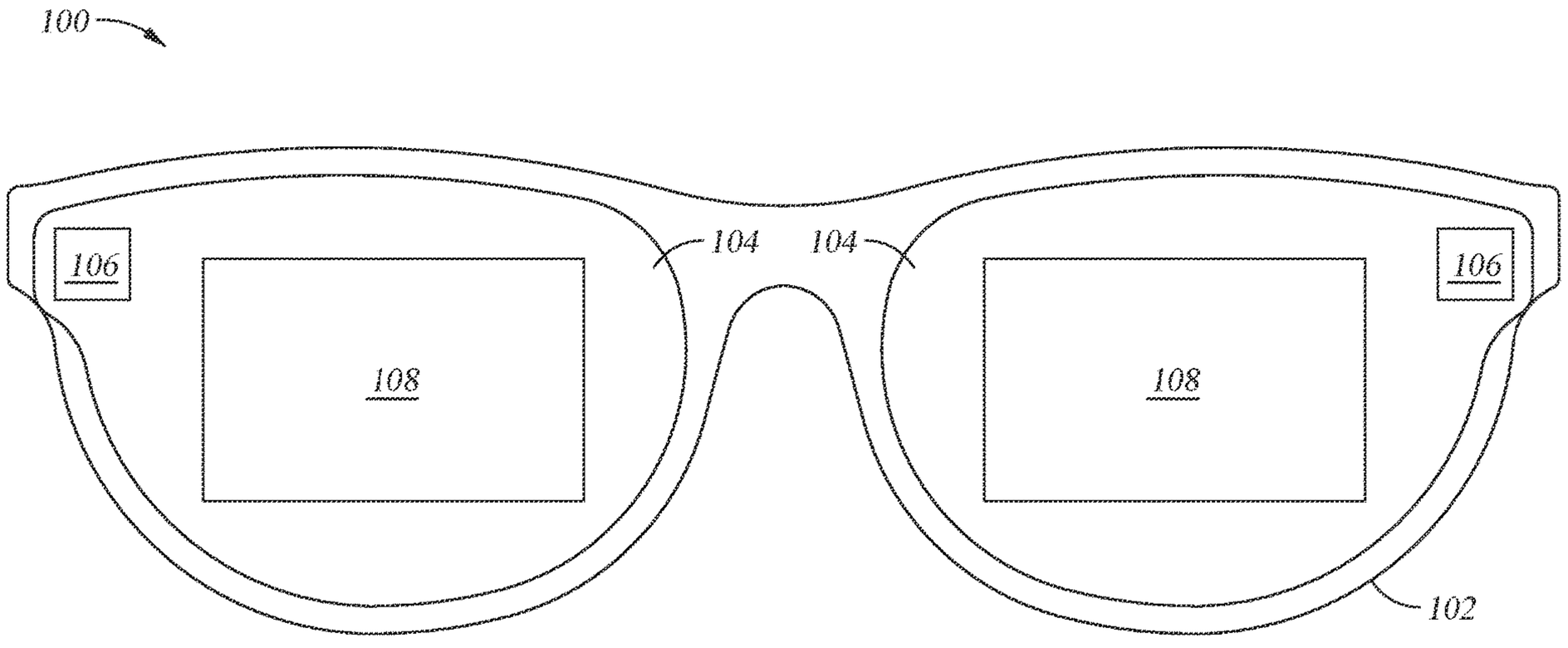

(51) **Int. Cl.**
G02B 3/00 (2006.01)
G02B 5/18 (2006.01)
G02B 27/10 (2006.01)

(52) **U.S. Cl.**
CPC ***G02B 5/1819*** (2013.01); ***G02B 27/106*** (2013.01); *G02B 2027/0178* (2013.01); *G02B 2207/101* (2013.01)

(58) **Field of Classification Search**
USPC 359/630; 345/7–9
See application file for complete search history.

(56) **References Cited**

U.S. PATENT DOCUMENTS

2019/0129178	A1	5/2019	Patterson et al.
2019/0302358	A1	10/2019	Lin et al.
2020/0271941	A1	8/2020	Riley, Jr. et al.
2020/0379184	A1	12/2020	Vora

OTHER PUBLICATIONS

Taiwanese Office Action for Application No. 111108532 dated Nov. 26, 2025.

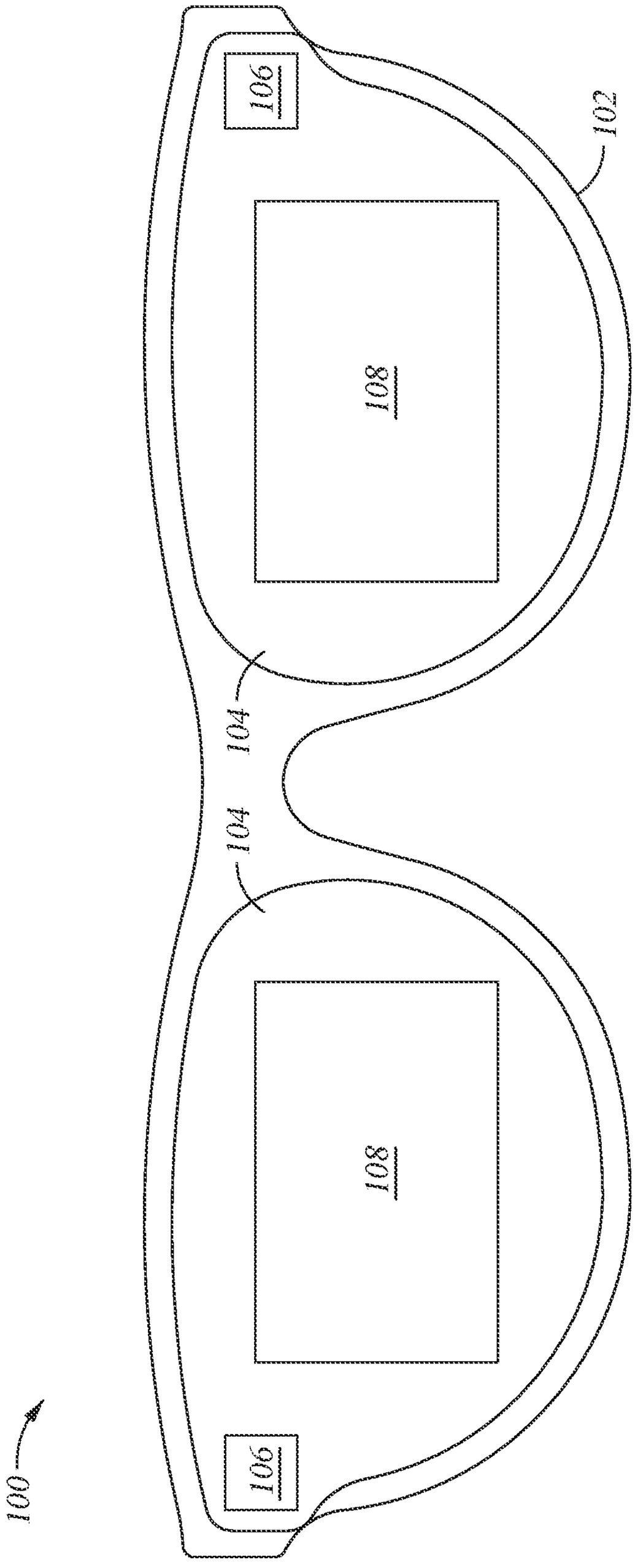

Fig. 1

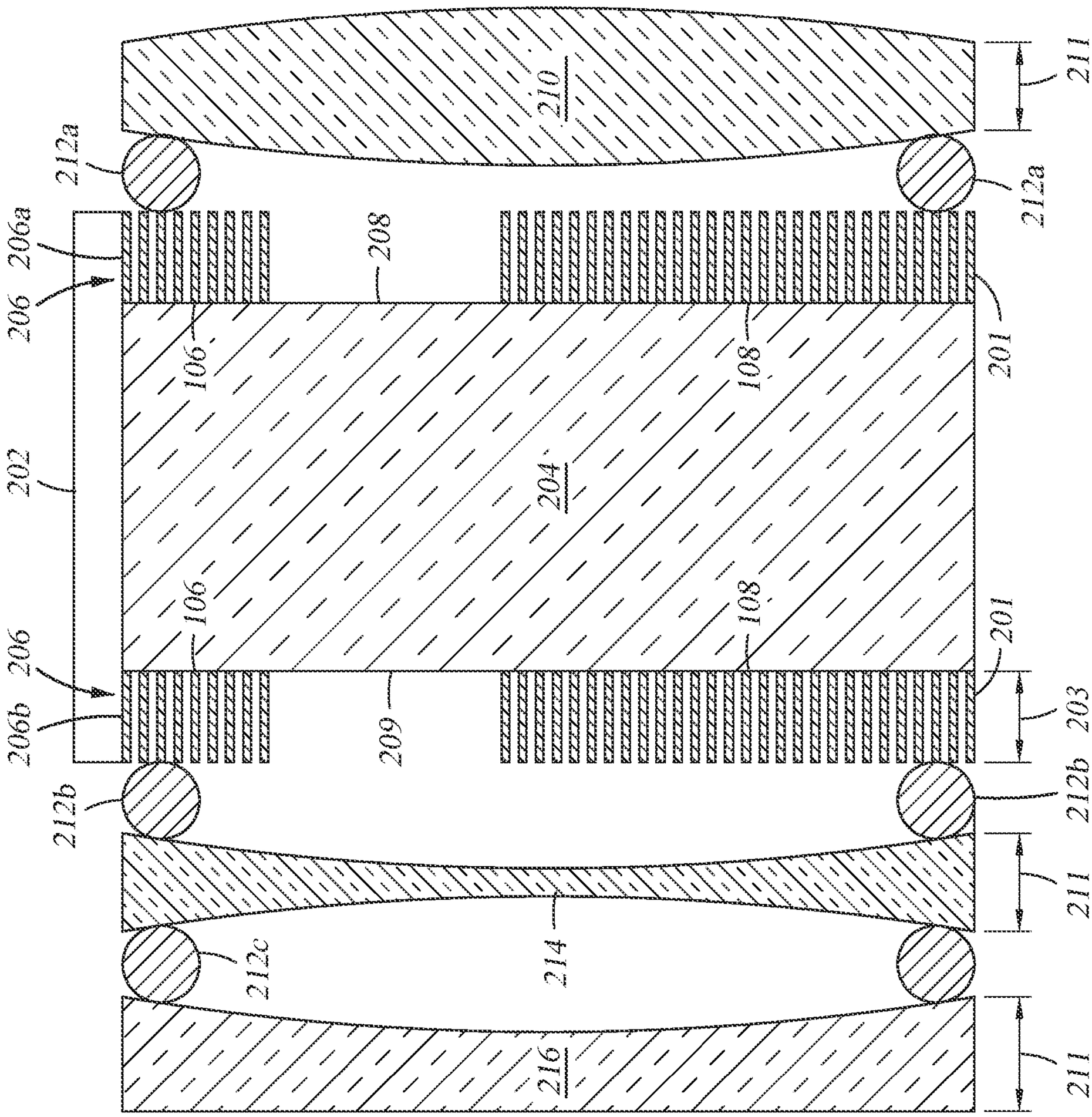
200A
202
206
206a
206b
212a
212b
212c
210
211
204
216
214
208
209
106
108
201
203

Fig. 2A

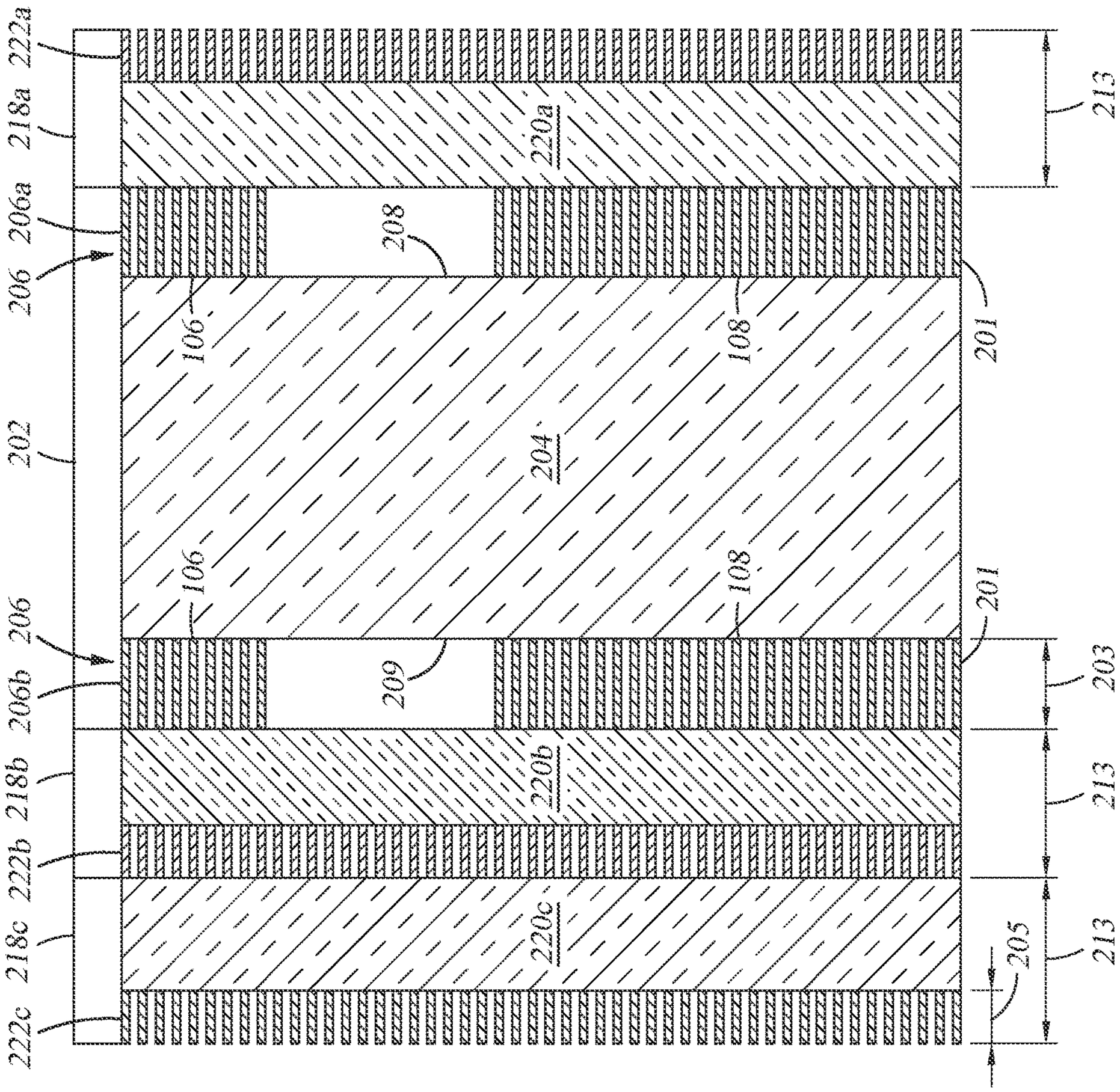
222a
218a
206a
206
202
106
208
220a
213
201
108
204
209
206b
206
218b
222b
220b
203
213
218c
222c
220c
205
213
200B

Fig. 2B

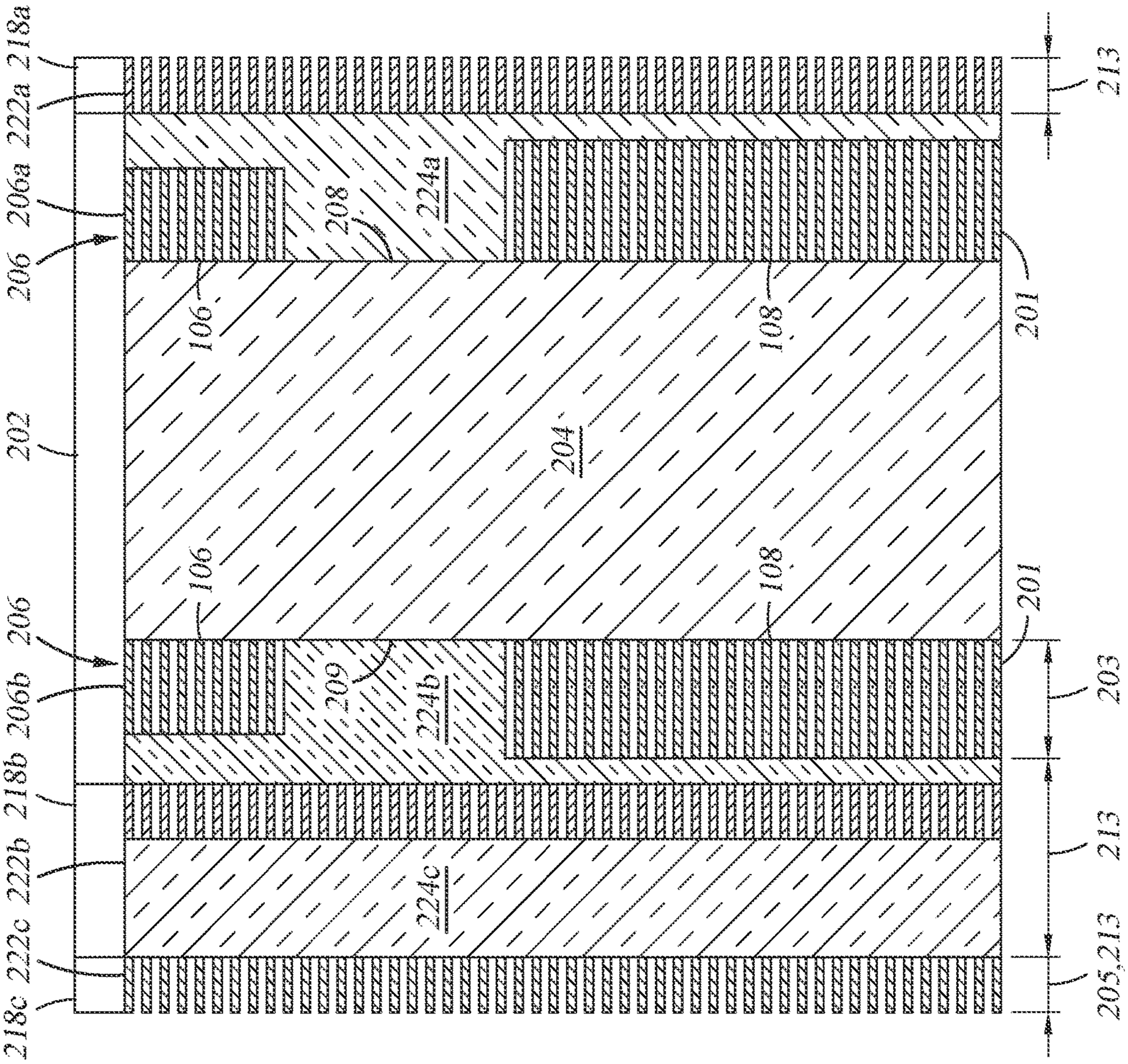
200C
202
204
206
206a
206b
208
209
201
218a
218b
218c
222a
222b
222c
224a
224b
224c
106
108
213
203
205,213

Fig. 2C

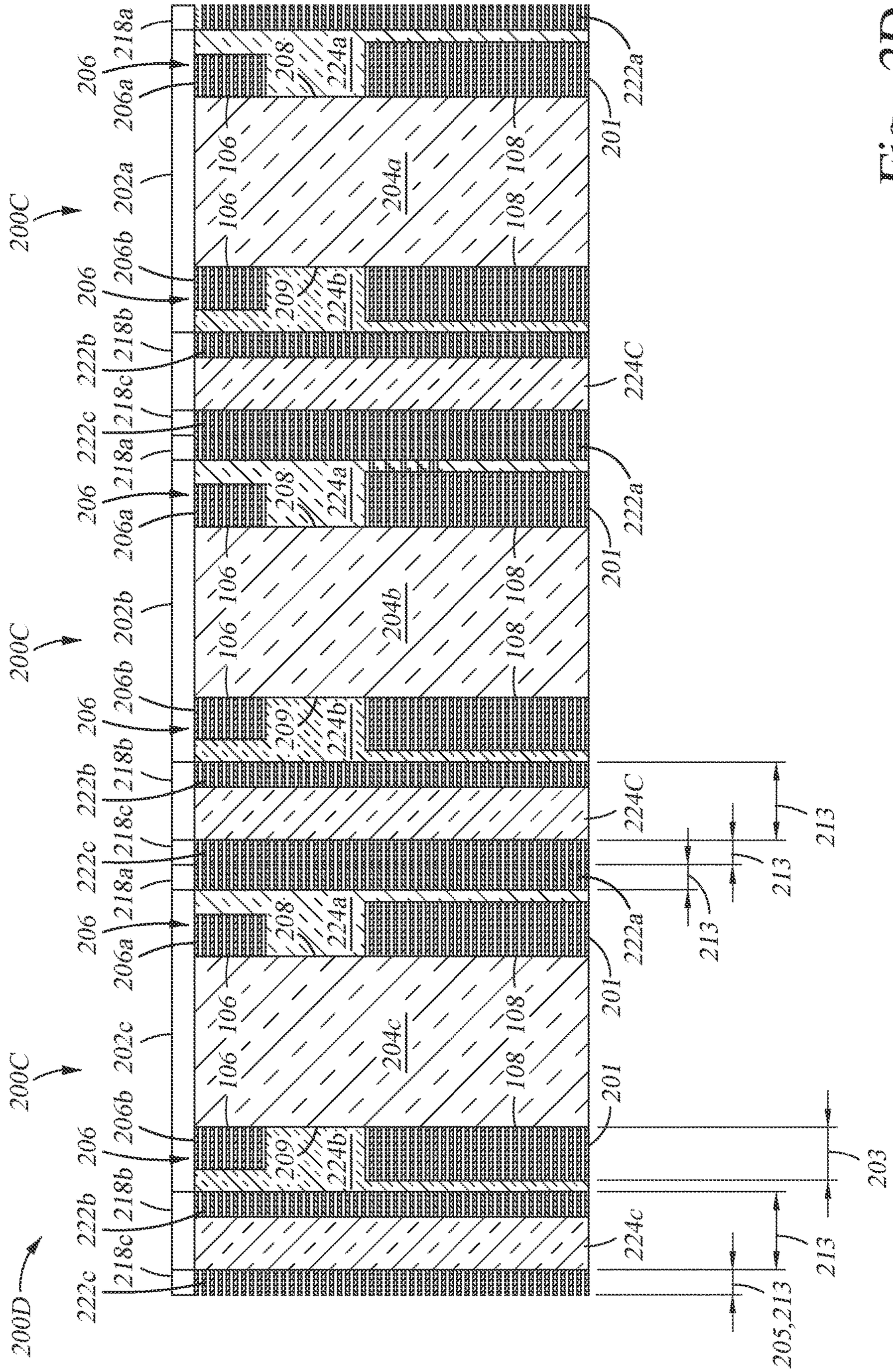
200C
206
218a
206a
202a
206b
218b
222b
206
218c
222c
206
218a
206a
202b
206b
218b
222b
206
218c
222c
206
218a
206a
202c
206b
218b
222b
206
218c
222c
200D
208
224a
106
204a
108
201
222a
209
224b
204b
224C
213
204c
224c
205,213
203

Fig. 2D

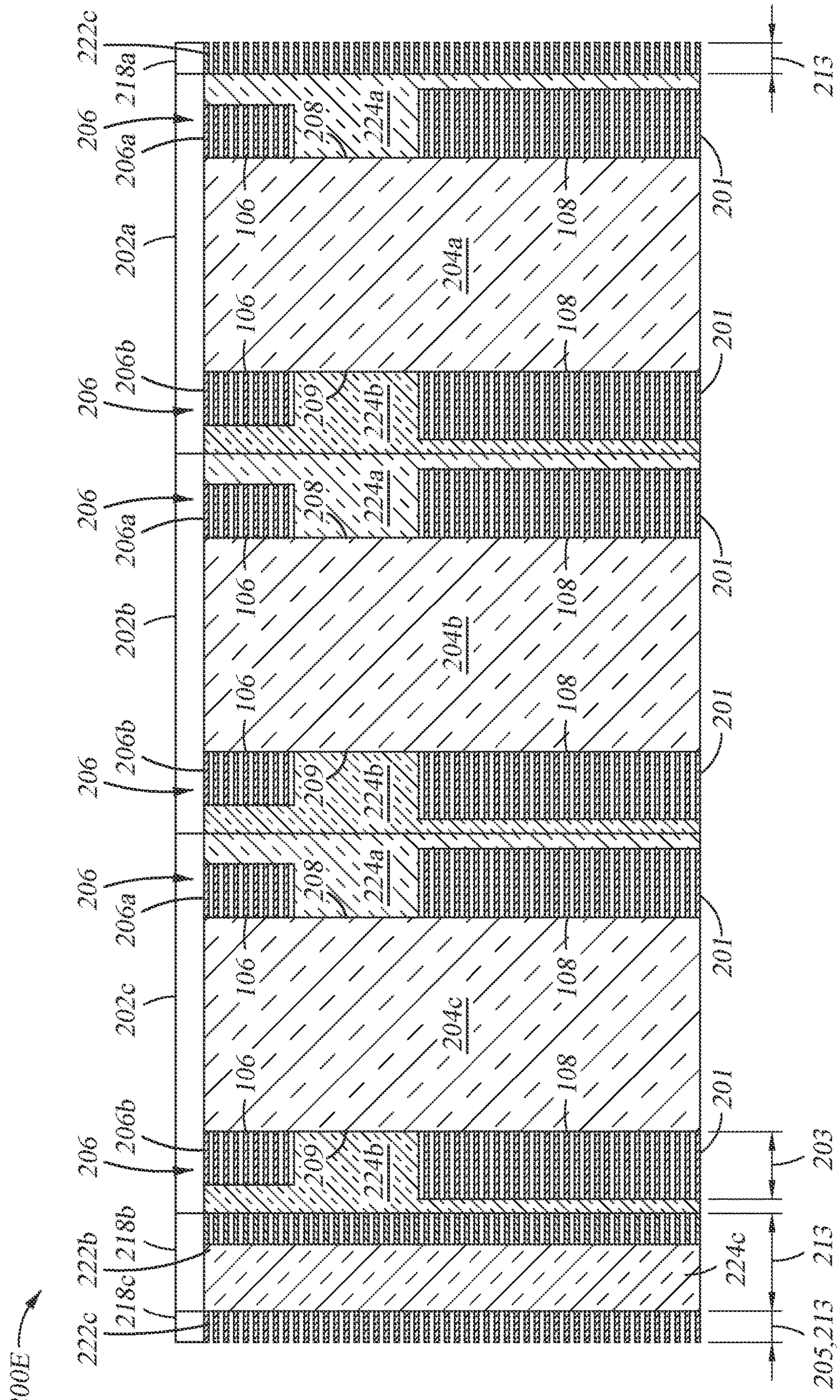
200E
222c
218a
206
206a
202a
208
224a
106
204a
108
201
213
206b
202b
209
224b
204b
202c
204c
222b
218b
218c
224c
205,213
203

Fig. 2E

METALENS STACK ON WAVEGUIDE COMBINERS FOR AR/VR GLASSES

BACKGROUND

Field

Embodiments of the present disclosure generally relate to optical devices. More specifically, embodiments described herein relate to augmented reality and virtual reality glasses having stacked lenses.

Description of the Related Art

Virtual reality (VR) is generally considered to be a computer generated simulated environment in which a user has an apparent physical presence. A virtual reality experience can be generated in 3D and viewed with a head-mounted display (HMD), such as glasses or other wearable display devices that have near-eye display panels as lenses to display a virtual reality environment that replaces an actual environment.

Augmented reality (AR), however, enables an experience in which a user can still see through the display lenses of the glasses or other HMD device to view the surrounding environment, yet also see images of virtual objects that are generated for display and appear as part of the environment. Augmented reality can include any type of input, such as audio and haptic inputs, as well as virtual images, graphics, and video that enhances or augments the environment that the user experiences. As an emerging technology, there are many challenges and design constraints with augmented reality.

One such challenge is efficiently and cost effectively manufacturing VR and AR glasses. In addition to an optical device, such as a waveguide combiner to assist in overlaying virtual images on ambient environments, the VR and AR glasses may utilize additional lenses to focus the virtual image. Therefore, a multiple lens arrangement may be employed for the VR and AR glasses such that the virtual image plane is closer to the retina of the user's eye and such that a real image is focused. The multiple lenses of the arrangement may be spaced apart in the VR and AR glasses which can lead to a heavy and bulky form factor. The multiple lens arrangement may also use a post alignment process to align the multiple lenses, thus increasing manufacturing time and cost. Additionally, users who require prescription eyeglasses should account for their eyeglasses when wearing the VR and AR glasses, leading to an uncomfortable user experience. Accordingly, what is needed in the art are augmented reality and virtual reality glasses having stacked lenses.

SUMMARY

In one embodiment, an optical device is provided. The optical device includes a first waveguide combiner. The first waveguide combiner includes a first plurality of gratings disposed on a first surface of a substrate and a second plurality of gratings disposed on a second surface of the substrate. The optical device includes a first encapsulation layer disposed on the first plurality of gratings and a second encapsulation layer disposed on the second plurality of gratings. The optical device further includes a first metasurface coupled to the first encapsulation layer. The first metasurface includes a first plurality of optical device structures. The optical device further includes a second metasurface coupled to the second encapsulation layer. The second metasurface includes a second plurality of optical device structures.

In another embodiment, an optical device is provided. The optical device includes a waveguide combiner. The waveguide combiner includes a first plurality of gratings disposed on a first surface of a substrate and a second plurality of gratings disposed on a second surface of the substrate. The optical device further includes a first metasurface coupled to the first plurality of gratings. The first metasurface includes a first plurality of optical device structures disposed on a first substrate. The optical device further includes a second metasurface coupled to the second plurality of gratings. The second metasurface includes a second plurality of optical device structures disposed on a second substrate.

In yet another embodiment, an optical device is provided. The optical device includes a waveguide combiner. The waveguide combiner includes a first plurality of gratings disposed on a first surface of a substrate and a second plurality of gratings disposed on a second surface of the substrate. The optical device further includes a convex lens coupled to the first plurality of gratings with a first pair of spacers and a concave lens coupled to the second plurality of gratings with a second pair of spacers.

BRIEF DESCRIPTION OF THE DRAWINGS

So that the manner in which the above recited features of the present disclosure can be understood in detail, a more particular description of the disclosure, briefly summarized above, may be had by reference to embodiments, some of which are illustrated in the appended drawings. It is to be noted, however, that the appended drawings illustrate only exemplary embodiments and are therefore not to be considered limiting of its scope, and may admit to other equally effective embodiments.

FIG. **1** is a schematic, frontal view of glasses according to embodiments.

FIGS. **2**A-**2**E are schematic, cross-sectional views of a lens stack according to embodiments.

To facilitate understanding, identical reference numerals have been used, where possible, to designate identical elements that are common to the figures. It is contemplated that elements and features of one embodiment may be beneficially incorporated in other embodiments without further recitation.

DETAILED DESCRIPTION

Embodiments of the present disclosure generally relate to optical devices. More specifically, embodiments described herein relate to augmented reality and virtual reality glasses having stacked lenses. In one embodiment, an optical device is provided. The optical device includes a first waveguide combiner. The first waveguide combiner includes a first plurality of gratings disposed on a first surface of a substrate and a second plurality of gratings disposed on a second surface of the substrate. The optical device includes a first encapsulation layer disposed on the first plurality of gratings and a second encapsulation layer disposed on the second plurality of gratings. The optical device further includes a first metasurface coupled to the first encapsulation layer. The first metasurface includes a first plurality of optical device structures. The optical device further includes a second metasurface coupled to the second encapsulation layer. The second metasurface includes a second plurality of optical device structures.

FIG. **1** is a schematic, frontal view of glasses **100**. The glasses **100** are operable to be virtual reality (VR) or augmented reality (AR) glasses. The glasses **100** include a frame **102**. The frame **102** retains a pair of optical device lenses **104**. Each lens of the pair of optical device lenses **104** includes an image incoupler **106** and an image outcoupler **108**. In one embodiment, which can be combined with other embodiments described herein, the image incoupler **106** and the image outcoupler **108** are arranged so as to achieve substantially total internal reflection of light between the image incoupler **106** and the image outcoupler **108**. In another embodiment, which can be combined with other embodiments described herein, each lens of the pair of optical device lenses **104** includes one of a lens stack **200**A-**200**E (shown in FIGS. **2**A-**2**E). The lens stacks **200**A-**200**E include multiple lenses (shown in FIGS. **2**A-**2**E) that are physically coupled together such that the pair of optical device lenses **104** may be retained by the frame **102**. Although FIG. **1** shows the pair of optical device lenses **104** retained by the frame **102**, the pair of optical device lenses **104** are not limited to the frame **102**. For example, other means for retaining the pair of optical device lenses **104** may be utilized, such as with alternate frame shapes, other devices such as a head-mounted display (HMD) or other wearable display devices that have near-eye display panels as lenses, to display a virtual or augmented reality environment.

FIGS. **2**A-**2**E are schematic, cross-sectional views of lens stacks **200**A-**200**E. The pair of optical device lenses **104** (shown in FIG. **1**) each include one of the lens stacks **200**A-**200**E. The lens stacks **200**A-**200**E are retained by the frame **102** (shown in FIG. **1**). The lens stacks **200**A-**200**E reduce the total weight of the pair of the optical device lenses **104** (shown in FIG. **1**). For example, the usage of metasurfaces will significantly reduce the weight of the optical device lenses compared to bulk lens usage. Additionally, integrating the prescription lenses into the optical device lenses **104** will improve the functionality of the glasses **100**. Users who need prescription lenses will be able to use the glasses **100** more comfortably and functionally. The stacking of lenses will be aligned as needed during manufacturing. As such, post alignment processes to align the multiple lenses will not be required. Therefore, a decrease in manufacturing time and cost will be achieved.

FIG. **2**A is a schematic, cross-sectional view of a lens stack **200**A. The lens stack **200**A includes a waveguide combiner **202**, a convex lens **210**, and a concave lens **214**. The waveguide combiner **202** assists in overlaying virtual images on ambient environments. The waveguide combiner **202** includes a waveguide substrate **204** and one or more gratings **206** (i.e., first grating **206***a* and second grating **206***b*). The lens stack **200**A is operable to be sensitive to one or more wavelengths corresponding to at least one of red, green, or blue light. Substrate selection may include substrates of any suitable material, including, but not limited to, amorphous dielectrics, non-amorphous dielectrics, crystalline dielectrics, silicon oxide, polymers, or combinations thereof. In some embodiments, which may be combined with other embodiments described herein, the waveguide substrate **204** includes a transparent material. Suitable examples may include an oxide, sulfide, phosphide, telluride or combinations thereof. In one example, the waveguide substrate **204** includes silicon (Si), silicon dioxide (SiO_2), fused silica, quartz, silicon carbide (SiC), germanium (Ge), silicon germanium (SiGe), indium phosphide (InP), gallium arsenide (GaAs), gallium nitride (GaN), or sapphire, and high-index transparent materials such as high-refractive-index glass, or combinations thereof.

One or more of the first gratings **206***a* are disposed on a first surface **208** of the waveguide substrate **204**. One or more of the second gratings **206***b* are disposed on a second surface **209** of the waveguide substrate **204**. In one embodiment, which can be combined with other embodiments described herein, each of the one or more gratings **206**, such as the first gratings **206***a* and the second gratings **206***b*, correspond to one of the image incoupler **106**, the image outcoupler **108**, or an intermediate grating (not shown). The lens stack **200**A includes the image incoupler **106** and the image outcoupler **108**.

The one or more gratings **206** are each a region of optical device structures **201**. The plurality of optical device structures **201** are nanostructures having sub-micron dimensions. Although the optical device structures **201** shown are binary, the optical device structures **201** may be angled relative to the first surface **208** of the waveguide substrate **204** and the second surface **209**. For example, the optical device structures **201** may be at an angle from 15° to about 85°. The optical device structures **201** may vary in height **203** along the waveguide substrate **204**. The optical device structures **201** include, but are not limited to, one or more of silicon oxycarbide (SiOC), titanium dioxide (TiO_2), silicon dioxide (SiO_2), vanadium (IV) oxide (VOx), aluminum oxide (Al_2O_3), aluminum-doped zinc oxide (AZO), indium tin oxide (ITO), tin dioxide (SnO_2), zinc oxide (ZnO), tantalum pentoxide (Ta_2O_5), silicon nitride (Si_3N_4), zirconium dioxide (ZrO_2), niobium oxide (Nb_2O_5), cadmium stannate (Cd_2SnO_4), silicon carbon-nitride (SiCN) containing materials, or combinations thereof.

The convex lens **210** is coupled to the first gratings **206***a*. The convex lens **210** is coupled to the first gratings **206***a* via a first pair of spacers **212***a*. The convex lens **210** allows for a real image to be focused in a user's retina. The lens stack **200***a* further includes the concave lens **214**. The concave lens **214** is coupled to the second gratings **206***b*. The concave lens **214** is coupled to the second gratings **206***b* via a second pair of spacers **212***b*. The concave lens **214** is utilized to bring the virtual images nearer to the user's retina. For example, the concave lens **214** brings the virtual images between about 0.2 m to about 3 m of the user's retina. In one embodiment, which can be combined with other embodiments described herein, the lens stack **200**A includes a prescription lens **216**. The prescription lens **216** is coupled to the concave lens **214**. The prescription lens **216** is coupled to the concave lens **214** via a third pair of spacers **212***c*. The prescription lens **216** may be optionally included in the lens stack **200**A, depending if the user requires the prescription lens **216**. In one embodiment, which can be combined with other embodiments described herein, the first pair of spacers **212***a*, the second pair of spacers **212***b*, and the third pair of spacers **212***c* include a polystyrene material. In some embodiments, which can be combined with other embodiments described herein, the first pair of spacers **212***a*, the second pair of spacers **212***b*, and the third pair of spacers **212***c* are an adhesive material.

FIG. **2**B is a schematic, cross-sectional view of a lens stack **200**B. The lens stack **200**B includes a waveguide combiner **202**, a first metasurface **218***a*, and a second metasurface **218***b*. The waveguide combiner **202** includes a waveguide substrate **204** and one or more gratings **206** (i.e., first grating **206***a* and second grating **206***b*). The lens stack **200**B is operable to be sensitive to one or more wavelengths corresponding to at least one of red, green, or blue light. One or more first gratings **206***a* are disposed on a first surface **208**

of the waveguide substrate **204**. One or more second gratings **206***b* are disposed on a second surface **209** of the waveguide substrate **204**. The lens stack **200**A includes the image incoupler **106** and the image outcoupler **108**.

The first metasurface **218***a* is coupled to the first gratings **206***a*. The first metasurface **218***a* allows for a real image to be focused in a user's retina. The lens stack **200**B further includes a second metasurface **218***b*. The second metasurface **218***b* is coupled to the second gratings **206***b*. The second metasurface **218***b* is utilized to bring the virtual images nearer to the user's retina. For example, the second metasurface **218***b* brings the virtual images between about 0.2 m to about 3 m of the user's retina. In one embodiment, which can be combined with other embodiments described herein, the lens stack **200**B includes a third metasurface **218***c*. The third metasurface **218***c* is a prescription lens or prescription metasurface. The third metasurface **218***c* is coupled to the second metasurface **218***b*. The third metasurface **218***c* may be optionally included in the lens stack **200**B, depending if the user needs a prescription lens or prescription metasurface.

The first metasurface **218***a*, the second metasurface **218***b*, and the third metasurface **218***c* are flat optical devices; therefore, the first metasurface **218***a*, the second metasurface **218***b*, and the third metasurface **218***c* have a thickness less than the thickness of the concave lens **214**, the convex lens **210**, and the prescription lens **216** of the lens stack **200**A.

In one embodiment, which can be combined with other embodiments described herein, a curing process couples the metasurfaces **218***a*-**218***c* and the waveguide combiner **202** of the lens stack **200**B together. For example, an ultraviolet (UV) light sensitive glue may be used to couple the metasurfaces **218***a*-**218***c* and waveguide combiner **202** of the lens stack **200**B together during the curing process.

The first metasurface **218***a* includes a first substrate **220***a*. The first substrate **220***a* is coupled to the first gratings **206***a*. The first metasurface **218***a* further includes a first plurality of optical device structures **222***a* disposed on the first substrate **220***a*. The second metasurface **218***b* includes a second substrate **220***b*. The second substrate **220***b* is coupled to the second gratings **206***b*. The second metasurface **218***b* further includes a second plurality of optical device structures **222***b* disposed on the second substrate **220***b*. The third metasurface **218***c* includes a third substrate **220***c*. The third substrate **220***c* is coupled to the second plurality of optical device structures **222***b*. The third metasurface **218***c* further includes a third plurality of optical device structures **222***c* disposed on the third substrate **220***c*.

Substrate selection of the first substrate **220***a*, the second substrate **220***b*, and the third substrate **220***c* may include substrates of any suitable material, including, but not limited to, amorphous dielectrics, non-amorphous dielectrics, crystalline dielectrics, silicon oxide, polymers, or combinations thereof. In some embodiments, which may be combined with other embodiments described herein, the first substrate **220***a*, the second substrate **220***b*, and the third substrate **220***c* include a transparent material. Suitable examples may include an oxide, sulfide, phosphide, telluride or combinations thereof. In one example, the first substrate **220***a*, the second substrate **220***b*, and the third substrate **220***c* include silicon (Si), silicon dioxide (SiO_2), fused silica, quartz, silicon carbide (SiC), germanium (Ge), silicon germanium (SiGe), indium phosphide (InP), gallium arsenide (GaAs), gallium nitride (GaN), or sapphire, and high-index transparent materials such as high-refractive-index glass, or combinations thereof. Each of the first substrate **220***a*, the second substrate **220***b*, and the third substrate **220***c* may include a different material. The first plurality of optical device structures **222***a*, the second plurality of optical device structures **222***b*, and the third plurality of optical device structures **222***c* include, but are not limited to, one or more of silicon oxycarbide (SiOC), titanium dioxide (TiO_2), silicon dioxide (SiO_2), vanadium (IV) oxide (VOx), aluminum oxide (Al_2O_3), aluminum-doped zinc oxide (AZO), indium tin oxide (ITO), tin dioxide (SnO_2), zinc oxide (ZnO), tantalum pentoxide (Ta_2O_5), silicon nitride (Si_3N_4), zirconium dioxide (ZrO_2), niobium oxide (Nb_2O_5), cadmium stannate (Cd_2SnO_4), silicon carbon-nitride (SiCN) containing materials, or combinations thereof. Each of the first plurality of optical device structures **222***a*, the second plurality of optical device structures **222***b*, and the third plurality of optical device structures **222***c* may include different materials.

Although the first plurality of optical device structures **222***a*, the second plurality of optical device structures **222***b*, and the third plurality of optical device structures **222***c* shown are binary, the optical device structures may be angled. For example, the first plurality of optical device structures **222***a*, the second plurality of optical device structures **222***b*, and the third plurality of optical device structures **222***c* may be at an angle from 15° to about 85°. The first plurality of optical device structures **222***a*, the second plurality of optical device structures **222***b*, and the third plurality of optical device structures **222***c* may vary in a height **205** along the first substrate **220***a*, the second substrate **220***b*, and the third substrate **220***c*.

FIG. **2**C is a schematic, cross-sectional view of a lens stack **200**C. The lens stack **200**C is a variation of the lens stack **200**B. The lens stack **200**C includes the waveguide combiner **202**. The waveguide combiner **202** includes the waveguide substrate **204** and the one or more gratings **206**. A first encapsulation layer **224***a* is disposed over the first gratings **206***a*. A second encapsulation layer **224***b* is disposed over the second gratings **206***b*. The first encapsulation layer **224***a* and the second encapsulation layer **224***b* provide protection for the waveguide combiner **202**.

The lens stack **200**C includes the first metasurface **218***a*. The first metasurface **218***a* is coupled to the first encapsulation layer **224***a*. The lens stack **200**C further includes the second metasurface **218***b*. The second metasurface **218***b* is coupled to the second encapsulation layer **224***b*. In one embodiment, which can be combined with other embodiments described herein, the lens stack **200**C includes the third metasurface **218***c*. The third metasurface **218***c* is a prescription lens or metasurface. The third metasurface **218***c* is coupled to the second metasurface **218***b*. The third metasurface **218***c* may be optionally included in the lens stack **200**C, depending if the user requires a prescription lens or prescription metasurface. In one embodiment, which can be combined with other embodiments described herein, a curing process couples the metasurfaces **218***a*-**218***c* and the waveguide combiner **202** of the lens stack **200**C together. For example, an ultraviolet (UV) light sensitive glue may be used to couple the metasurfaces **218***a*-**218***c* and waveguide combiner **202** of the lens stack **200**C together during a curing process.

The first metasurface **218***a* includes a first plurality of optical device structures **222***a* disposed on the first encapsulation layer **224***a*. The second metasurface **218***b* includes a second plurality of optical device structures **222***b* disposed on the second encapsulation layer **224***b*. In embodiments where the third metasurface **218***c* is employed, the second metasurface **218***b* may include a third encapsulation layer **224***c*. The third encapsulation layer **224***c* is disposed over the second plurality of optical device structures **222***b*. The

third metasurface **218***c* includes a third plurality of optical device structures **222***c* disposed on the third encapsulation layer **224***c*.

The first encapsulation layer **224***a*, the second encapsulation layer **224***b*, and the third encapsulation layer **224***c* include SiN, low-k, SiOC, SiCONH, SiO, PSG, BPSG, TaO or TiN materials, or combinations thereof. The first encapsulation layer **224***a*, the second encapsulation layer **224***b*, and the third encapsulation layer **224***c* provide mechanical support for the plurality of optical device structures **222***a*-**222***c* disposed thereon. The first encapsulation layer **224***a*, the second encapsulation layer **224***b*, and the third encapsulation layer **224***c* allow for improved manufacture time and cost compared to utilizing substrates for the metasurfaces.

FIG. **2**D is a schematic, cross-sectional view of a lens stack **200**D. The lens stack **200**D includes multiple lens stacks **200**C coupled together. For example, lens stack **200**C with a first waveguide combiner **202***a* is coupled to a separate lens stack **200**C with a second waveguide combiner **202***b* which is coupled to a separate lens stack **200**C with a third waveguide combiner **202***c*. The first waveguide combiner **202***a*, the second waveguide combiner **202***b*, and the third waveguide combiner **202***c* are to be sensitive to one or more wavelengths corresponding to at least one of red, green, or blue light. For example, the first waveguide combiner **202***a* is sensitive to red light, the second waveguide combiner **202***b* is sensitive to green light, and the third waveguide combiner **202***c* is sensitive to blue light. Therefore, the lens stack **200**D is operable to be sensitive to wavelengths corresponding to red, green, and blue light.

In one embodiment, which can be combined with other embodiments described herein, the lens stacks **200**C are coupled together such that a first metasurface **218***a* of the lens stack **200**C is coupled to a third metasurface **218***c* of an adjacent lens stack **200**C. In another embodiment, which can be combined with other embodiments described herein, where prescription lenses or metasurfaces are not required, the third metasurface **218***c* of the lens stack **200**C is removed such that adjacent lens stacks **200**C are coupled together with the first metasurface **218***a* of the lens stack **200**C coupled to a second metasurface **218***b* of an adjacent lens stack **200**C.

FIG. **2**E is a schematic, cross-sectional view of a lens stack **200**E. The lens stack **200**E includes a first waveguide combiner **202***a*, a second waveguide combiner **202***b*, and a third waveguide combiner **202***c*. The first waveguide combiner **202***a*, the second waveguide combiner **202***b*, and the third waveguide combiner **202***c* assist in overlaying virtual images on ambient environments. The first waveguide combiner **202***a*, the second waveguide combiner **202***b*, and the third waveguide combiner **202***c* are operable to be sensitive to one or more wavelengths corresponding to at least one of red, green, or blue light. For example, the first waveguide combiner **202***a* is sensitive to red light, the second waveguide combiner **202***b* is sensitive to green light, and the third waveguide combiner **202***c* is sensitive to blue light. Therefore, the lens stack **200**E is operable to be sensitive to wavelengths corresponding to red, green, and blue light.

The first waveguide combiner **202***a* includes a first waveguide substrate **204***a*. The second waveguide combiner **202***b* includes a second waveguide substrate **204***b*. The third waveguide combiner **202***c* includes a third waveguide substrate **204***c*. The first waveguide substrate **204***a* includes one or more first gratings **206***a* on a first surface **208**. The first waveguide substrate **204***a* includes one or more second gratings **206***b* on a second surface **209**. The second waveguide substrate **204***b* includes the first gratings **206***a* on the first surface **208**. The second waveguide substrate **204***b* includes the second gratings **206***b* on the second surface **209**. The third waveguide substrate **204***c* includes the first gratings **206***a* on the first surface **208**. The third waveguide substrate **204***c* includes the second gratings **206***b* on the second surface **209**.

The first gratings **206***a* include a first encapsulation layer **224***a* disposed thereover. The second gratings **206***b* include a second encapsulation layer **224***b* disposed thereover. The first encapsulation layers **224***a* and the second encapsulation layers **224***b* provide protection for the first waveguide combiner **202***a*, the second waveguide combiner **202***b*, and the third waveguide combiner **202***c*.

The lens stack **200**E includes a first metasurface **218***a*. The first metasurface **218***a* is coupled to the first encapsulation layer **224***a* of the first waveguide combiner **202***a*. The first metasurface **218***a* allows for a real image to be focused in a user's retina. The lens stack **200**E further includes a second metasurface **218***b*. The second metasurface **218***b* is coupled to the second encapsulation layer **224***b* of the third waveguide combiner **202***c*. The second metasurface **218***b* is utilized to bring the virtual images nearer to the user's retina. For example, the second metasurface **218***b* brings the virtual images between about 0.2 m to about 3 m of the user's retina. In one embodiment, which can be combined with other embodiments described herein, the lens stack **200**E includes a third metasurface **218***c*. The third metasurface **218***c* is a prescription lens or metasurface. The third metasurface **218***c* is coupled to the second metasurface **218***b*. The third metasurface **218***c* may be optionally included in the lens stack **200**E, depending if the user requires a prescription lens or prescription metasurface. The first metasurface **218***a*, the second metasurface **218***b*, and the third metasurface **218***c* are flat optical devices; therefore, the first metasurface **218***a*, the second metasurface **218***b*, and the third metasurface **218***c* have a metasurface thickness **213** less than a lens thickness **211** of the concave lens **214**, the convex lens **210**, and the prescription lens **216** of the lens stack **200**A. In one embodiment, which can be combined with other embodiments described herein, a curing process couples the metasurfaces **218***a*-**218***c* and the waveguide combiners **202***a*-**202***c* of the lens stack **200**E together. For example, an ultraviolet (UV) light sensitive glue may be used to couple the metasurfaces **218***a*-**218***c* and waveguide combiners **202***a*-**202***c* of the lens stack **200**E together during a curing process.

The first metasurface **218***a* includes a first plurality of optical device structures **222***a* disposed on the first encapsulation layer **224***a*. The second metasurface **218***b* includes a second plurality of optical device structures **222***b* disposed on the second encapsulation layer **224***b*. In embodiments where the third metasurface **218***c* is required, the second metasurface **218***b* may include a third encapsulation layer **224***c*. The third encapsulation layer **224***c* is disposed over the second plurality of optical device structures **222***b*. The third metasurface **218***c* includes a third plurality of optical device structures **222***c* disposed on the third encapsulation layer **224***c*. The first encapsulation layer **224***a*, the second encapsulation layer **224***b*, and the third encapsulation layer **224***c* provide mechanical support for the plurality of optical device structures **222***a*-**222***c* disposed thereon. The first encapsulation layer **224***a*, the second encapsulation layer **224***b*, and the third encapsulation layer **224***c* in place of the first substrate **220***a*, the second substrate **220***b*, and the third substrate **220***c* of FIG. **2**B allows for improved manufacture time and cost.

In summation, augmented reality and virtual reality glasses having stacked lenses are described herein. The augmented reality (AR) and virtual reality (VR) glasses include a pair of lenses retained by a frame. In order to decrease the weight of traditional AR/VR glasses, a lens stack may be utilized in the pair of lenses. In addition to a waveguide combiner, used to assist in overlaying virtual images on ambient environments, the lens stack may include multiple metasurfaces that improve the focus adjustment for both the real and virtual images as well as the option to include a prescription lens or prescription metasurface in the lens stack. By utilizing a lens stack, the total weight of the glasses will decrease. Additionally, removal of a post alignment process to align the multiple lenses will decrease manufacturing time and cost.

While the foregoing is directed to examples of the present disclosure, other and further examples of the disclosure may be devised without departing from the basic scope thereof, and the scope thereof is determined by the claims that follow.

What is claimed is:

1. An optical device comprising:

a waveguide combiner, the waveguide combiner including:

one or more first gratings disposed on a first surface of a substrate; and

one or more second gratings disposed on a second surface of the substrate;

a convex lens coupled to the one or more first gratings with a first pair of spacers;

a concave lens coupled to the one or more second gratings with a second pair of spacers; and

a prescription lens coupled to the concave lens with a third pair of spacers.

2. The optical device of claim **1**, wherein the one or more first gratings and the one or more second gratings include a plurality of optical device structures.

3. The optical device of claim **2**, wherein the plurality of optical device structures are nanostructures having submicron dimensions.

4. The optical device of claim **2**, wherein the plurality of optical device structures are binary or angled relative to the first surface of the substrate and the second surface of the substrate.

5. The optical device of claim **4**, wherein the plurality of optical device structures comprise an angle of 15 degrees to 85 degrees.

6. The optical device of claim **2**, wherein the optical device structures comprise silicon oxycarbide (SiOC), titanium dioxide (TiO_2), silicon dioxide (SiO_2), vanadium (IV) oxide (VOx), aluminum oxide (Al_2O_3), aluminum-doped zinc oxide (AZO), indium tin oxide (ITO), tin dioxide (SnO_2), zinc oxide (ZnO), tantalum pentoxide (Ta_2O_5), silicon nitride (Si_3N_4), zirconium dioxide (ZrO_2), niobium oxide (Nb_2O_5), cadmium stannate (Cd_2SnO_4), silicon carbon-nitride (SiCN) containing materials, or combinations thereof.

7. The optical device of claim **1**, wherein:

the one or more first gratings include a first image incoupler and a first image outcoupler; and

the one or more second gratings include a second image incoupler and a second image outcoupler.

8. The optical device of claim **1**, wherein the first pair of spacers and the second pair of spacers include a polystyrene material or an adhesive material.

9. The optical device of claim **1**, wherein the substrate comprises silicon (Si), silicon dioxide (SiO_2), fused silica, quartz, silicon carbide (SiC), germanium (Ge), silicon germanium (SiGe), indium phosphide (InP), gallium arsenide (GaAs), gallium nitride (GaN), or sapphire or combinations thereof.

10. The optical device of claim **1**, wherein the convex lens is operable to focus a real image on a user's retina.

11. The optical device of claim **1**, wherein the concave lens is operable to bring a virtual image nearer to a user's retina.

12. The optical device of claim **11**, wherein the concave lens is operable to bring the virtual image about 0.2 m to about 3 m of the user's retina.

13. An optical device comprising:

a waveguide combiner, the waveguide combiner comprising:

an image incoupler comprising a plurality of optical device structures and an image outcoupler comprising the plurality of optical device structures disposed over a first surface of a substrate; and

a convex lens coupled to the waveguide combiner with a first pair of spacers disposed over the first surface; and

a concave lens coupled to the waveguide combiner with a second pair of spacers disposed over a second surface of the substrate; and a prescription lens coupled to the concave lens with a third pair of spacers.

14. The optical device of claim **13**, wherein the plurality of optical device structures comprise silicon oxycarbide (SiOC), titanium dioxide (TiO_2), silicon dioxide (SiO_2), vanadium (IV) oxide (VOx), aluminum oxide (Al_2O_3), aluminum-doped zinc oxide (AZO), indium tin oxide (ITO), tin dioxide (SnO_2), zinc oxide (ZnO), tantalum pentoxide (Ta_2O_5), silicon nitride (Si_3N_4), zirconium dioxide (ZrO_2), niobium oxide (Nb_2O_5), cadmium stannate (Cd_2SnO_4), silicon carbon-nitride (SiCN) containing materials, or combinations thereof.

15. The optical device of claim **13**, wherein the plurality of optical device structures are binary or angled relative to the first surface of the substrate and the second surface of the substrate.

16. The optical device of claim **15**, wherein the plurality of optical device structures comprise an angle of 15 degrees to 85 degrees.

17. An optical device comprising:

a waveguide combiner, the waveguide combiner including:

an image incoupler comprising a plurality of optical device structures and an image outcoupler comprising the plurality of optical device structures disposed over a first surface of a substrate; and

a convex lens coupled to the waveguide combiner with a first pair of spacers disposed over the first surface; and

a concave lens coupled to the waveguide combiner with a second pair of spacers disposed over a second surface of the substrate; and

a prescription lens coupled to the concave lens with a third pair of spacers.

18. The optical device of claim **17**, wherein the substrate comprises silicon (Si), silicon dioxide (SiO_2), fused silica, quartz, silicon carbide (SiC), germanium (Ge), silicon germanium (SiGe), indium phosphide (InP), gallium arsenide (GaAs), gallium nitride (GaN), or sapphire or combinations thereof.

19. The optical device of claim **17**, wherein the first pair of spacers and the second pair of spacers include a polystyrene material or an adhesive material.

* * * * *