US012710337B2

(12) **United States Patent**
Sun et al.

(10) **Patent No.: US 12,710,337 B2**
(45) **Date of Patent: *Aug. 18, 2026**

(54) **ILLUMINATION SYSTEM FOR AR METROLOGY TOOL**

(71) Applicant: **Applied Materials, Inc.**, Santa Clara, CA (US)

(72) Inventors: **Yangyang Sun**, San Jose, CA (US); **Jinxin Fu**, Fremont, CA (US); **Kazuya Daito**, Milpitas, CA (US); **Ludovic Godet**, Sunnyvale, CA (US)

(73) Assignee: **Applied Materials, Inc.**, Santa Clara, CA (US)

(*) Notice: Subject to any disclaimer, the term of this patent is extended or adjusted under 35 U.S.C. 154(b) by 0 days.

This patent is subject to a terminal disclaimer.

(21) Appl. No.: **18/667,513**

(22) Filed: **May 17, 2024**

(65) **Prior Publication Data**

US 2024/0385075 A1 Nov. 21, 2024

Related U.S. Application Data

(63) Continuation of application No. 17/456,240, filed on Nov. 23, 2021, now Pat. No. 11,988,574.
(Continued)

(51) **Int. Cl.**
G01M 11/02 (2006.01)
G02B 19/00 (2006.01)
(Continued)

(52) **U.S. Cl.**
CPC ***G01M 11/0264*** (2013.01); ***G02B 19/0047*** (2013.01); ***G02B 27/30*** (2013.01);
(Continued)

(58) **Field of Classification Search**
CPC G01M 11/0264; G02B 19/0047; G02B 27/30; G02B 27/0081; G02B 27/62;
(Continued)

(56) **References Cited**

U.S. PATENT DOCUMENTS

7,457,040 B2 11/2008 Amitai
7,573,019 B2 8/2009 Koyama
(Continued)

FOREIGN PATENT DOCUMENTS

CN 111033326 A 4/2020
JP H09068705 A 3/1997
(Continued)

OTHER PUBLICATIONS

Extended European Search Report for European Application 21899034.9 dated Sep. 17, 2024.
(Continued)

Primary Examiner — Nasim N Nirjhar
(74) *Attorney, Agent, or Firm* — Patterson + Sheridan, LLP

(57) **ABSTRACT**

Embodiments described herein provide for light engines of a measurement system and methods of using the light engines. The measurement system includes a light engine operable to illuminate a first grating of an optical device. The light engine projects a pattern with a light from a light engine. The light engine projects a pattern to the first grating such that a metrology metric may be extracted from one or more images captured by a detector of the measurement system. The metrology metrics are extracted by processing the image. The metrology metrics determine if the optical device meets image quality standards.

19 Claims, 6 Drawing Sheets

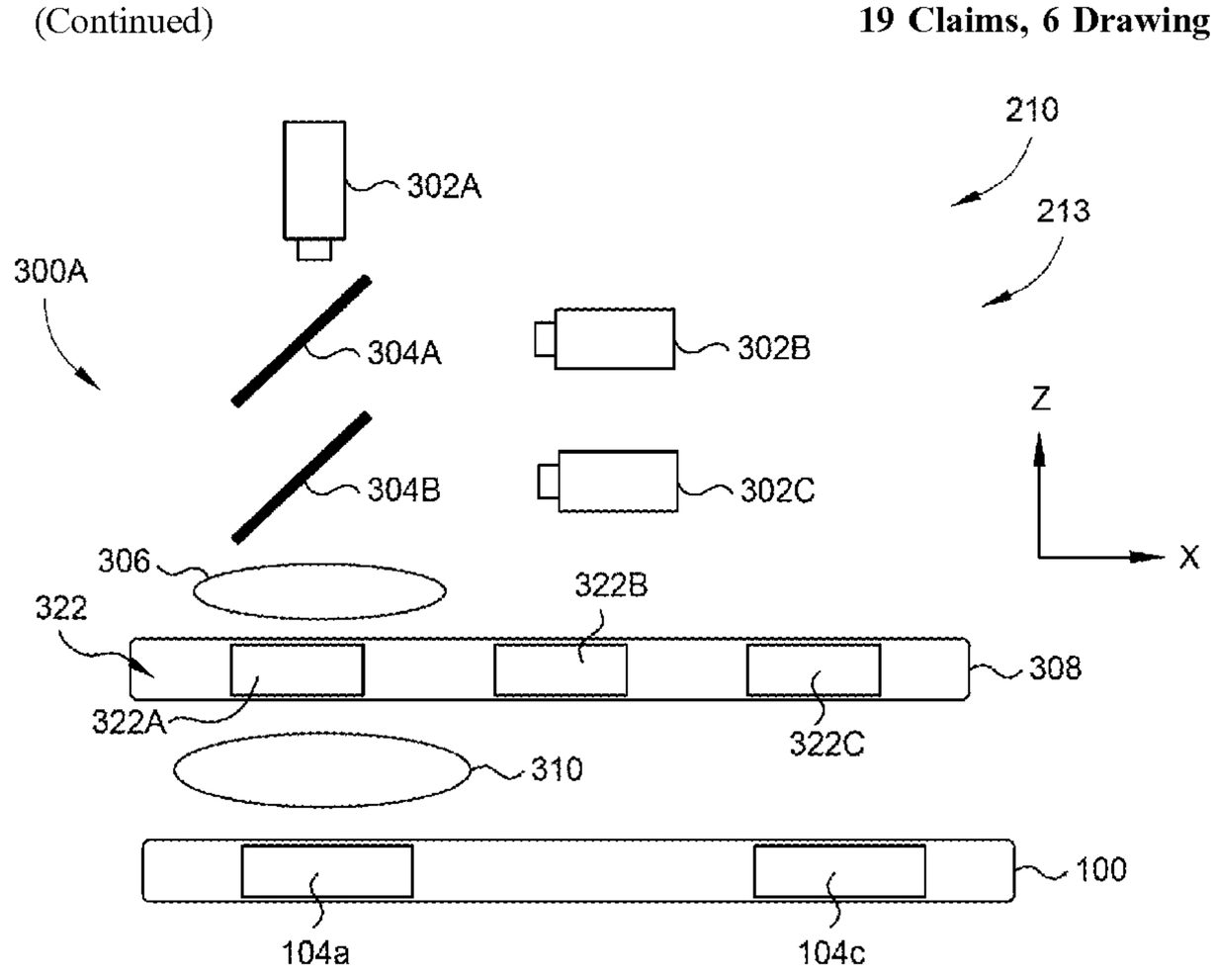

Related U.S. Application Data

(60) Provisional application No. 63/184,398, filed on May 5, 2021, provisional application No. 63/117,576, filed on Nov. 24, 2020.

(51) **Int. Cl.**

G02B 27/30	(2006.01)
G06T 7/00	(2017.01)
H04N 23/56	(2023.01)

(52) **U.S. Cl.**

CPC ***G06T 7/0002*** (2013.01); ***H04N 23/56*** (2023.01); *G06T 2207/10152* (2013.01); *G06T 2207/30168* (2013.01); *G06T 2207/30204* (2013.01)

(58) **Field of Classification Search**

CPC G02B 27/0172; G02B 2027/011; G06T 7/0002; G06T 2207/10152; G06T 2207/30168; G06T 2207/30204; H04N 23/56

See application file for complete search history.

(56) **References Cited**

U.S. PATENT DOCUMENTS

7,576,916	B2	8/2009	Amitai	
7,710,655	B2	5/2010	Freeman et al.	
7,724,441	B2	5/2010	Amitai	
7,736,006	B2	6/2010	Freeman et al.	
7,905,603	B2	3/2011	Freeman et al.	
7,959,308	B2	6/2011	Freeman et al.	
8,004,765	B2	8/2011	Amitai	
9,189,705	B2	11/2015	Jeong	
9,671,603	B2	6/2017	Kalkbrenner et al.	
9,720,236	B2	8/2017	Yokoyama	
9,752,932	B2	9/2017	Fontecchio et al.	
11,022,798	B2	6/2021	Yeoh et al.	
11,073,693	B2	7/2021	Akutsu et al.	
11,131,629	B2	9/2021	Sezginer et al.	
11,656,390	B2	5/2023	Park et al.	
11,852,841	B2	12/2023	Yeoh et al.	
12,092,836	B2	9/2024	Sales	
2003/0048436	A1	3/2003	Kitabayashi et al.	
2005/0057495	A1	3/2005	Parker et al.	
2005/0180687	A1	8/2005	Amitai	
2006/0109482	A1	5/2006	Duval et al.	
2007/0159673	A1	7/2007	Freeman et al.	
2007/0171328	A1	7/2007	Freeman et al.	
2007/0171329	A1	7/2007	Freeman et al.	
2008/0158685	A1	7/2008	Amitai	
2008/0239290	A1	10/2008	Watanabe et al.	
2009/0052046	A1	2/2009	Amitai	
2009/0097127	A1	4/2009	Amitai	
2010/0056928	A1*	3/2010	Zuzak	G01J 3/2823 356/302
2010/0201953	A1	8/2010	Freeman et al.	
2010/0202034	A1	8/2010	Freeman et al.	
2012/0015460	A1	1/2012	Donaher	
2014/0146166	A1	5/2014	Shin	
2015/0043803	A1	2/2015	Jeong	
2015/0260994	A1	9/2015	Akutsu et al.	
2015/0301325	A1*	10/2015	Kalkbrenner	G02B 21/0092 359/385
2016/0124229	A1	5/2016	Yokoyama	
2018/0012914	A1	1/2018	Seo et al.	
2018/0275390	A1	9/2018	Harsila	
2018/0340886	A1	11/2018	Sezginer et al.	
2018/0364487	A1	12/2018	Yeoh et al.	
2019/0121027	A1	4/2019	Popovich et al.	
2020/0133012	A1	4/2020	Sales	
2020/0141802	A1	5/2020	Fu et al.	
2020/0209104	A1*	7/2020	Sogard	G01M 11/02
2020/0249589	A1*	8/2020	Maeda	G03F 9/7046
2020/0264522	A1	8/2020	De Winter et al.	
2020/0271836	A1	8/2020	Park	
2020/0333534	A1	10/2020	Cotton	
2021/0063900	A1	3/2021	Ni et al.	
2021/0185632	A1	6/2021	Manolakos et al.	
2021/0333555	A1	10/2021	Yeoh et al.	
2022/0335649	A1	10/2022	Nayak et al.	
2024/0077741	A1	3/2024	Yeoh et al.	
2025/0004286	A1	1/2025	Sales	

FOREIGN PATENT DOCUMENTS

JP	H11133309	A	5/1999
JP	2001274941	A	10/2001
JP	2003274087	A	9/2003
JP	2005256671	A	9/2005
JP	2008298932	A	12/2008
JP	2009516862	A	4/2009
JP	2010164988	A	7/2010
JP	2015175967	A	10/2015
JP	2015529347	A	10/2015
JP	2016085426	A	5/2016
JP	2020067664	A	4/2020
KR	2007-0026797	A	3/2007
TW	200510690	A	3/2005
TW	201514468	A	4/2015
TW	I525315	B	3/2016
TW	201907228	A	2/2019
WO	03081320	A1	10/2003
WO	2005124831	A1	12/2005
WO	2007062098	A2	5/2007
WO	2012009197	A2	1/2012
WO	2014040799	A1	3/2014
WO	2018/236725	A1	12/2018

OTHER PUBLICATIONS

Moderator (Intel Corporation), "Summary of the RAN1 Wg e-mail discussion [100b-e-NR-Pos-01]", vol. RAN WG1, No. e-Meeting; Apr. 20, 2020-Apr. 30, 2020, May 1, 2020; Retrieved from the Internet: URL:https://ftp.3gpp.org/ tsg_ran/WG1_RL1/TSGR1_100b_e/Docs/R1-2002770.zip R1-2002770_[100b-e-NR-Pos-01].docx.

"3 Generation Partnership Project; Technical Specification Group Radio Access Network; LTE Positioning Protocol (LPP) (Release 16)", No. V16.1.0, Jul. 24, 2020 (Jul. 24, 2020), p. 1-292; Retrieved from the Internet: URL:ftp://ftp.3gpp.org/Specs/archive/37_series/37.355/37355-g10.zip 37355-g10.docx.

Intel Corporation, "Output of email thread [100e-NR-Pos-DL-PRS-02]", vol. RAN WG1, No. e-Meeting; Feb. 24, 2020-Mar. 6, 2020, Mar. 5, 2020; Retrieved from the Internet: URL:https://ftp.3gpp.org/tsg_ran/WG1_RL1/ TSGR1_100_e/Docs/R1-2001235.zip R1-2001235.docx.

ZTE, "Discussions on potential NR positioning enhancements", vol. RAN WG1, No. e-Meeting; Aug. 17, 2020-Aug. 28, 2020, Aug. 8, 2020; Retrieved from the Internet: URL:https://ftp.3gpp.org/tsg_ran/WG1_RL1/TSGR1_102-e/Docs/R1-2005464.zip R1-2005464 Discussion on potential NR positioning enhancements.docx.

Qualcomm Incorporated, "Initial thoughts on Potential Positioning Enhancements", vol. RAN WG1, No. e-meeting; May 25, 2020-Jun. 5, 2020, May 16, 2020; Retrieved from the Internet: URL:https://ftp.3gpp.org/tsg_ran/WG1_RL1/TSGR1_101-e/Docs/R1-2004492.zip R1-2004492.docx.

Moderator (Catt), "FL Summary #2 for Potential Positioning Enhancements", vol. RAN WG1, No. e-meeting; May 25, 2020-Jun. 5, 2020, Aug. 22, 2020; Retrieved from the Internet: URL:https://ftp.3gpp.org/tsg_ran/WG1_RL1/ TSGR1_102-e/Docs/R1-2007111.zip R1-2007111 FL Summary #2 for NR PosEnh.docx.

PCT Notification of Transmittal of the International Search Report and the Written Opinion of the International Searching Authority for International Application No. PCT/US2021/060576; dated Mar. 21, 2022.

Office Action for U.S. Appl. No. 17/456,240 dated Jan. 25, 2023.

Final Office Action for U.S. Appl. No. 17/456,240 dated Aug. 18, 2023.

(56) **References Cited**

OTHER PUBLICATIONS

Office Action for Taiwan Application No. 110143675 dated Nov. 26, 2025.
Search Report for Taiwan Application No. 110143675 dated Nov. 24, 2025.
Decision to Grant a Patent for Japanese Application No. 2023-530644 dated Nov. 4, 2025.
Korean Office Action for Application No. 10-2023-7020978 dated Mar. 26, 2026.
Chinese Office Action for Application No. 202180082825.0 dated Apr. 16, 2026.
European Office Action for Application No. 21899034.9 dated Apr. 9, 2026.

* cited by examiner

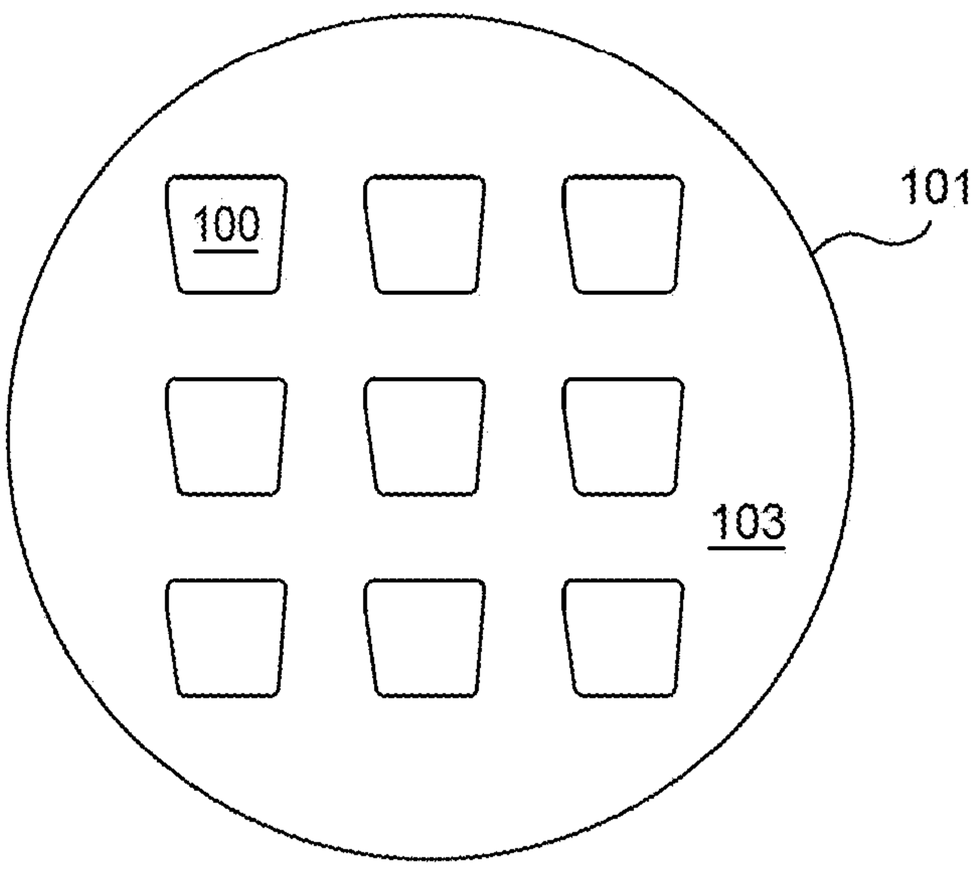

FIG. 1A

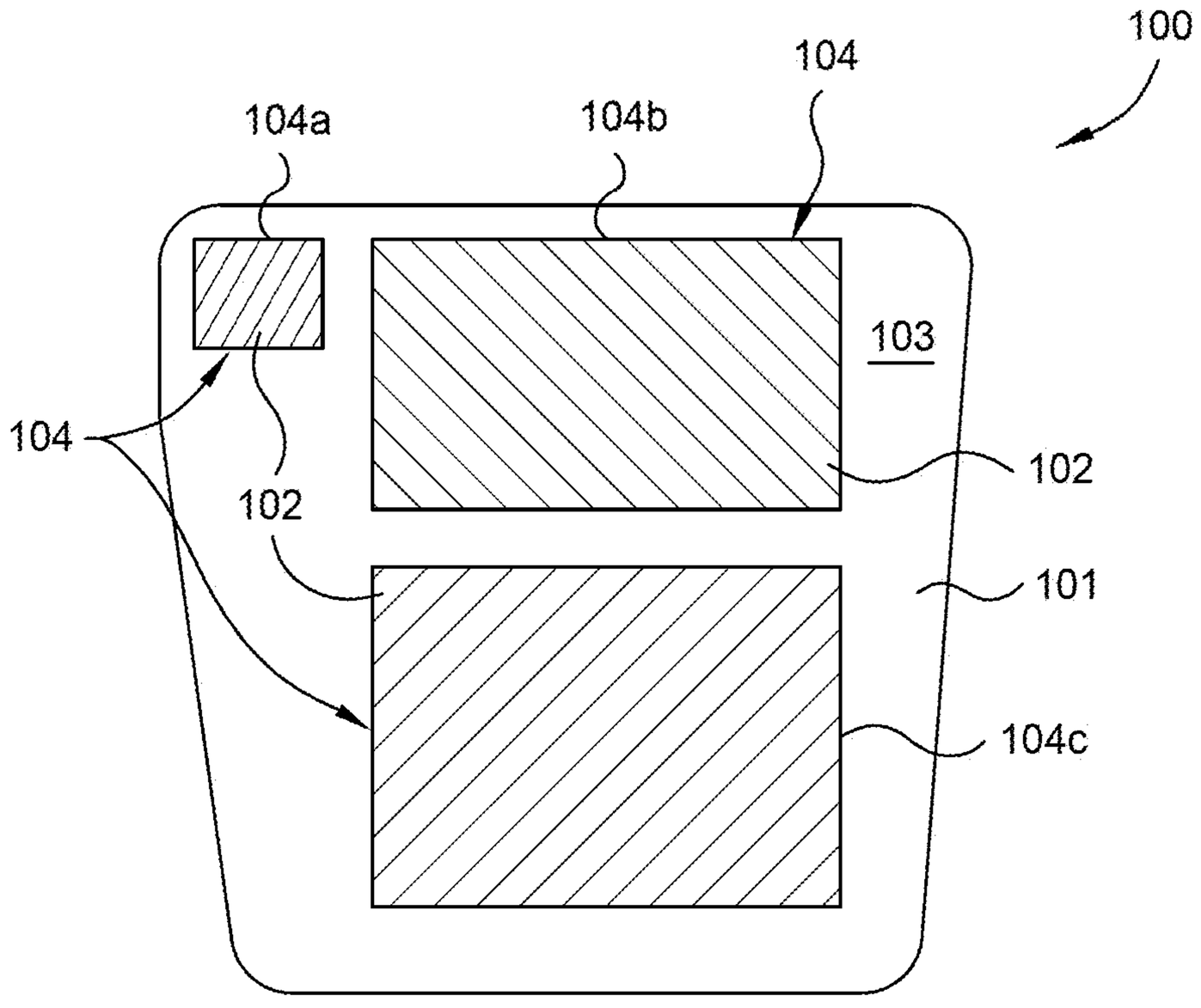

FIG. 1B

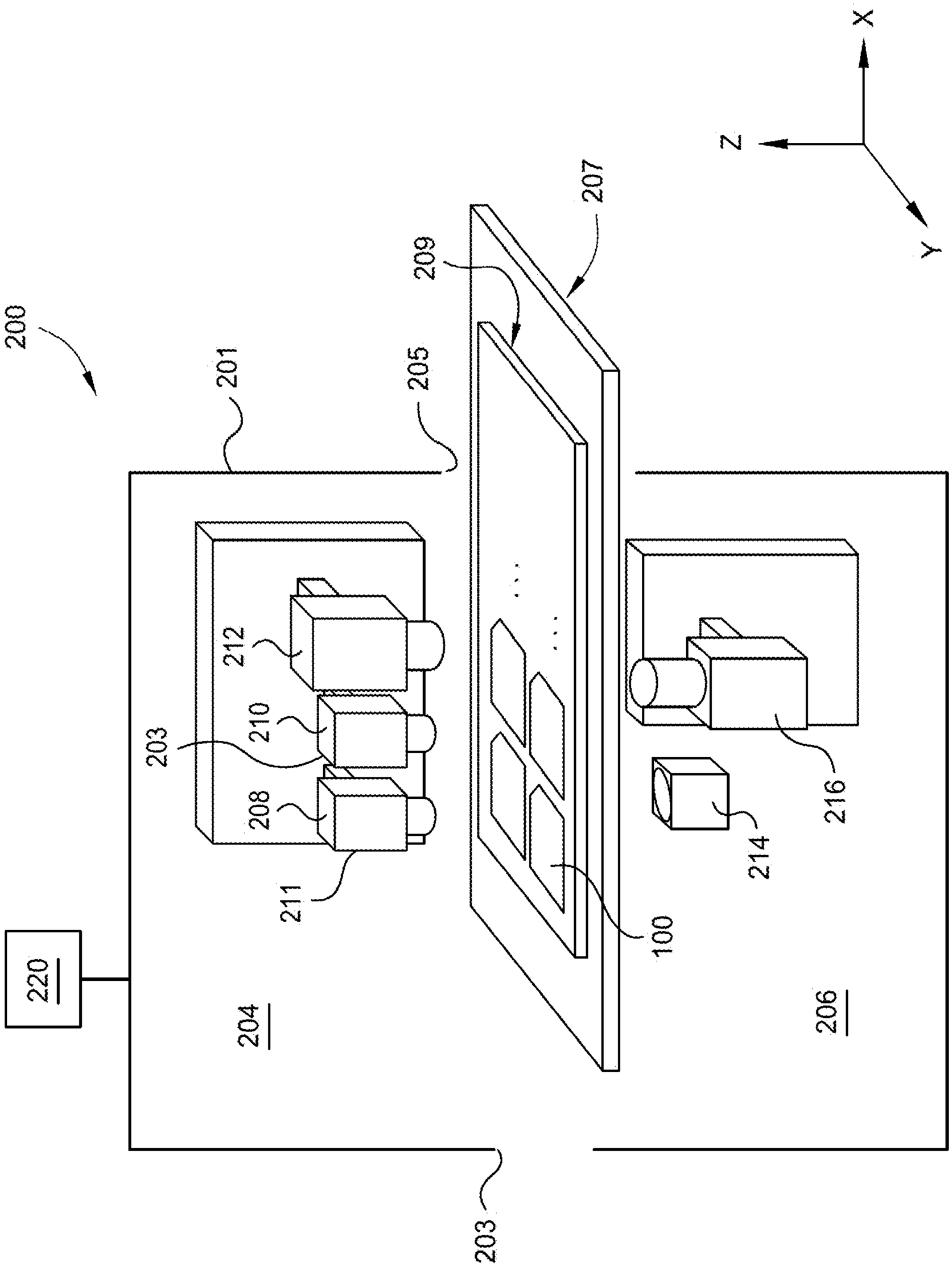
200
201
205
209
207
X
Z
Y
212
210
203
208
211
100
214
216
220
204
206
203

FIG. 2

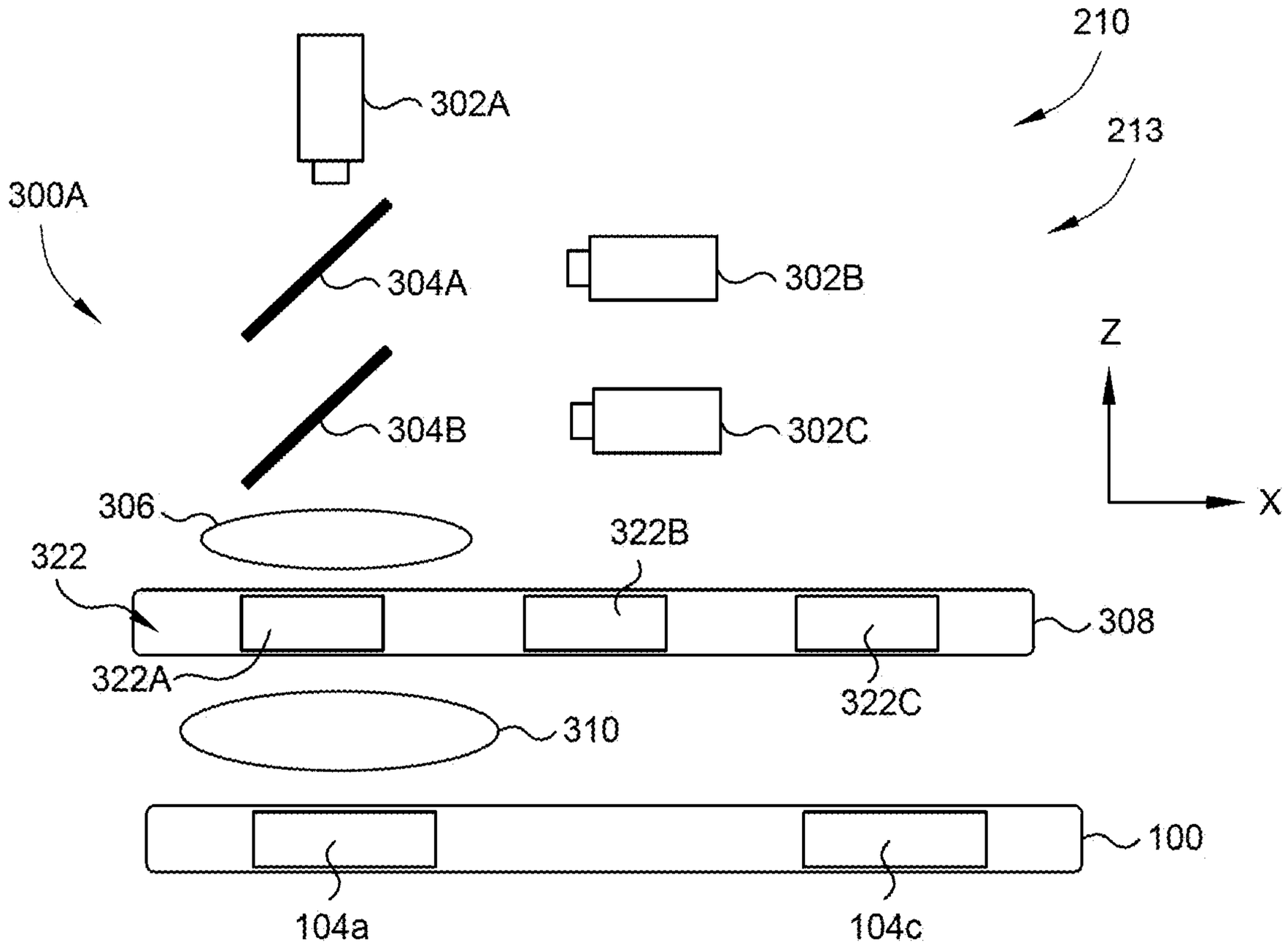
210
213
302A
300A
304A
302B
304B
302C
Z
X
306
322B
322
308
322A
322C
310
100
104a
104c

FIG. 3A

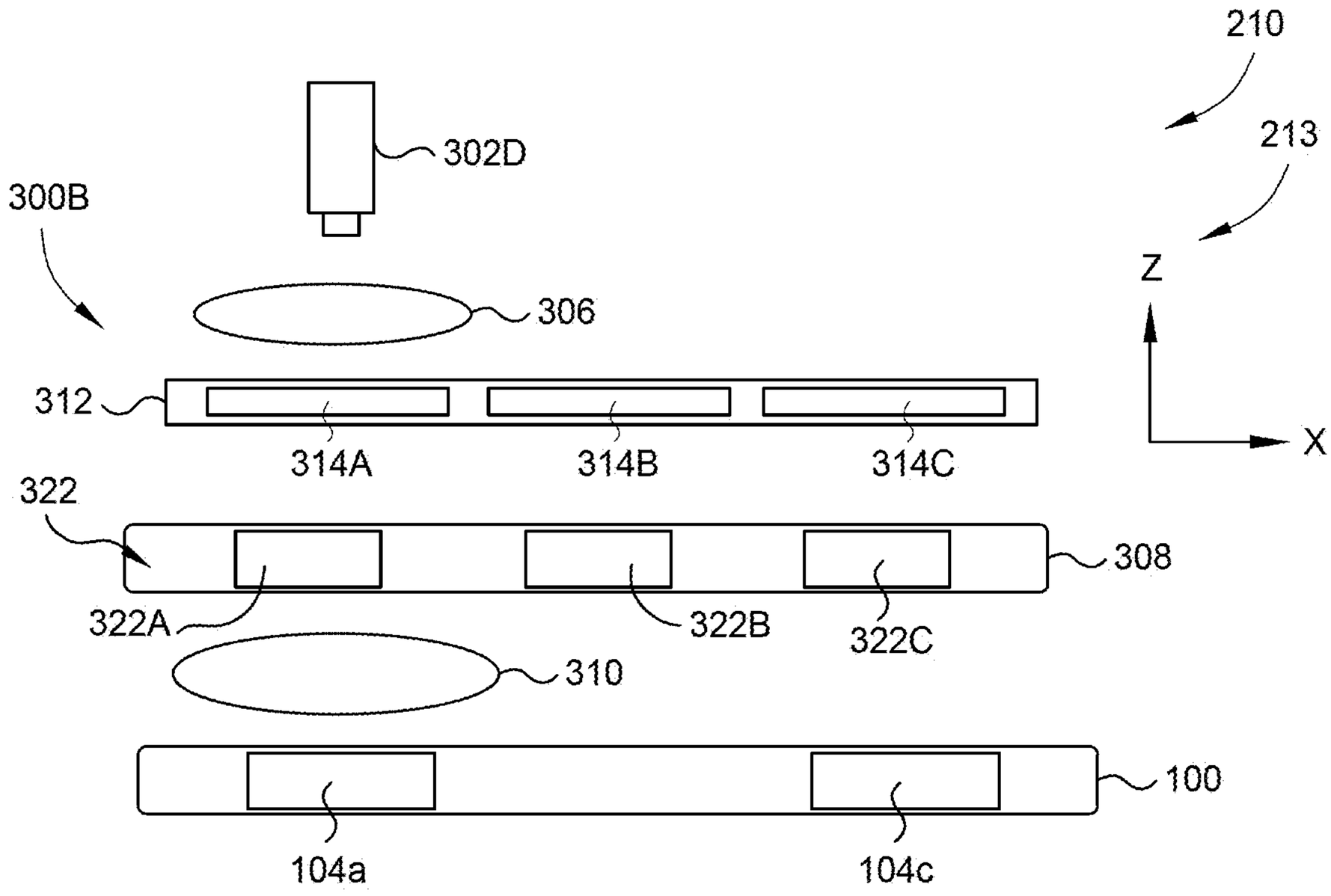
210
213
302D
300B
Z
306
312
X
314A
314B
314C
322
308
322A
322B
322C
310
100
104a
104c

FIG. 3B

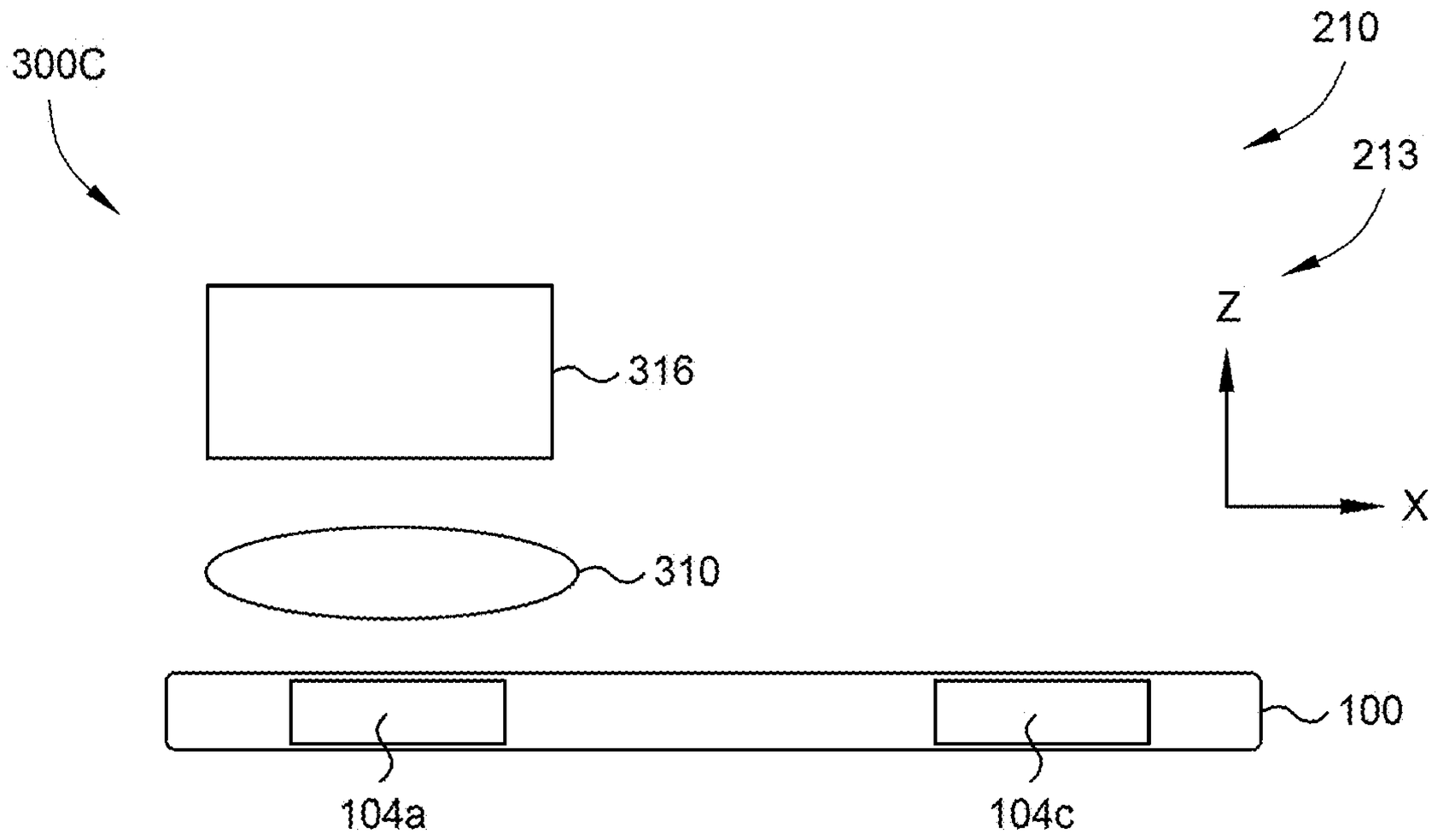
300C
316
310
100
104a
104c
210
213
Z
X

FIG. 3C

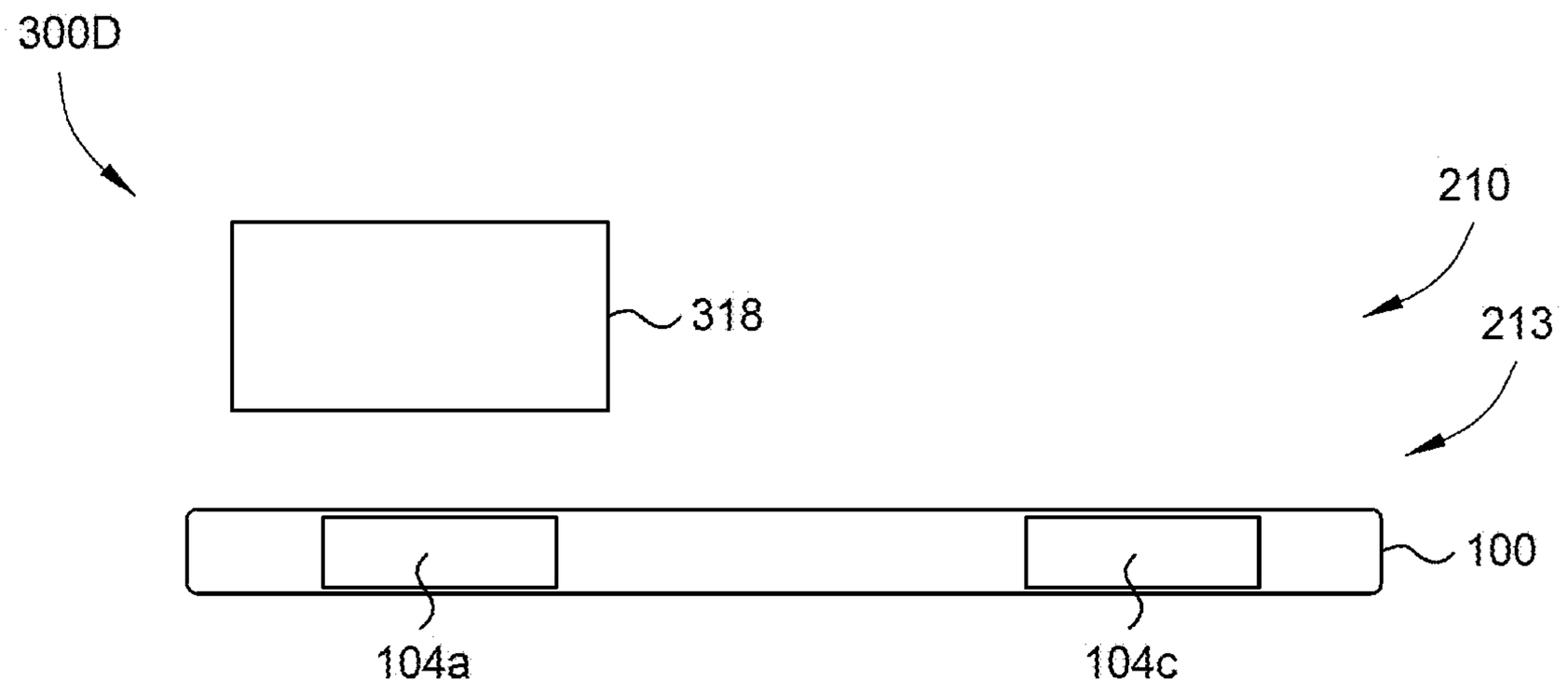
300D
318
100
104a
104c
210
213

FIG. 3D

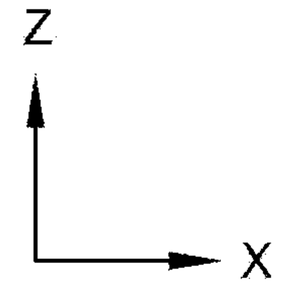
Z
X

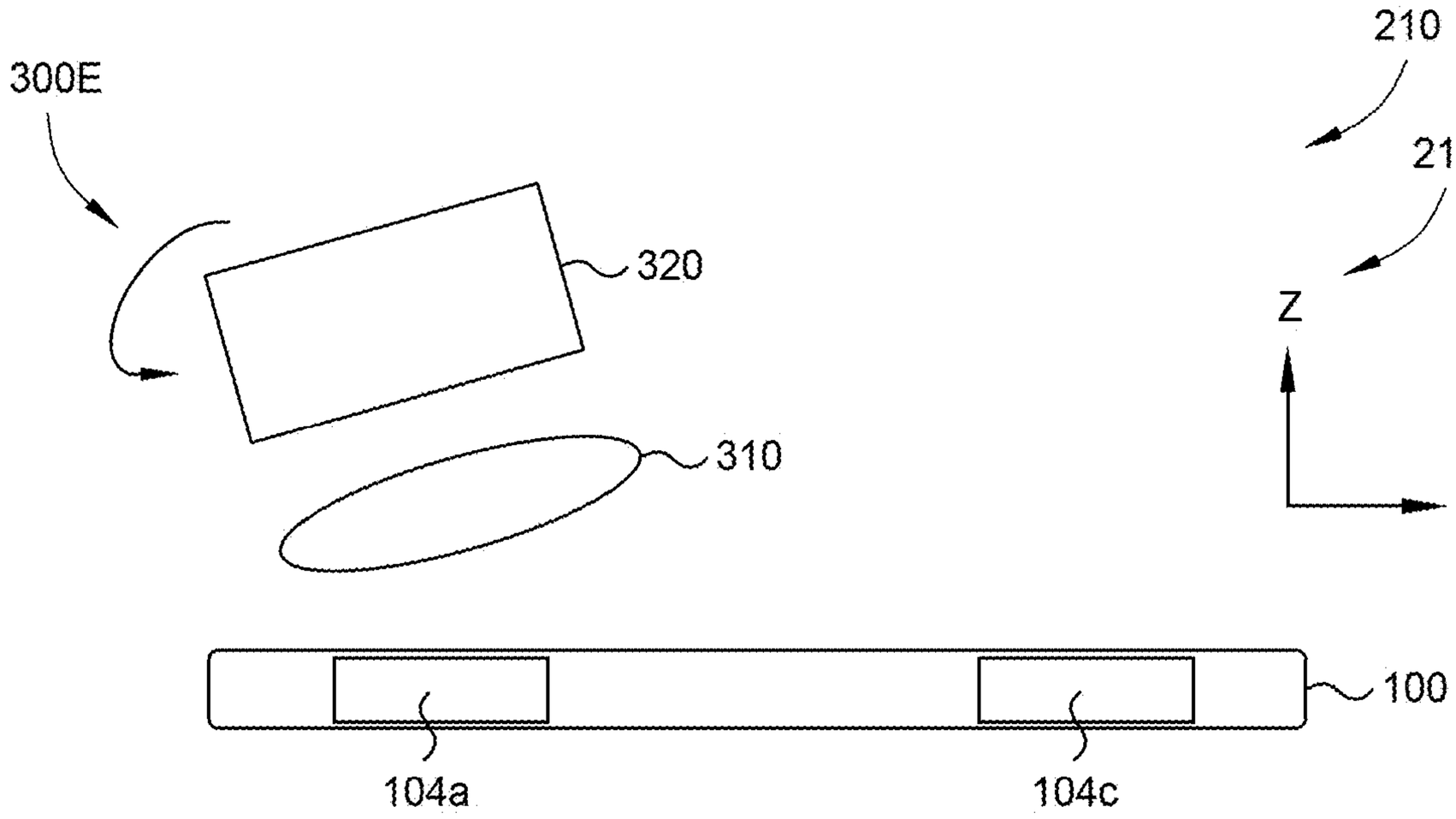

FIG. 3E

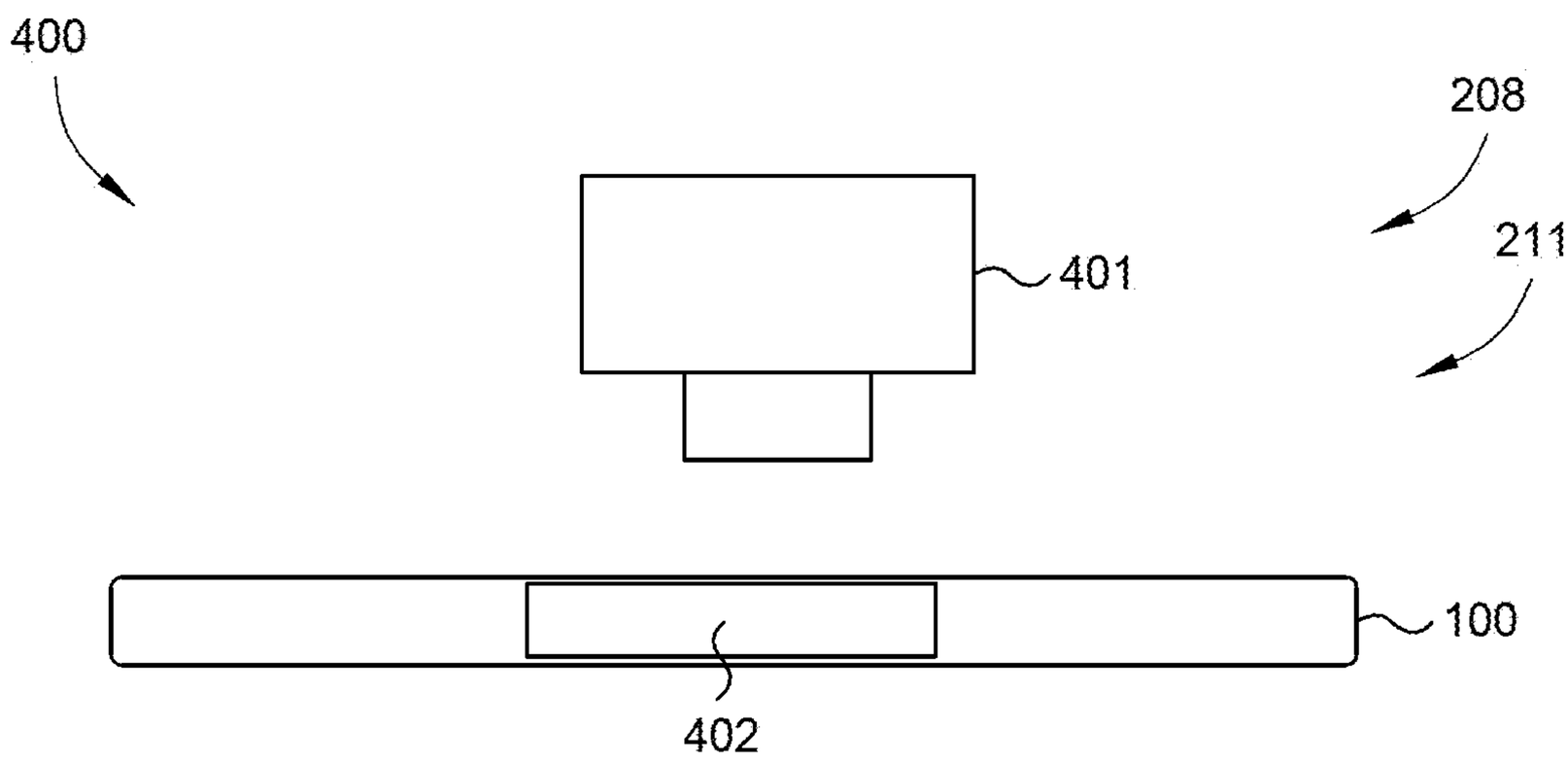

FIG. 4

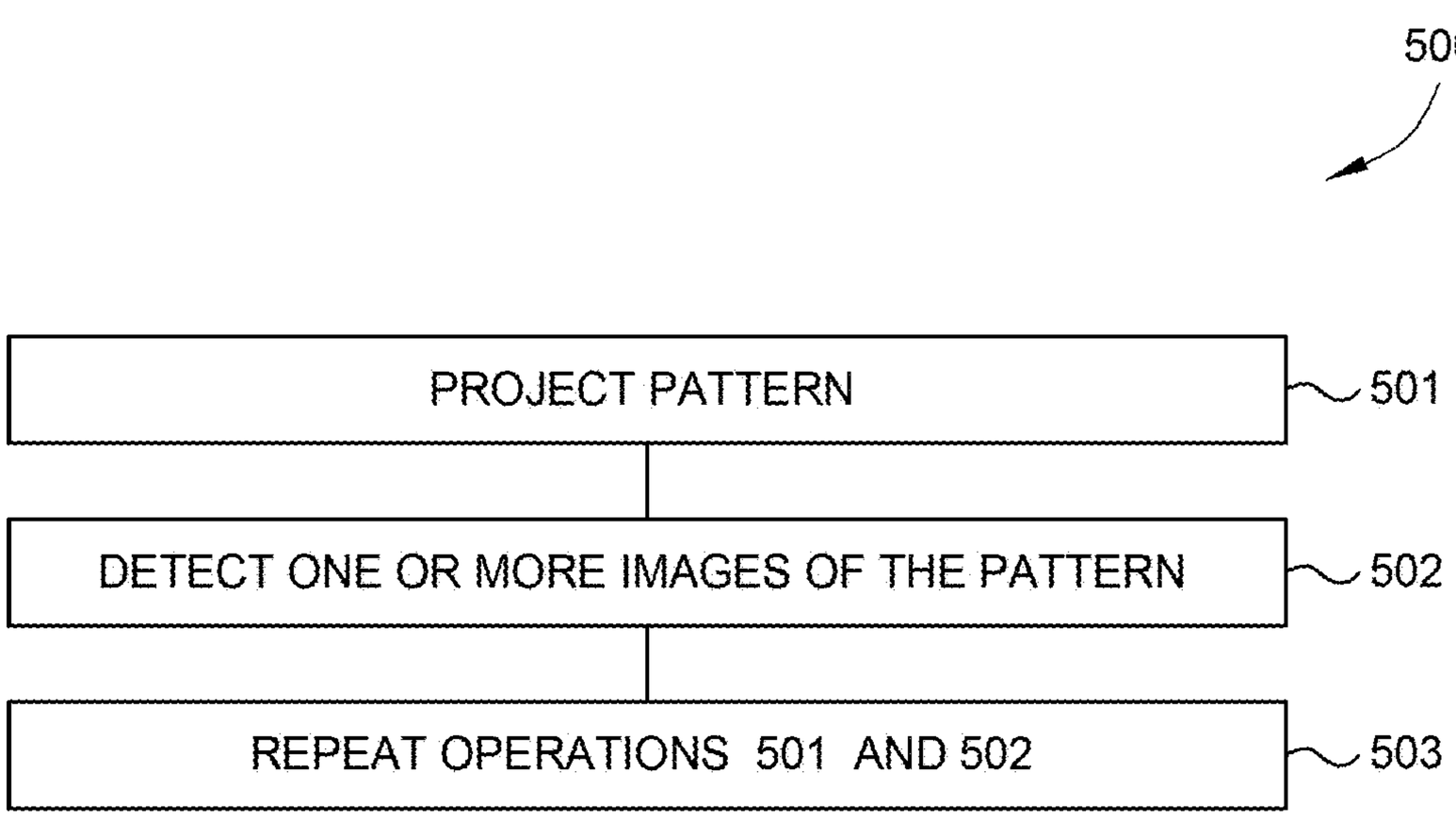
500
PROJECT PATTERN
501
DETECT ONE OR MORE IMAGES OF THE PATTERN
502
REPEAT OPERATIONS 501 AND 502
503

FIG. 5

ILLUMINATION SYSTEM FOR AR METROLOGY TOOL

CROSS-REFERENCE TO RELATED APPLICATIONS

This application is a continuation of U.S. patent application Ser. No. 17/456,240, filed Nov. 23, 2021, which claims the benefit of U.S. Provisional Patent Application Ser. No. 63/184,398, filed May 5, 2021 and U.S. Provisional Patent Application Ser. No. 63/117,576, filed Nov. 24, 2020, all of which are hereby incorporated by reference in their entirety.

BACKGROUND

Field

Embodiments of the present disclosure generally relate to optical devices for augmented, virtual, and mixed reality. More specifically, embodiments described herein provide for light engines of a measurement system and methods of using the light engines.

Description of the Related Art

Virtual reality is generally considered to be a computer generated simulated environment in which a user has an apparent physical presence. A virtual reality experience can be generated in 3D and viewed with a head-mounted display (HMD), such as glasses or other wearable display devices that have near-eye display panels as lenses to display a virtual reality environment that replaces an actual environment.

Augmented reality, however, enables an experience in which a user can still see through the display lenses of the glasses or other HMD device to view the surrounding environment, yet also see images of virtual objects that are generated for display and appear as part of the environment. Augmented reality can include any type of input, such as audio and haptic inputs, as well as virtual images, graphics, and video that enhances or augments the environment that the user experiences. As an emerging technology, there are many challenges and design constraints with augmented reality.

One such challenge is measuring optical devices for image quality standards. To ensure that image quality standards are met, metrology metrics of the fabricated optical devices must be obtained. However, existing measurement systems lack a desired field of view and suffer from ghost imaging. Accordingly, what is needed in the art is a measurement system and methods of using the measurement system with an improved field of view and a decreased occurrence of ghost imaging.

SUMMARY

In one embodiment, a measurement system is provided. The measurement system includes a stage operable to retain an optical device or an optical device substrate having at least one optical device disposed thereon. The measurement system further includes a light engine disposed above the stage. The light engine includes a plurality of light sources. The plurality of light sources are operable to project a light to the optical device at a range of wavelengths. The light engine further includes a first lens operable to collimate the light from each of the plurality of light sources. The light engine further includes a reticle tray disposed below the plurality of light sources. The reticle tray has a plurality of reticles disposed thereon. Each reticle of the plurality of reticles has a pattern to be projected when the light is directed to each reticle of the plurality of reticles. The light engine further includes a second lens operable to receive the pattern projected from each of the plurality of reticles. The second lens is operable to project the pattern to an input coupling grating of the optical device.

In another embodiment, a measurement system is provided. The measurement system includes a stage operable to retain an optical device or an optical device substrate having at least one optical device disposed thereon. The measurement system further includes a light engine disposed above the stage. The light engine includes a module operable to project one or more patterns to the optical device. The light engine is operable to rotate and/or tilt to adjust an incidence angle of the pattern projected to the optical device or the optical device substrate. The measurement system further includes an alignment camera adjacent to the light engine. The alignment camera is positioned to capture one or more images of one or more alignment markers on the optical device or the optical device substrate. The measurement system further includes a reflection detector adjacent to the light engine. The reflection detector is positioned to detect outcoupled beams projected from the optical devices.

In yet another embodiment, a method is provided. The method includes projecting a pattern. The pattern is projected with a light from a light engine. The light engine is disposed in a measurement system. The measurement system includes a stage disposed under the light engine. The measurement system further includes a tray disposed on the stage. The tray includes an optical device or an optical device substrate having at least one optical device disposed thereon and the optical device is operable to receive the pattern. The measurement system further includes a reflection detector oriented toward the stage. The method further includes detecting one or more images of the pattern. The image is detected when the pattern undergoing total internal reflection through the optical device is outcoupled to the reflection detector. The method further includes processing the image to extract metrology metrics.

BRIEF DESCRIPTION OF THE DRAWINGS

So that the manner in which the above recited features of the present disclosure can be understood in detail, a more particular description of the disclosure, briefly summarized above, may be had by reference to embodiments, some of which are illustrated in the appended drawings. It is to be noted, however, that the appended drawings illustrate only exemplary embodiments and are therefore not to be considered limiting of its scope, and may admit to other equally effective embodiments.

FIG. **1**A is a perspective, frontal view of a substrate according to embodiments described herein.

FIG. **1**B is a perspective, frontal view of an optical device according to embodiments described herein.

FIG. **2** is a schematic, cross-sectional view of a measurement system according to embodiments described herein.

FIGS. **3**A-**3**E are schematic views of configurations of a light engine of a measurement system according to embodiments described herein.

FIG. **4** is a schematic view of a configuration of an alignment camera of a measurement system according to embodiments described herein.

FIG. **5** is a flow diagram of a method of optical device metrology according to embodiments described herein.

To facilitate understanding, identical reference numerals have been used, where possible, to designate identical elements that are common to the figures. It is contemplated that elements and features of one embodiment may be beneficially incorporated in other embodiments without further recitation.

DETAILED DESCRIPTION

Embodiments of the present disclosure generally relate to optical devices for augmented, virtual, and mixed reality. More specifically, embodiments described herein provide for light engines of a measurement system and methods of using the light engines. The measurement system includes a stage operable to retain an optical device or an optical device substrate having at least one optical device disposed thereon. The measurement system further includes a light engine disposed above the stage. The light engine includes a plurality of light sources. The plurality of light sources are operable to project a light to the optical device at a range of wavelengths. The light engine further includes a first lens operable to collimate the light from each of the plurality of light sources. The light engine further includes a reticle tray disposed below the plurality of light sources. The reticle tray has a plurality of reticles disposed thereon. Each reticle of the plurality of reticles has a pattern to be projected when the light is directed to each reticle of the plurality of reticles. The light engine further includes a second lens operable to receive the pattern projected from each of the plurality of reticles. The second lens is operable to project the pattern to an input coupling grating of the optical device. The light engine may also include a module to project a pattern.

The method of using the light engine includes projecting a pattern with a light from a light engine. The method further includes detecting one or more images of the pattern. The image is detected when the pattern undergoing total internal reflection through the optical device is outcoupled to a reflection detector. The method further includes processing the image to extract metrology metrics.

FIG. **1**A is a perspective, frontal view of a substrate **101** according to embodiments described herein. The substrate includes a plurality of optical devices **100** disposed on a surface **103** of the substrate **101**. In some embodiments, which can be combined with other embodiments described herein, the optical devices **100** are waveguide combiners utilized for virtual, augmented, or mixed reality. In some embodiments, which can be combined with other embodiments described herein, the optical devices **100** are flat optical devices, such as metasurfaces.

The substrate **101** can be any substrate used in the art, and can be either opaque or transparent to a chosen laser wavelength depending on the use of the substrate **101**. The substrate **101** includes, but is not limited to, silicon (Si), silicon dioxide (SiO_2), fused silica, quartz, silicon carbide (SiC), germanium (Ge), silicon germanium (SiGe), indium phosphide (InP), gallium arsenide (GaAs), gallium nitride (GaN), silicon nitride (SiN), or sapphire containing materials. Additionally, the substrate **101** may have varying shapes, thicknesses, and diameters. For example, the substrate **101** may have a diameter of about 150 mm to about 300 mm. The substrate **101** may have a circular, rectangular, or square shape. The substrate **101** may have a thickness of between about 300 μm to about 1 mm. Although only nine optical devices **100** are shown on the substrate **101**, any number of optical devices **100** may be disposed on the surface **103** of the substrate **101**.

FIG. **1**B is a perspective, frontal view of an optical device **100**. It is to be understood that the optical devices **100** described herein are exemplary optical devices and the other optical devices may be used with or modified to accomplish aspects of the present disclosure. The optical device **100** includes a plurality of optical device structures **102** disposed on a surface **103** of a substrate **101**. The optical device structures **102** may be nanostructures having sub-micron dimensions, e.g., nano-sized dimensions. Regions of the optical device structures **102** correspond to one or more gratings **104**, such as a first grating **104***a*, a second grating **104***b*, and a third grating **104***c*. In one embodiment, which can be combined with other embodiments described herein, the optical device **100** includes at least the first grating **104***a* corresponding to an input coupling grating and the third grating **104***c* corresponding to an output coupling grating. In another embodiment, which can be combined with other embodiments described herein, the optical device **100** also includes the second grating **104***b* corresponding to an intermediate grating. The optical device structures **102** may be angled or binary. The optical device structures **102** may have other cross-sections including, but not limited to, circular, triangular, elliptical, regular polygonal, irregular polygonal, and/or irregular shaped cross-sections.

In operation, the first grating **104***a* receives incident beams of light having an intensity from a light engine. In one embodiment, which can be combined with other embodiments described herein, the light engine is a microdisplay. The incident beams are split by the optical device structures **102** into T1 beams that have all of the intensity of the incident beams in order to direct a virtual image to the intermediate grating (if utilized) or to the third grating **104***c*. In one embodiment, which can be combined with other embodiments described herein, the T1 beams undergo total-internal-reflection (TIR) through the optical device **100** until the T1 beams come in contact with the optical device structures **102** of the intermediate grating. The optical device structures **102** of the intermediate grating diffract the T1 beams to T−1 beams that undergo TIR through the optical device **100** to the optical device structures **102** of the third grating **104***c*. The optical device structures **102** of the third grating **104***c* outcouple the T−1 beams to the user's eye. The T−1 beams outcoupled to the user's eye display the virtual image produced from the light engine from the user's perspective and further increase the viewing angle from which the user can view the virtual image. In another embodiment, which can be combined with other embodiments described herein, the T1 beams undergo total-internal-reflection (TIR) through the optical device **100** until the T1 beams come in contact with the optical device structures **102** of the third grating **104***c* and are outcoupled to display the virtual image produced from the light engine.

To ensure that the optical devices **100** meet image quality standards, metrology metrics of the fabricated optical devices **100** must be obtained. The metrology metrics of each optical device **100** are tested to ensure that predetermined values are achieved. Embodiments of the measurement system **200** described herein provide for the ability to obtain multiple metrology metrics with increased throughput. The metrology metrics include one or more of an angular uniformity metric, a contrast metric, a efficiency metric, a color uniformity metric, a modulation transfer function (MTF) metric, a field of view (FOV) metric, a ghost image metric, and an eye box metric.

FIG. **2** is a schematic, cross-sectional view of a measurement system **200** according to embodiments described herein. The measurement system **200** includes a body **201**

with a first opening **203** and a second opening **205** to allow a stage **207** to move therethrough. The stage **207** is operable to move in an X-direction, a Y-direction, and a Z-direction in the body **201** of the measurement system **200**. The stage **207** includes a tray **209** operable to retain the optical devices **100** (as shown herein) or one or more substrates **101** with the optical devices **100** disposed thereon.

The measurement system **200** is operable to obtain one or more metrology metrics including one or more of the angular uniformity metric, the contrast metric, the efficiency metric, the color uniformity metric, the MTF metric, the FOV metric, the ghost image metric, or the eye box metric. The stage **207** and the tray **209** may be transparent such that the metrology metrics obtained by the measurement system **200** are not impacted by the translucence of the stage **207** or the tray **209**. The measurement system **200** is in communication with a controller **220**. The controller **220** is operable to facilitate operation of the measurement system **200**.

The measurement system **200** includes an upper portion **204** oriented toward a top side **222** of the optical devices **100** and a lower portion **206** oriented toward a bottom side **224** of the optical device **100**. The upper portion **204** of the measurement system **200** includes an alignment camera **208**, a light engine **210**, and a reflection detector **212**. The alignment camera **208** is operable to determine a position of the stage **207**. The alignment camera **208** is also operable to determine a position of the optical devices **100** disposed on the stage **207**. The alignment camera **208** includes an alignment camera body **211**. The light engine **210** is operable to project light. For example, the light engine **210** is operable to illuminate a first grating **104***a* of the optical devices **100**. The light engine **210** includes a light engine body **213**. In one embodiment, which can be combined with other embodiments described herein, the light engine **210** projects a pattern to the first grating **104***a*. The reflection detector **212** detects outcoupled beams projected from a third grating **104***c* of the optical devices **100**. The outcoupled beams may be emitted from the top side **222** or the bottom side **224** of the optical devices **100**. The outcoupled beams may correspond to the pattern from the light engine **210**. One or more images of the pattern are detected by the reflection detector **212**. The one or more images of the pattern may be processed with the controller **220** to extract each metrology metric.

The lower portion **206** of the measurement system **200** includes a code reader **214** and a transmission detector **216**. The code reader **214** and the transmission detector are positioned opposite the alignment camera **208**, the light engine **210**, and the reflection detector **212** on the other side of the stage **207**. The code reader **214** is operable to read a code of the optical devices **100**, such as a quick response (QR) code or barcode of an optical device **100**. The code read by the code reader **214** may include identification information and/or instructions for obtaining the one or more metrology metrics of the optical devices **100**. The transmission detector **216** detects outcoupled beams projected from the third grating **104***c* though the bottom side **224** of the optical devices **100**. In one embodiment, which can be combined with other embodiments described herein, the transmission detector **216** is coupled to a transmission detector stage **226**. The transmission detector stage **226** is operable to move the transmission detector **216** in an X-direction, a Y-direction, and a Z-direction. The transmission detector stage **226** is operable to adjust the position of the transmission detector **216** to enhance the detection of the outcoupled beams projected from the third grating **104***c*

In operation, the metrology metrics are obtained by illuminating the first grating **104***a* of an optical device **100** with the light engine **210**. The light engine **210** projects a pattern to the one or more optical devices **100**. The incoupled light undergoes TIR until the light is outcoupled (e.g., reflected or transmitted) out of the optical device **100**. The pattern is captured by the reflection detector **212** as one or more images. The one or more images may correspond to red, green, and blue channels. The one or more images may also correspond to one or more different metrology metrics. The one or more images are full-field images.

FIG. **3**A is a schematic view of a first configuration **300**A of a light engine **210** of a measurement system **200** according to embodiments described herein. The first configuration **300**A includes a first light source **302**A, a second light source **302**B, a third light source **302**C, a first mirror **304**A, a second mirror **304**B, a first lens **306**, a reticle tray **308**, and a second lens **310**. The first light source **302**A, the second light source **302**B, the third light source **302**C, the first mirror **304**A, the second mirror **304**B, the first lens **306**, the reticle tray **308**, and the second lens **310** are disposed in a light engine body **213**.

The first light source **302**A is operable to project a first light corresponding to a first wavelength or a first range of wavelengths. In one embodiment, which can be combined with other embodiments described herein, the first light source **302**A is a light-emitting diode (LED). In another embodiment, which can be combined with other embodiments described herein, the first wavelength or the first range of wavelengths is 620 nm to 750 nm corresponding to red light. The first light is directed to the first lens **306**.

The second light source **302**B is operable to project a second light corresponding to a second wavelength or a second range of wavelengths. In one embodiment, which can be combined with other embodiments described herein, the second light source **302**B is a LED. In another embodiment, which can be combined with other embodiments described herein, the second wavelength or the second range of wavelengths is 495 nm to 570 nm corresponding to green light. The second light source **302**B projects the second light to the first mirror **304**A. The first mirror **304**A is operable to direct the second light toward the first lens **306**.

The third light source **302**C is operable to project a third light corresponding to a third wavelength or a third range of wavelengths. In one embodiment, which can be combined with other embodiments described herein, the third light source **302**C is a LED. In another embodiment, which can be combined with other embodiments described herein, the third wavelength or the third range of wavelengths is 450 nm to 495 nm corresponding to blue light. The third light source **302**C projects the third light to the second mirror **304**B. The second mirror **304**B is operable to direct the third light toward the first lens **306**.

The first light source **302**A, the second light source **302**B, and the third light source **302**C are not limited to the orientations and positions shown in FIG. **3**A. For example, the first light source **302**A may be configured to project the first light to first mirror **304**A or to the second mirror **304**B. In one embodiment, which can be combined with other embodiments described herein, the first light source **302**A, the second light source **302**B, and the third light source **302**C are point sources or extended sources. The first mirror **304**A and the second mirror **304**B are operable to reflect any range of wavelengths projected toward the first mirror **304**A and the second mirror **304**B. The first mirror **304**A and the second mirror **304**B may be dichroic mirrors.

The first light, the second light, and the third light are directed to the first lens **306**. In one embodiment, which can be combined with other embodiments described herein, the first lens **306** is a collimation lens. The first lens **306** is operable to collimate the light, such as the first light, the second light, or the third light, when passing through the first lens **306**. The first lens **306** collimates the light such that the light has a light diameter of about 10 mm to about 50 mm. The light diameter corresponds to a field of view of the measurement system **200**. In some embodiments, which can be combined with other embodiments described herein, the light sources **302**A, **302**B and **302**C are extended light sources positioned to direct light to the first lens **306** to reduce the spatial coherence of the illumination. In some embodiments, which can be combined with other embodiments described herein, the first lens **306** is removed from the light engine **210** to improve throughput.

The reticle tray **308** includes reticles **322** (i.e., a first reticle **322**A, a second reticle **322**B, and a third reticle **322**C). The first lens **306** collimates the light toward the reticles **322** on the reticle tray **308**. Each of the first reticle **322**A, the second reticle **322**B, and the third reticle **322**C may include a pattern to be projected to a first grating **104***a* of the optical device **100**. Each of the first reticle **322**A, the second reticle **322**B, and the third reticle **322**C may include different patterns. The pattern is projected when one of the first light source **302**A, the second light source **302**B, and the third light source **302**C project light to the reticles **322** such that the reticles **322** are illuminated. The pattern then illuminates the first grating **104***a*. The first grating **104***a* corresponds to an input coupling grating of the optical device **100**. The reticle tray **308** is operable to move in one or more of a X-direction, a Y-direction, and a Z-direction. Therefore, the reticle tray **308** may be adjusted such that light is projected though one of the first reticle **322**A, the second reticle **322**B, and the third reticle **322**C during operations of the methods described herein. The reticle tray **308** is adjusted in the Z-direction to improve the quality of the pattern to be projected. For example, adjusting the reticle tray **308** in the Z-direction may change the angle and intensity of the light incident on the reticles **322**.

Each of the patterns of the first reticle **322**A, the second reticle **322**B, and the third reticle **322**C may correspond to a different metrology metric to be determined by the measurement system **200**. For example, each respective pattern of the reticles **322** may allow for a respective metrology metric to be determined. In some embodiments, which can be combined with other embodiments described herein, the metrology metrics may correspond to the same pattern. In other embodiments, which can be combined with other embodiments described herein, the metrology metrics may require more than one pattern to be extracted. Additionally, each of the patterns of the first reticle **322**A, the second reticle **322**B, and the third reticle **322**C may correspond to multiple metrology metrics. Thus, multiple reticles **322** are needed to obtain different metrology metrics for the optical device **100**. The reticle tray **308** is not limited to three reticles **322**. The reticle tray **308** is operable to retain more or less than three reticles **322**. For example, there may be an array of the reticles **322** disposed on the reticle tray **308**.

The first light, the second light, and the third light are directed from the reticles **322** to the second lens **310**. In one embodiment, which can be combined with other embodiments described herein, the second lens **310** is an eyepiece lens. The second lens **310** is operable to direct the pattern from the reticles **322** to the first grating **104***a*. The second lens **310** converts the pattern such that the first grating **104***a* can receive the pattern. The pattern projected from the reticles **322** undergoes TIR until it is outcoupled from the third grating **104***c*. The third grating **104***c* corresponds to an output coupling grating.

FIG. **3**B is a schematic view of a second configuration **300**B of a light engine **210** of a measurement system **200** according to embodiments described herein. The second configuration **300**B includes a white light source **302**D, the first lens **306**, a color filter tray **312**, the reticle tray **308**, and the second lens **310**. The white light source **302**D, the first lens **306**, the color filter tray **312**, the reticle tray **308**, and the second lens **310** are disposed in a light engine body **213**.

The white light source **302**D is operable to project a white light corresponding to a range of wavelengths. In one embodiment, which can be combined with other embodiments described herein, the white light source **302**D is a LED. In another embodiment, which can be combined with other embodiments described herein, the range of wavelengths is 390 nm to 750 nm corresponding to white light. The color filter tray **312** includes a first color filter **314**A, a second color filter **314**B, and a third color filter **314**C. The first color filter **314**A is operable to allow the white light to be filtered such that a first wavelength or a first range of wavelengths of a first light to be projected to the optical device **100** is projected to the optical device **100**. The second color filter **314**B is operable to allow the white light to be filtered such that a second wavelength or a second range of wavelengths of a second light is projected to the optical device **100**. The third color filter **314**C is operable to allow the white light to be filtered such that a third wavelength or a third range of wavelengths of a third light is projected to the optical device **100**. The color filter tray **312** is operable to move in one or more of a X-direction, a Y-direction, and a Z-direction such that light is projected though one of the first color filter **314**A, the second color filter **314**B, and the third color filter **314**C during operations of the methods described herein.

The white light source **302**D directs the white light through the first lens **306** and to the color filter tray **312**. The color filter tray converts the white light into a filtered light such as the first light, the second light, or the third light described above. The light is directed to the reticle tray **308** to project the pattern corresponding to the reticles **322**, as described above with reference to the first configuration **300**A. The pattern is directed to the second lens **310**. The second lens **310** converts the pattern such that the first grating **104***a* can receive the pattern. The pattern projected from the reticles **322** undergoes TIR until it is outcoupled from the third grating **104***c*. The third grating **104***c* corresponds to an output coupling grating.

FIG. **3**C is a schematic view of a third configuration **300**C of a light engine **210** of a measurement system **200** according to embodiments described herein. The third configuration **300**C includes a display module **316** and the second lens **310**. The display module **316** and the second lens **310** are disposed in the light engine body **213**. The display module **316** includes a micro LED module, a liquid crystal on silicon (LCOS) module, digital light processing (DLP) module, or laser projection module. The display module **316** is operable to project a pattern to the first grating **104***a* of the optical device **100**. The display module **316** is operable to project multiple different patterns to the first grating **104***a*. Each pattern projected by the display module **316** may correspond to a different metrology metric to be determined by the measurement system **200**. Each pattern may correspond to red, green, and blue channels. The second lens **310** converts the pattern such that the first grating **104***a* can receive the

pattern. Each pattern projected from the display module **316** undergoes TIR until it is outcoupled from the third grating **104***c*. The third grating **104***c* corresponds to an output coupling grating.

FIG. **3**D is a schematic view of a fourth configuration **300**D of a light engine **210** of a measurement system **200** according to embodiments described herein. The fourth configuration **300**D includes a laser module **318** disposed in the light engine body **213**. The laser module **318** may be one of a laser projection module or laser scanning module. The laser module **318** is operable to project a pattern to the first grating **104***a* of the optical device **100**. The laser module **318** is operable to project multiple different patterns to the first grating **104***a*. Each pattern projected by the laser module **318** may correspond to a different metrology metric to be determined by the measurement system **200**. Each pattern may correspond to red, green, and blue channels. The pattern may be projected to a single pixel of the first grating **104***a*. The laser module **318** is scanned over the first grating **104***a* such that the pattern is projected to multiple pixels of the first grating **104***a*. Each pattern projected from the laser module **318** undergoes TIR until it is outcoupled from the third grating **104***c*. The third grating **104***c* corresponds to an output coupling grating.

FIG. **3**E is a schematic view of a fifth configuration **300**E of a light engine **210** of a measurement system **200** according to embodiments described herein. The fifth configuration **300**E includes a module **320** and the second lens **310**. The module **320** and the second lens **310** are disposed in the light engine body **213**. In one embodiment, which can be combined with other embodiments described herein, the module **320** may be the display module **316**. In another embodiment, which can be combined with other embodiments described herein, the module **320** may include a light source (i.e., the first light source **302**A, the second light source **302**B, the third light source **302**C, or the white light source **302**D with the color filter tray **312**) and the reticles **322** on the reticle tray **308**. The module **320** is operable to be rotated and/or tilted. The rotation of the module **320** allows for an incidence angle of the light projected from the module **320** to be adjusted. For example, the module **320** is rotated and/or tilted with rotation stages. The module **320** is operable to project multiple different patterns to the first grating **104***a*. Each pattern projected by the module **320** may correspond to a different metrology metric to be determined by the measurement system **200**. Each pattern may correspond to red, green, and blue channels. The second lens **310** converts the pattern such that the first grating **104***a* can receive the pattern. By rotating and/or tilting the module **320**, ghost imaging may be reduced. Ghost imaging may be reduced due to the reflection of the pattern projected to the first grating **104***a* not being reflected directly back to the module **320** and the second lens **310**. Additionally, the rotation and/or tilting the module **320** will provide for the extension of the field of view for the measurement system **200**. For example, the rotation and/or the tilting of the module **320** provides a field of view between about 10 degrees and about 120 degrees.

The configurations **300**A-**300**E of the light engine **210** are all operable to be utilized in the measurement system **200**. The configurations **300**A-**300**E of the light engine **210** to be used in the measurement system **200** are determined by the design of the optical device **100**. Further, the configuration **300**A-**300**E can be chosen based upon the intended use of the optical device **100** to be measured by the measurement system **200**. For example, the field of view of the configuration **300**A-**300**E should be matched to the field of view that will be used with the optical device **100**. The configurations **300**A-**300**E are designed for measurement systems **200** with a field of view between about 10 degrees and about 120 degrees.

FIG. **4** is a schematic view of a configuration **400** of an alignment camera **208** of a measurement system **200** according to embodiments described herein. The alignment camera **208** includes one or more cameras **401** disposed therein. The one or more cameras **401** capture one or more images of one or more alignment markers **407** on the optical device **100**. The one or more images are processed in the controller **220** to determine the location and orientation of the optical device **100**. A scanning path for the measurement system **200** may be generated along the optical device **100** based on the one or more images of the alignment markers **407**. The scanning path is operable to correct for misalignment of the optical device **100**. The alignment camera **208** is operable to correct any misalignment of the optical device **100** relative to the light engine **210** and the reflection detector **212**. The misalignment correction via the one or more alignment markers **407** allow the light engine **210** to accurately project the pattern to the first grating **104***a*. For example, the alignment marker **407** provides for a field of view to align with the first grating **104***a*. Therefore, having the field of view aligned with and substantially equal to a width of the first grating **104***a* improves the overall efficiency of the measurement system **200** by efficiently incoupling the light to the first grating **104***a*.

FIG. **5** is flow diagram of a method **500** of optical device metrology according to embodiments described herein. The method **500** may be utilized to project a pattern to a first grating **104***a* of an optical device **100**. The method **500** may be utilized with any of the configurations **300**A-**300**E of the light engine **210**. In one embodiment, which can be combined with other embodiments described herein, the light engine **210** is operable to be disposed on a rotation stage such that the light engine **210** may be rotated and/or tilted as desired during the method **500**.

At operation **501**, a pattern is projected. The pattern is projected via a light engine **210**. As shown in the first configuration **300**A, a light may be projected by a first light source **302**A. The light may be directed to a first lens **306** from the first light source **302**A to collimate the light. As shown in the second configuration **300**B, the light may be projected from a white light source **302**D passing through a first color filter **314**A of a color filter tray **312**. The light may be directed to a first lens **306** from the white light source **302**D to collimate the light. As shown in the third configuration **300**C, the light may be projected by the display module **316**. As shown in the fourth configuration **300**D, the light may be projected by the laser module **318**. As shown in the fifth configuration **300**E, the light may be projected by the module **320**. The light corresponds to a wavelength or a range of wavelengths.

In some embodiments, which can be combined with other embodiments described herein, as shown in the first configuration **300**A and the second configuration **300**B, a reticle tray **308** is positioned such that the light is projected to the reticle tray **308**. The reticle tray **308** is positioned such that one of a first reticle **322**A, a second reticle **322**B, or a third reticle **322**C of a plurality of reticles **322** disposed on the reticle tray **308** may receive the light from the first lens **306**. The reticle **322** is chosen based on one or more metrology metrics to be determined. The pattern corresponding to one of the first reticle **322**A, the second reticle **322**B, or the third reticle **322**C is projected to a first grating **104***a* of an optical device **100**. The designed pattern may be directed to the first

grating **104***a* through a second lens **310**. The second lens **310** is an eyepiece lens. In other embodiments, which can be combined with other embodiments described herein, as shown in the third configuration **300**C, the fourth configuration **300**D, and the fifth configuration **300**E, the pattern is produced by one of the display module **316**, the laser module **318**, or the module **320**, respectively.

At operation **502**, one or more images of the pattern are detected. The one or more images of the pattern are captured by a reflection detector **212**. The pattern undergoes TIR until it is outcoupled (e.g., reflected or transmitted) and captured by the reflection detector **212** as the one or more images. The one or more images are processed to extract the metrology metrics. The images are full-field images. The one or more images may be processed in a controller **220** (shown in FIG. **2**). The controller **220** may be a remote controller **220** operable to receive the one or more images. The controller **220** may include a central processing unit (CPU) configured to process computer-executable instructions stored in memory. The computer-executable instructions may include algorithms configured to extract the metrology metrics. For example, the controller **220** is configured to perform embodiments of the method **500** described herein, such as processing the one or more images to determine values for the metrology metric corresponding to the respective pattern captured in the one or more images. One of skill in the art will appreciate that one or more elements of the controller **220** may be located remotely and accessed via a network.

At operation **503**, the operation **501** and the operation **502** are repeated for subsequent patterns. Each of the subsequent patterns may be projected by the light corresponding to a wavelength or a range of wavelengths. For example, each pattern may be red, green, or blue channels. As shown in FIGS. **3**A and **3**B, the first configuration **300**A and the second configuration **300**B each include the reticle tray **308** such that each pattern of the subsequent patterns may correspond to a different reticle **322**. As shown in FIGS. **3**C-**3**E, the third configuration **300**C, the fourth configuration **300**D, and the fifth configuration **300**E include the display module **316**, the laser module **318**, or the module **320**, respectively, such that each pattern of the subsequent patterns may be produced by the display module **316**, the laser module **318**, or the module **320**. In one embodiment, which can be combined with other embodiments described herein, each subsequent pattern is different from the preceding patterns. In another embodiment, which can be combined with other embodiments described herein, each subsequent pattern is the same as the preceding patterns.

In summation, light engines of a measurement system and methods of using the light engines are described herein. The measurement system includes a light engine operable to illuminate a first grating of an optical device. The light engine projects a pattern to the first grating such that a metrology metric may be extracted from one or more images captured by a detector of the measurement system. The metrology metrics determine if the optical device meets image quality standards. The light engine is operable to rotate and tilt such that ghost imaging may be reduced. Additionally, an alignment camera of the measurement system allows for misalignment correction in the measurement system.

While the foregoing is directed to embodiments of the present disclosure, other embodiments of the disclosure may be devised without departing from the basic scope thereof, and the scope thereof is determined by the claims that follow.

What is claimed is:

1. A measurement system, comprising:

a stage operable to retain an optical device or an optical device substrate having at least one optical device disposed thereon;

a light engine disposed above the stage, the light engine including:

one or more light sources operable to project a light to the optical device at a range of wavelengths;

a reticle tray disposed below the one or more light sources, the reticle tray having a plurality of reticles disposed thereon, each reticle of the plurality of reticles having a different pattern to be projected when the light is directed to each reticle of the plurality of reticles;

an alignment camera adjacent to the light engine, the alignment camera positioned to capture one or more images of one or more alignment markers on the optical device or the optical device substrate; and

a reflection detector adjacent to the light engine, the reflection detector positioned to detect outcoupled beams projected from the at least one optical device.

2. The measurement system of claim **1**, wherein the light engine further includes a second lens operable to receive a pattern, the second lens operable to project the pattern to an input coupling grating of the optical device.

3. The measurement system of claim **1**, wherein the patterns may each correspond to red, green, and blue channels.

4. The measurement system of claim **1**, wherein is a micro LED module, a liquid crystal on silicon (LCOS) module, digital light processing (DLP) module, or laser projection module operable to project the one or more patterns.

5. The measurement system of claim **1**, wherein a field of view of the light engine is between about 10 degrees and about 100 degrees.

6. The measurement system of claim **1**, wherein the stage is transparent.

7. A measurement system, comprising:

a stage operable to retain an optical device or an optical device substrate having at least one optical device disposed thereon; and

a light engine disposed above the stage, the light engine including:

a plurality of light sources, the plurality of light sources operable to project a light to the optical device at a range of wavelengths;

a first lens operable to collimate the light from each of the plurality of light sources;

a reticle tray disposed below the plurality of light sources, the reticle tray having a plurality of reticles disposed thereon, each reticle of the plurality of reticles having a different pattern to be projected when the light is directed to each reticle of the plurality of reticles, each reticle pattern corresponding to a different metrology metric, the reticle tray movable such that each of the plurality of reticles is positionable below the first lens; and

a second lens disposed below the reticle tray, the second lens operable to receive the pattern projected from each of the plurality of reticles and operable to project the different pattern to an input coupling grating of the optical device.

8. The measurement system of claim **7**, wherein the light engine is coupled to a rotation stage, the rotation stage operable to rotate or tilt the light engine.

9. The measurement system of claim 7, wherein the plurality of light sources includes a first light source operable to project a first range of wavelengths of 620 nm to 750 nm, a second light source operable to project a second range of wavelengths of 495 nm to 570 nm, and a third light source operable to project a third range of wavelengths of 450 nm to 495 nm.

10. The measurement system of claim 7, further comprising an alignment camera adjacent to the light engine, the alignment camera operable to capture one or more images of one or more alignment markers on the optical device or the optical device substrate.

11. The measurement system of claim 7, wherein the light engine includes a plurality of mirrors, the plurality of mirrors operable to direct the light from the plurality of light sources to the first lens.

12. The measurement system of claim 7, further comprising a reflection detector adjacent to the light engine, the reflection detector positioned to detect the different pattern projected from each of the plurality of reticles.

13. The measurement system of claim 7, further comprising a transmission detector positioned on an opposite side of the stage than the light engine, the transmission detector operable to detect the pattern projected from each of the plurality of reticles.

14. A method, comprising:

projecting a first pattern with a light from a light engine, the light engine having a light source that projects the light at a range of wavelengths to a first reticle of a reticle tray disposed below the light source, the reticle tray having the first pattern that is projected to an optical device, the light engine disposed in a measurement system, the measurement system having:

a stage disposed under the light engine;

a tray disposed on the stage, the tray having the optical device or an optical device substrate having the optical device disposed thereon, the optical device receives the first pattern; and

a reflection detector oriented toward the stage;

detecting one or more images of the first pattern, the image detected when the pattern undergoing total internal reflection through the optical device is outcoupled to the reflection detector;

processing the image to extract a first metrology metric;

projecting a second pattern by projecting light from the light source to a second reticle having the second pattern different than the first pattern to the optical device;

detecting one or more images of the second pattern; and

processing the image to extract a second metrology metric.

15. The method of claim 14, wherein a light width of the light is substantially equal to a width of an input coupling grating of the optical device.

16. The method of claim 14, further comprising rotating or tilting the light engine when projecting the light.

17. The method of claim 14, further comprising utilizing an alignment camera of the measurement system to correct misalignments of the optical device relative to the light engine.

18. The method of claim 14, wherein the first metric and the second metrology metric include one or more of an angular uniformity metric, a contrast metric, a efficiency metric, a color uniformity metric, a modulation transfer function (MTF) metric, a field of view (FOV) metric, a ghost image metric, an eye box metric.

19. The method of claim 14, further comprising repeating the method for subsequent patterns.

* * * * *