US 20120228515A1

(19) **United States**

(12) **Patent Application Publication**

Leavitt et al.

(10) **Pub. No.: US 2012/0228515 A1**

(43) **Pub. Date: Sep. 13, 2012**

(54) **APPARATUS AND METHOD FOR MASKLESS PATTERNED IMPLANTION**

(75) Inventors: **Christopher J. Leavitt**, Gloucester, MA (US); **Ludovic Godet**, Boston, MA (US); **Timothy J. Miller**, Ipswich, MA (US)

(73) Assignee: **VARIAN SEMICONDUCTOR EQUIPMENT ASSOCIATES, INC.**, Gloucester, MA (US)

(21) Appl. No.: **13/046,239**

(22) Filed: **Mar. 11, 2011**

Publication Classification

(51) **Int. Cl.**
H01J 3/14 (2006.01)

(52) **U.S. Cl.** ..... **250/396 R**

(57) **ABSTRACT**

A method of implanting a workpiece in an ion implantation system. The method may include providing an extraction plate adjacent to a plasma chamber containing a plasma, such that the extraction plate extracts ions from the plasma through at least one aperture that provides an ion beam having ions distributed over a range of an angles of incidence on the workpiece. The method may include scanning the workpiece with respect to the extraction plate and varying a power level of the plasma during the scanning from a first power level to a second power level, wherein at a surface of the workpiece, a first beam width at a first power level is greater than a second beam width at a second power level.

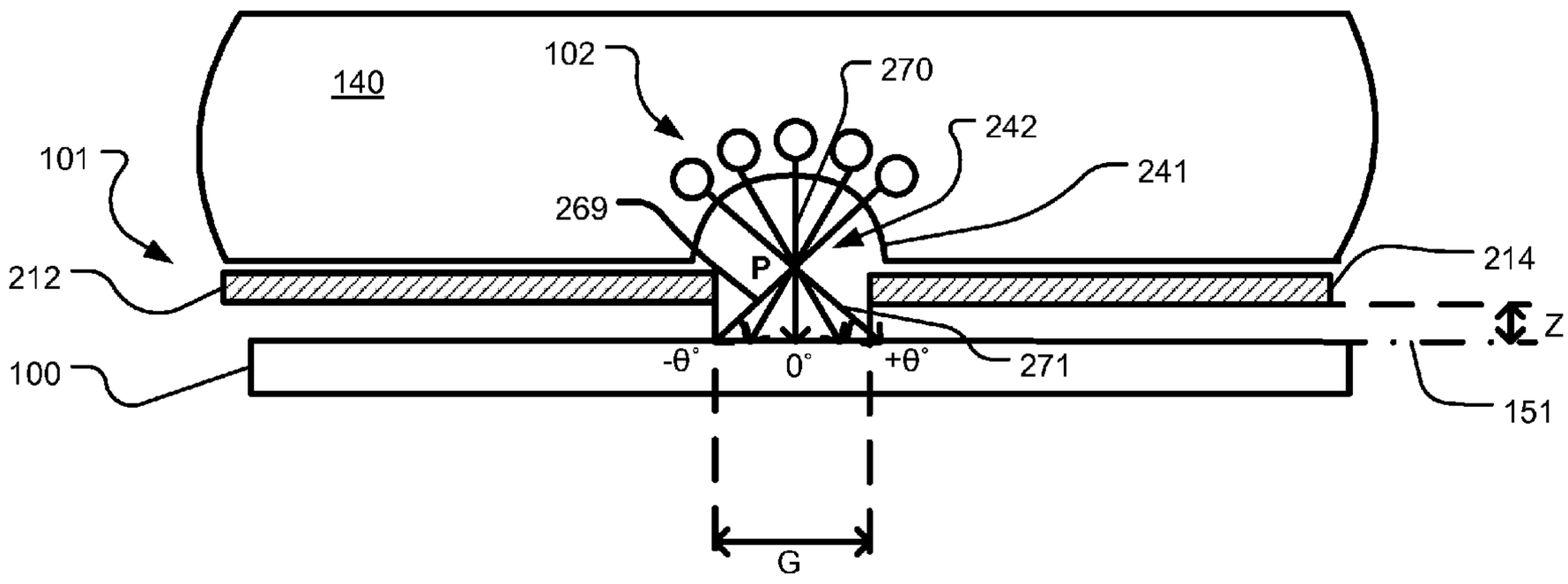

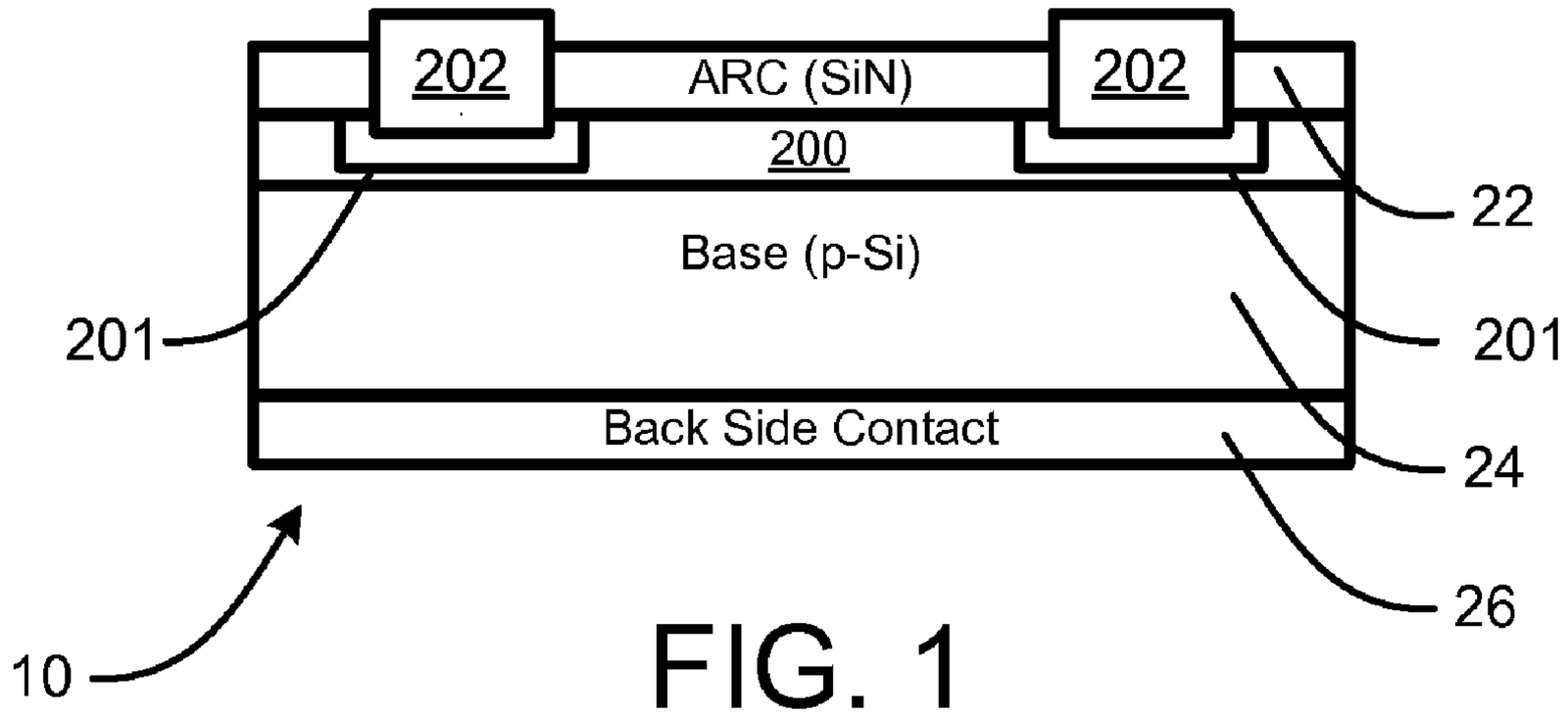
202
ARC (SiN)
202
200
Base (p-Si)
201
22
201
Back Side Contact
24
26
10

FIG. 1

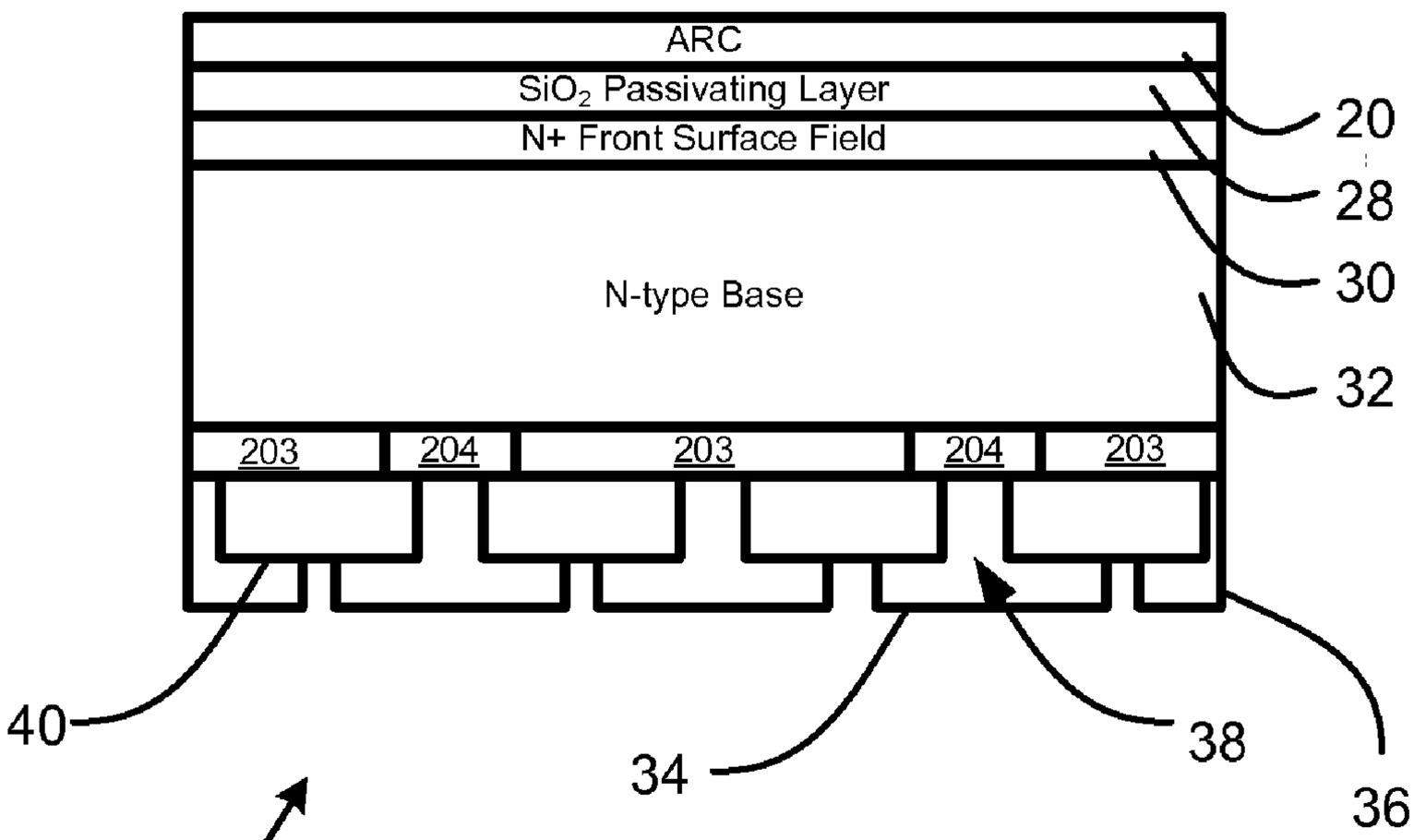
ARC
SiO2 Passivating Layer
N+ Front Surface Field
20
28
N-type Base
30
32
203
204
203
204
203
40
34
38
36
20

FIG. 2

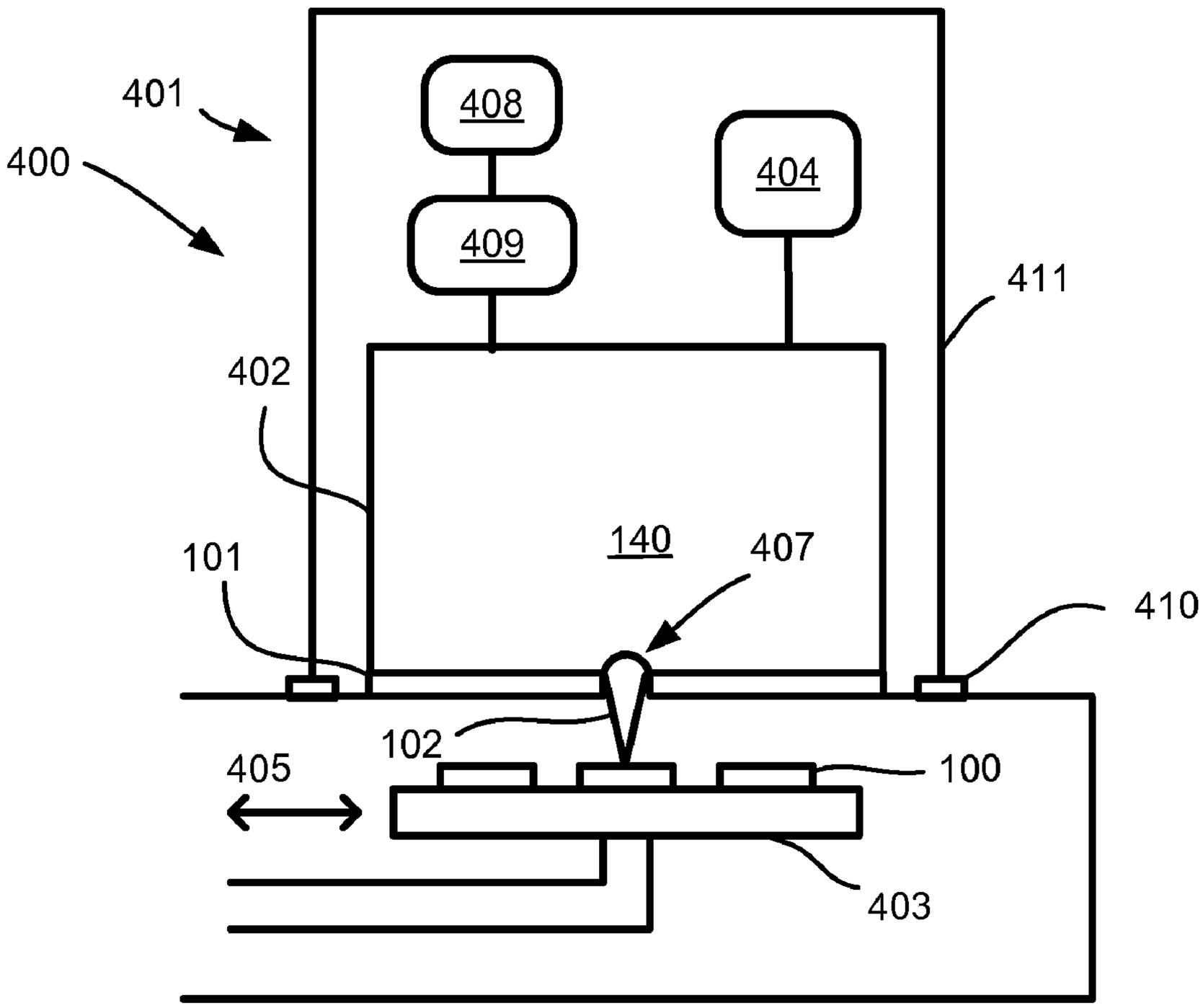

FIG. 3

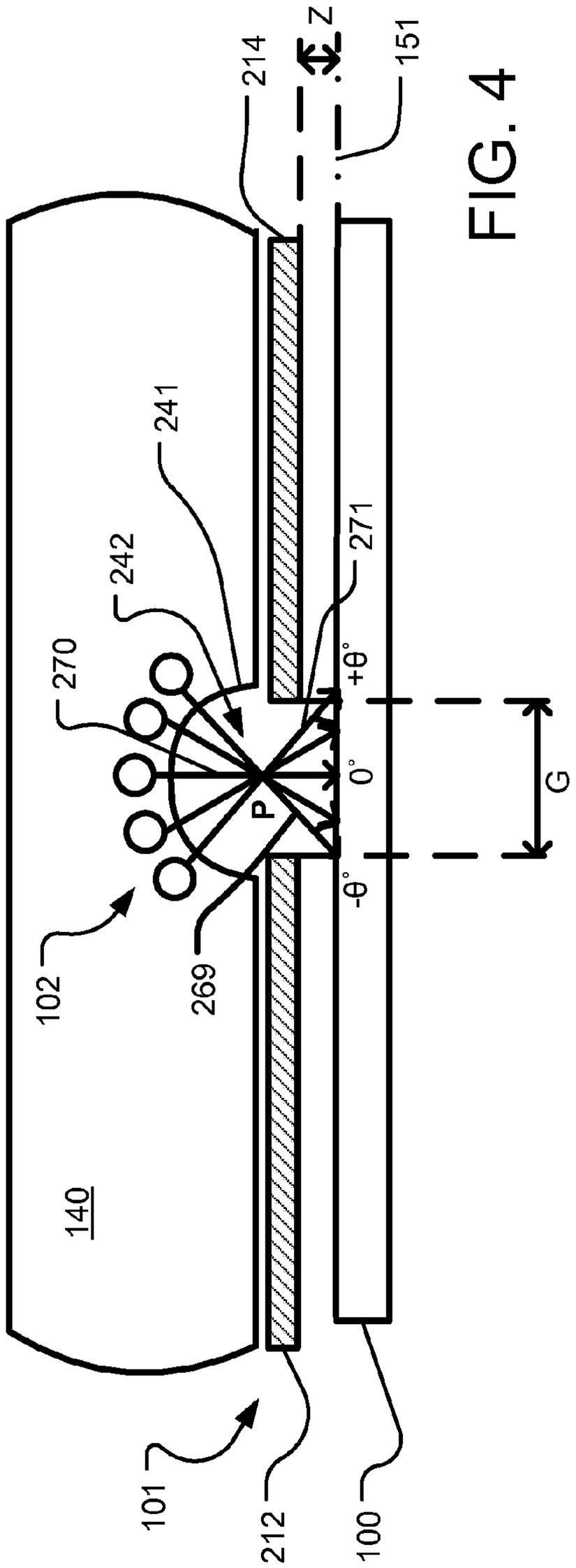
214
Z
151
241
242
270
271
+θ°
0°
-θ°
P
G
102
269
140
101
212
100

FIG. 4

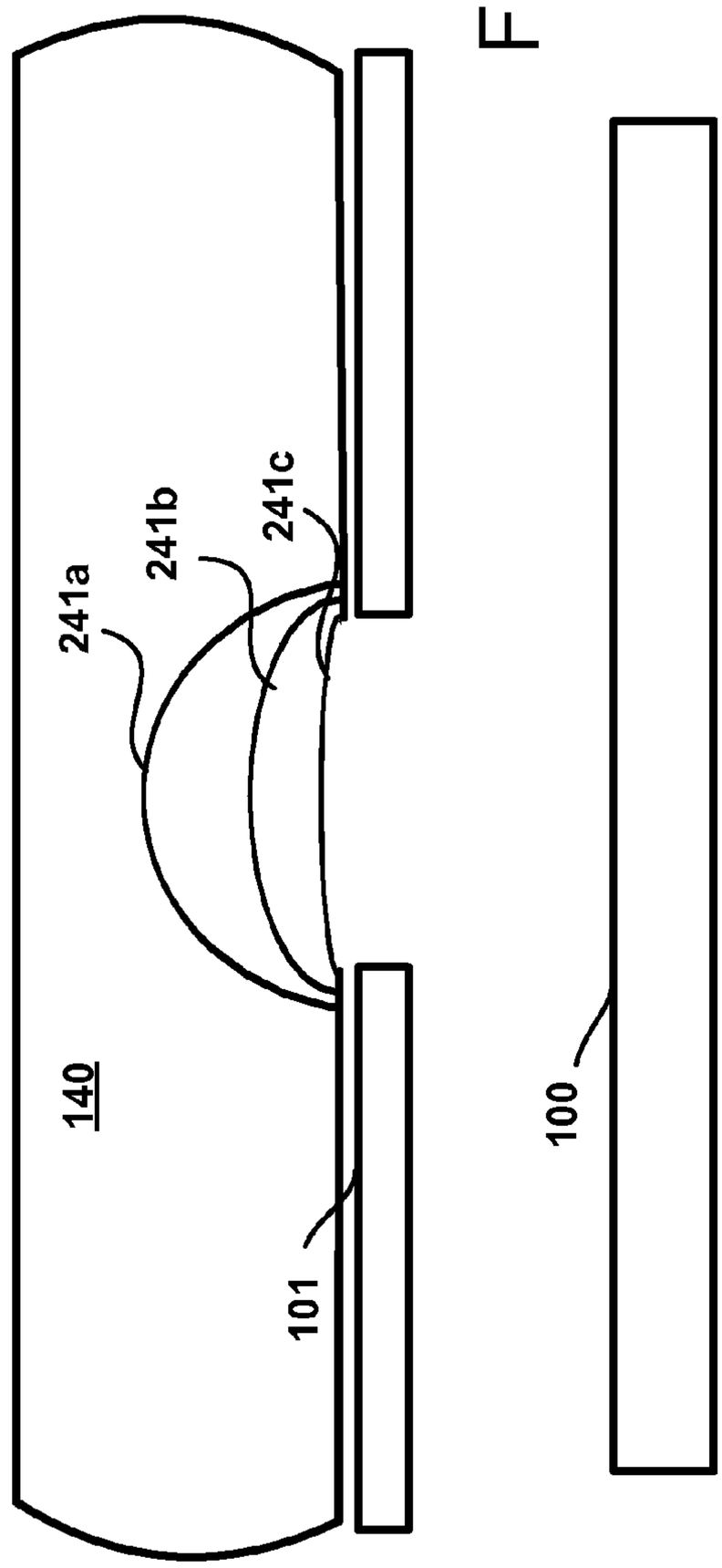
241a
241b
241c
140
101
100

FIG. 5

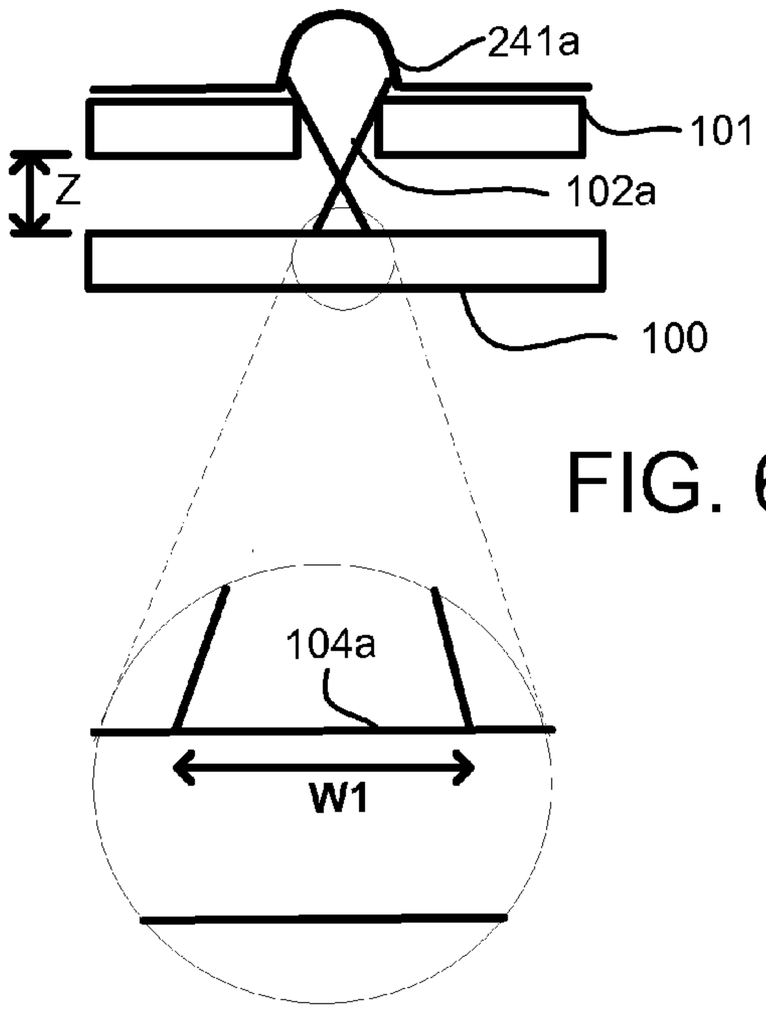

FIG. 6a

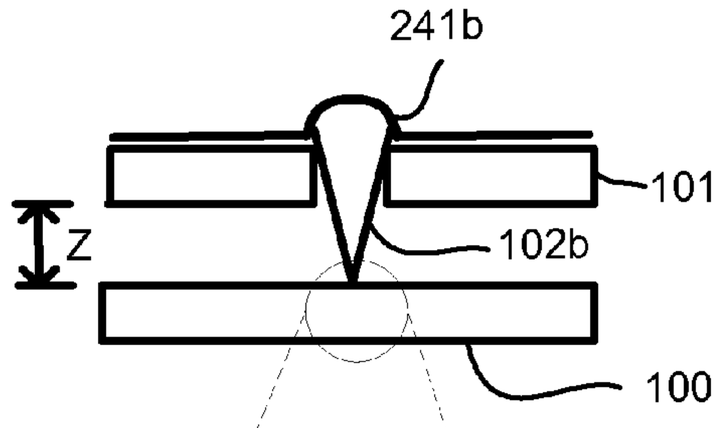

FIG. 6b

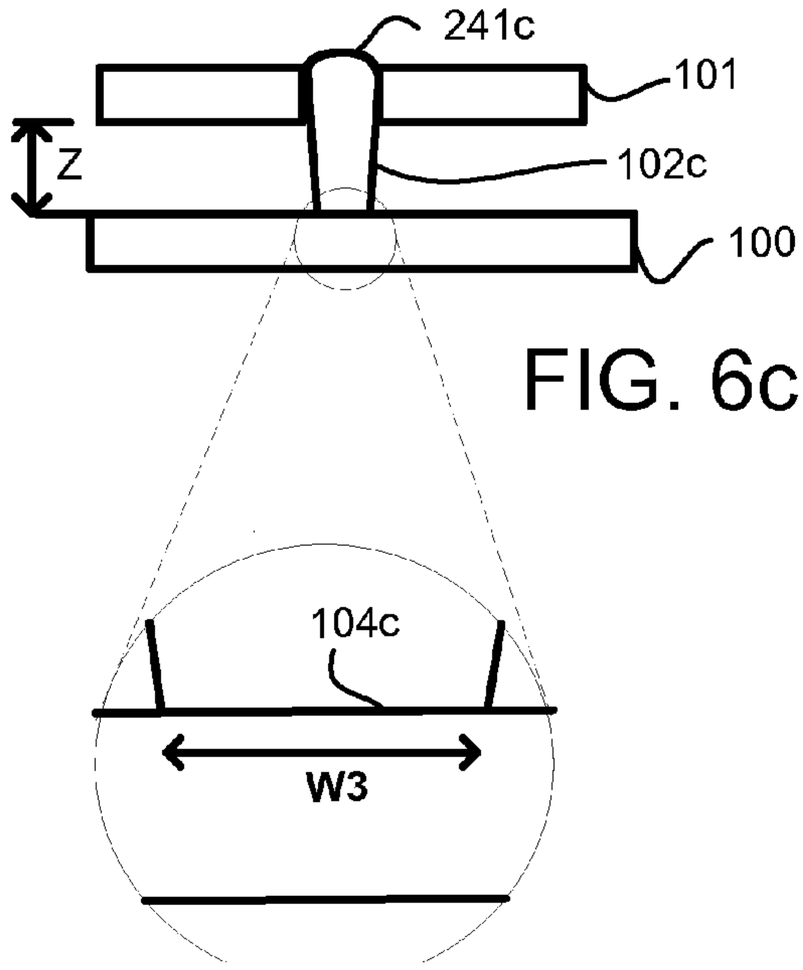

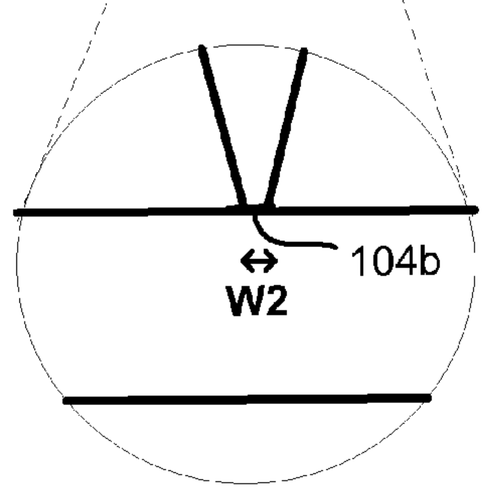

FIG. 6c

FIG. 7a

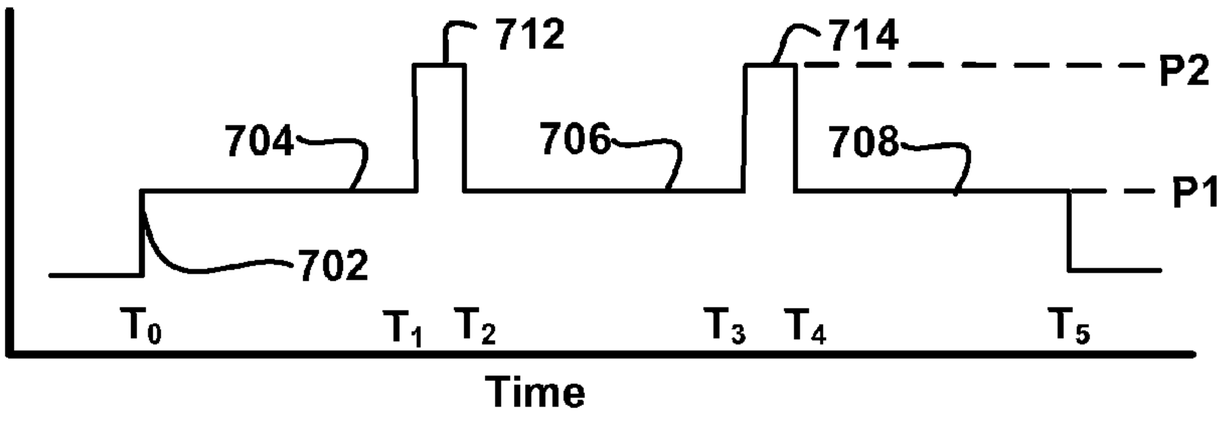

FIG. 7b

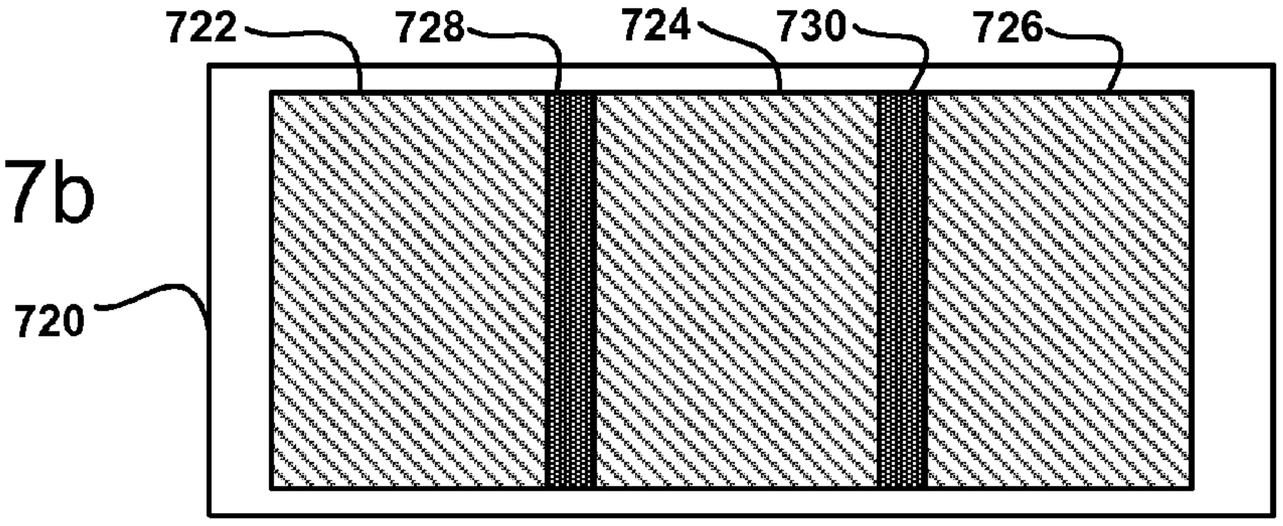

FIG. 8a

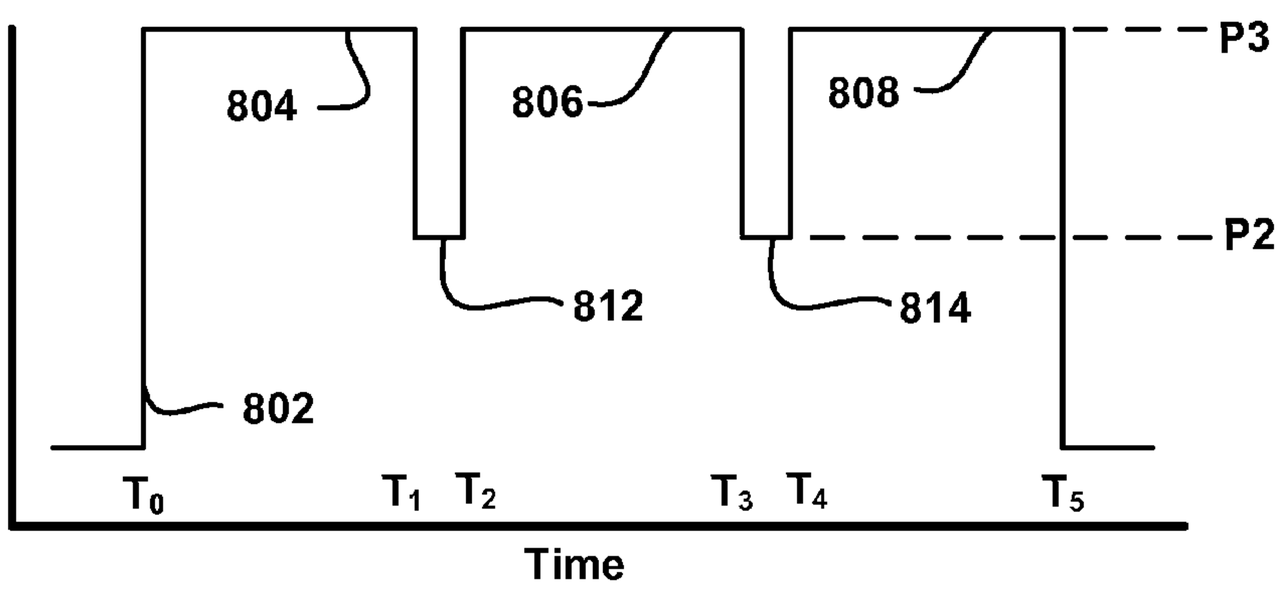

FIG. 8b

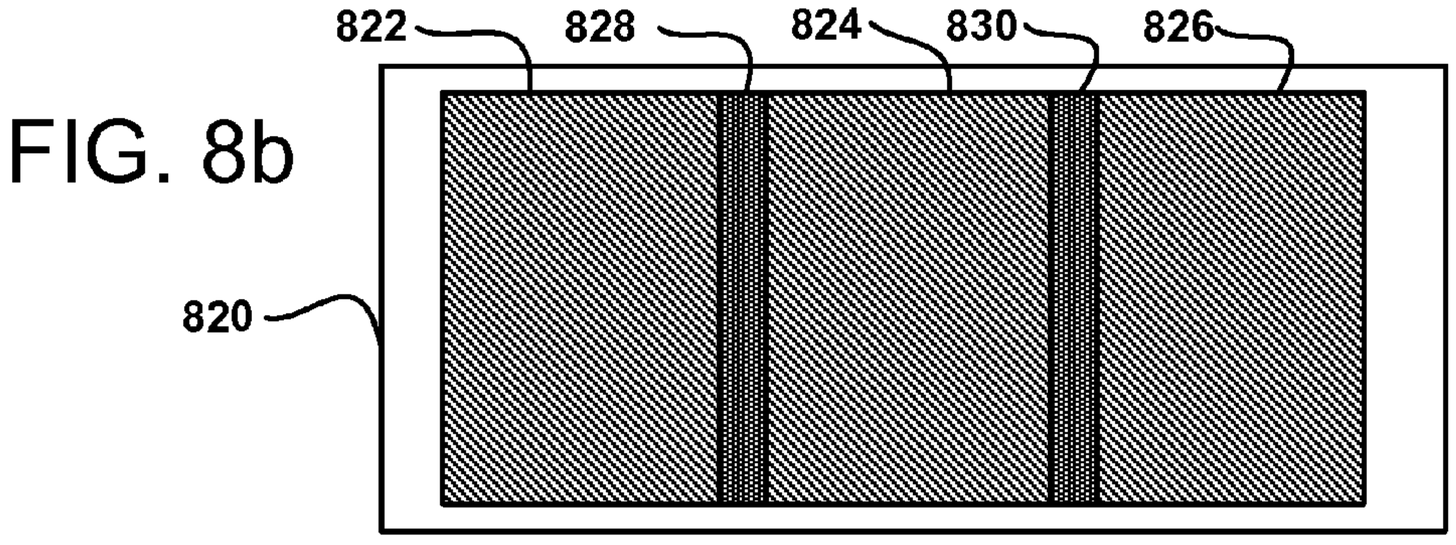

FIG. 9a

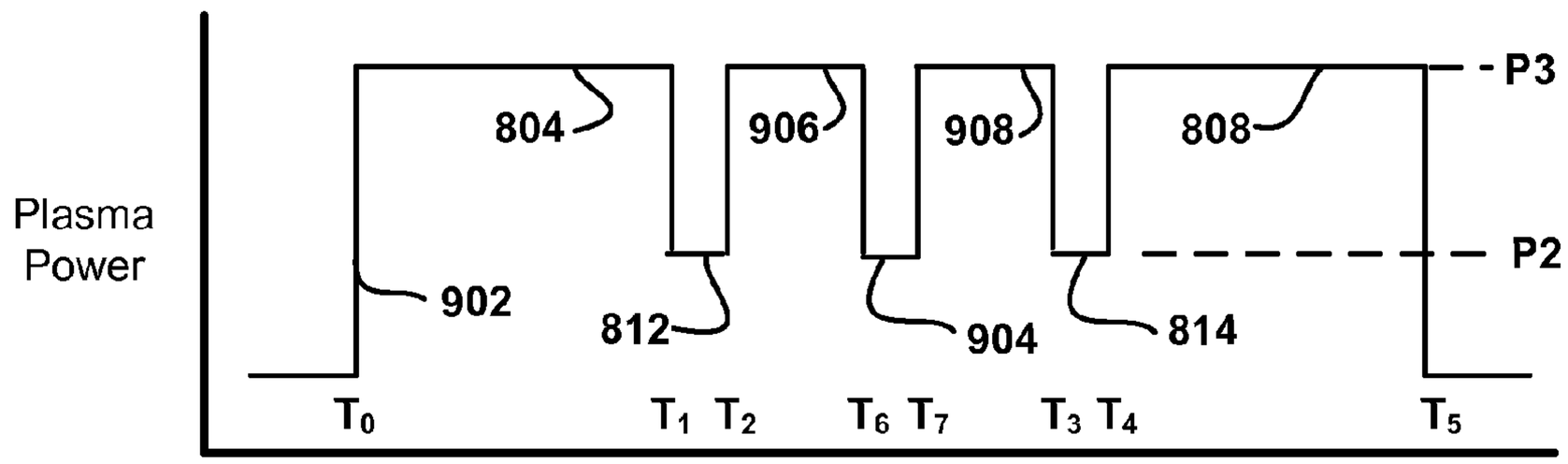

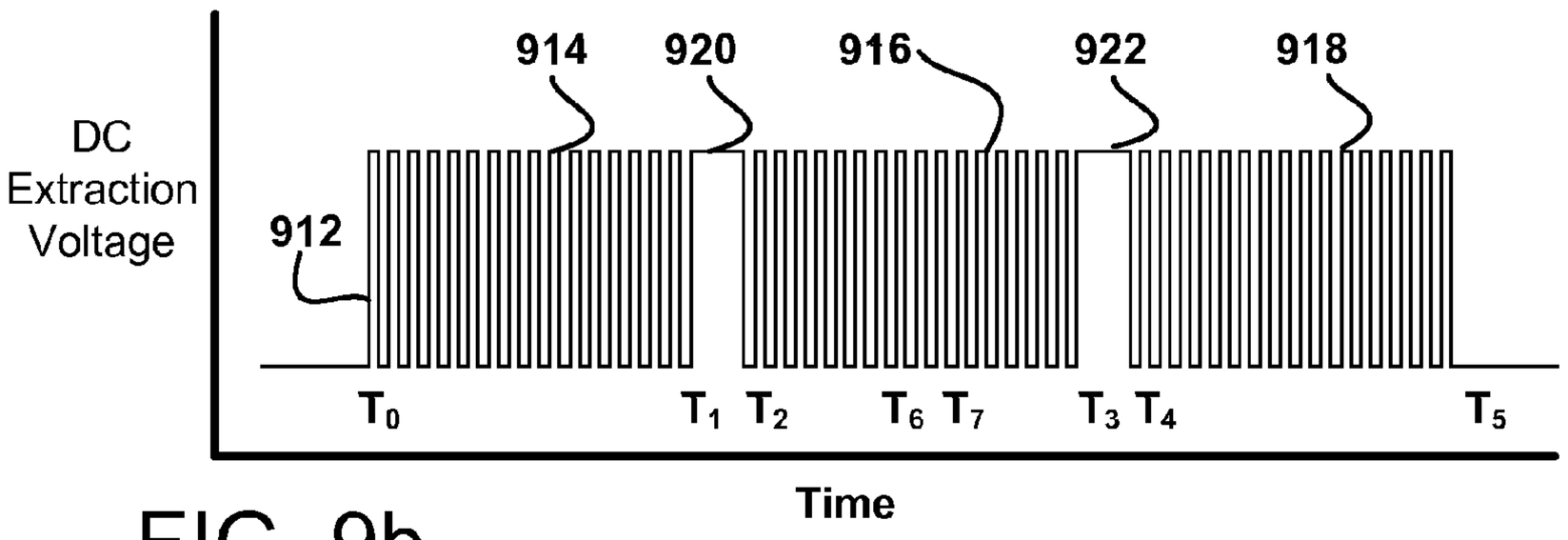

FIG. 9b

FIG. 9c

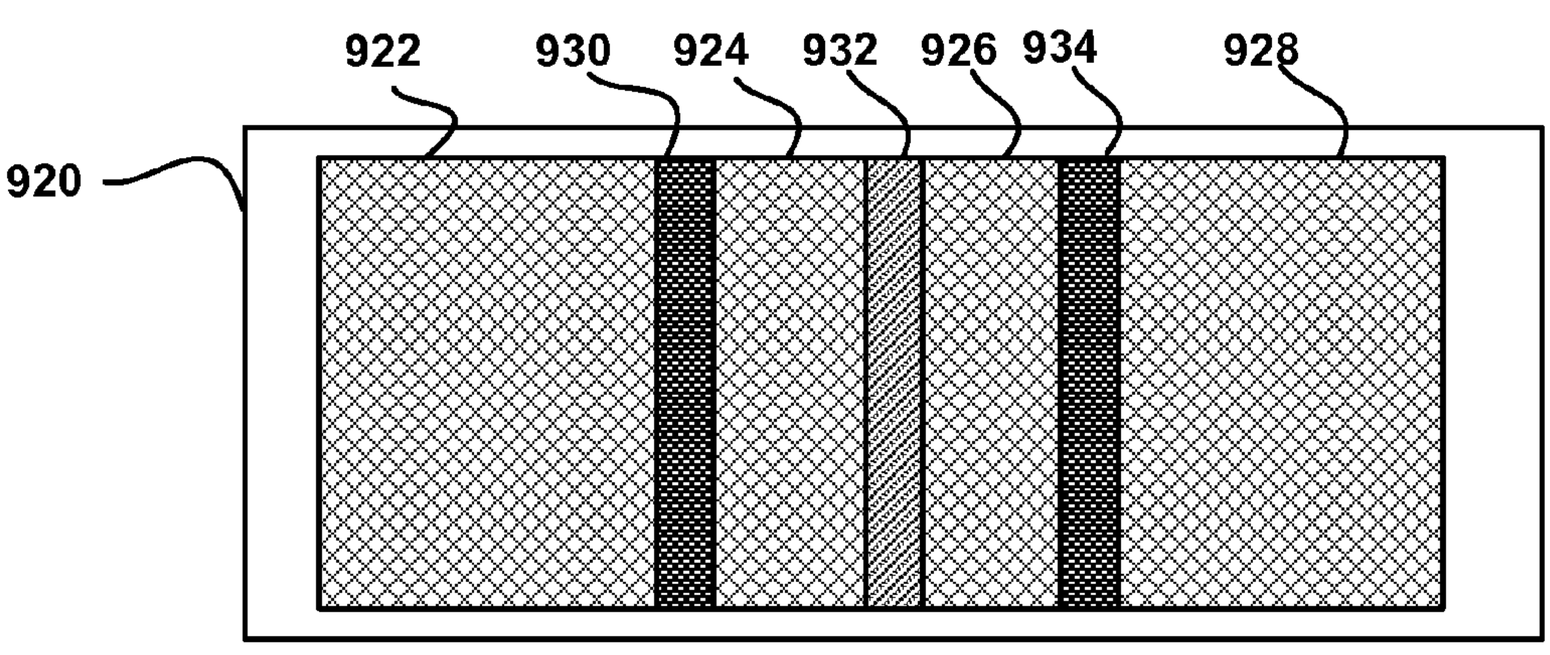

APPARATUS AND METHOD FOR MASKLESS PATTERNED IMPLANTION

FIELD

[0001] This invention relates to the implantation of workpieces and, more particularly, to a method and apparatus for variable implantation of workpieces.

BACKGROUND

[0002] Ion implantation is a standard technique for introducing property-altering impurities into substrates. A desired impurity material is ionized in an ion source, the ions are accelerated to form an ion beam of prescribed energy, and the ion beam is directed at the surface of the substrate. The energetic ions in the beam penetrate into the sub-surface of the substrate material and are embedded into the crystalline lattice of the substrate material to form a region of desired conductivity or material property.

[0003] High dose implantation may allow the lowest cost-of-ownership for an ion implanter. Localized or selective doping or localized or selective material modification may be required for some implants. Fabrication of solar cells presents one example in which high dose implantation and selective doping of local areas is desirable. Doping, which may improve efficiency of solar cells, may be performed using ion implantation. FIG. **1** is a cross-sectional view of a selective emitter solar cell **10**. It may increase efficiency (the percentage of light converted to electrical energy) of a solar cell to dope the emitter **200** and provide additional dopant to the regions **201** under the contacts **202**. More heavily doping the regions **201** improves conductivity and having less doping between the contacts **202** improves charge collection. The contacts **202** may only be spaced approximately 2-3 mm apart. The regions **201** may only be approximately 100-300 μm across. The solar cell **10** may also include an ARC layer **22**, disposed above the emitter **200** and a base layer **24**, as well as backside contact **26**. FIG. **2** is a cross-sectional view of an interdigitated back contact (IBC) solar cell **20**. In the IBC solar cell **20**, the junction is on the back of the solar cell. The solar cell may have an arc layer **20**, passivating layer **28**, and N+ front surface field **30** that form a stack adjacent an N-type base layer **32**. The doping pattern may include alternating p-type and n-type dopant regions in this particular example. The p+ emitter **203** and the n+ back surface field **204** may be doped. This doping may enable the junction in the IBC solar cell to function or have increased efficiency. The p-type contact fingers **34** and n-type contact fingers **36** may be formed in contact through holes **38** formed in passivating layer **40**.

[0004] In manufacturing articles such as solar cells, the use of known patterning processes, such as photolithography, in conjunction with implantation, may be too cost prohibitive for use to perform selective area implantation because of the extra steps required.

[0005] Plasma doping technology is not fully tested for such applications. Direct exposure to neutrals in the plasma may cause deposition or etching of a workpiece and may require additional cleaning steps. Accordingly, there is a need in the art for an improved implantation of workpieces and, more particularly, to an improved method and apparatus for patterned implantation of workpieces without the use of masks.

SUMMARY

[0006] In one embodiment, a method of implanting a workpiece in an ion implantation system comprises providing an extraction plate adjacent to a plasma chamber containing a plasma, wherein the extraction plate is configured to provide an ion beam having ions distributed over a range of angles of incidence on the workpiece. The method include scanning the workpiece with respect to the extraction plate and varying a power level of the plasma during the scanning from a first power level to a second power level, wherein at a surface of the workpiece, a first beam width at a first power level is greater than a second beam width at a second power level.

[0007] In another embodiment, an ion implantation apparatus comprises a plasma source operable to vary plasma power of a plasma in a plasma chamber, wherein the plasma contains ions for implantation into a workpiece. The apparatus also includes an extraction plate having an aperture configured to modify a shape of a plasma sheath proximate the extraction plate, the extraction plate being scannable with respect to the workpiece in at least a first direction. The apparatus further includes a processing chamber containing a workpiece operable to receive a bias with respect to the plasma, wherein the plasma source and the extraction plate are interoperable to vary a width of the ion beam incident of the substrate by varying plasma power.

BRIEF DESCRIPTION OF THE DRAWINGS

[0008] For a better understanding of the present disclosure, reference is made to the accompanying drawings, which are incorporated herein by reference and in which:

[0009] FIG. **1** is a cross-sectional view of a known selective emitter solar cell;

[0010] FIG. **2** is a cross-sectional view of a known interdigitated back contact solar cell;

[0011] FIG. **3** is a block diagram of a plasma processing apparatus consistent with an embodiment of the disclosure;

[0012] FIG. **4** is a cross-sectional view of an exemplary focusing plate arrangement within a plasma system;

[0013] FIG. **5** depicts in a schematic fashion exemplary shapes of a plasma sheath boundary as a function of plasma power;

[0014] FIGS. **6***a-c* depict embodiments showing exemplary ion profiles at different plasma power levels;

[0015] FIGS. **7***a* and **7***b* present an exemplary plasma power curve and a resulting substrate implantation pattern according to one embodiment;

[0016] FIGS. **8***a* and **8***b* present another exemplary plasma power curve and a resulting substrate implantation pattern according to another embodiment;

[0017] FIGS. **9***a*-**9***c* illustrate, respectively, an exemplary plasma power curve, synchronized DC extraction voltage curve, and resulting substrate implantation pattern according to an embodiment.

DETAILED DESCRIPTION

[0018] Embodiments of a system and method are described herein in connection with implantation of workpieces (substrates). In various embodiments, this system can be used with, for example, solar cell substrates, semiconductor substrates, bit-patterned media, solid-state batteries, polymer materials, flat panels, oxide substrates, and substrates comprising insulator material. Thus, the invention is not limited to the specific embodiments described below.

[0019] In various embodiments, an ion implantation system includes a plasma source, a plasma sheath modifier (also referred to as an extraction plate), and a mechanism for scan-

ning the plasma source with respect to a workpiece. In some embodiments, the ion implantation system is operable to vary ion beam properties of an ion beam extracted from the plasma source and provided to the workpiece. In various embodiments, the ion beam properties may be varied in a repetitive fashion while a workpiece is scanned with respect to the ion beam. In some embodiments, the plasma source may be an RF-source whose applied power level (power setpoint) is periodically varied in order to modify the properties of an ion beam extracted through the plasma sheath modifier.

[0020] In various embodiments, a workpiece may be patterned with areas of differing widths and differing levels of implanted species by varying the power set point of an RF-source used to generate a plasma while a workpiece is scanned with respect to an extraction plate (also termed herein "plasma sheath modifier") that extracts an ion beam from the plasma.

[0021] FIG. **3** is a block diagram of a plasma processing apparatus consistent with an embodiment of the disclosure. The system **400** includes a plasma source **401**, an extraction plate **101** (or sheath engineering plate), and a process chamber **402**. A gas source **404** is connected to the plasma source **401**. The plasma source **401** or other components of the system **400** also may be connected to a pump (not shown), such as a turbopump. The plasma source **401** that generates the plasma **140** may be, for example, an RF plasma source, inductively-coupled plasma (ICP) source, indirectly heated cathode (IHC), or other plasma sources known to those skilled in the art. In this particular embodiment, the plasma source **401** is an RF plasma source with an RF source generator **408** and an RF matching network **409**. The plasma source **401** is surrounded by an enclosure **411** and a DC break **410** separates the enclosure **411** from the process chamber **402** in this particular embodiment. The process chamber **402**, plasma source **401**, or platen **403** may be grounded.

[0022] The extraction plate **101** is used to extract ions **102** for implantation into a workpiece **100**. The extraction plate **101** may be cooled or heated. The plasma source **401** may be biased and a bias power supply (not shown) may be provided to provide a continuous or pulsed bias on the substrate with respect to the plasma **140** to attract the ions **406**.

[0023] The extraction plate **101** may have at least one aperture **407**, through which ions **102** are provided to substrate (workpiece) **100**. The extraction plate **101** may be cooled or otherwise have its thermal characteristics controlled. The pressure in the plasma source **401** and the process chamber **402** may be approximately equal, which may cause arcing.

[0024] One or more workpieces **100**, which may be solar cells or other devices, may be arranged on a platen **403** in the process chamber **402**. The distance between the extraction plate **101** and the workpieces **100** may be controlled to compensate for any thermal expansion of the extraction plate **101**. Workpieces **100** may be arranged in an array or matrix that is N workpieces **100** wide and N workpieces **100** long (where the "N" variable in the width dimension can be different from that in the length dimension). In FIG. **3**, a matrix of 1×3 workpieces is illustrated. The platen **403** may use electrostatic clamping, mechanical clamping, or a combination of electrostatic and mechanical clamping to retain the workpieces **100**. The workpieces **100** may be scanned using the platen **403**. In the embodiment of FIG. **3**, the platen **403** can scan in the direction **405**. The platen **403**, however, may perform either 1D or 2D scanning depending on the desired implant pattern on the workpieces **100**. For example, 2D scanning may be performed to create spot-shaped or dot-shaped implant regions in the workpieces **100**. In an alternate embodiment, the extraction plate **101** scans with respect to stationary workpieces **100**. The platen **403** may be configured to provide backside gas cooling to the workpieces **100** in one instance. The workpiece **100** may be heated or cooled to various temperatures before or during implantation using the platen **403** or some other apparatus.

[0025] As detailed further below, in various embodiments, during scanning of the extraction plate **101** and/or the workpieces **100** with respect to one another, changes in power of the plasma source **401** and/or pulsing of bias voltage between plasma **140** and substrate **100** may be performed to achieve the desired dose and distribution of ions across the workpieces **100**. In some embodiments, the pulsing of bias voltage may be coupled with variations in plasma power setpoints to produce a desired implantation pattern in a substrate.

[0026] As suggested by FIG. **3**, ions **102** extracted through extraction plate **101** may impinge on workpiece **100** over a range of angles in which the ion beam as a whole may focus to a smaller width than the aperture **407** from which the beam **102** is extracted. In accordance with various embodiments, the focusing of ions **102** may be controlled to vary implantation conditions at workpiece **100**. In particular, the power in plasma source **401** may be varied to alter the size of a beam of ions **102** when it impacts workpiece **100**.

[0027] FIG. **4** is a cross-sectional view of details of an extraction plate arrangement within a plasma system in accordance with one embodiment. The extraction plate **101** is configured to modify an electric field within the plasma sheath **242** to control a shape of a boundary **241** between plasma **140** and the plasma sheath **242**. Accordingly, ions **102** that are attracted from the plasma **140** across the plasma sheath **242** may strike the workpiece **100** at a large range of incident angles.

[0028] The plasma **140** may be generated as described above with respect to FIG. **3**. Extraction plate **101** may be a unitary plate having a slot or may be a pair of panels **212** and **214** defining a gap there between having a horizontal spacing (G). The panels **212** may be an insulator, semiconductor, or conductor. In various embodiments, the extraction plate **101** may include a multiplicity of gaps (not shown). Plate **101** may be positioned at a vertical spacing (Z) above the plane **151** defined by the front surface of the workpiece **100**.

[0029] Ions **102** may be attracted from the plasma **140** across the plasma sheath **242** by different mechanisms. In one instance, the workpiece **100** is biased to attract ions **102** from the plasma **140** across the plasma sheath **242**. The ions **102** may be a p-type dopant, an n-type dopant, hydrogen, a noble gas, or other species known to those skilled in the art.

[0030] Advantageously, the extraction plate **101** modifies the electric field within the plasma sheath **242** to control a shape of the boundary **241** between the plasma **140** and the plasma sheath **242**. The boundary **241** between the plasma **140** and the plasma sheath **242** may have a convex shape relative to the plane **151** in one instance. When the workpiece **100** is biased, for example, the ions **102** are attracted across the plasma sheath **242** through the gap between the panels **212** and **214** at a large range of incident angles. For instance, ions following trajectory path **271** may strike the workpiece **100** at an angle of +e° relative to the plane **151**. Ions following trajectory path **270** may strike the workpiece **100** at about an angle of 0° relative to the same plane **151**. Ions following trajectory path **269** may strike the workpiece **100** at an angle

of −θ° relative to the plane **151**. Accordingly, the range of incident angles may be between +θ° and −θ° centered about 0°. In addition, some ion trajectories such as paths **269** and **271** may cross each other. Depending on a number of factors including, but not limited to, the horizontal spacing (G) between the panels **212** and **214**, the vertical spacing (Z) of the panels **212** and **214** above the plane **151**, the dielectric constant of the panels **212** and **214**, or other process parameters of the plasma **140**, the range of incident angles (θ) may be between +60° and −60° centered about 0°.

[0031] In the example depicted in FIG. **4**, ions extracted through extraction plate **101** may converge, cross paths with one another, and diverge from one another before impinging on workpiece **100**. Although ions in FIG. **4** are depicted as passing through a focal point P, in some embodiments ions provided from an extraction plate need not define an exact focal point. However, in accordance with various embodiments, an extraction plate such as extraction plate **101**, provides a beam of ions that generally converges. Referring again to FIG. **3**, in accordance with some embodiments, and depending upon selected parameters of the plasma system **400**, the ion beam may exhibit regions of convergence and/or divergence before impinging on a substrate. In particular, various embodiments control this ion beam convergence/divergence, which is also referred to herein as ion beam "focusing" or "focus," by controlling the power level (power set point) of the plasma in plasma system **400**. In turn, by varying the focus of the ion beam while scanning a workpiece **100** with respect to the extraction plate **101**, the ion implantation level and implantation width corresponding to different implantation levels in workpiece **100** may be varied across different areas of the workpiece.

[0032] FIG. **5** depicts in a schematic fashion exemplary shapes of a plasma sheath boundary **241** as a function of plasma power. For example, curves **241***a*, **241***b*, and **241***c* may represent a boundary at low, intermediate, and high RF-power in plasma **140**, respectively. As power decreases, the boundary **241** develops stronger curvature and extends further towards chamber **402** into a region above extraction plate **101**. This change in position and curvature of boundary **241** may act to change the overall distribution of angles of ions accelerated from boundary **241** toward workpiece **100**.

[0033] FIGS. **6***a-c* depict respective exemplary ion profiles **102***a-c* at different plasma power levels for ions accelerated from a plasma **140** through an extraction plate **101** in accordance with embodiments of the disclosure. As illustrated, the ion profiles **102***a*, **102***b*, and **102***c*, may result from plasma sheath boundaries **241***a*, **241***b*, **241***c*, which correspond to the low, intermediate and high plasma power levels discussed above with respect to FIG. **5**. In the low plasma power arrangement, the ions **102***a* converge to a focal point above the substrate **100** and diverge before striking the substrate. An implanted region **104***a* is formed having a width W**1** at substrate **100**. In the intermediate power level arrangement depicted at FIG. **6***b*, the convergence of ions in ion profile **102***b* is more gradual than at lower power, such that the "focus plane" (not separately shown) of the ions is about at the level of substrate **100**. In this manner, the implanted region **104***b* defined by ions **102***b* is much narrower, having a width W**2**. Finally, at the higher power arrangement, the convergence angle of ions **102***c* is still less, resulting in an implanted region **102***c* that has a width W**3** that is much larger than W**2**.

[0034] In one example, the power levels of plasma **140** may be arranged such that the implanted width W**1** and W**3** are equal. Thus, by varying the plasma power in a monotonic fashion from a low power level to a high power level, the focal plane of ions extracted from the plasma may be varied from an overfocused condition, to a focused condition, to an underfocused condition with respect to the plane of substrate **100**. In one set of examples, a 0.5 kW plasma may be arranged in conjunction with an extraction plate having an aperture width on the order of 1 mm to produce an overfocused ion beam producing an implant width of about 1 mm at a substrate; a 2.2 kW plasma may be arranged to produce a focused beam having an implant width of about 0.1 mm; and a 5 kW plasma may be arranged to produce an underfocused beam having an implant width of about 1 mm.

[0035] This ability to vary the implant width at a substrate by changing plasma power affords the ability to conveniently populate a substrate with regions having different levels of ion implantation and different widths by changing the plasma power while scanning the substrate. In the example above, a 0.5 kW plasma may be used to produce, for example, a blanket or background level of implantation of a dopant species over a substrate using a 1 mm wide beam to scan over wide areas of the substrate. A 2.2 kW plasma may be used to produce selective areas having higher dopant concentration since the ion flux extracted from the 2.2 kW plasma through extraction plate **101** may be substantially higher than that extracted from a 0.5 kW plasma. Moreover, the 2.2 kW setpoint may be convenient for populating narrow stripes of high dopant concentration on the substrate, since the beam width may be about 0.1 mm. Thus, during an implantation process, the substrate **100** may be continuously scanned with respect to extraction plate **101**, while the plasma power is varied. This procedure may create one or more narrow substrate regions of relatively higher implantation levels and one or more wider substrate regions having relatively lower implantation levels.

[0036] FIGS. **7***a* and **7***b* present an exemplary plasma power curve and a resulting substrate implantation pattern according to one embodiment. In this embodiment, plasma power curve **702** represents applied plasma power as a function of time. At an initial time, T_0 the plasma may be initiated by applying a power level P**1**. The power level P**1** is maintained until T_1, when power is increased to a level P**2** for a period of time till T_2, after which the power level is reduced to P**1**. The power level is again increased to P**2** between T_3 and T_4, after which power is maintained at level P**1** until being extinguished at T_5. In some embodiments, a substrate may be scanned with respect to an extraction plate at a constant velocity when power curve **702** is applied to a plasma adjacent the extraction plate. Accordingly, the abscissa, which depicts time in FIG. **7***a*, may also be directly proportional to linear position along a substrate that receives ions extracted from an aperture of the extraction plate.

[0037] FIG. **7***b* depicts implantation areas in a workpiece **720** after scanning under an extraction plate while plasma curve **702** is applied. The periods **704**, **706**, and **708** during which power is maintained at P**1**, correspond to a first level of ion implantation forming respective wide areas **722**, **724**, and **726**. The periods **712**, **714**, during which power is at increased level P**2**, correspond to a second level of ion implantation forming respective areas **728**, **730**.

[0038] FIGS. **8***a* and **8***b* present another exemplary plasma power curve **802** and a resulting substrate implantation pattern according to another embodiment. At an initial time T_0 the plasma may be initiated by applying a power level P**3**. The power level P**3** is maintained until T_1, when power is

decreased to a level P2 for a period of time until T_2, after which the power level is increased to P3. The power level is again decreased to P2 between T_3 and T_4, after which power is maintained at level P3 until being extinguished at T_5.

[0039] As illustrated in FIG. **8***b*, the periods **804**, **806**, and **808** during which power is maintained at P3, correspond to a third level of ion implantation forming respective areas **822**, **824**, and **826** of workpiece **820**. The periods **810**, **812**, in which power is decreased to P2, may correspond to a level of ion implantation similar to that in regions **728**, **730**, thereby forming respective areas **828**, **830**.

[0040] In various embodiments of plasma power curves **702**, **802** of FIGS. **7***a* and **8***a*, the power level P2 may correspond to a power in which an extraction plate produces an ion beam having a smaller beam width (and therefore having a smaller implantation width in the workpiece) than at power levels P1 or P3. In some embodiments, the power level P2 may produce an ion beam whose focus plane (that is, the plane in which the beam width is a minimum) is coincident with the substrate plane. Accordingly, whenever a plasma power set point corresponding to P2 is sent to the power source, a minimum beam width may be produced at the substrate.

[0041] Thus, using a plasma power set point corresponding to P2 provides the ability to both selectively change the implantation level in areas **728**, **730** and **828**, **830** and to decrease the minimum size of an area that can be patterned by the selective ion implantation. In the example of plasma power curve **702**, the larger areas **722-726** are patterned using a lower power level P1, which creates a wider, unfocused beam at the workpiece that may result in more uniform implantation. In the example of plasma power curve **802**, the larger areas **822-826** are patterned using a higher power level P3, which may also produce a wider, unfocused beam at the workpiece. In the latter case, however, the level of ion implantation in the larger areas **822-826** may be higher as compared to areas **722-726**, due to the greater plasma power.

[0042] Accordingly, the present embodiments provide a system and method to conveniently pattern a workpiece with multiple areas of differing implantation levels. The multiple areas may be produced in a single continuous scan of a workpiece without the need for masking. Relatively narrower implantation areas may be interspersed between wider, relatively uniform implantation areas by either increasing or decreasing plasma power, depending on the desired power level to be used for implanting the wide areas and the power level corresponding to a focused beam.

[0043] In various embodiments, a continuous DC bias may be applied between a workpiece and plasma while the workpiece is scanned with respect to an extraction plate and while the power level to the plasma is simultaneously varied between different power setpoints during the scanning. By using continuous DC bias, the uniformity of implanted areas may be improved. However, in some embodiments, pulsed DC biasing between workpiece and plasma may be used.

[0044] Although in some embodiments, pulsed DC biasing between substrate and plasma may be performed without synchronization with variation in plasma power setpoints, in other embodiments, one or more aspects of the pulsed DC biasing may be synchronized with one or more aspects of a plasma power recipe. In some embodiments, DC pulses may be synchronized with changes in power levels of the plasma, wherein a transition between a first and second power level in the plasma takes place during an off period of the pulsed DC voltage. This has the effect of preventing ion implantation during a transition between different beam sizes and power levels, during which time the plasma is changing.

[0045] In other embodiments, the DC pulsing protocol may be adjusted according to the plasma power setpoint. FIG. **9***a* illustrates an exemplary plasma power curve which embodies a recipe for periodically changing the power between two setpoints. FIG. **9***b* depicts an exemplary DC extraction voltage curve that may be synchronized in time with the plasma power curve, and FIG. **9***c* shows a resulting substrate implantation pattern that may be produced according to the synchronization of plasma power and DC extraction voltage depicted in FIGS. **9***a* and **9***b*. Plasma power curve **902** is similar to curve **802**, except that an extra period **904** is added in which power is lowered to level P2, resulting in period **806** being sub-divided into high plasma power periods **906** and **908**. FIG. **9***b* depicts an extraction voltage curve **912** in which DC voltage between plasma and substrate is applied in a series of pulses or groups of pulses **914-922**. The voltage may be pulsed between a fixed voltage and zero voltage. For example, if a 30 keV ion implantation energy is desired, the voltage of curve **912** may be pulsed between an off state of 0 V and on state of 30 kV. The voltage pulse period may be in the kilohertz range or greater. Thus, during a scan of a 100 cm long workpiece at a velocity on the order of 1 cm/sec, many thousands of pulses may take place.

[0046] As depicted in FIGS. **9***a* and **9***b*, the high plasma power setpoint periods (P3) **804**, **906**, **908**, and **808** are synchronized with periods of narrow voltage pulses **914**, **916**, and **918**, in which the "on" period (which may represent 30 kV substrate bias) may be microseconds up to hundreds of microseconds. The duty cycle of such pulses may be any convenient value according to a desired implantation level, such as 5%, 10%, or 50%. In addition, periods **812** and **814** in which the plasma power setpoint P2 is lower, are synchronized with respective DC extraction voltage pulses **920** and **922**. The voltage "pulses" **920** and **922** may actually represent continuously applied extraction voltage (for example, 30 kV) during the entire low plasma power (P2) periods between T_1 and T_2 and between T_3 and T_4. Following the example of a 1 cm/sec scan rate, if lower power set point P2 produces a 0.1 mm beam and the intended implantation width is 0.2 mm, the width of "pulses" **920** and **922** may be about 20 msec, while the width of pulses **914-918** may be on the order of 10-100 μsec.

[0047] The synchronization of DC extraction voltage and plasma power levels illustrated in FIGS. **9***a* and **9***b* may facilitate better control of ion dose in the high plasma power and low plasma power regions. For example, as discussed above, the use of power level P3 may produce a beam having a larger beam width suitable for large area patterning. The use of a larger beam width may reduce the tendency for "striping" that may occur when narrower beams are pulsed on and off. In addition, the exact implant dose in the larger areas may be conveniently adjusted by adjusting upwardly or downwardly the duty cycle of pulses **914**, **916**, **918**. Moreover, by providing a continuous extraction voltage (the aforementioned "pulses" **920** and **922**) in short periods **812**, **814** where the plasma power level is at P2, a relatively higher dose of ions may be implanted during the shorter periods. As noted above, the beam width corresponding to power level P2 may be on the order of 0.1 mm, allowing narrow implant regions to be formed. By providing a higher duty cycle (that is, 100% in the example shown) of DC extraction voltage for the narrow

periods **812** and **814**, a higher implant dose may result, even though the overall plasma power is lower than for periods **804** and **808**, for example.

[0048] FIG. **9***c* illustrates one embodiment of a substrate that may result from the exemplary plasma power and DC extraction recipes **902** and **912**, respectively. Substrate **920** contains several wide regions **922**, **924**, **926**, and **928** corresponding to high plasma power levels P**3** that are mutually separated by narrow regions **930**, **932**, and **934**. In the example shown, narrow regions **930** and **934** are similar to one another, and may contain relatively higher implant levels resulting from the fact that a continuous DC extraction voltage is applied between respective periods T_4-T_2 and T_3-T_4. On the other hand, narrow region **932**, corresponding to lower plasma power period between T_6 and T_7, may have a lower implant level, due to the fact that the pulsed DC voltage (with less than 100% duty cycle) is applied during the entire period between T_6 and T_7.

[0049] In some embodiments, workpieces such as workpieces **720**, **820**, **920**, may be implanted solar cells. By controlling plasma power and DC extraction voltage pulsing, the width and dose in selectively implanted areas of a solar cell can be tailored using a continuous scan process. As compared to processes employing physical masks and/or lithography steps to form patterned implantation, the present embodiments provide a simpler and more efficient manner of doping solar cells or other substrates requiring areas of different implantation levels including narrow widths. In particular, one or more narrow implant regions using a narrow ion beam width may be populated between wider implant regions using a wider implant beam width during a single scan at a constant scan rate in which the implantation levels of narrow and wide implant regions may be each be adjusted by adjusting pulsed biasing of the substrate. None of the aforementioned embodiments require mechanical adjustments such as changing physical aperture sizes, changing scan rates, separation distance between extraction plate and substrate, or other mechanical adjustments that may be cumbersome and decrease reliability.

[0050] The methods described herein may be automated by, for example, tangibly embodying a program of instructions upon a computer readable storage media capable of being read by machine capable of executing the instructions. A general purpose computer is one example of such a machine. A non-limiting exemplary list of appropriate storage media well known in the art includes such devices as a readable or writeable CD, flash memory chips (e.g., thumb drives), various magnetic storage media, and the like.

[0051] In particular, steps for varying the plasma power setpoint and the steps for varying the DC extraction voltage may be performed at least partially by a combination of an electronic processor, computer readable memory, and/or computer readable program. The computer memory may be further configured to receive, display and store process history information associated with operation of a plasma system and as exemplified by the stored voltage values.

[0052] The present disclosure is not to be limited in scope by the specific embodiments described herein. Indeed, other various embodiments of and modifications to the present disclosure, in addition to those described herein, will be apparent to those of ordinary skill in the art from the foregoing description and accompanying drawings. In particular, embodiments in which the plasma power is varied between more than two setpoints corresponding to more than two different power levels are possible. Moreover, embodiments in which the plasma power is pulsed rather than continuous are also possible. In addition, embodiments are contemplated in which changes in scan rates are combined with changes in any of the aforementioned parameters, such as substrate pulsed biasing and plasma power setpoint changes.

[0053] Thus, such other embodiments and modifications are intended to fall within the scope of the present disclosure. Furthermore, although the present disclosure has been described herein in the context of a particular implementation in a particular environment for a particular purpose, those of ordinary skill in the art will recognize that its usefulness is not limited thereto and that the present disclosure may be beneficially implemented in any number of environments for any number of purposes. Thus, the claims set forth below should be construed in view of the full breadth and spirit of the present disclosure as described herein.

What is claimed is:

1. A method of implanting a workpiece in an ion implantation system, comprising:

providing an extraction plate adjacent to a plasma chamber containing a plasma, the extraction plate configured to provide an ion beam having ions distributed over a range of angles of incidence on the workpiece;

scanning the workpiece with respect to the extraction plate; and

varying a power level of the plasma during the scanning from a first power level to a second power level, wherein at a surface of the workpiece, a first beam width at a first power level is greater than a second beam width at a second power level.

2. The method of claim **1**, wherein the varying the power level creates a plurality of implanted regions in the workpiece, at least one region of the plurality of regions having a different ion implantation level than another region in the workpiece.

3. The method of claim **1**, comprising applying the first power level for a first duration corresponding to a first implanted region width and applying the power level for a second duration corresponding to a second implanted region width.

4. The method of claim **3**, comprising periodically alternating the power of the plasma between the first power level a multiplicity of times.

5. The method of claim **1**, the first power level being higher than the second power level.

6. The method of claim **1**, the first power level being less than the second power level.

7. The method of claim **1**, comprising varying a power level of the plasma during the scanning to a third power level, wherein at a surface of the workpiece, a third beam width at the third power level is different from the first and the second beam widths.

8. The method of claim **1**, wherein a DC voltage is applied as DC pulses between the plasma and workpiece, the DC voltage comprising on and off periods, wherein no DC voltage is applied between the plasma and workpiece during the off periods.

9. The method of claim **8**, comprising synchronizing the applied DC voltage with changes in power levels of the plasma, wherein a transition between the first and second power levels takes place during an off period of the pulsed DC voltage.

10. The method of claim **8**, comprising applying a first duty cycle during the DC pulses during at least one period when the first power level of the plasma is applied and applying a second duty cycle of the DC pulses during at least one period when the second power level of the plasma is applied.

11. The method of claim **10**, comprising:

setting a first pulse width for the on period of the first duty cycle; and

setting a second pulse width for the on period of the second duty cycle.

12. The method of claim **10**, wherein the first and second duty cycle are different.

13. An ion implantation apparatus, comprising:

a plasma source operable to vary plasma power of a plasma in a plasma chamber, the plasma containing ions for implantation into a workpiece;

an extraction plate having an aperture configured to modify a shape of a plasma sheath proximate the extraction plate, the extraction plate being scannable with respect to the workpiece in at least a first direction; and

a processing chamber containing a workpiece operable to receive a bias with respect to the plasma, wherein the plasma source and the extraction plate are interoperable to vary a width of the ion beam incident on the substrate by varying plasma power.

14. The ion implantation apparatus of claim **13**, wherein the plasma source is an RF source.

15. The ion implantation apparatus of claim **13**, comprising a DC power source operable to supply one of a pulsed DC bias and a constant DC bias between the workpiece and plasma.

16. The ion implantation apparatus of claim **13**, wherein the ion implantation apparatus is operable to produce a same ion beam width at the workpiece at a plurality of plasma power levels.

17. The ion implantation apparatus of claim **15**, wherein the apparatus is operable to apply a DC voltage as DC pulses between the plasma and workpiece, the DC voltage comprising on and off periods, wherein no DC voltage is applied between the plasma and workpiece during the off periods.

18. The ion implantation apparatus of claim **17**, wherein the system is operable to change plasma power between the first and second power levels during off periods of the pulsed DC voltage.

19. The ion implantation apparatus of claim **18**, wherein the system is operable to apply a first duty cycle of the DC pulses during periods when the first power level of the plasma is applied and operable to apply a second duty cycle of the DC pulses during periods when the second power level of the plasma is applied.

20. An article, comprising a computer-readable storage medium containing instructions that if executed by a processor enable an ion implantation system to:

scan a workpiece holder with respect to an extraction plate arranged to extract ions from a plasma through at least one aperture that provides an ion beam towards the workpiece;

apply a DC voltage between the plasma and workpiece; and

vary a power level of the plasma during the scan while maintaining the first scan rate.

21. The article of claim **20**, comprising a computer-readable storage medium containing instructions that if executed by a processor enable an ion implantation system to:

apply the DC voltage as DC pulses between the plasma and workpiece, the DC voltage comprising on and off periods, wherein no DC voltage is applied between the plasma and workpiece during the off periods; and

synchronize a transition between the first and second power levels of the plasma with off periods of the pulsed DC voltage.

22. The article of claim **21**, comprising a computer-readable storage medium containing instructions that if executed by a processor enable an ion implantation system to:

apply a first duty cycle of the DC pulses during periods when the first power level of the plasma is applied; and

apply a second duty cycle of the DC pulses during periods when the second power level of the plasma is applied.

* * * * *