US 20130287963A1

(19) **United States**

(12) **Patent Application Publication**

Radovanov et al.

(10) **Pub. No.: US 2013/0287963 A1**

(43) **Pub. Date: Oct. 31, 2013**

(54) **PLASMA POTENTIAL MODULATED ION IMPLANTATION APPARATUS**

(75) Inventors: **Svetlana B. Radovanov**, Brookline, MA (US); **Ludovic Godet**, Boston, MA (US); **Bon-Woong Koo**, Andover, MA (US); **Timothy J. Miller**, Ipswich, MA (US)

(73) Assignee: **VARIAN SEMICONDUCTOR EQUIPMENT ASSOCIATES, INC.**, Gloucester, MA (US)

(21) Appl. No.: **13/457,455**

(22) Filed: **Apr. 26, 2012**

Publication Classification

(51) **Int. Cl.**
C23C 14/48 (2006.01)

(52) **U.S. Cl.**
USPC **427/523**; 118/719

(57) **ABSTRACT**

An ion implantation apparatus including a first plasma chamber, a second plasma chamber and an extraction electrode disposed therebetween. The first and second plasma chambers configured to house respective plasmas in response to the introduction of a different feed gases therein. The extraction electrode is electrically isolated from the plasma chamber. An extraction voltage is applied to the first plasma chamber above a bias potential used to generate the plasma therein. The extraction voltage drives the plasma potential to accelerate the ions in the first plasma to a desired implant energy. The accelerated ions pass through an aperture in the extraction electrode and are directed toward a substrate housed within the second plasma chamber for implantation.

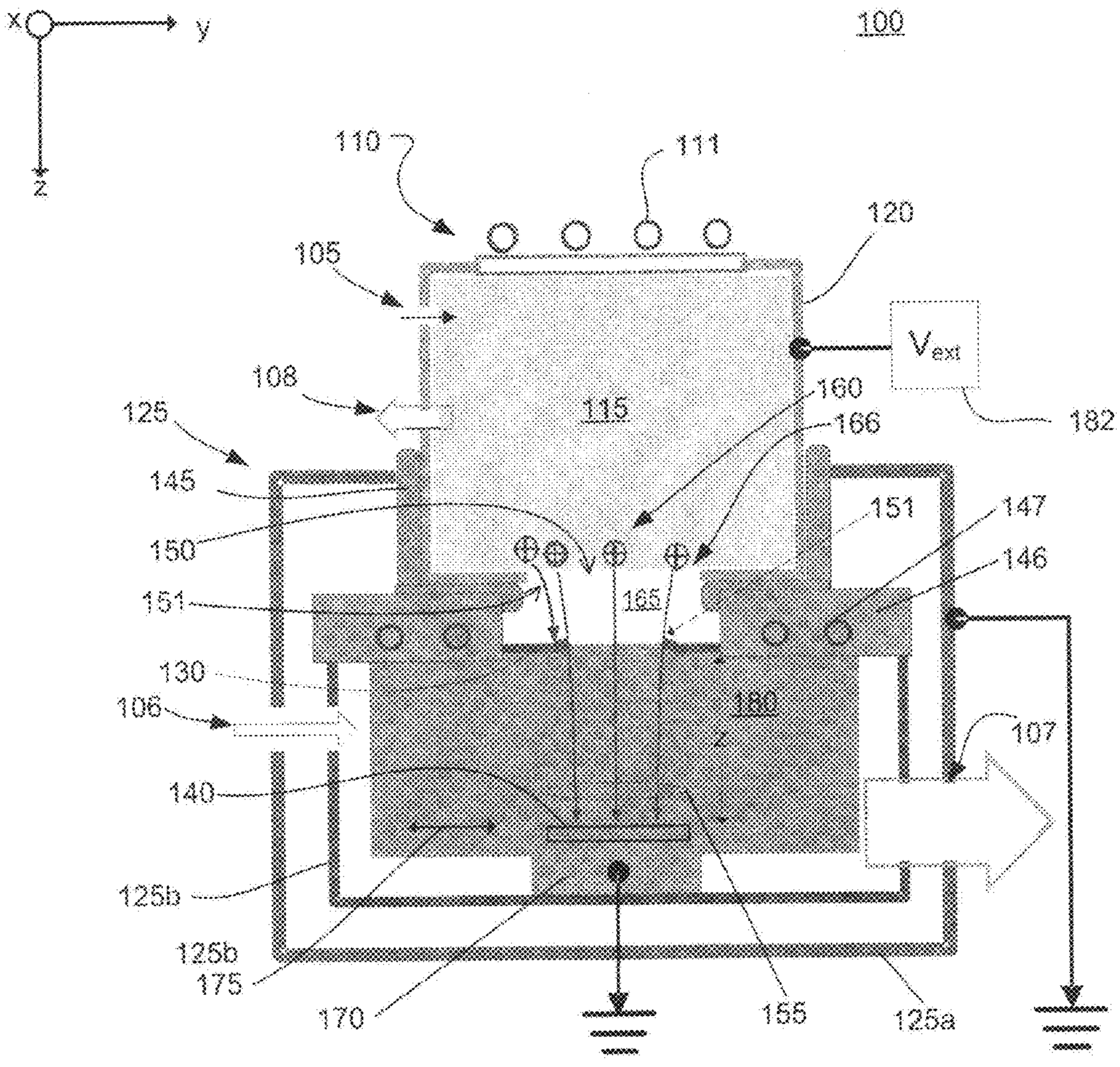

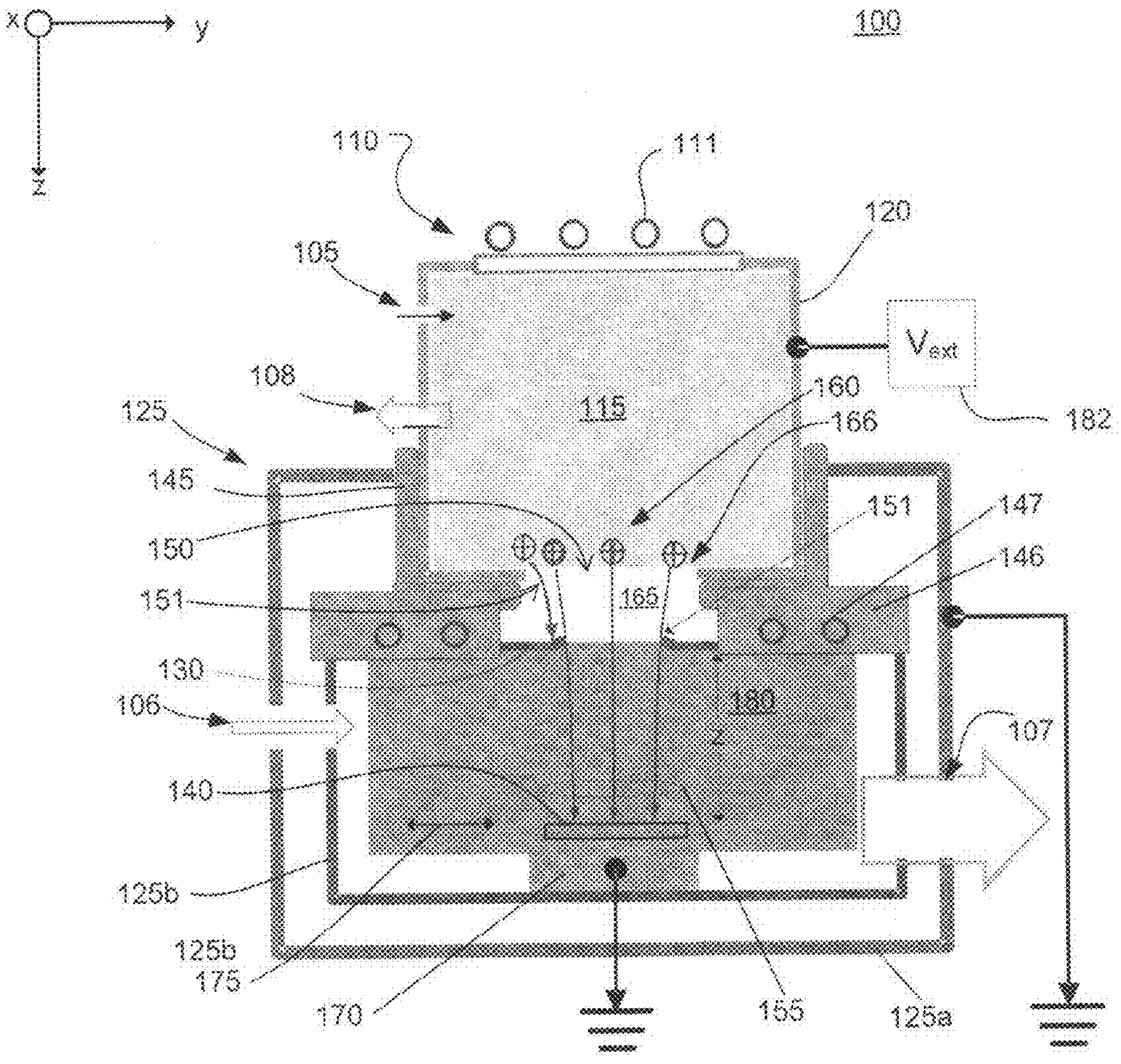
x
y
z
100
110
111
120
105
108
115
125
160
166
182
145
150
151
147
146
165
130
180
106
107
140
125b
125b
175
170
155
125a

FIG. 1

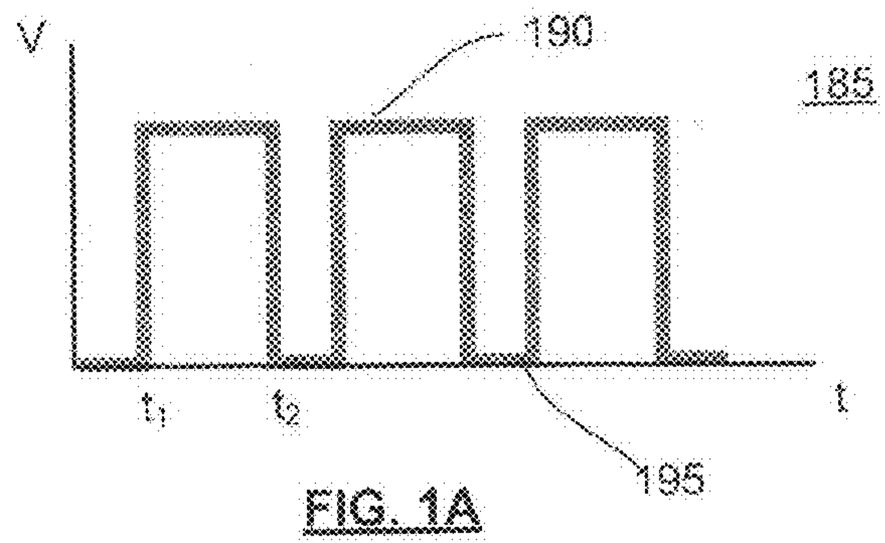
V
190
185
t1
t2
t
195

FIG. 1A

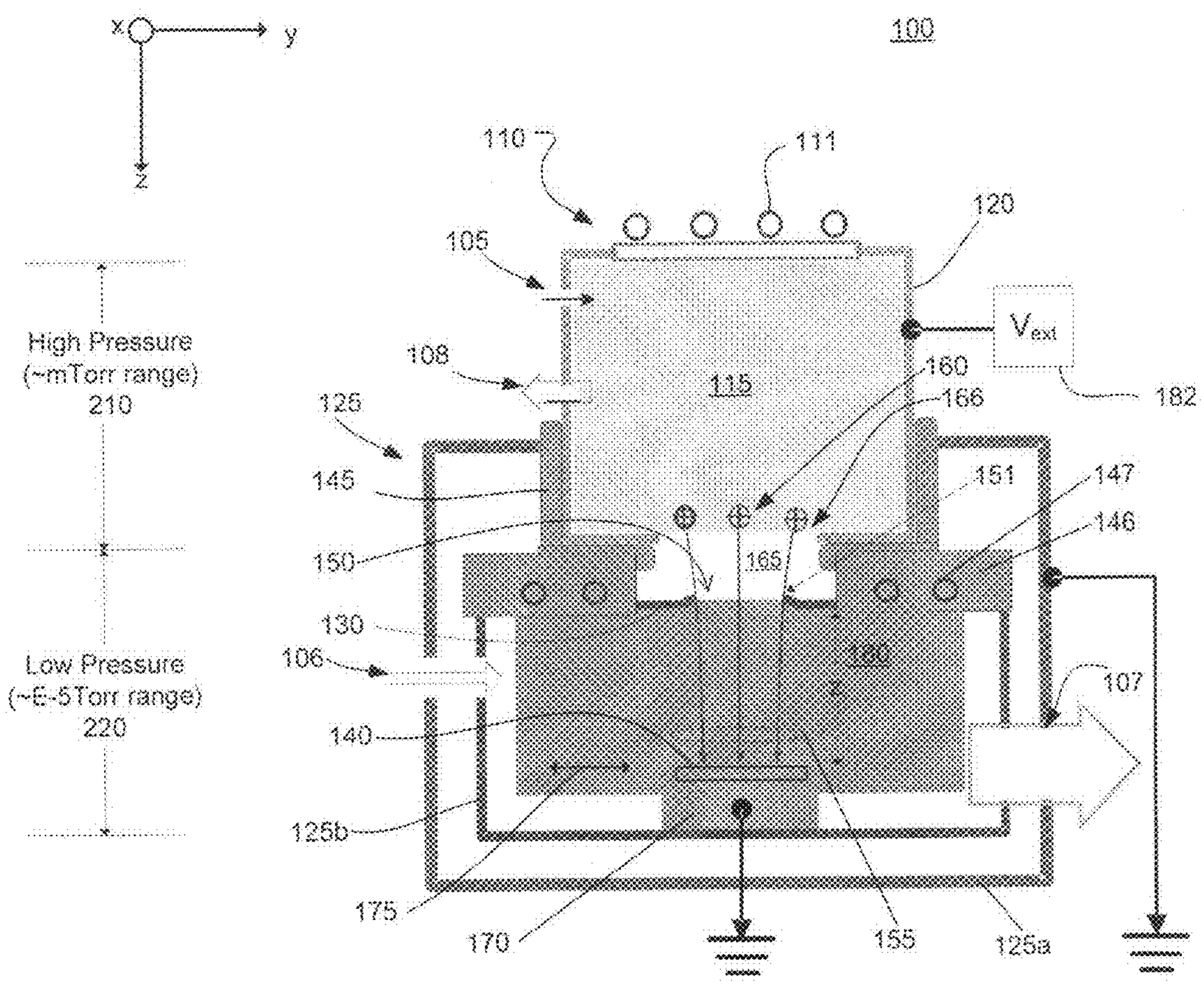
x
y
z
High Pressure
(~mTorr range)
210
Low Pressure
(~E-5Torr range)
220
100
110
111
120
105
108
115
125
145
150
130
106
140
125b
175
170
155
125a
107
160
166
182
151
147
146
165
180
V_{ext}

FIG. 2

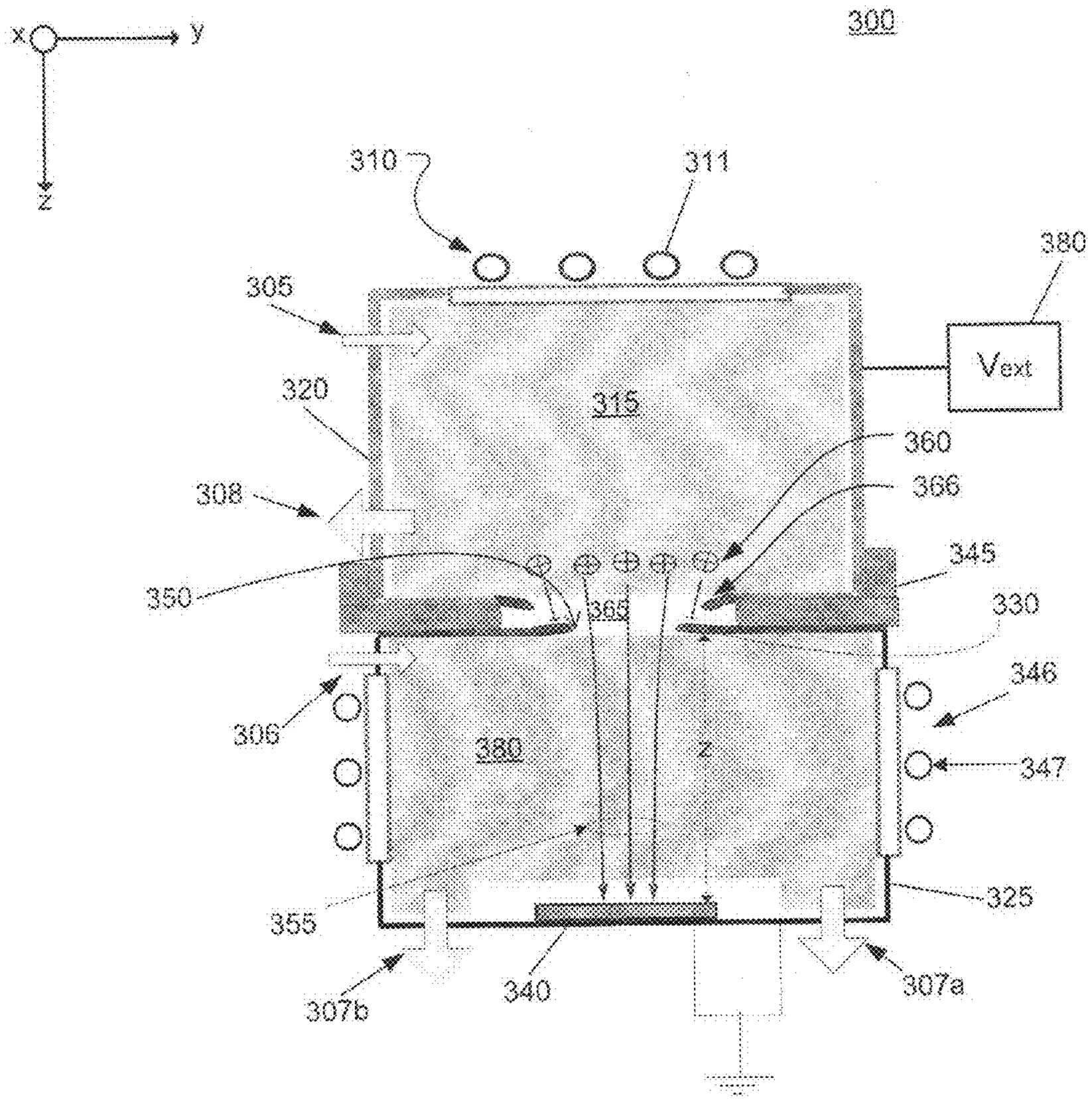
x
y
z
300
310
311
380
305
Vext
320
315
360
308
366
345
350
365
330
346
306
380
z
347
325
355
340
307b
307a

FIG. 3

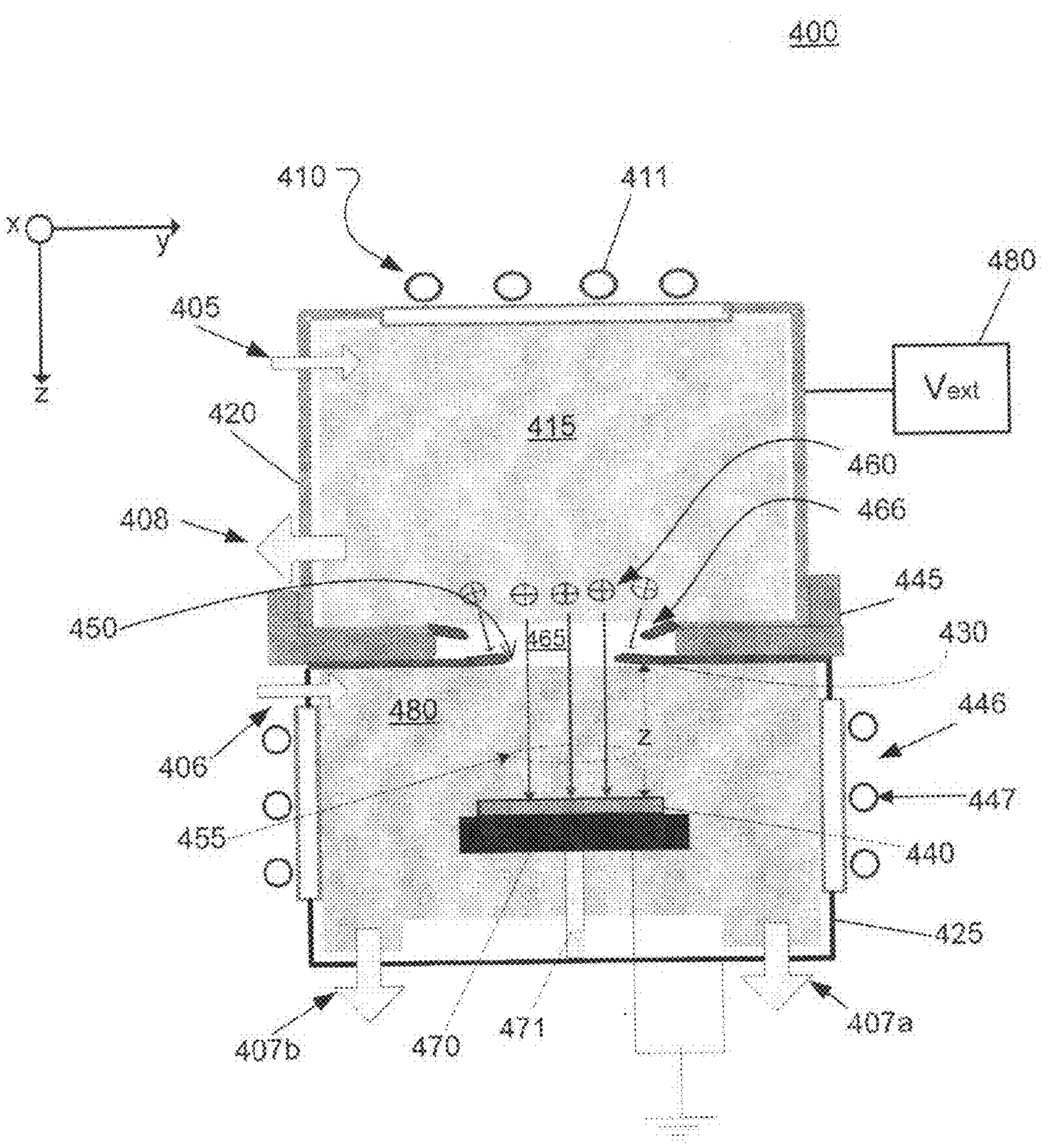
400
410
411
x
y
z
480
405
Vext
420
415
460
466
408
445
450
465
430
480
446
406
z
447
455
440
425
407b
470
471
407a

FIG. 4

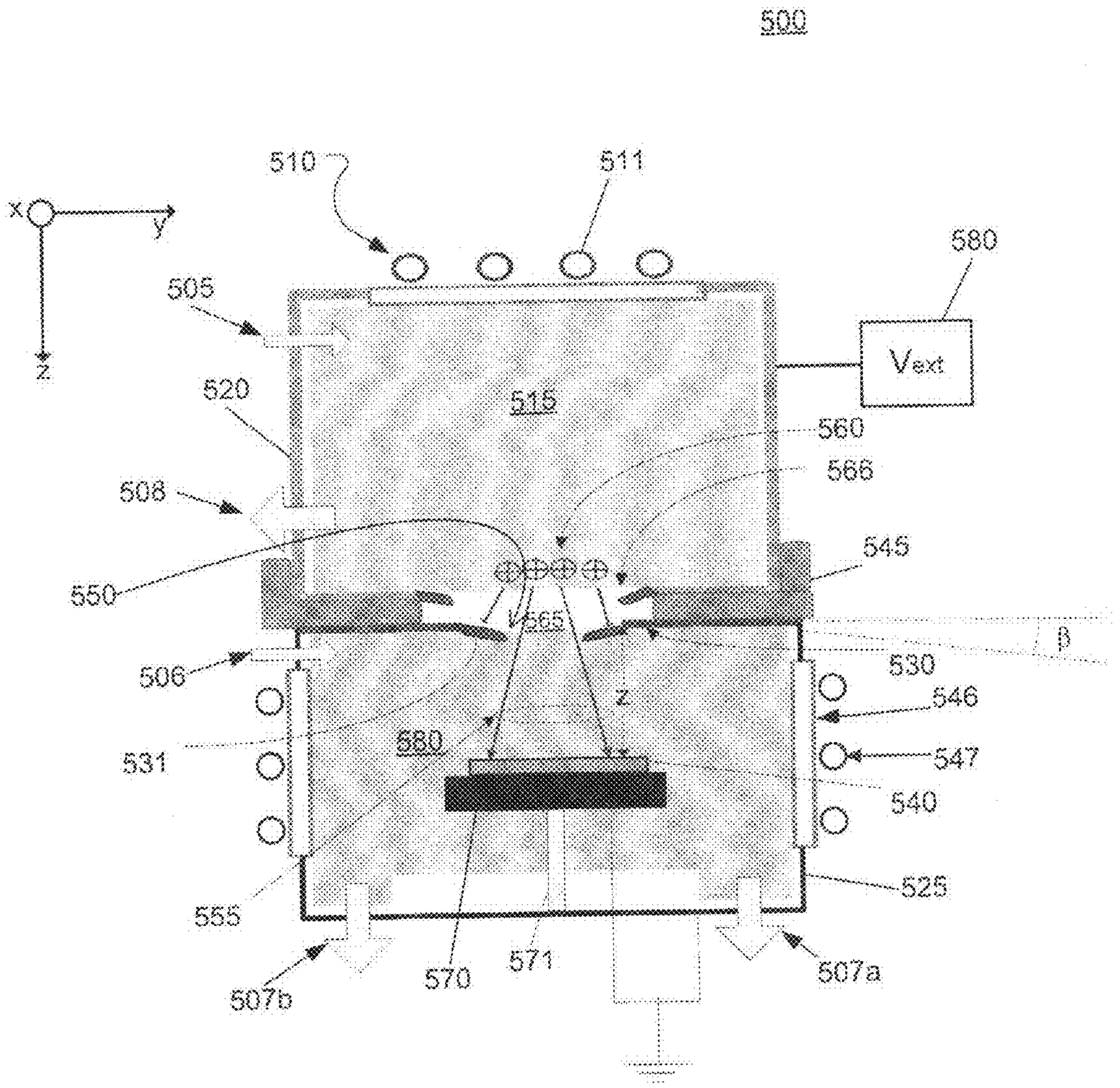
500
510
511
580
505
Vext
515
520
560
566
508
545
550
565
β
506
530
546
z
560
531
547
540
525
555
570
571
507a
507b

FIG. 5

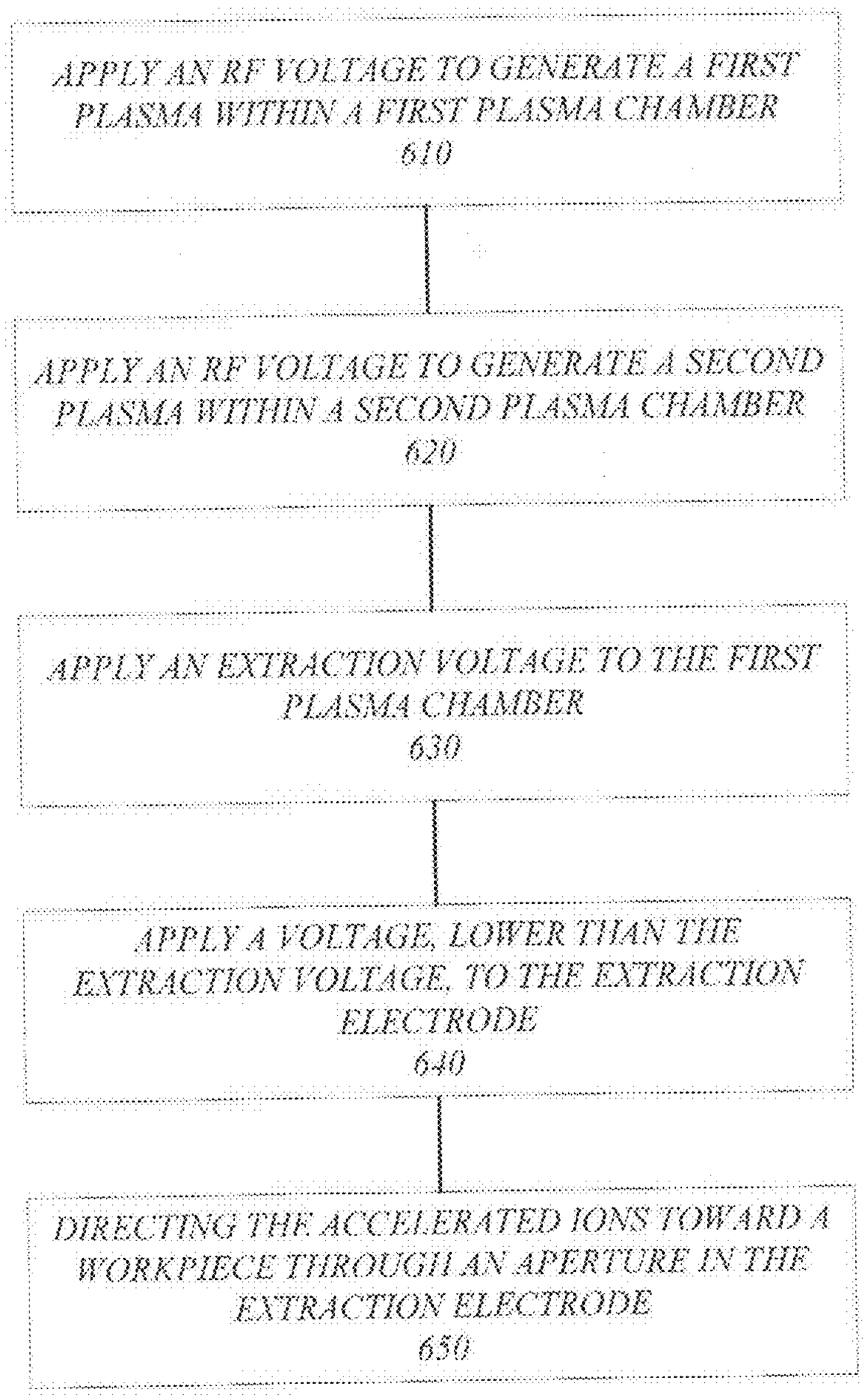
600
APPLY AN RF VOLTAGE TO GENERATE A FIRST PLASMA WITHIN A FIRST PLASMA CHAMBER
610
APPLY AN RF VOLTAGE TO GENERATE A SECOND PLASMA WITHIN A SECOND PLASMA CHAMBER
620
APPLY AN EXTRACTION VOLTAGE TO THE FIRST PLASMA CHAMBER
630
APPLY A VOLTAGE, LOWER THAN THE EXTRACTION VOLTAGE, TO THE EXTRACTION ELECTRODE
640
DIRECTING THE ACCELERATED IONS TOWARD A WORKPIECE THROUGH AN APERTURE IN THE EXTRACTION ELECTRODE
650

FIG. 6

PLASMA POTENTIAL MODULATED ION IMPLANTATION APPARATUS

BACKGROUND

[0001] This invention relates generally to the implantation of substrates. More particularly, the present invention relates to precise dopant placement and/or precision material modification of conductive, insulating substrates and semiconductor substrates used for fabrication of solar cells, flat panel devices, LEDs, image sensors, and other devices.

[0002] Ion implantation is a standard technique for introducing property-altering impurities into substrates. A desired impurity material is ionized in an ion source, the ions are accelerated to form an ion beam of prescribed energy, and the ion beam is directed at the surface of the substrate. The energetic ions in the beam penetrate into the sub-surface of the substrate material and are embedded into the crystalline lattice of the substrate material to form a region of desired conductivity or material property.

[0003] Localized or selective doping or localized or selective material modification may be required for some implants. For example, fabrication of solar cell devices and/or manufacturing of flat panel devices present examples in which high dose implantation and selective doping of local areas are desirable. These high dose implantation applications require relatively high-throughput to provide an alternative to competitive fabrication techniques and systems and to contribute to the lowest cost-of-ownership for an ion implantation system. However, high-volume production for implant applications for these devices confronts significant challenges due, in part, to "glitching" in the extraction region. Generally, "glitching" refers to the interruption in beam current of an ion beam incident on a surface of a substrate. More particularly, glitching is a sudden transient in the beam current that may adversely affect dose uniformity of implant species on a target substrate.

[0004] Another challenge for ion beam processing of insulated substrates is the need to dissipate charge which may occur during ion implantation because of the fact that ions impinging on the substrate by nature carry charge. In the case of ion beams that comprise positive ions, positive charge may build up on the substrate after exposure to the ion beam. In order for this charge to be dissipated, the substrate holder or platen may be grounded, thereby providing a conductive path for conducting the charge from the substrate surface. However, if the substrate itself is a poor conductor or an electrical insulator, and/or if there is poor electrical backside contact, the charge on the substrate surface may have no conductive path to ground, thereby preventing the charge from being dissipated.

[0005] Certain ion implantation systems suffer from a lack of suppression in the extraction region where plasma in the source chamber is coupled with the ions incident on the surface of the substrate. This may cause source instability, glitching and beam current drift. To correct for these challenges, some ion implantation systems utilize various extraction electrode configurations including, for example, a suppression electrode, a focus electrode and a ground electrode to control the extracted beam quality and to suppress unwanted glitching. Although adding these components may mitigate these challenges, it also adds to system complexity and adversely affects cost of ownership of these implanters used for high-volume production. Accordingly, there is a need in the art for an improved implantation of workpieces and, more particularly, to an improved method and apparatus for implantation of substrates while avoiding ion beam glitching and mitigating surface charge build-up.

SUMMARY

[0006] This Summary is provided to introduce a selection of concepts in a simplified form that are further described below in the Detailed Description. This Summary is not intended to identify key features or essential features of the claimed subject matter, nor is it intended as an aid in determining the scope of the claimed subject matter.

[0007] Various embodiments are generally directed to an ion implantation apparatus. Some embodiments are particular directed to an ion implantation apparatus arranged to modulate a plasma potential within a chamber to accelerate ions in the plasma for implantation in a substrate. In one embodiment, a first plasma chamber is operable to produce first plasma in response to the introduction of a first gas. A second plasma chamber is also operable to produce second plasma which is inert, in response to the introduction of a second gas different from the first gas. An electrically conductive extraction electrode is disposed between the first and second plasma chambers. An extraction voltage is applied to the first plasma chamber to accelerate ions having certain characteristics, such as certain dopant characteristics, within the first plasma chamber. A high voltage sheath is defined between the first plasma and the extraction electrode since the extraction electrode is at ground potential with respect to the first plasma. The extraction electrode includes an aperture through which these accelerated ions are extracted into the second plasma chamber. These accelerated ions form an ion beam. A substrate is disposed within the second plasma chamber and is aligned with the aperture of the extraction electrode to provide implantation of the ions comprising the ion beam into the substrate.

[0008] In one embodiment, for example, a first bias voltage is applied to a plasma source to generate first plasma within a first plasma chamber. A second bias voltage is applied to a second plasma source within a second plasma chamber to generate second plasma. An extraction voltage is applied to the first plasma chamber to accelerate ions within the first plasma to desired implant energy. A workpiece is disposed within the second plasma chamber. An extraction electrode, disposed between the first and second plasma chambers, is at a lower potential than the plasma in the first chamber and is used to extract ions that form an ion beam propagating through a plasma in the second chamber. The extraction electrode directs the ion beam toward the workpiece for implantation therein.

BRIEF DESCRIPTION OF THE DRAWINGS

[0009] FIG. **1** illustrates a schematic cross sectional view of an ion implantation processing apparatus.

[0010] FIG. **1**A illustrates an exemplary voltage pulse train utilized by the implantation apparatus of FIG. **1**.

[0011] FIG. **2** illustrates a schematic cross sectional view of an ion implantation processing apparatus.

[0012] FIG. **3** illustrates a schematic cross sectional view of an ion implantation processing apparatus.

[0013] FIG. **4** illustrates a schematic cross sectional view of an ion implantation processing apparatus.

[0014] FIG. **5** illustrates a schematic cross sectional view of an ion implantation processing apparatus.

[0015] FIG. **6** illustrates an embodiment of a logic flow for the operation of an ion implantation apparatus.

DETAILED DESCRIPTION

[0016] Embodiments of an apparatus and method are described herein in connection with implantation of workpieces or substrates. In various embodiments, this apparatus can be used with, for example, solar cell substrates, semiconductor substrates, flat panels, and substrates comprising insulating material. The invention is not limited to the specific embodiments described below.

[0017] In various embodiments, an ion implantation apparatus includes a first plasma chamber, a second plasma chamber and an extraction electrode disposed there between. The first plasma chamber may utilize a plasma source to generate first plasma in response to the introduction of a first gas having desired properties, such as desired dopant properties. In various embodiments, the plasma may be generated within the first plasma chamber by RF discharge. An extraction voltage is applied to the first plasma chamber to accelerate ions within the plasma to desired implant energy. The extraction electrode may define a portion of the first plasma chamber and or a portion of the second plasma chamber, but is electrically isolated from the first plasma chamber and may be maintained at ground potential. In addition, the extraction electrode may be at the same potential as the second plasma chamber. The accelerated ions traverse a plasma sheath within the first plasma chamber defined between the first plasma and the extraction electrode. The accelerated ions having the desired trajectories pass through an aperture in the extraction electrode and form an ion beam. The ion beam passes through the second plasma chamber for implantation in a substrate or workpiece disposed at one end of the second plasma chamber. The second plasma within the second plasma chamber may be inert plasma based on the introduction of a second gas which is different from the first gas. The second plasma acts as a lens where the neutrals and ionized species are at a lower pressure than the first plasma in the first plasma chamber. The density of the second plasma is lower than the density of the ion beam formed by the accelerated ions extracted from the first plasma chamber. A pressure differential is maintained between the first plasma chamber and the second plasma chamber by a first pumping system attached to the first plasma chamber and a second pumping system attached to the second plasma chamber. This pressure differential allows the use of the two different gases introduced into the first and second plasma chambers respectively. Since the substrate or workpiece disposed within the second plasma chamber may be an insulating material such as, for example, a substrate having a polymer on its surface or a substrate having a large glass surface, and is surrounded by the inert plasma, the surface charge of the substrate which may be deleterious to the desired implant process is neutralized.

[0018] In various embodiments, the workpiece disposed within the second plasma chamber may be implanted at various implant energies based on the modulated plasma potential resulting from the application of the extraction voltage to the first plasma chamber. The first plasma chamber may be maintained at a uniform high pressure with respect to the second plasma chamber and the workpiece disposed therein which are maintained at a lower pressure. Since the second plasma chamber and the workpiece are maintained at ground potential, a field free region is defined between the extraction electrode and the workpiece. In this manner, the high voltage stress region is inside the first plasma chamber where the pressure is uniform which is decoupled from the pressure gradient located in the area defined between the extraction electrode and the workpiece in the second plasma chamber. This contributes to stable plasma operation. In addition, since the extraction electrode is a part of first plasma chamber but is electrically isolated from the first plasma chamber through the sheath within the first plasma chamber, the extraction electrode undergoes ion bombardment from the accelerated ions. This provides a means for self cleaning of the extraction electrode disposed between the first plasma chamber and the workpiece, thereby minimizing apparatus downtime related to deposition and/or flaking on the extraction electrode.

[0019] FIG. **1** illustrates a schematic cross sectional view of an ion implantation processing apparatus **100** including a first plasma chamber **120**, a second plasma chamber **125** and an extraction electrode **130** disposed between the first and second plasma chambers. First plasma **115** is generated within first plasma chamber **120** in response to plasma source **110** and the introduction of a gas via port **105**. An exhaust **108** is used to regulate the pressure within first plasma chamber **120** and in combination with port **105** defines a first pumping system associated with the first plasma chamber **120**. In various embodiments, the plasma source **110** may be an RF plasma source, inductively-coupled plasma (ICP) source, or other plasma source known to those skilled in the art. However, in the exemplary embodiment shown in FIG. **1** the plasma source **110** may be an RF plasma source that includes RF antenna **111**. The applied RF signal generated by the plasma source **110** may be pulsed or CW to generate the plasma **115** by RF discharge within first plasma chamber **120**.

[0020] The extraction electrode **130** is disposed between the first plasma chamber **120** and the second plasma chamber **125**. The extraction electrode **130** may be made from an electrically conductive material and is electrically isolated from the first plasma chamber **120** using insulated spacers **145**. The extraction electrode **130** is electrically connected to the second plasma chamber **125**. The extraction electrode **130** may include an aperture **150**, through which accelerated ions **160** are extracted from first plasma chamber **120** toward substrate (or workpiece) **140** disposed within the second plasma chamber **125** for implantation therein. For example, extraction electrode **130** may be a unitary electrically conductive plate (e.g. graphite, silicon or silicon carbide) having an aperture **150** defining a gap having a horizontal spacing or width which may be, for example, 0.5-10 mm.

[0021] The second plasma chamber **125** is defined by an outer wall **125***a* and an inner wall **125***b*. The second plasma **180** is generated in response to the introduction of a gas, such as a dopant gas or an inert gas, within the inner wall **125***b* of the second plasma chamber **125** via port **106**. A plasma source **146** associated with the second plasma chamber **125** is disposed at a first end of the plasma chamber **125**. The plasma source **146** may be an RF plasma source, inductively-coupled plasma (ICP) source, or other plasma source known to those skilled in the art. In the exemplary embodiment shown in FIG. **1** the plasma source **146** may be an RF plasma source that includes RF antenna **147**. The applied RF signal generated by the plasma source **146** may be pulsed or CW to generate the plasma **180** by RF discharge within second plasma chamber **125**.

[0022] An exhaust port **107** extends from the outer wall **125***a* through inner wall **125***b* and is configured to regulate the

pressure within second plasma chamber **125** as discussed in more detail with reference to FIG. **2**. A pedestal or platen **170** is disposed within plasma chamber **125** and is configured to support one or more substrates **140** for implantation. Substrates **140** may be solar cells or other devices arranged on platen **170** which may use electrostatic clamping, mechanical clamping, or a combination of electrostatic and mechanical clamping to retain the substrates **140** in position. As used herein, substrate **140** or substrates **140** may refer to one or more substrates disposed on platen **170** which are exposed to ion beam **155**. The substrate **140**, aligned a distance away from extraction electrode **130**, undergoes ion implantation and is displaced in either direction as indicated by arrow **175** and another substrate **140** is aligned with aperture **150** to undergo implantation and the process continues. The substrate **140** may be displaced in either direction indicated by arrow **175** by platen **170** in a continuous manner which provides uniform implantation to the substrate **140**. Alternatively, a substrate **140** may be displaced in either direction indicated by arrow **175** by platen **170** in a stepwise fashion to provide, for example, patterned implantation to form structures such as a selective emitter.

[0023] A power source **182** is electrically connected to first plasma chamber **120** and is configured to apply an extraction voltage V_{ext} to drive the plasma potential (V_p) of plasma **115** to a desired energy level. The extraction voltage V_{ext} may be, for example, between 0.1-20 kV. A plasma sheath **165** is defined between a plasma boundary **166** and extraction electrode **130** due to the application of the extraction voltage V_{ext} supplied by power source **182** to the first plasma chamber **120**. In order to define this high voltage sheath **165** between the plasma boundary **166** and extraction electrode **130**, the extraction electrode **130** is at ground potential. In addition, since the second plasma chamber **125**, extraction electrode **130**, and substrates **140** all may be at ground potential or any potential lower than the plasma potential (V_p), the plasma potential V_p is positively biased with respect thereto and may likewise be, for example 0.1-20 KV corresponding to the applied extraction voltage V_{ext}. Based on the applied extraction voltage V_{ext}, ions within plasma **115** are accelerated across the high voltage sheath **165** through aperture **150** to form beam **155**. The accelerated ions **160** generated in first plasma chamber **120** may be, for example, a p-type dopant, an n-type dopant, or other species known to those skilled in the art based on the gas introduced via port **105**. Since the accelerated ions **160** that form beam **155** are like charged, they tend to repel or diverge from one another as they travel through second plasma chamber **125** toward substrate **140**. In order to control this divergence, extraction electrode **130** may be separated from substrates **140** by a distance "Z" referred to as an "extraction gap" which may be, for example, between **1** to **30** cm depending on the application. The extraction gap Z may be adjusted depending on the shape of extraction electrode **130** and more particularly the configuration of aperture **150** as well as the implant energy of the ions forming beam **155**. FIG. **1***a* illustrates an exemplary pulse train **185** representing extraction voltage V_{ext} used to drive the plasma potential V_p within first chamber **120** to a desired potential. In particular, voltage pulse train **185** includes "ON" portions **190** in which the extraction voltage V_{ext} is supplied to the walls of first plasma chamber **120** and "OFF" portions **195** in which the extraction voltage V_{ext} is not supplied to the walls of first plasma chamber **120**. The ON portion **190** includes a pulse rise-time at t_1 and the pulse-OFF portion **195** has a pulse fall-time at t_2. The ON portion **190** includes a steady state duration defined between time t_2 and t_1. The pulse rise-time at t_1 plus the pulse fall-time at t_2 is less than 25% of the steady state duration of the ON portion **190** defined between time t_2 and t_1.

[0024] During the pulse OFF portions **195**, the plasma potential V_p remains at a typical plasma potential (e.g. 10-30V). This typical plasma potential V_p during the OFF portions **195** is insufficient to drive the plasma potential to the desired extraction potential and therefore the ions in the first plasma **115** do not have enough energy to pass through aperture **150** of extraction electrode **130** for implantation into substrate **140** housed within the second plasma chamber **125**. However, during the pulse ON portions **190**, the extraction voltage V_{ext} applied to the first plasma chamber **120** by power source **182** drives the plasma potential V_p above the bias voltage applied using plasma source **110**. This increase in plasma potential V_p accelerates ions **160** within plasma **115** to a desired implant energy. In this manner, the extraction voltage V_{ext} applied to the walls of first plasma chamber **120** by power supply **180** controls the plasma potential in the first plasma chamber **120** relative to the extraction electrode **130** in order to create an attractive potential at the extraction electrode **130** for the plasma ions in the first plasma chamber **120**. The accelerated ions cross plasma sheath **165** defined between plasma **115** and extraction electrode **130** and are directed toward substrate **140** through second plasma chamber **125** for implantation.

[0025] The type of ions **160** generated in plasma **115** may be controlled by the type of gas introduced into first plasma chamber **120**. In addition, the depth of implantation into substrates **140** may be controlled by the implant energy of the ions **160** as well as the total dose of ions applied by power source **182**. In the exemplary pulse train **185**, the duty cycle of ON portions **190** may be greater than 50% and OFF portions **195** may be less than 50%. Thus, the bias voltage applied to first plasma chamber **120** may constitute a series of square wave pulses consisting of a series of high positive voltage levels **190** and a series of low or 0V portions **195**. Alternatively, the extraction voltage V_{ext} supplied by power source **182** may be DC which results in a 100% duty cycle. The ability to provide an increase in duty cycles provides increased thorough-put for the ion implantation apparatus **100**.

[0026] In the exemplary embodiment shown in FIG. **1**, the area proximate aperture **150** of extraction electrode **130** has a curved or angled profile portion **151** with respect to substrate **140**. This directs the accelerated ions **160** aligned with aperture **150** of extraction electrode **130** into a parallel beam from first plasma chamber **120**. Although neutrals present in plasma **115** may deposit on extraction electrode **130**, the accelerated ions **160** generated during the modulated extraction voltage ON portions **190** of pulse train **185** may reduce and/or eliminate deposition and flaking formations present in the extraction region defined by the surface of the extraction electrode **130** facing first plasma chamber **120**. This is due to the fact that some portion of the accelerated ions **160** having trajectories **151** that do not align with aperture **150** of extraction electrode **130** bombard the surface of the extraction electrode **130**. This reduces or eliminates deposition and flaking formations on the surface of the extraction electrode **130** facing plasma **115**. This minimizes maintenance and apparatus downtime to replace or clean extraction electrode **130**. Moreover, since the extraction electrode **130** is at ground

potential, the deleterious effects of secondary electrons resulting from ions implanting in the substrate **140** is potentially avoided.

[0027] FIG. **2** illustrates the ion implantation apparatus **100** shown in FIG. **1**. As described above, power source **182** is configured to apply an extraction voltage to first plasma chamber **120** indicated by exemplary pulse train **185** shown in FIG. **1**A to drive the plasma potential (V_p) to a desired extraction potential with respect to the extraction electrode **130** and substrate **140**. Alternatively, the extraction voltage may also be a DC bias. The ON portions **190** of voltage pulse **185** applied to the walls of first plasma chamber **120** may be at a relatively high voltage in order to increase the plasma potential sufficiently to accelerate the ions in plasma **115** to a desired implant energy (e.g. 1-20 keV). Therefore, the high voltage (HV) stress region is inside the first plasma chamber. The first plasma chamber **120** is maintained at a high pressure, for example in the ~mTorr range as indicated at reference **210**. A plasma sheath region **165** is defined between the plasma boundary **166** and extraction electrode **130**. This plasma sheath region **165** has a high electric field. The high pressure within the first plasma chamber **120** is regulated by the use of exhaust **108** and port **105** which defines the first pumping system associated with the first plasma chamber **120**.

[0028] As mentioned above, the second plasma chamber **125** includes port **106** which extends from outer wall **125***a* to inner wall **125***b* through which a second gas with the desired properties, such as desired dopant properties or other properties, is introduced to generate second plasma **180**. Exhaust port **107** extends from the inner wall **125***b* of second plasma chamber **125** through outer wall **125***a*. The second plasma chamber **125** is maintained at a relatively low pressure (e.g. in range of E−4 to E−5 Torr)) and is regulated by the use of exhaust **107** and gas inlet port **106**. The differential pumping system defined by port **105** and exhaust **108** associated with chamber **120** and port **106** and exhaust **107** is configured to control gas breakdown in the respective chambers and enable independent plasma discharges in the two chambers. In addition, since the extraction electrode **130**, second plasma chamber **125** and substrate **140** are maintained at ground potential, the electric field in the second plasma chamber is essentially a field-free region. Thus, the high voltage stress region is confined to the first plasma chamber **120**.

[0029] In addition, the second plasma chamber **125** is maintained at a relatively low pressure, in the ~E−4 to E−5 Torr range for example as indicated at reference **220**. Thus, the pressure gradient is defined where the pressure changes from a relatively high pressure within first plasma chamber **120** to a relatively low pressure in the second plasma chamber **125**. The width of aperture **150** in the y direction as well as the length of the aperture **150** in the x direction (also referred to as an aspect ratio) is relatively narrow so that the conductance of gas, such as dopant gas, from first plasma chamber **120** into second plasma chamber **125** is limited such that the pressure drop across extraction electrode **130** does not significantly impact the pressure gradient. This pressure gradient is down-stream of extraction electrode **130** where the electric field is essentially zero (i.e. where the second plasma chamber **125**, extraction electrode **130** and substrate **140** are at ground potential). Since the pressure gradient is down-stream of extraction electrode **130**, the first plasma chamber **120** and consequently the plasma **115** are not exposed to this pressure gradient. In this manner, the HV stress region of plasma formation in the first plasma chamber **120** is decoupled from the pressure gradient through which the extracted ions forming beam **155** are directed toward substrate **140** disposed within the second plasma chamber **125**.

[0030] As noted above, in certain prior systems a coupling may occur between the plasma in a source chamber and a target substrate which causes source instability, extraction glitching and potentially beam current drift. As previously described, glitching is an interruption in beam current of the extracted ion beam. In contrast, the apparatus **100** of the present disclosure decouples the first plasma **115** generated in the first plasma chamber **120** in the HV stress region of plasma formation from the pressure gradient region through which the extracted ions are focused toward substrate **140**. This provides for more stable system operation than previously considered and the deleterious effects of glitching are reduced. Thus, plasma operation may be stable at a given uniform pressure within first plasma chamber **120** and a relatively low pressure within second plasma chamber **125**. Moreover, since the first plasma **115** is not exposed to this pressure gradient, parameters within the first plasma chamber **120** such as, for example, plasma density, ion and electron temperature, plasma potential etc., may be controlled by modulation of the potential V_p of the first plasma **115**.

[0031] The second plasma **180** is a static neutral plasma confined in a magnetic or electrostatic field that provides a plasma lens to reduce the space charge forces of the ions that form ion beam **155** as well as making it possible to neutralize charge build-up on an exemplary insulating substrate **140** disposed with the second plasma chamber **125**. In particular, the second gas supplied to the second plasma chamber **125** via port **106** is different from the first gas supplied to the first plasma chamber **120** and is configured to produce an inert plasma **180** within second plasma chamber **125**. This inert plasma **180** may be the result of the introduction of inert gases, for example, Ar, Xe, etc., into the second plasma chamber **125** and the application of the applied RF signal generated by plasma source **145**. Since the substrate **140** is disposed on platen **170** within the second plasma chamber **125**, the substrate **140** which may be an insulating substrate, is immersed in the inert plasma **180**. The neutrals and ionized species present in the second plasma **180** are at a relatively low pressure. The second plasma **180** may be a relatively low density plasma as compared to the first plasma **115**. The plasma **180** provides charge neutralization of the ion beam **155**. In other words, the beam **155** traveling through the second plasma chamber **125** has a natural divergence characteristic since the extracted ions have like charge and tend to repel each other as they travel toward substrate **140**. However, the plasma density (np) of plasma **180** is greater than or equal to the density of beam **155** (nb) where np>nb. In addition, the edges of the beam **155** may be neutralized by the inert plasma **180**, but is limited to the scale lengths of vb which is the speed of ion beam **155** and ωpe which is the plasma electron frequency of the electrons moving with beam **155** where vb/ωpe.

[0032] The first plasma chamber **120** is maintained at a relatively high pressure which accommodates efficient plasma ion generation to form accelerated ions **160**. The second plasma chamber **125** is maintained at a relatively low pressure. This provides a relatively large ion to neutral mean collision distance which reduces scattering of the ions that form beam **155** as it travels through the second plasma chamber **125**. As the ions **160** travel through the plasma **180**, the charge of the ions that comprise beam **155** are partially neu-

tralized. This reduces the divergence or increases the convergence of the ions of beam **155**. Thus, the inert plasma within second plasma chamber **125** acts as a plasma lens by focusing or minimizing divergence of the ions that comprise ion beam **155** directed toward substrate **140**. Additionally, the substrate **140** may be an insulating substrate where charge build-up may occur during implantation thereof. This may result in relatively high potential voltage on the substrate **140** leading to undesirable non-uniformities and possibly substrate damage. However, since the substrate **140** and second plasma chamber **125** are at ground potential providing a field free region around the substrate, as well as the use of an inert plasma as plasma **180**, charge neutralization of the substrate **140** may be achieved.

[0033] In an alternative embodiment, the inert plasma **180** in the second plasma chamber **125** may be pulsed at the same frequency and duty cycle as the first plasma **115** in the first plasma chamber **120**. In particular, power source **182** applies an extraction voltage V_{ext} to drive the plasma potential (V_p) of plasma **115** to a desired energy level. This increase in plasma potential V_p accelerates ions **160** within plasma **115** to a desired implant energy. In this manner, the extraction voltage V_{ext} applied to the walls of first plasma chamber **120** by power supply **180** controls the plasma potential in the first plasma chamber **120** relative to the extraction electrode **130** in order to create an attractive potential at the extraction electrode **130** for the plasma ions in the first plasma chamber **120**. The accelerated ions cross plasma sheath **165** defined between plasma **115** and extraction electrode **130** and are directed toward substrate **140** through second plasma chamber **125** for implantation. A second gas is supplied to the second plasma chamber **125** to produce an inert plasma **180** within second plasma chamber **125** in response to the application of an applied RF signal generated by plasma source **145**. Since the substrate **140** is disposed on platen **170** within the second plasma chamber **125**, the substrate **140** which may be an insulating substrate, is immersed in the inert plasma **180**. In the previous embodiments, the second plasma chamber was maintained at ground potential together with substrate **140**. In this embodiment, the inert plasma in the second plasma chamber **125** may be pulsed at the same frequency and duty cycle as the extraction voltage applied to the walls of the first plasma chamber **120** where the rise time of each extraction voltage V_{ext} pulse (e.g. ON portions **190**) corresponds to the pulse applied to the walls of the second plasma chamber **125**. This facilitates charge neutralization of an exemplary insulating substrate **140** during the ON portions of the pulse applied to the walls of the first plasma chamber **120** and the second plasma chamber **125**.

[0034] FIG. **3** is a schematic cross sectional view of an ion implantation apparatus **300** utilizing an alternative arrangement of the second plasma chamber **325** and in particular, RF plasma source **346**. Similar to the ion implantation processing apparatus **100** shown in FIGS. **1** and **3**, the apparatus **300** includes a first plasma chamber **320**, a second plasma chamber **325** and an extraction electrode **330** disposed between the first and second plasma chambers. A first plasma **315** is generated within first plasma chamber **320** in response to an introduction of a gas to port **305** and the application of a RF discharge from exemplary plasma source **310** having RF antenna **311**.

[0035] The extraction electrode **330** is disposed between the first plasma chamber **320** and the second plasma chamber **325**. The extraction electrode **330** is electrically connected to the second plasma chamber **325** and includes aperture **350**. An extraction voltage V_{ext} is applied to the walls of first plasma chamber **320** by power supply **380** to increase the plasma potential in first plasma chamber **320** relative to the extraction electrode **330**, which is at ground potential, in order to create an attractive potential at the extraction electrode **330** for accelerated plasma ions **360** in the first plasma chamber **320**. The accelerated ions **360** cross plasma sheath **365** defined between plasma **315** and extraction electrode **330**. The accelerated ions **360** that are aligned with aperture **350** of extraction electrode **330** are directed toward substrate **340** through second plasma chamber **325** and form ion beam **355** for implantation. The accelerated ions **360** that do not have trajectories that align with aperture **350** are prevented from entering second plasma chamber **325** by extraction electrode **330**. These accelerated ions **360** bombard the surface of the extraction electrode **330** which reduces or eliminates unwanted deposition and flaking formations on the surface of the extraction electrode **330** facing plasma **315**. The first plasma chamber **320** is maintained at a high pressure, for example in the ~mTorr range and is regulated by the use of exhaust **308** and port **305** which defines the first pumping system associated with the first plasma chamber **320**. The plasma sheath region **365** is defined between the boundary **366** of first plasma **315** and the extraction electrode **330**.

[0036] The second plasma chamber **325** includes plasma source **346** used to generate second plasma **380** in response to the introduction of a gas within the chamber **325** via port **306**. The plasma source **346** associated with the second plasma chamber **325** may be disposed on the sides of the chamber and may be an RF plasma source including RF antenna **347**. The applied RF signal generated by the plasma source **346** may be pulsed or CW to generate the plasma **380** by RF discharge within second plasma chamber **325**. The second plasma chamber **325** is maintained at a relatively low pressure as compared to the pressure of first plasma chamber **320** and is regulated by the use of a pair of exhaust ports **307***a* and **307***b* disposed at an end of the second plasma chamber **325** as well as second gas flow rate **306**. A substrate **340** is disposed within the second plasma chamber **325**. The substrate **340** may be a solar cell aligned a distance "Z" (the extraction gap) away from aperture **350** of extraction electrode **330** to undergo ion implantation. Ions **360** in plasma **315** that are accelerated ions in response to the applied extraction voltage V_{ext} are directed through aperture **350** of extraction electrode **330** to form a beam **355**. The beam **355** is directed through second plasma chamber **325** toward substrate **340**. The extraction gap Z may be adjusted before and/or after cross-over of the accelerated ions **360** that comprise beam **355**.

[0037] FIG. **4** is a schematic cross sectional view of an ion implantation apparatus **400** utilizing an alternative positioning of substrate **440** within second plasma chamber **425** to control the focusing of extraction ion beam **455** on the substrate. In particular, the extraction gap Z may be modified to control the trajectories of the extracted ions from diverging before impinging an upper surface of substrate **440** disposed within the second plasma chamber **425**. As described above, an extraction voltage V_{ext} is applied to the walls of first plasma chamber **420** by power supply **480** to increase the plasma potential in first plasma chamber **420** relative to the extraction electrode **430**, which is at ground potential, in order to create an attractive potential at the extraction electrode **430** for the accelerated plasma ions **460** in the first plasma chamber **420**. The accelerated ions **460** cross plasma sheath **465** defined

between plasma **415** and extraction electrode **430**. The accelerated ions **460** that are aligned with aperture **450** of extraction electrode **430** form ion beam **455** and are directed toward substrate **440** disposed within second plasma chamber **425**. The substrate **440** may be disposed on platen **470** which is arranged within the second plasma chamber **425** by pedestal **471** to modify the extraction gap Z. The accelerated ions **460** that do not have trajectories that align with aperture **450** are prevented from entering second plasma chamber **425** by extraction electrode **430**. Although the plasma **480** within second plasma chamber **425** is inert and reduces the divergence properties of the ions that comprise beam **455**, the ions that comprise ion beam **455** have a natural divergence characteristic since the ions are "like charged" and tend to repel each other. By altering the positioning of substrate **440** within second plasma chamber **425**, the extraction gap Z may be modified. This allows control of the divergence of the ion beam **455** relative to the substrate **440**. In addition, by positioning the substrate **440** within the second plasma chamber **425** and exposing it to inert plasma **480**, charge neutralization of the substrate is achieved. However, changes in extraction gap Z, ion divergence considerations, charge neutralization and beam current are some of the factors to be considered when determining optimum positioning of substrate **440** within second plasma chamber **425**.

[0038] FIG. **5** is a schematic cross sectional view of an ion implantation apparatus **500** utilizing an alternative configuration of extraction electrode **540** to control ion beam **555** incident on substrate **540**. In particular, extraction electrode **540** includes portion **531** which is angled with respect to a plane parallel to a plane of substrate **540**. As described above, an extraction voltage V_{ext} is applied to the walls of first plasma chamber **520** by power supply **580**. This increases the plasma potential in first plasma chamber **520** relative to the extraction electrode **530**, which is at ground potential, in order to create an attractive potential at the extraction electrode **530** for the accelerated plasma ions **560** in the first plasma chamber **520**. The accelerated ions **560** cross plasma sheath **565** and the angled portion **531** of extraction electrode **530** proximate aperture **550** allows the accelerated ions **560** having trajectories that are aligned with the aperture to form ion beam **555**.

[0039] Since the portion **531** of extraction electrode **530** has an angle β with respect to a plane parallel to substrate **540**, the accelerated ions **560** having trajectories that are divergent from aperture **550** are directed toward substrate **550**. Although the extraction electrode **530** is illustrated as having angled portions **531** with a particular angle β, the embodiments are not limited in this respect. The substrate **540** may be disposed on platen **570** and arranged within the second plasma chamber **525** by pedestal **571** to modify the extraction gap Z. The accelerated ions **560** that do not have trajectories that align with aperture **550** are prevented from entering second plasma chamber **525** by extraction electrode **530**. In this manner, the extraction electrode **530** may be configured, proximate aperture **550** to control which accelerated ions **560** having particular trajectories are extracted from first plasma chamber **520**. Thus, by modulating the plasma potential V_p based on the extraction voltage V_{ext} applied to the walls of chamber **520** and by modifying the geometry of the extraction electrode **530** and by modifying plasma **515**, the trajectory of the accelerated ions **560** and consequently the ion beam **555** extracted from plasma chamber **520** may be controlled.

[0040] Included herein is a flow chart representative of an exemplary process for utilizing the ion implantation apparatuses disclosed herein. While, for purposes of simplicity of explanation, the one or more processes shown herein, for example, in the form of a flow chart or logic flow are shown and described as a series of acts, it is to be understood and appreciated that the processes are not limited by the order of acts as some acts may, in accordance therewith, occur in a different order and/or concurrently with other acts from that shown and described herein. For example, those skilled in the art will understand and appreciate that a methodology could alternatively be represented as a series of interrelated steps. Moreover, not all steps illustrated in a methodology may be required for a novel implementation.

[0041] FIG. **6** illustrates a logic flow **600** consistent with use of ion implantation apparatuses disclosed herein. An RF voltage may be applied to generate a first plasma within a first plasma chamber at block **610**. For example, in the ion implantation **100** shown in FIG. **1**, a first plasma **115** is generated within first plasma chamber **120** in response to plasma source **110** and the introduction of a gas **105** supplied to first plasma chamber **120**. An RF voltage may be applied to generate a second plasma within a second plasma chamber at block **620**. For example, the second plasma chamber **125** is defined by an outer wall **125***a* and an inner wall **125***b*. The second plasma **180** is generated in response to the introduction of a gas within the inner wall **125***b* of the second chamber **125** via port **106** and the application of an RF signal. An extraction voltage is applied to the first plasma chamber to accelerate ions within the plasma at block **630**. A voltage, lower than the extraction voltage, is applied to the extraction electrode and a workpiece disposed within the second plasma chamber at block **640**. For example, the extraction electrode and workpiece may both be at ground potential. The accelerated ions are directed toward the work-piece through an aperture in the extraction electrode during application of the extraction voltage for implantation therein at block **650**. For example, an extraction voltage V_{ext} is applied to the walls of first plasma chamber **120** by power supply **180** to increase the plasma potential in first plasma chamber **120** relative to the extraction electrode **130**, which is at ground potential, in order to create an attractive potential at the extraction electrode **130** for the accelerated plasma ions **160** in the first plasma chamber **120**. The accelerated ions **160** cross a plasma sheath **165** defined between plasma **115** and extraction electrode **130**. The accelerated ions **160** that are aligned with aperture **150** of extraction electrode **130** form ion beam **155** and are directed toward substrate **140** disposed within second plasma chamber **125**.

[0042] The present disclosure is not to be limited in scope by the specific embodiments described herein. Indeed, other various embodiments of and modifications to the present disclosure, in addition to those described herein, will be apparent to those of ordinary skill in the art from the foregoing description and accompanying drawings. In particular, embodiments in which various configurations of extraction electrodes and plasma chamber in order to provide a desired ion beam for implantation into a substrate are possible. Moreover, an embodiment in which the plasma potential is modulated at various power levels and frequencies is also possible. In addition, embodiments are contemplated in which substrate movements can be either continuous for blanket implants or stepwise for selective emitter implantation. Thus, such other embodiments and modifications are intended to fall within the scope of the present disclosure. Furthermore, although the present disclosure has been described herein in the context of a particular implementation in a particular

environment for a particular purpose, those of ordinary skill in the art will recognize that its usefulness is not limited thereto and that the present disclosure may be beneficially implemented in any number of environments for any number of purposes. Thus, the claims set forth below should be construed in view of the full breadth and spirit of the present disclosure as described herein.

What is claimed is:

1. An ion implantation apparatus, comprising:

a first plasma chamber operable to produce a first plasma in response to an introduction of a first gas by a first pumping system;

a second plasma chamber operable to produce a second plasma in response to an introduction of a second gas by a second pumping system; and

an extraction electrode, having an aperture, disposed between the first plasma chamber and the second plasma chamber, wherein the extraction electrode is electrically isolated from the first plasma chamber and is configured to allow accelerated ions from the first plasma to pass through the aperture for implantation into a substrate housed within the second plasma chamber, the accelerated ions in the first plasma are in response to an extraction voltage applied to the first plasma chamber.

2. The ion implantation apparatus of claim **1** wherein the first plasma chamber is at a first potential, and the extraction electrode, the second plasma chamber and the substrate are at a second potential that is negative with respect to the first potential.

3. The ion implantation apparatus of claim **1** wherein the extraction electrode is electrically isolated from the first plasma chamber by an insulated spacer.

4. The ion implantation apparatus of claim **1**, wherein the extraction electrode has a curved profile proximate the aperture configured to control a trajectory of the accelerated ions toward the substrate.

5. The ion implantation apparatus of claim **1** wherein the first plasma includes dopant ions and the second plasma is an inert plasma.

6. The ion implantation apparatus of claim **1** wherein a plasma sheath is defined between the first plasma within the first plasma chamber and the extraction electrode, ions in the first plasma being accelerated across the sheath through the extraction electrode when the extractive voltage is applied to the first plasma chamber.

7. The ion implantation apparatus of claim **1** comprising a power source connected to the first plasma chamber configured to supply the extraction voltage to the first plasma chamber to accelerate the ions therein to a desired implant energy.

8. The ion implantation apparatus of claim **7** wherein the power source is positively pulsed defining a duty cycle having a pulse-ON period and a pulse-OFF period, the pulse-ON period corresponding to the extraction voltage applied to the first plasma chamber.

9. The ion implantation apparatus of claim **8** wherein the pulse-ON period has a pulse rise-time and a steady state duration and the pulse-OFF period has a pulse fall-time, the pulse rise-time plus the pulse fall-time being less than 25% of the pulse-ON state duration.

10. The ion implantation apparatus of claim **1** wherein the first plasma chamber is maintained at a first pressure and the second plasma chamber is maintained at a second pressure, the first pressure being greater than the second pressure.

11. The ion implantation apparatus of claim **1** further comprising a pumping system having an input port to the first plasma chamber and an exhaust port from the first plasma chamber, the input port configured to supply a first gas thereto and the exhaust port configured to regulate a pressure within the first plasma chamber.

12. The ion implantation apparatus of claim **11** wherein the pumping system is a first pumping system, the apparatus further comprising a second pumping system having an input port to the second plasma chamber and an exhaust port from the second plasma chamber, the input port configured to supply a second gas thereto and the exhaust port configured to regulate a pressure within the first plasma chamber.

13. The ion implantation apparatus of claim **1** further comprising a voltage source connected to the first plasma chamber configured to provide an RF bias voltage to the first plasma chamber to generate the first plasma.

14. The ion implantation apparatus of claim **1** further comprising a voltage source connected to the second plasma chamber configured to provide an RF bias voltage to the second plasma chamber to generate the second plasma.

15. A method of implanting a substrate in an ion implantation apparatus, comprising:

generating a first plasma within a first plasma chamber in response to an introduction of a first gas;

generating a second plasma within a second plasma chamber in response to an introduction of a second gas;

applying an extraction voltage to the first plasma chamber to accelerate ions within the first plasma;

electrically isolating the first plasma chamber from an extraction electrode disposed between the first plasma chamber and the second plasma chamber;

applying a voltage lower than the extraction voltage to the extraction electrode and the substrate disposed with the second plasma chamber, the accelerated ions directed toward the substrate through an aperture in the extraction electrode during application of the extraction voltage for implantation therein.

16. The method of claim **15** wherein the voltage applied to the extraction electrode, the second plasma chamber and the substrate is at ground.

17. The method of claim **15** further comprising controlling a trajectory of the ions toward the workpiece by providing the extraction electrode with a curved profile proximate the aperture.

18. The method of claim **15** further comprising accelerating the ions across a sheath defined between a boundary of the first plasma within the first plasma chamber and the extraction electrode.

19. The method of claim **15** further comprising:

regulating the first plasma chamber at a first pressure; and

regulating the second plasma chamber at a second pressure, the first pressure being greater than the second pressure.

20. The method of claim **19** wherein the first pressure in the first plasma chamber is regulated by a first pumping system connected to the first plasma chamber and the second pressure in the second plasma chamber is regulated by a second pumping system connected to the second plasma chamber.

21. The method of claim **15** wherein the first gas and the second gas are different, the first gas configured to provide

dopant ions, and the second gas configured to provide an inert plasma as the second plasma within the second plasma chamber.

* * * * *