US 20150136732A1

(19) **United States**

(12) **Patent Application Publication**

TANG et al.

(10) **Pub. No.: US 2015/0136732 A1**

(43) **Pub. Date: May 21, 2015**

(54) **METHOD AND APPARATUS FOR FILM DEPOSITION**

(71) Applicant: **Applied Materials, Inc.**, Santa Clara, CA (US)

(72) Inventors: **Xianmin TANG**, San Jose, CA (US); **Ludovic GODET**, Sunnyvale, CA (US); **Guojun LIU**, San Jose, CA (US); **Jing TANG**, San Jose, CA (US); **Phillip STOUT**, Santa Clara, CA (US); **Rong TAO**, San Jose, CA (US)

(21) Appl. No.: **14/547,702**

(22) Filed: **Nov. 19, 2014**

Related U.S. Application Data

(60) Provisional application No. 61/907,109, filed on Nov. 21, 2013.

Publication Classification

(51) **Int. Cl.**

C23C 16/56	(2006.01)
C23C 14/50	(2006.01)
C23C 16/458	(2006.01)
C23C 14/00	(2006.01)

(52) **U.S. Cl.**

CPC ***C23C 16/56*** (2013.01); ***C23C 14/0005*** (2013.01); ***C23C 14/505*** (2013.01); ***C23C 16/4584*** (2013.01)

(57) **ABSTRACT**

A method and apparatus for depositing films on a substrate is described. The method includes depositing a film on a substrate with feature formed therein or thereon. The feature includes a first surface and a second surface that are at different levels. A least a portion of the deposited film is removed by exposing the substrate to an ion flux from a linear ion source. The ion flux has an ion angular spread of less than or equal to 90 degrees and greater than or equal to 15 degrees. In certain embodiments, the feature can be a nanoscale, high aspect ratio feature such as narrow, deep trench, a small diameter, deep hole, or a dual damascene structure. Such features are often found in integrated circuit devices.

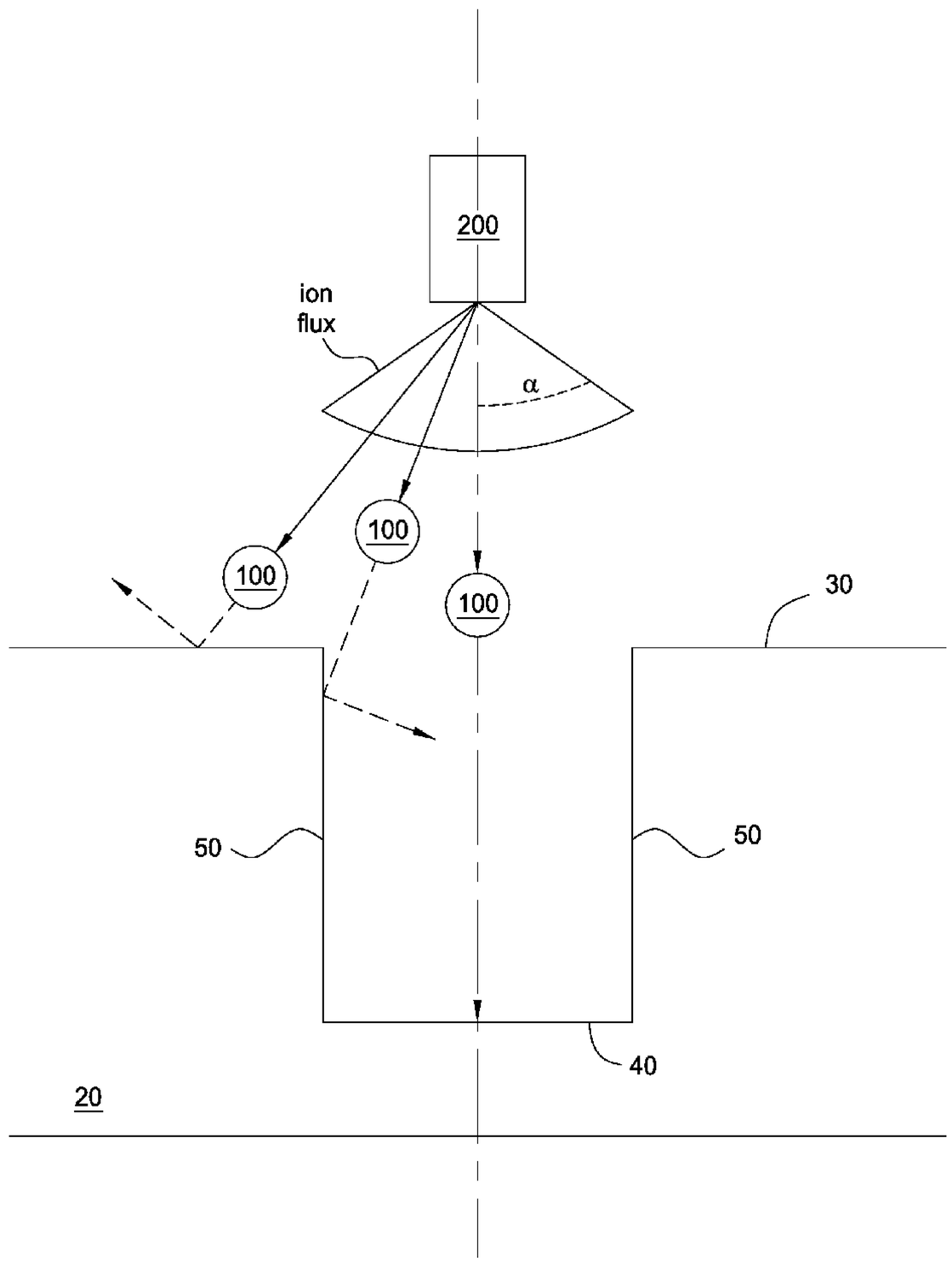

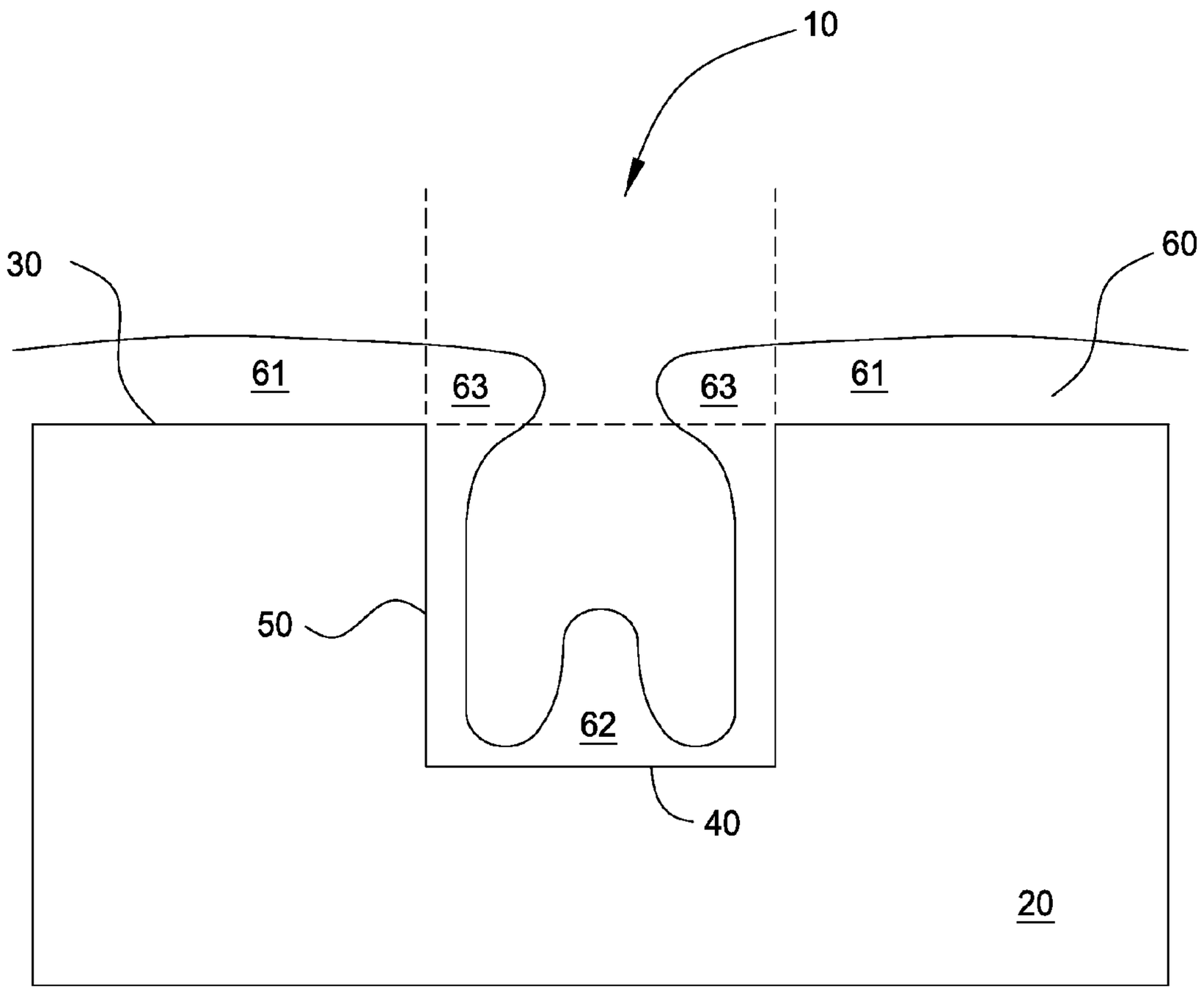

(Prior Art)

FIG. 1

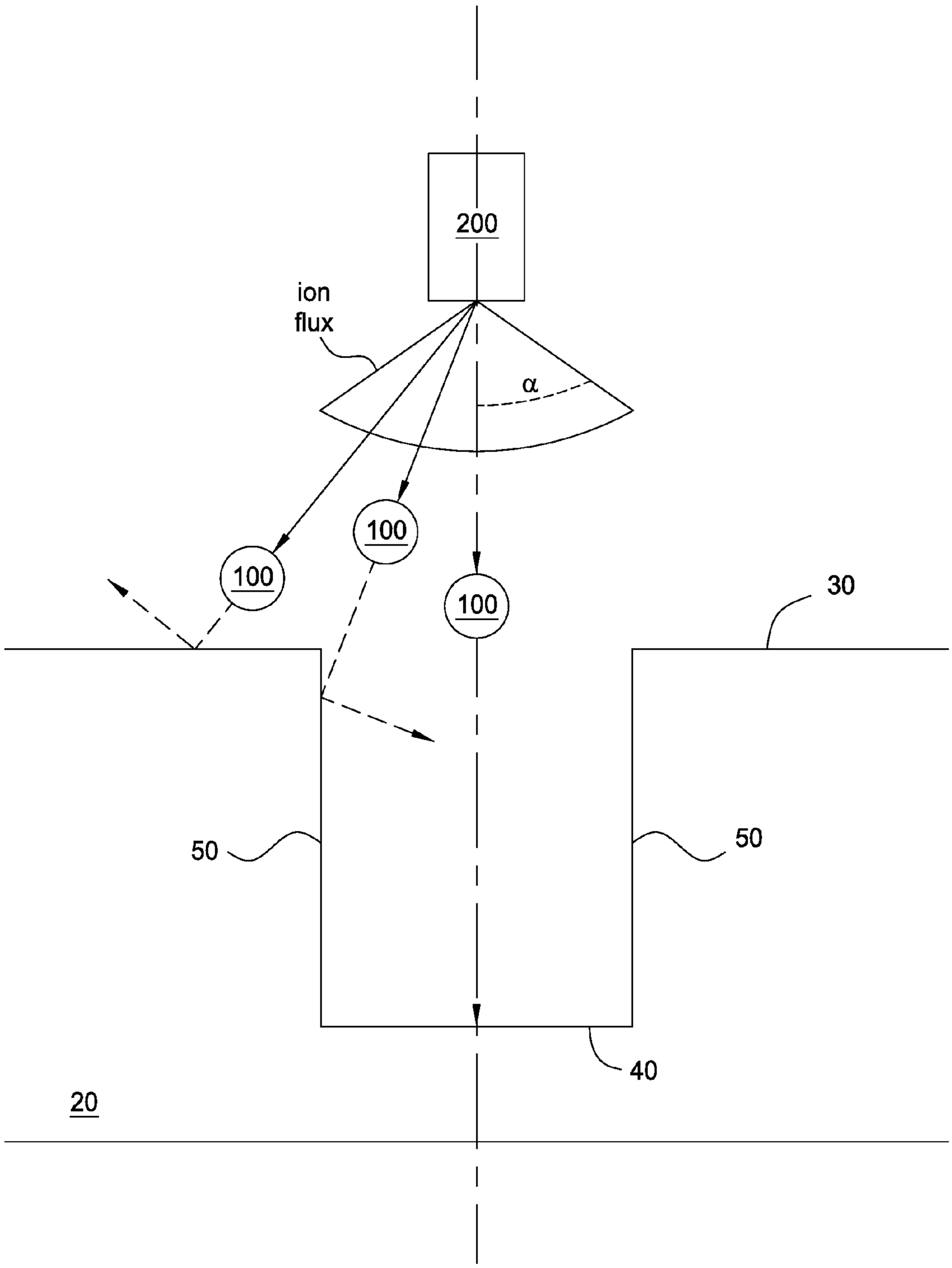

FIG. 2

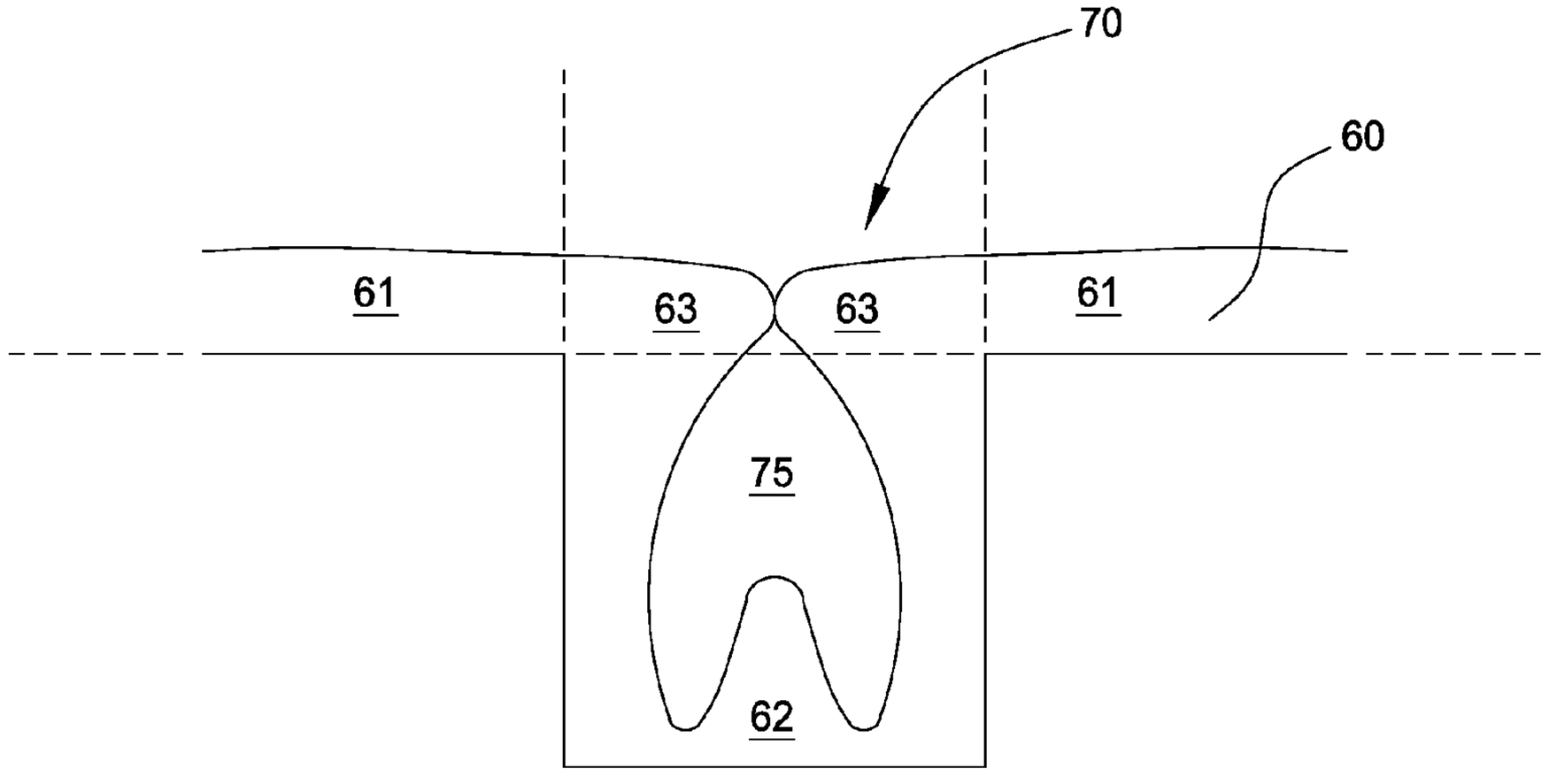

(Prior Art)

FIG. 3

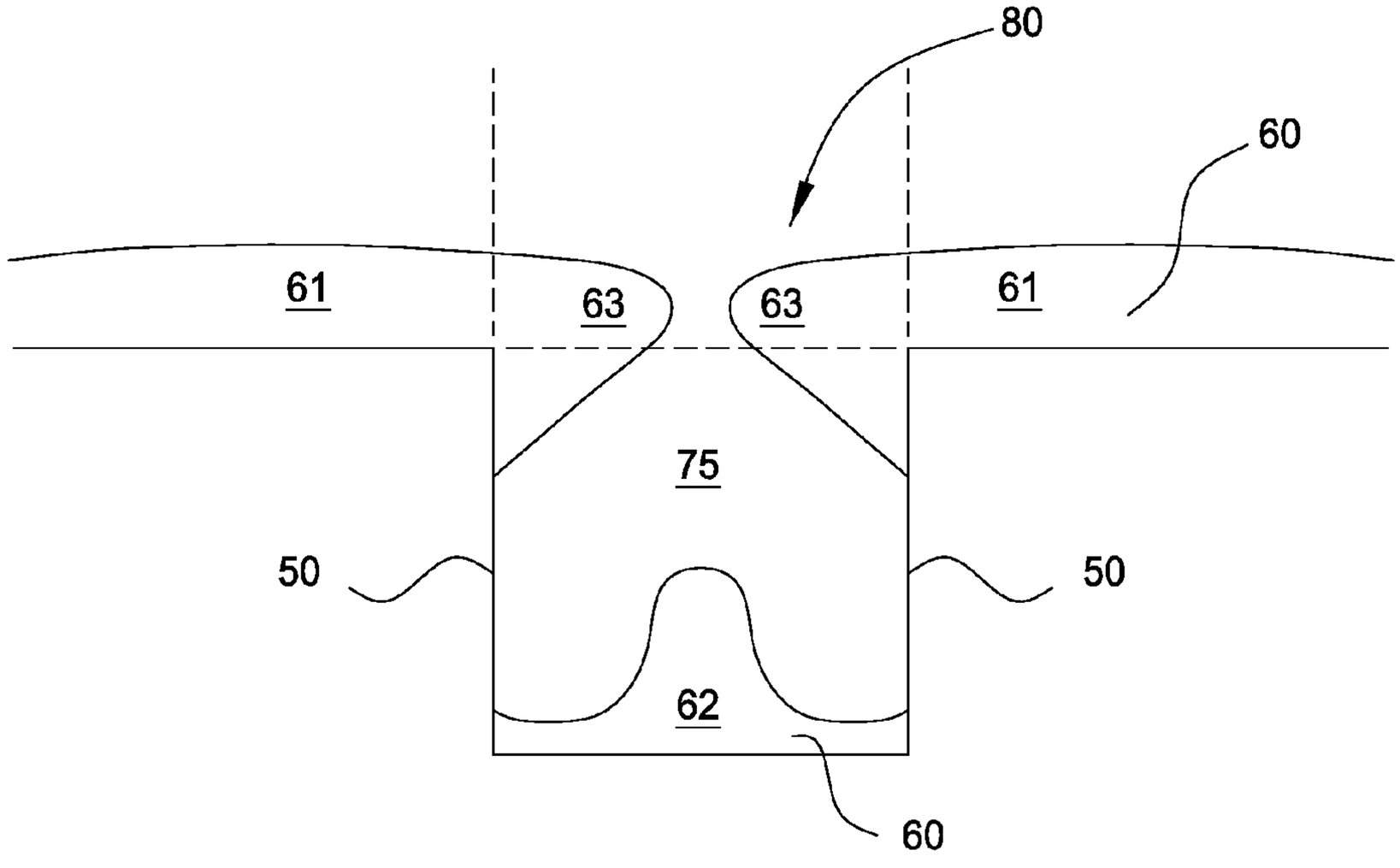

(Prior Art)

FIG. 4

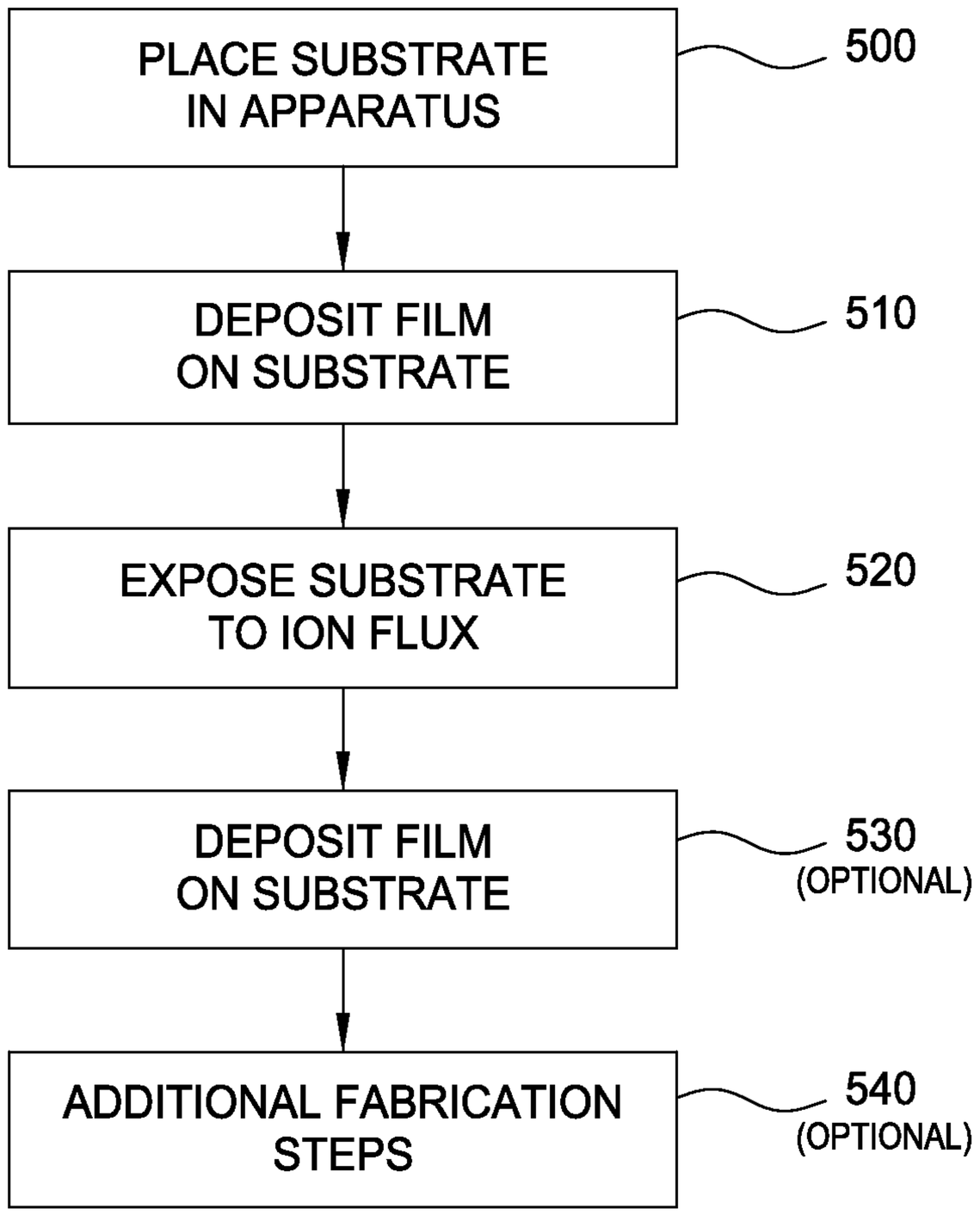
PLACE SUBSTRATE IN APPARATUS
500
DEPOSIT FILM ON SUBSTRATE
510
EXPOSE SUBSTRATE TO ION FLUX
520
DEPOSIT FILM ON SUBSTRATE
530
(OPTIONAL)
ADDITIONAL FABRICATION STEPS
540
(OPTIONAL)

FIG. 5

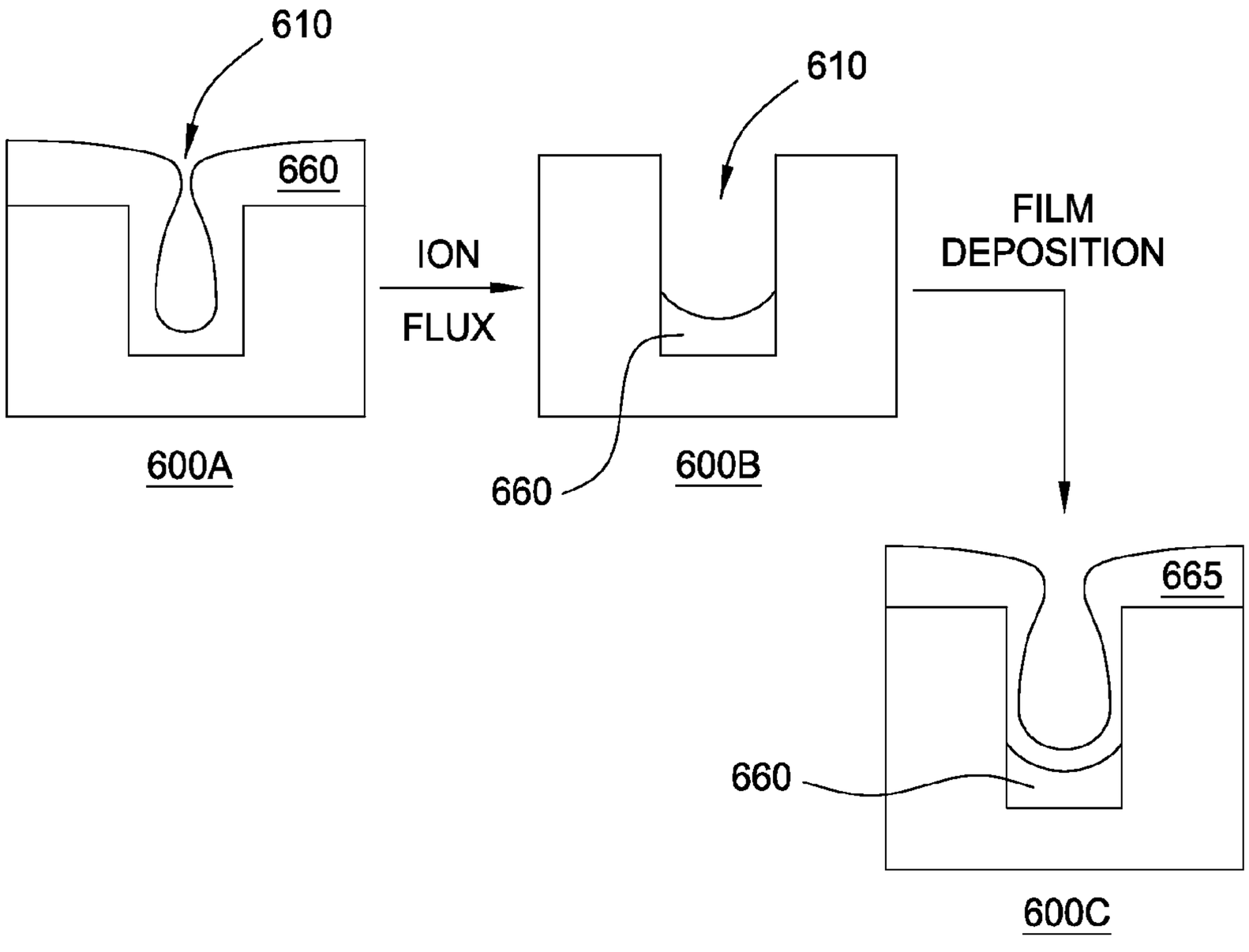
610
660
600A
ION
FLUX
610
660
600B
FILM
DEPOSITION
665
660
600C

FIG. 6

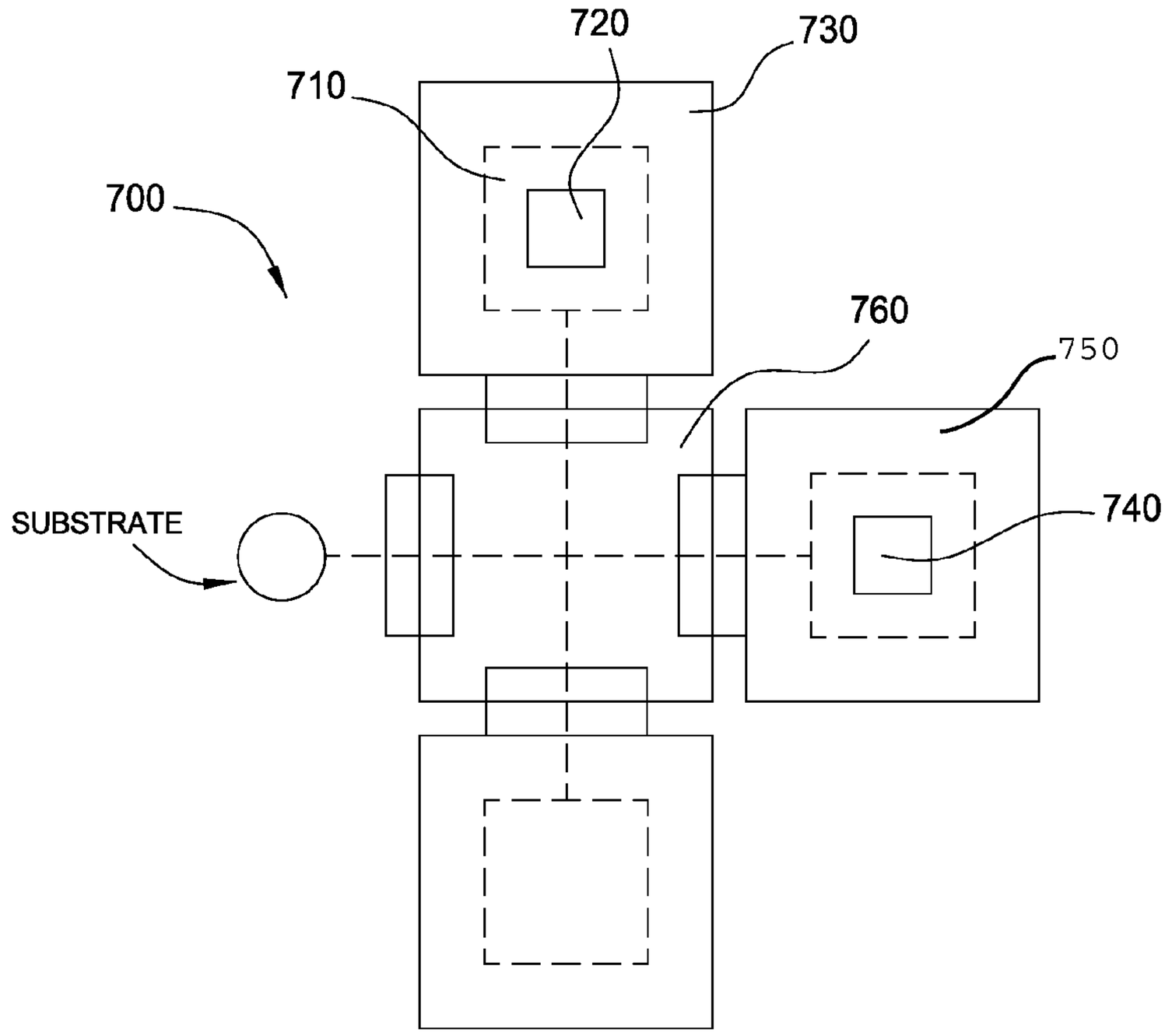

FIG. 7

METHOD AND APPARATUS FOR FILM DEPOSITION

CROSS-REFERENCE TO RELATED APPLICATIONS

[0001] This application claims priority to U.S. Provisional Patent Application Ser. No. 61/907,109, filed on Nov. 21, 2013, which herein is incorporated by reference.

BACKGROUND

[0002] 1. Field of the Disclosure

[0003] Embodiments of the present disclosure generally relate to a thin film deposition method and an apparatus for depositing thin films.

[0004] 2. Description of the Related Art

[0005] In the manufacture of microscale and nanoscale devices, thin films are deposited by a variety of means, such as physical vapor deposition (PVD), chemical vapor deposition (CVD), and atomic layer deposition (ALD). In general, standard thin film deposition techniques will have difficulty filling (or conformally coating) features on a target substrate when the features have high aspect ratios—that is, such features as narrow, deep trenches and small diameter, deep holes.

[0006] Standard deposition techniques have problems with so called "overhang" that become apparent when faced with high aspect ratio features at the microscale and nanoscale sizes found in, for example, integrated circuit devices. "Overhang" results when the upper surfaces of a feature in the substrate accumulate deposited material at a faster rate than the lower or bottom surfaces of the feature.

[0007] Overhang can result from a variety of causes, such as, there may be a localized depletion of reactive components at the lower surfaces that is caused by the relatively slow diffusion rate of reactive components through narrow openings in a CVD process. Overhang may also result from simple geometry effects such as, for example, volatized molecules in a PVD process will be more likely to impact the upper surfaces of a feature before reaching the lower surfaces because the upper surfaces are between the PVD source and the lower surfaces. But whatever the specific causes, severe overhang may result in a failure to completely fill a feature (or in malformed conformal coatings) if the deposited material in the overhang extends from adjacent sidewalls to close the opening or otherwise significantly shield the lower surfaces from the deposition process.

[0008] The severity of overhang during deposition may be somewhat mitigated by optimization of process conditions or tool parameters, such as adjusting chemical precursor pressures or improving linearity of the impinging ions being deposited, and, in general, the amount of overhang is a function of deposited film thickness. But it may not always be possible to simply reduce the deposited film thickness and still achieve desired film properties (e.g., insulating properties) or film quality characteristics (e.g., a lack of "pinholes"). Thus, there is a need in the art to deposit material in high aspect ratio features at the microscale and nanoscale without defects caused by overhang.

SUMMARY

[0009] The present disclosure describes a method of forming a film that includes depositing a film on substrate having a feature with a first surface at a first level and a second surface at a second level, which is not the same as the first level, then removing a portion of the deposited film by exposing the substrate to an ion flux from a linear ion source having a tailored ion angular spread of less than or equal to 90 degrees and greater than or equal to 15 degrees. The ion angular spread is measured from a line approximately normal to the substrate.

[0010] In certain embodiments, the feature in the substrate can include an opening at the first level and a bottom surface at the second level. The distance between the first and second levels can be greater than or equal to a width of the opening. The feature can be, for example, a trench, a contact hole, a via, a multilevel feature (e.g., dual damascene structure), or any patterned feature on the wafer on which a film may be deposited.

[0011] In some embodiments, the ion flux may be scanned or rastered across the substrate. In other embodiments, the entirety (or substantially all) of the substrate may be exposed to the ion flux simultaneously. The ion flux may be or may include argon ions.

[0012] The process used to deposit the film on the substrate can be, for example, a physical vapor deposition process, a chemical vapor deposition, process, or an atomic layer deposition process. Combinations of these methods may be used to form the film and/or various techniques such as plasma enhancement or radio frequency (RF) assistance can be incorporated in the deposition process.

[0013] A thin film deposition apparatus including a substrate support for supporting a substrate and a linear ion source having an ion angular spread that can be tailored to be less than or equal to 90 degrees and greater than or equal to 15 degrees is also described. The ion source of the apparatus provides a flux of ions towards (or directed towards) the substrate on the substrate support. The flux of ions removes at least a portion of the film deposited on the substrate.

[0014] The substrate support can be configured to rotate the substrate. In some embodiments, the flux of ions may be scanned across the substrate such that only a portion of the substrate is exposed to the flux of ions at any one time.

[0015] Additional embodiments include a deposition apparatus comprising a vacuum chamber and a substrate support therein. A substrate placed on the substrate support can include a feature having a first surface at a first level and a second surface substantially parallel to the first surface at a second level that is not the same as the first level. This deposition apparatus may further include a deposition system connected to or within the vacuum chamber. The deposition system can be configured to deposit a film on the substrate's first and second surfaces. The deposition system may be, for example, a physical vapor deposition system, a chemical vapor deposition system, and/or atomic layer deposition system. A linear ion source that can have a tailored ion angular spread of less than or equal to 90 degrees and greater than or equal to 15 degrees is included in the deposition apparatus. The linear ion source can be configured to provide a flux of ions towards the substrate on the substrate holder and thereby remove at least a portion of the film deposited on the first surface.

BRIEF DESCRIPTION OF THE DRAWINGS

[0016] A more particular description of the disclosure, briefly summarized above, may be had by reference to example embodiments, some of which are illustrated in the appended drawings. It should be noted, however, that the appended drawings illustrate only typical embodiments and

are, therefore, not to be considered limiting of the scope of this disclosure, as other embodiments of the present disclosure may be equally effective. Additionally, the drawings are not intended to be to scale or to represent relative size ratios between depicted elements, components, portions, or parts. Depicted elements may be re-shaped, re-oriented, re-sized, and/or rearranged without necessarily departing from the scope of the presented disclosure.

[0017] FIG. **1** (prior art) depicts a feature exhibiting overhang formed in a substrate.

[0018] FIG. **2** depicts ions from an ion source impinging on a substrate at different angles and an ion angular spread distribution from a linear ion source.

[0019] FIG. **3** (prior art) depicts a high aspect ratio feature in a substrate exhibiting an overhang problem.

[0020] FIG. **4** (prior art) depicts a high aspect ratio feature having a malformed coating due to an overhang problem.

[0021] FIG. **5** is a flowchart of a method for depositing a thin film.

[0022] FIG. **6** depicts a substrate processed according to an embodiment.

[0023] FIG. **7** depicts a thin film deposition apparatus.

DETAILED DESCRIPTION

[0024] Rather than simply tuning processing conditions and tool parameters in attempt to mitigate overhang, it is possible to substantially reduce overhang in features formed in a substrate by preferentially removing material deposited on upper surfaces of a high aspect ratio feature as compared to material deposited on lower surfaces of the high aspect ratio feature. Material removal methods may include, for example, ion bombardment processes.

[0025] FIG. **1** depicts a feature **10** with a deposited film **60** exhibiting overhang. The feature **10** is formed in or on substrate **20**. The feature **10** may be, for example, a trench or a hole etched into substrate **20**. Alternatively, the feature **10** may be formed by an additive process by which material is selectively deposited on the substrate **20** to provide the feature **10**. Feature **10** has a first surface **30** and a second surface **40**. As depicted, the first surface **30** is an upper surface of feature **10** and the second surface **40** is a lower surface of the feature **10**.

[0026] Here, feature **10** is a nanoscale feature having a high aspect ratio. As used herein, "nanoscale" means less than or equal to 1000 nm (1 micron). "High aspect ratio feature" means that the ratio of the maximum depth of the feature to the minimum width of the feature is greater than or equal to one (1.0). For example, a trench having a width of 500 nm and a depth of 1000 nm would have an aspect ratio of 2.0 and thus, would be a high aspect ratio feature. Similarly, a contact hole having a diameter of 22 nm and a depth of 22 nm would have an aspect ratio of 1.0 and thus would also be an example of a high aspect ratio feature. A feature having a width/diameter of 25 nm and a depth of 100 nm would have an aspect ratio of 4.0 and thus would also be a high aspect ratio feature. A feature having a width/diameter of 22 nm and a depth of approximately 200 nm would have an aspect ratio of approximately 9.1 and thus would also be a high aspect ratio feature.

[0027] It should be noted, that many features formed on a substrate may appear more geometrically sophisticated than a feature with a single opening size and depth, but may be considered to be the incorporation of multiple features each with one opening size and depth. For example, a dual damascene feature may be considered to comprise a trench with a via at the trench bottom. Thus, a dual damascene structure having a trench width of 50 nm, a trench length of 200 nm, and depth (to trench bottom) of 100 nm and further including a via in the trench bottom surface that is an ellipse with a minor axis dimension of 50 nm, a major axis dimension of 70 nm, and depth of 60 nm would have an aspect ratio that is 3.2 (that is, (100 nm+60 nm)/50 nm=3.2).

[0028] The first surface **30** and second surface **40** of feature **10** are substantially parallel to each other, though either or both surfaces may also include surface roughness, be non-flat, have localized tilt, or faceting such that projections or extensions of these surfaces could result in intersection of the projected/extended surfaces. In this context, "substantially parallel" means the actual (not a projection or conceptual extension) first surface **30** and second surface **40** do not intersect to form a corner.

[0029] Feature **10** also has a sidewall **50** that extends between the first surface **30** and the second surface **40**. Sidewall **50** is not required to be, though it may be, perpendicular to either the first surface **30** or the second surface **40**. In general, overhang may be a greater problem the closer sidewall **50** is to perpendicular. Sidewall **50** may also form an undercut feature wherein an opening formed in the first surface **30** is narrower than second surface **40**—that is, sidewall **50** may angle in towards the middle of feature **10**.

[0030] Feature **10** when viewed from above (and in a direction normal to the first and second surfaces) may appear as a rectangular or other polygonal shape if feature **10** is a trench or trench-like structure. Feature **10** may appear as a square, a circle, or an ellipsis from above when feature **10** is a contact hole or a via. In general, the specific shape of the feature is not important, though the method is particularly useful for depositing films on substrates including high-aspect ratio features. High aspect ratio features have relatively narrow widths as compared to feature depths. Feature **10** may be comprised of various portions and only certain portions may have a high aspect ratio and the various portions need not have the same aspect ratio. In general, problems related to overhang become more noticeable at sub-micron dimensions (i.e., nanoscale dimensions), but these problems may be present at larger feature dimensions as well.

[0031] As a film **60** is deposited on substrate **20** with the intention of filling or coating feature **10**, a first portion **61** of the film **60** forms on the first (upper) surface **30** and a second (lower) portion **62** of film **60** forms on the second (lower) surface **40**. Film **60** may, for example, comprise a metal such as copper, titanium, or tantalum or any other material capable of being deposited on a substrate.

[0032] As discussed, a variety of factors related to deposition techniques or specific process parameters can cause the deposition rate of the first portion **61** of the film **60** to be greater than the deposition rate of the second portion **62**. Particularly important in this context is the aspect ratio of feature **10**.

[0033] At the nanoscale dimensions often found in semiconductor devices, there will be difficulty getting film precursors (whether reactive compounds or impinging ions or molecules) to the lower portions of a high aspect ratio feature. For example, as depicted in FIG. **2**, if impinging ions **100** generated by linear ion source **200** are not travelling perpendicular to the substrate **20**, the ions may hit the upper portions of sidewalls **50** before reaching the lower portion of sidewalls **50** or the lower surface **40**, and assuming some portion of the impinging ions deposit on the upper sidewalls (or are

deflected away from the lower sidewall), there will be fewer ions **100** hitting the bottom surface **40** the lower portions of sidewalls **50**.

[0034] Overhang may also result because vapor-phase diffusion of reactive precursors into the narrow opening of a high aspect ratio feature is relatively slow such that the concentration of precursors at the upper and lower surfaces may be different during the deposition process. This may result in incomplete feature filling or malformed conformal coatings.

[0035] In a reactive deposition process, the concentration of precursors at the upper surface **30** may be (or substantially approach) the bulk concentration of precursors in a deposition chamber, while the concentration at the lower surface **40** may be substantially lower than the bulk concentration due the restricted movement of precursor molecules through the very small opening in the upper surface **30**. If the opening in the upper surface **30** is less than the mean free path (λ) of the precursor molecules, a Knudsen-type diffusion process may be operative during deposition which may result in different concentrations (resulting from a generally preferential sorting for smaller molecules through such a narrow opening) for precursor molecules at the lower surface. Furthermore, reactive molecules may be depleted by reactions with the upper materials before they reach the lower surface.

[0036] FIG. **2** also depicts the ion angular spread (α) of an ion flux generated by a linear ion source **200**. The ion angular spread (α) is measured from a centerline substantially normal to substrate **20**. In general, an ion flux with an ion angular spread of α includes ions traveling at all angles between $\pm\alpha$, though the number of ions traveling at each specific angles need not be the same as the other angles. The ion angular spread can have various distribution functions such that, for example, high angle ions (e.g., $|\alpha| \geq 45$ degrees) are more or less numerous than low angle ions ($|\alpha| < 45$ degrees). Additionally, the energy of the ions at different angles may be different or have a different distribution of energies. It should be noted that the specific angle of incidence of the ions **100** on the substrate **20** depends on the local topography of the substrate **20**.

[0037] For these and other reasons, film **60** will tend to form an overhang portion **63** as it is deposited on the substrate **20**. As the overhang portion **63** extends into the opening between the sidewalls **50**, the sidewalls may be further shielded from impinging ions in an RF-assisted process or impinging molecules in a sputter process. Overhang portion **63** may prevent the filling of feature **10** with the deposition material and result in the formation of unintended voids in feature **10** (see FIG. **3**).

[0038] If a conformal film deposition is desired, overhang portion **63** may cause gaps or thickness variations in the film deposited on the surfaces of feature **10** because, in general, if the surfaces of feature **10** are exposed to different processing conditions (e.g., different molecule incidence rates, different precursor concentrations, etc.), a perfectly conformal film will not form in on these surfaces.

[0039] Feature **70**, depicted in FIG. **3**, has been incompletely filled by film **60** due to the formation of overhang portion **63** that has resulted in the formation of void **75**.

[0040] Feature **80**, depicted in FIG. **4**, has a malformed conformal film **60** caused by the formation of overhang portion **63** preventing incomplete coverage of sidewall **50**. Bottom portion **62** is separated from upper portion **61**.

[0041] In an embodiment of the present disclosure, a method of forming a thin film includes first depositing a thin film on a substrate. After this first deposition, a portion of the deposited film is removed by exposure to an ion flux from a linear ion source having an ion angular spread that can be tailored to be between 90 degrees and 15 degrees. The impinging ions provide a physical etching process which removes portions of the film exposed to the ion bombardment. Due to effects similar to those which produce overhang during a deposition process, the ion flux, which includes ions not incident perpendicularly to the substrate, provides a differential etch rate for material deposited on upper surfaces of feature **10** as compared to material deposited on the lower surfaces of feature **10**.

[0042] FIG. **5** is a flow chart of the process for forming a thin film on a substrate including a high aspect ratio feature formed therein or thereon. The high aspect ratio feature can be, for example, a trench with a width of approximately 50 nm, a depth of 100 nm, and a length of several microns (1×10^{-6} m). In other embodiments, the high aspect ratio feature can be a contact hole with, for example, a diameter of 22 nm and a depth of 50 nm. The substrate may have many different features of various shapes formed therein or thereon including some of which have a high aspect ratio and some of which do not.

[0043] In box **500**, a substrate **20** is place on a support substrate in a thin film deposition apparatus. The substrate **20** has a feature **10** formed therein. Feature **10** has a first surface **30** and a second surface **40**. First surface **30** and second surface **40** are arranged at different levels in substrate **20**, but are substantially parallel to each other. As depicted in FIG. **1**, first surface **30** is on an upper surface of substrate **20** and second surface **40** is formed towards the interior portion of substrate **20**.

[0044] In box, a film **60** is deposited on substrate **20**. The film **60** can be deposited using, for example, physical vapor deposition methods and in this instance is intended to completely fill feature **10**. But as is common in the art, film **60**, as initially formed, has an overhang portion **63**. An upper portion **61** of film **60** forms on first surface **30** and a lower portion **62** of film **60** forms on second surface **40**. Lower portion **62** may also form on all or parts of sidewalls **50**.

[0045] Film **60** can be, for example, a metal such as copper that is electrically conductive and feature **20** may form part of wiring pattern for an integrated circuit device. In other embodiments, film **60** can be intended to be a conformal coating which is not intended to completely fill feature **20**, but would ideally form a coating of approximately constant thickness on surfaces **30** and **40** (and sidewalls **50**). A conformal film **60** could be used as, for example, a barrier layer to prevent electromigration from metal layers into dielectric layers.

[0046] In box **520**, the substrate **20** is exposed to an ion flux supplied by a linear ion source having an angular spread of less than or equal to 90 degrees and greater than or equal to 15 degrees. In box **520**, the ions can be, for example, argon ions or other ions of other atoms which are generally chemically inert, or substantially so, under the present processing conditions.

[0047] The breadth of the ion angular spread (as may be described by an ion angular distribution function) provides a differential removal rate for film deposited on the upper surfaces (e.g., first surfaces **30**) of the substrate and film deposited on the lower surfaces (e.g., second surfaces **40**) of the features in the substrate. That is, ions which are not incident to substrate in a perpendicular manner will generally not

reach the lower surfaces (e.g., surfaces covered with film portion **62**) of a high aspect ratio feature due to geometry effects, while ions that are incident to the substrate **20** in a perpendicular (or nearly so) manner may reach the lower surfaces of the high aspect ratio feature.

[0048] As a simple approximation, the removal rate of film **60** can be considered a direct function of the number of ions hitting the film per unit time (which may be referred to as an ion flux). Thus, the removal rate of a material (film portion **62**) on the lower surface of the high aspect ratio feature will be less than removal rate of material on the upper surfaces of the substrate because the material at the upper surface (e.g., film portion **61** and overhang portion **63**) will be subjected to ions impinging in a perpendicular (or nearly so) manner plus the ions incident on the substrate at other angles and the lower surfaces of the high aspect ratio feature will only be subjected to those ions incident on substrate at a perpendicular (or nearly so) angle and not those at other angles.

[0049] As the material on the upper and lower surfaces are substantially the same material, physical etch rates will be different due to the exposure to what is effectively different ion flux rates. The material etch rates may also be angularly dependent—that is ions impinging on the surfaces at different angles may be more or less effective in removing the material. In general, the angular distribution of the ion flux at the upper and lower surfaces will be different in that the percentage of ions hitting the respective surfaces at various angles will be different, but this effect may not be significant when the overall rate of ions hitting the respective surfaces is significantly different. Thus, for example film portion **61** and overhang portion **63** may be removed by the ion bombardment process more quickly than film portion **62**. Therefore, while overhang portion **63** may be substantially removed at least some of film portion **62** can remain.

[0050] The effect of the process associated with box **520**, described above, is depicted in FIG. **6** showing a pre-process substrate **600***a* and a post-process substrate **600***b*. Substrate **600***a* has a feature **610** having with a coating **660** with a substantial overhang into feature **610**. Substrate **600***b* depicts substrate **600***a* after exposure to an ion flux from a linear ion source with a tailored ion angular spread of less than or equal to 90 degrees and greater than or equal to 15 degrees.

[0051] In box **530**, an optional second deposition process is performed to generate a filled feature **10**. The second deposition process may be the same type process as the first deposition process used to generate initial film **660** or may be a different process type or a variant of the first deposition process. The same or different material as used to form film **660** may be deposited in this process. Box **520** may be repeated after box **530** if desired. FIG. **6** depicts a substrate **600***c* on which the process of box **530** has been performed. Film **665** has been deposited on substrate **600***c* over remaining portions of film **660** in process of box **530**. As stated, film **665** can be the same or different material used to form film **660**. Though not specifically depicted, substrate **600***b* can undergo various processes such as cleaning, annealing, and/or surface treatments prior to the deposition process of box **530**.

[0052] In general, the deposition and removal processes may be repeated to fill the feature in stages, but in many applications it may be sufficient to partially fill the feature rather than completely fill the feature. In other applications, the partial removal or paring of the overhang portion may be sufficient to generate a conformal or quasi-conformal coating necessary for subsequent processing. In any event, the deposition (box **530**) and removal processes (box **520**) may be performed once or any other number of times necessary to achieve the desired result.

[0053] Additionally, the removal process in box **520** may be conducted in a single stage or several stages. That is, the ion flux may be continuous or pulsed. Alternatively, in some embodiments only portions of substrate **600***a* are exposed to an ion flux at any given time because the size (beam diameter) of the ion source is less than the full size of substrate **600***a*. Thus, portions of substrate **600***a* may be exposed to multiple passes of the ion flux as the ion flux is scanned and re-scanned across the substrate **600***a*.

[0054] Furthermore, the conditions of the removal process in box **520** need not remain constant and may be varied. Such variations in process conditions may be continuous or in a step-wise manner. For example, in some embodiments, substrate **600***a* may be rotated during the process of box **520** and the speed of rotation can be varied. In other embodiments, the ion angular spread may be narrowed or widen during the process of box **520**, for example, at an initial process phase of box **520**, the ion angular spread may be relatively narrow then widened at a later phase of box **520**. It is also possible for the process in box **520** to include one or more pauses in ion flux exposure, for example, to control the temperature increase experienced by the substrate.

[0055] After the desired film or coating has been achieved, additional processing such as chemical mechanical polishing, electroplating, deposition of interlayer films, photolithographic pattern, or other processing which might be necessary to form a completed device may be conducted in optional box **540**.

[0056] In an embodiment of the present disclosure, deposition and removal may be performed in the same apparatus, though in other embodiments the deposition and removal may be performed in different apparatuses or in a series of different apparatuses such that a first deposition occurs in a first tool, a first removal occurs in a second tool, a second deposition occurs in a third tool, and so forth. The deposition and removal may also be performed in different chambers of the same apparatus, such as a multi-chamber tool depicted in FIG. **7**.

[0057] FIG. **7** depicts an example apparatus for depositing a film. Chamber **700** may be a vacuum chamber or a controlled-environment chamber that is not necessarily under vacuum. Various pumps, filters, gas feed lines, heating elements, and/or refrigeration elements maybe provided in association with chamber **700**, though these elements are not specifically depicted in FIG. **7**.

[0058] A substrate support **710** is located inside chamber **700**. The substrate support **710** is configured to support a substrate such as substrate **600***a* or substrate **20** during material deposition and removal. Substrate support **710** may be configured to rotate the substrate thereon and/or translate the substrate in horizontal plane. Substrate support **710** may also be capable of translating the substrate in a vertical direction. Substrates can be securely held on substrate support **710** with vacuum suction, electrostatic force, gravity, chemical adhesives, magnetic attraction, clips, clamps, pins, notches, support rings or similar means known in the art. Substrate support **710** may incorporate various components for heating and cooling the substrate.

[0059] A linear ion source **720** is provided inside or connected to a sub-chamber **730** such that a flux of ions having an ion angular spread of less than or equal to 90 degrees and

greater than or equal to 15 degrees can be provided in a direction towards the substrate. The ion angular spread from the linear ion source **720** can be controlled (tailored) to be less than or equal to 90 degrees and greater than or equal to 15 degrees. The projected shape (that is, the shape of the flux area at the substrate) of the ion flux from linear ion source **720** can be any shape or size. In some embodiments, the ion angular spread is preferably between 90 degrees and 60 degrees (inclusive). In some embodiments, the ions can be supplied with relatively low energy and achieve acceptable etching results.

[0060] While chamber **700** can incorporate components for providing an electrical bias to the substrate on substrate support **710**, in general, it is preferable that an alternating electrical current bias not be applied to the substrate during the ion flux processing used to remove the portions of deposited films that form overhanging film portions. High biasing may generate plasma sheaths across the substrate and inhibit removal. Large negative bias on the substrate may serve effectively to narrow the ion angle distribution by drawing wide-angle ions toward the substrate. A narrowing of the ion angular spread may be disadvantageous as it is the angular spread which provides the differential removal rates for different portions of the deposited film.

[0061] As further depicted in FIG. **7**, a deposition system **740** is included in chamber **700**. In this embodiment, deposition system **740** is provided in sub-chamber **750**. Deposition system **740** may be a physical vapor deposition system including, for example, a metallic target for forming a film on the substrate. The deposition system **740** may include components located outside of chamber **700**, though these are not specifically depicted. Deposition system **740** can be a chemical vapor deposition system or an atomic layer deposition system. The deposited film can be a conductive film, a semiconducting film, or an insulating film as required by the process.

[0062] Deposition system **740** and linear ion source **720** may be provided in different sub-chambers of chamber **700**, as depicted in FIG. **7**, or there may no sub-chambers in chamber **700**. If sub-chambers are provided, the substrate support **710** may comprise a track or conveyor belt system for transporting the substrate from sub-chamber to sub-chamber. A robotic arm or similar mechanism may be provided for moving substrates between sub-chambers and substrate support **710** may comprise separate wafer chucks in different sub-chambers. Sub-chambers **730** and **750** can be directly connected to each other or there may be an intervening transfer chamber **760** or chambers.

[0063] As mentioned, in some embodiments, removal of deposited films may be performed while the substrate is rotated relative to linear ion source. The substrate may be rotated at a constant rate and constant direction or either both the rate and direction can be varied. Alternatively the linear ion source or portions thereof can be rotated relative to the substrate to promote uniformity of ion exposure (dosing). The projected shape of the ion flux can be any shape achievable, e.g., circular, elliptical, polygonal, etc.

[0064] In other embodiments, the removal processing may be performed while the substrate is moved (translated) relative to the linear ion source. That is, the substrate may be moved along a conveyor belt mechanism or the like while the ion source remains at a fixed point. In other embodiments, the linear ion source or portions thereof can be translated relative to the substrate. That is, portions of the substrate can be scanned through the ion flux or the ion flux can be rastered across portions of the substrate.

1. A method of forming a film, comprising:
depositing a film on a substrate including a feature with a first surface at a first level and a second surface at a second level that is not the same as the first level; and
removing at least a portion of the film by exposing the substrate to an ion flux from a linear ion source having an ion angular spread of less than or equal to 90 degrees and greater than or equal to 15 degrees.

2. The method of claim **1**, wherein the feature includes an opening at the first level and a bottom surface at the second level, and a distance between the first level and the second level is greater than or equal to a width of the opening at the first level.

3. The method of claim **2**, wherein the feature is one of a trench, a via, a contact hole, and a dual damascene structure.

4. The method of claim **1**, wherein the depositing and the removing are performed repeatedly.

5. The method of claim **1**, wherein the ion flux includes argon ions.

6. The method of claim **1**, wherein the substrate is rotated during the removing.

7. The method of claim **1**, wherein the ion flux is scanned across the substrate during the removing.

8. The method of claim **1**, wherein depositing the film comprises at least one of a physical vapor deposition process, a chemical vapor deposition process, and an atomic layer deposition process.

9. The method of claim **1**, wherein the ion angular spread is between 90 degrees and 60 degrees.

10. The method of claim **1**, wherein the depositing and the removing occur in a single chamber.

11. A thin film deposition apparatus, comprising:
a substrate support configured to support a substrate; and
a linear ion source having a controllable ion angular spread distribution function, the linear ion source configured to provide a flux of ions having an ion angular spread less than or equal to 90 degrees and greater than or equal to 15 degrees towards the substrate on the substrate support and thereby remove at least a portion of a film deposited on the substrate.

12. The thin film deposition apparatus of claim **11**, wherein the substrate includes a feature having a first surface at a first level and a second surface substantially parallel to the first surface at a second level that is not the same as first level, and
the feature includes an opening at the first level and a bottom surface at the second level, and a distance between the first level and the second level is greater than or equal to a width of the opening at the first level

13. The thin film deposition apparatus of claim **11**, wherein the substrate support is configured to rotate the substrate.

14. The thin film apparatus of claim **11**, wherein the flux of ions is scanned across the substrate.

15. The thin film apparatus of claim **11**, wherein the film deposited on the substrate is deposited by at least one of a physical vapor deposition process, a chemical vapor deposition process, and an atomic layer deposition process.

16. The thin film apparatus of claim **11**, wherein the flux of ions includes argon ions.

17. A deposition apparatus, comprising:
a vacuum chamber;
a substrate support inside the vacuum chamber and configured to support a substrate that includes a feature having

a first surface at a first level and a second surface at a second level that is not the same as the first level;

a deposition system in the vacuum chamber and configured to deposit a film on the first surface and the second surface; and

a linear ion source having a controllable ion angular distribution function, the linear ion source configured to provide a flux of ions having an ion angular spread of less than or equal to 90 degrees and greater than or equal to 15 degrees towards the substrate on the substrate holder and thereby remove at least a portion of the film deposited on the first surface.

18. The deposition apparatus of claim **17**, wherein the substrate support is configured to rotate.

19. The deposition apparatus of claim **17**, wherein the flux of ions includes argon ions.

20. The deposition apparatus of claim **17**, wherein the ion angular spread is less than or equal to 90 degrees and greater than or equal to 60 degrees.

* * * * *