US 20150255243A1

(19) **United States**

(12) **Patent Application Publication**

GODET et al.

(10) **Pub. No.: US 2015/0255243 A1**

(43) **Pub. Date: Sep. 10, 2015**

(54) **GRAZING ANGLE PLASMA PROCESSING FOR MODIFYING A SUBSTRATE SURFACE**

(71) Applicant: **Applied Materials, Inc.**, Santa Clara, CA (US)

(72) Inventors: **Ludovic GODET**, Sunnyvale, CA (US); **Ellie Y. YIEH**, San Jose, CA (US); **Srinivas D. NEMANI**, Sunnyvale, CA (US); **Gary E. DICKERSON**, Gloucester, MA (US); **Svetlana B. RADOVANOV**, Brookline, MA (US); **Adam BRAND**, Palo Alto, CA (US)

(21) Appl. No.: **14/641,071**

(22) Filed: **Mar. 6, 2015**

Related U.S. Application Data

(60) Provisional application No. 61/949,841, filed on Mar. 7, 2014, provisional application No. 61/989,370, filed on May 6, 2014.

Publication Classification

(51) **Int. Cl.**

H01J 37/147	(2006.01)
H01J 37/08	(2006.01)
H01J 37/32	(2006.01)

(52) **U.S. Cl.**

CPC ***H01J 37/1477*** (2013.01); ***H01J 37/32733*** (2013.01); ***H01J 37/3211*** (2013.01); ***H01J 37/32697*** (2013.01); ***H01J 37/08*** (2013.01); *H01J 2237/334* (2013.01); *H01J 2237/1501* (2013.01); *H01J 2237/1512* (2013.01)

(57) **ABSTRACT**

Embodiments of the disclosure provide apparatus and methods for modifying a surface of a substrate using a plasma modification process. In one embodiment, a process generally includes the removal and/or redistribution of a portion of an exposed surface of the substrate by use of an energetic particle beam while the substrate is disposed within a particle beam modification apparatus. Embodiments may also provide a plasma modification process that includes one or more pre-planarization processing steps and/or one or more post-planarization processing steps that are all performed within one processing system. Some embodiments may provide an apparatus and methods for planarizing a surface of a substrate by performing all of the plasma modification processes within either the same processing chamber, the same processing system or within processing chambers found in two or more processing systems.

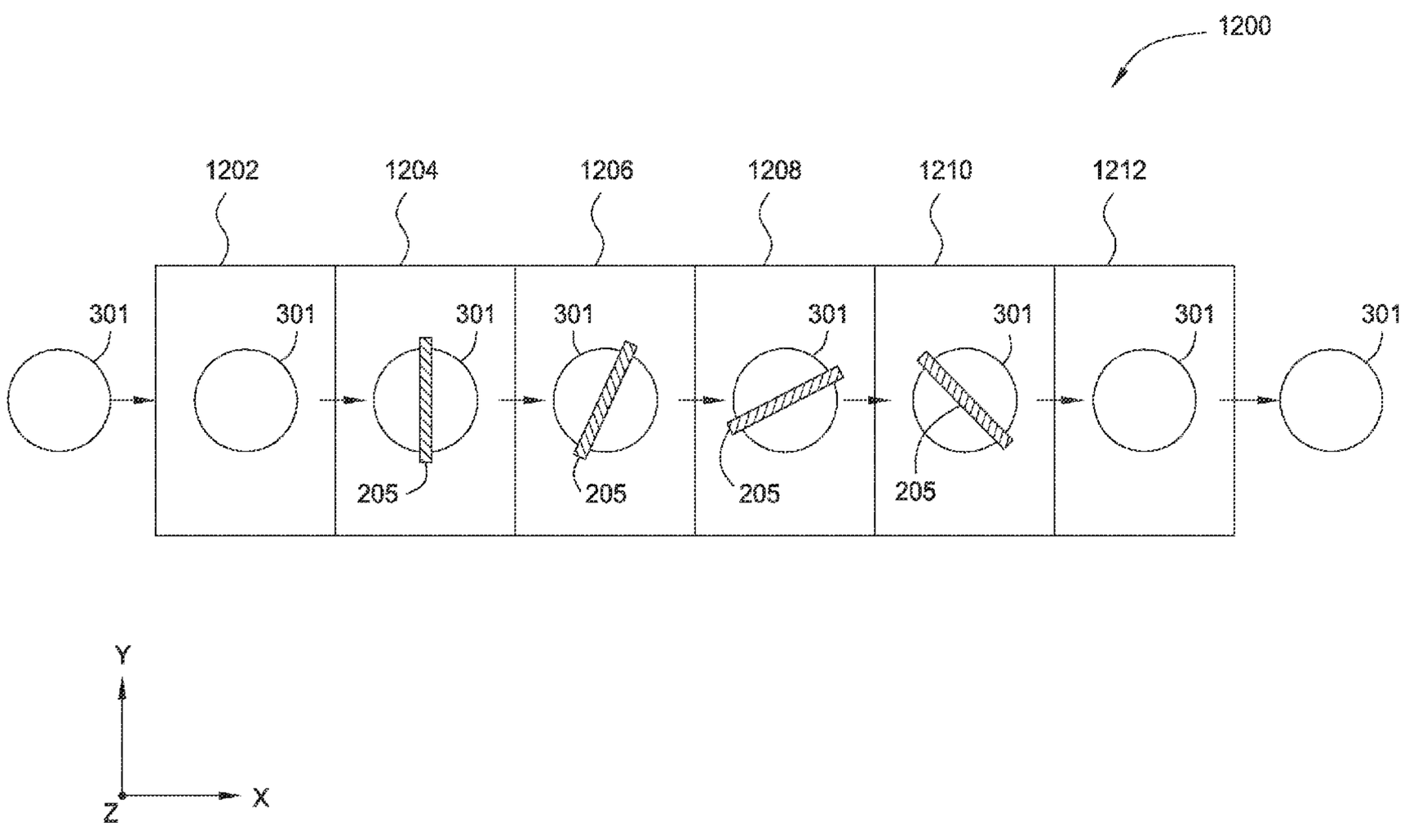

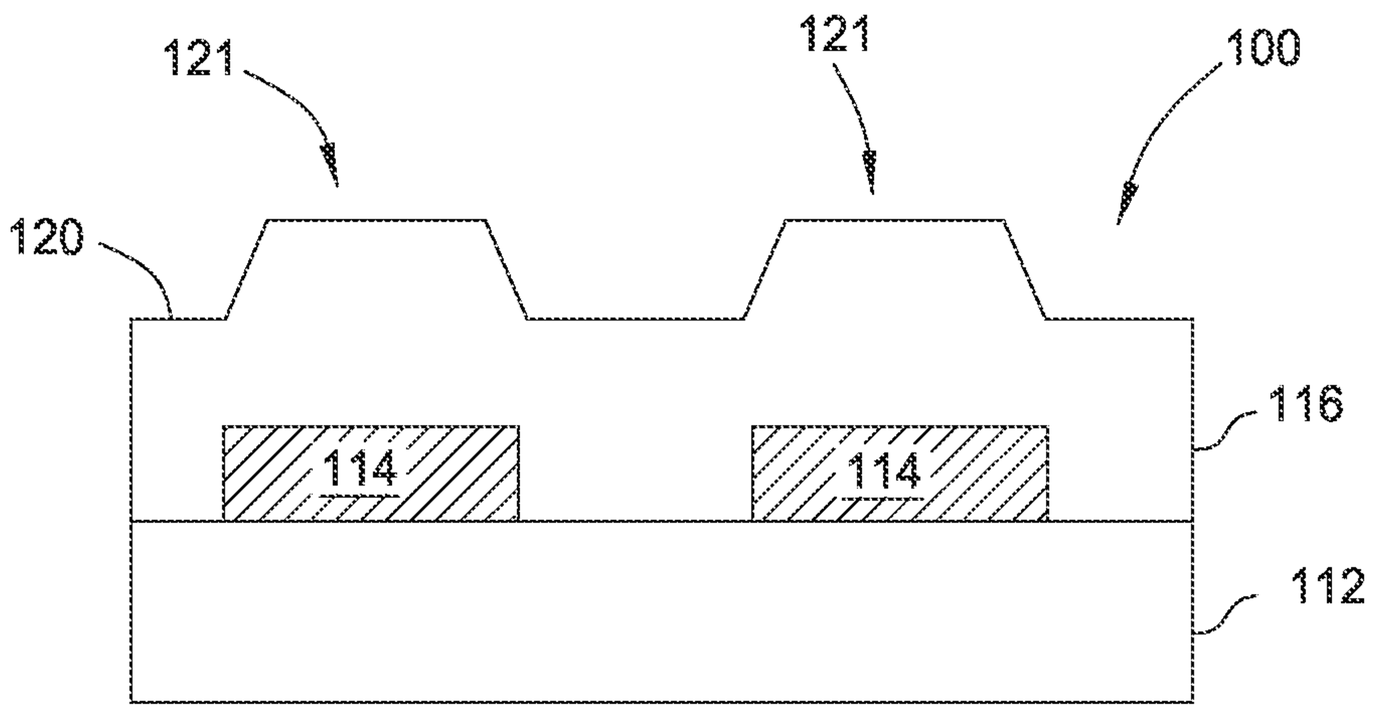

FIG. 1A
(PRIOR ART)

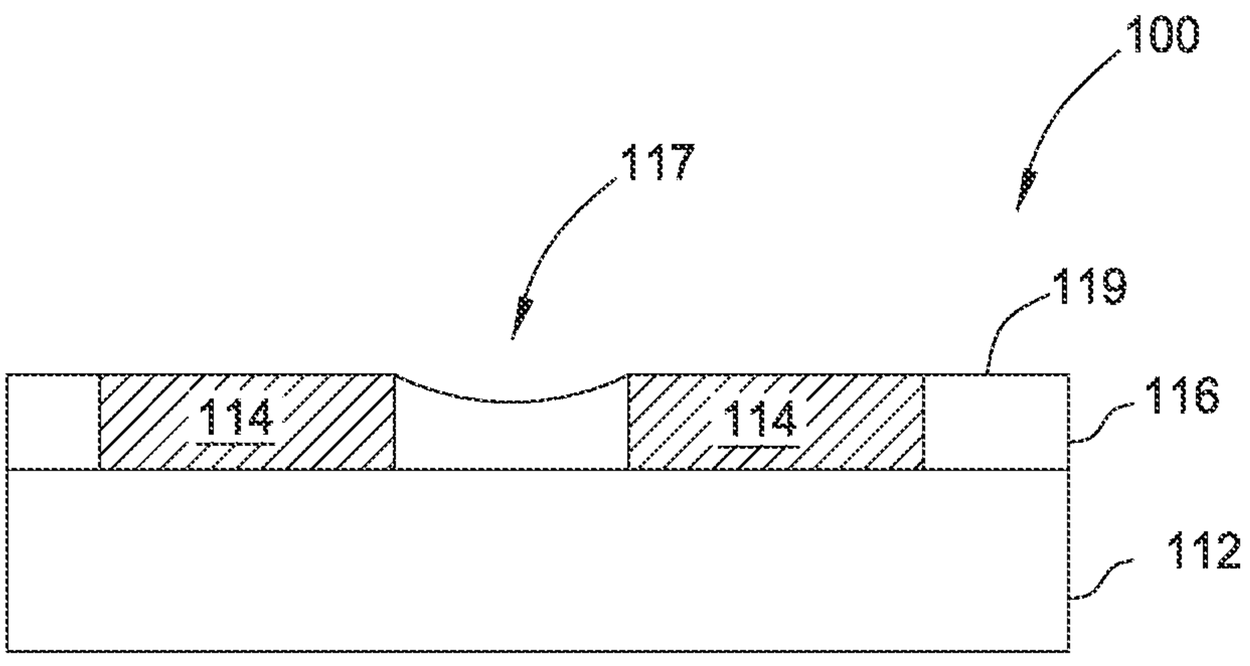

FIG. 1B
(PRIOR ART)

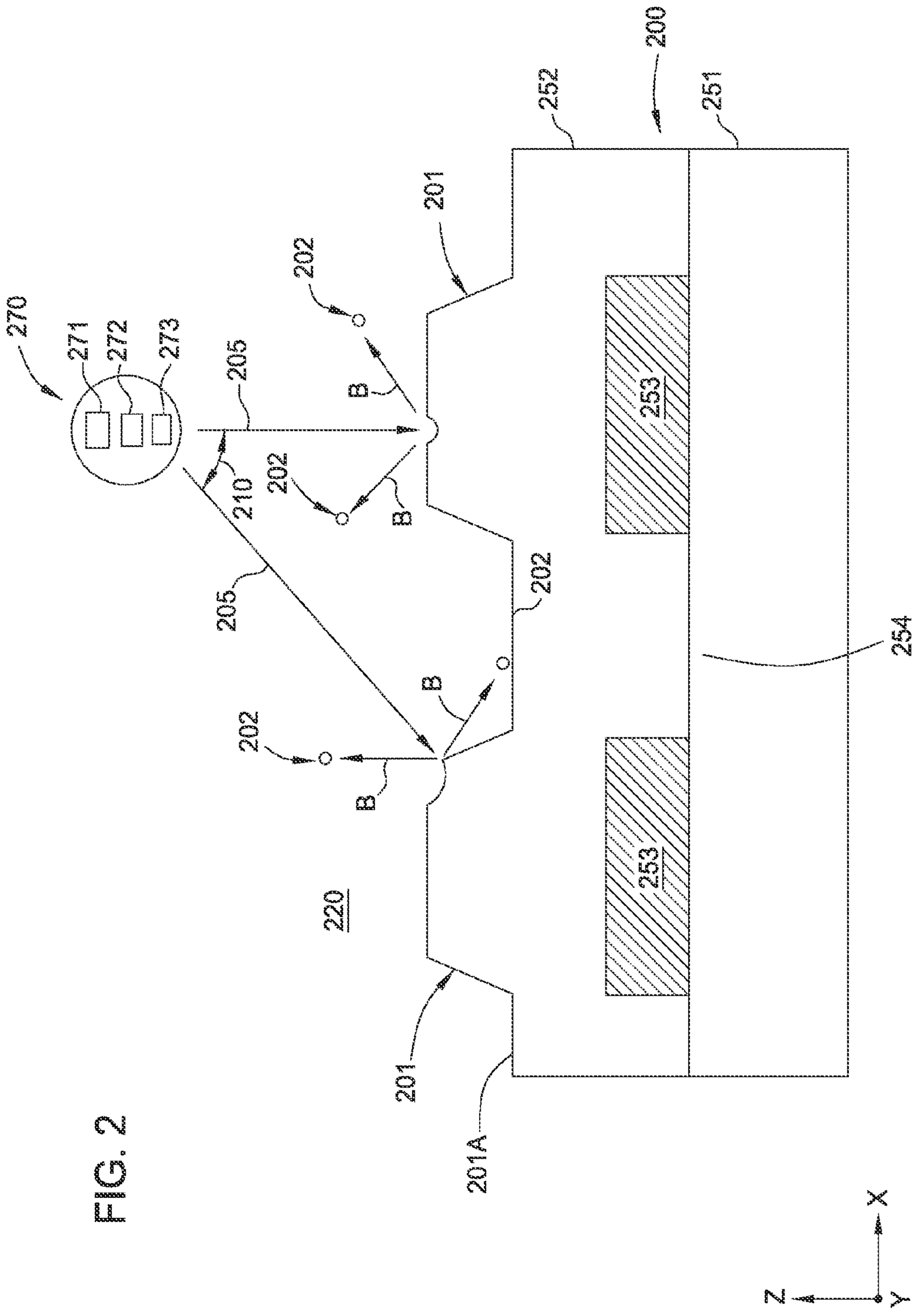
200
252
251
201
202
270
271
272
273
205
B
210
253
254
220
201A
X
Z
Y

FIG. 2

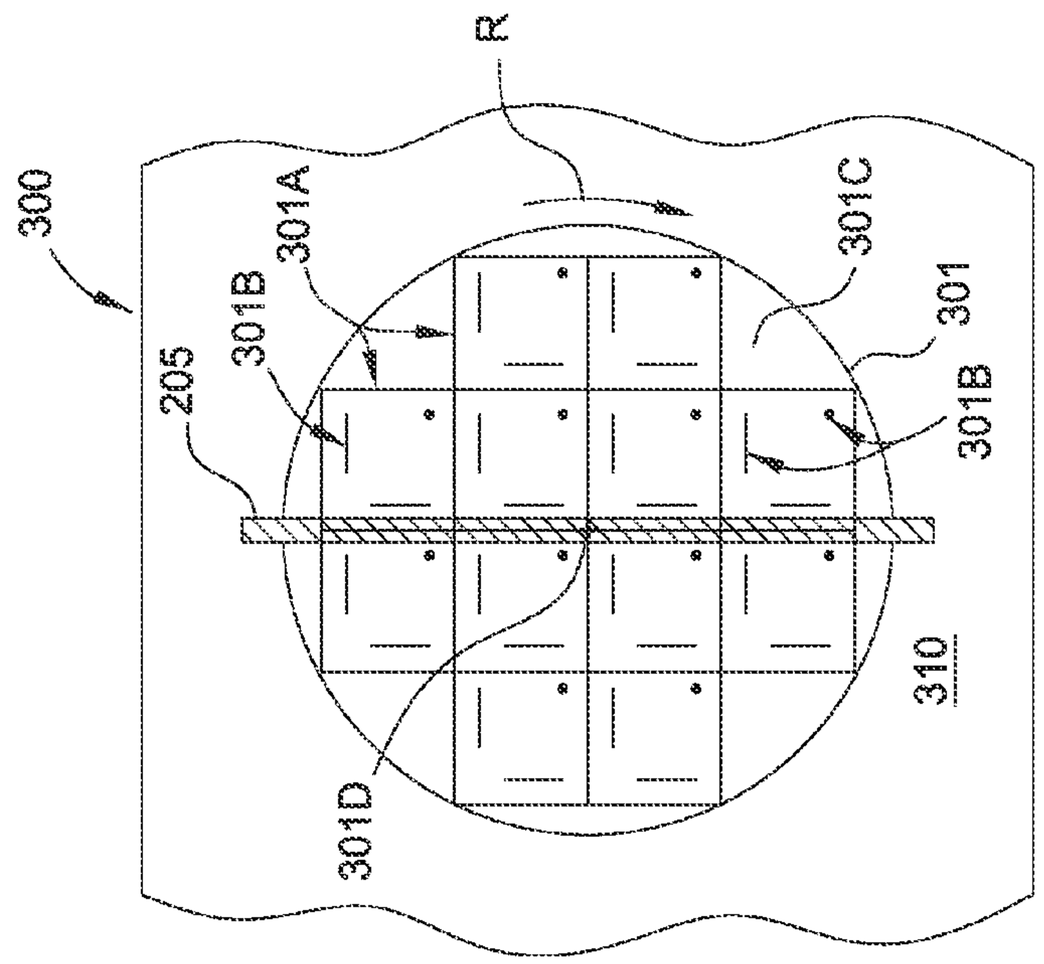
300
R
301A
301B
205
301C
301
301B
310
301D
X
Y
Z

FIG. 4

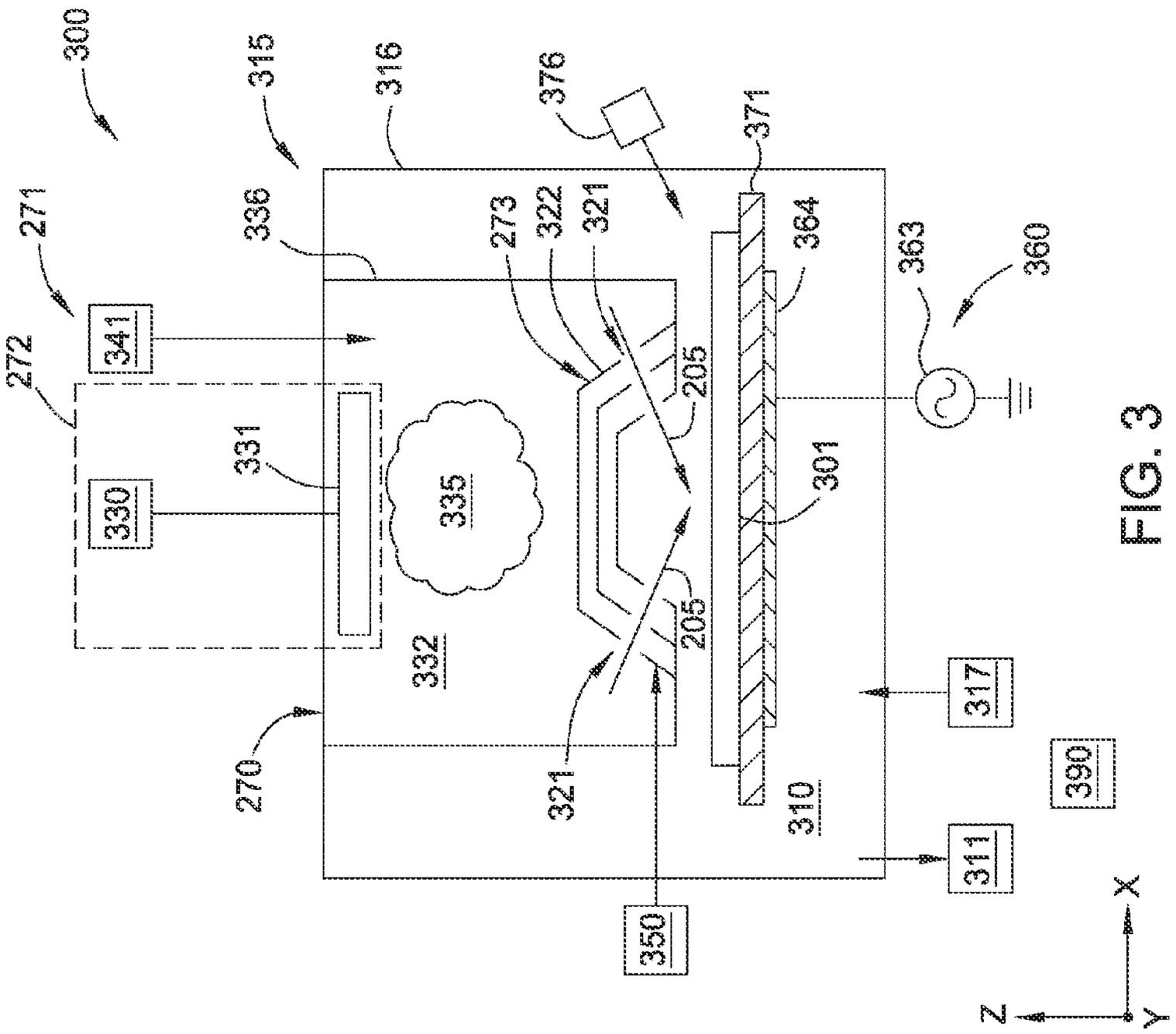
300
315
316
376
371
271
336
273
322
321
364
363
360
341
272
205
331
301
330
335
205
332
317
270
321
310
390
311
350
Z
Y
X

FIG. 3

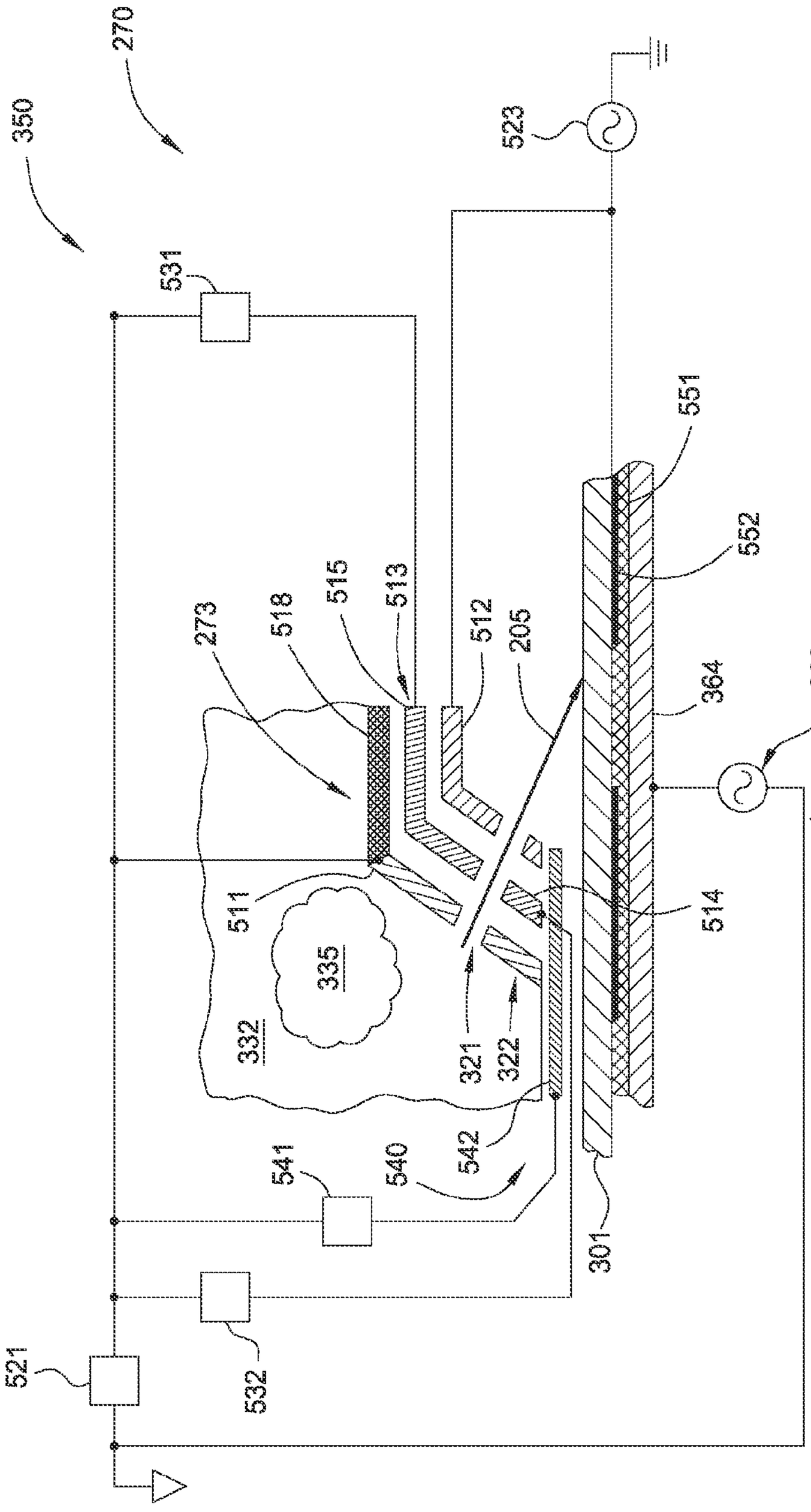
270
350
531
523
551
552
273
518
515
513
512
205
364
363
511
335
332
321
322
514
360
541
540
542
301
521
532

FIG. 5A

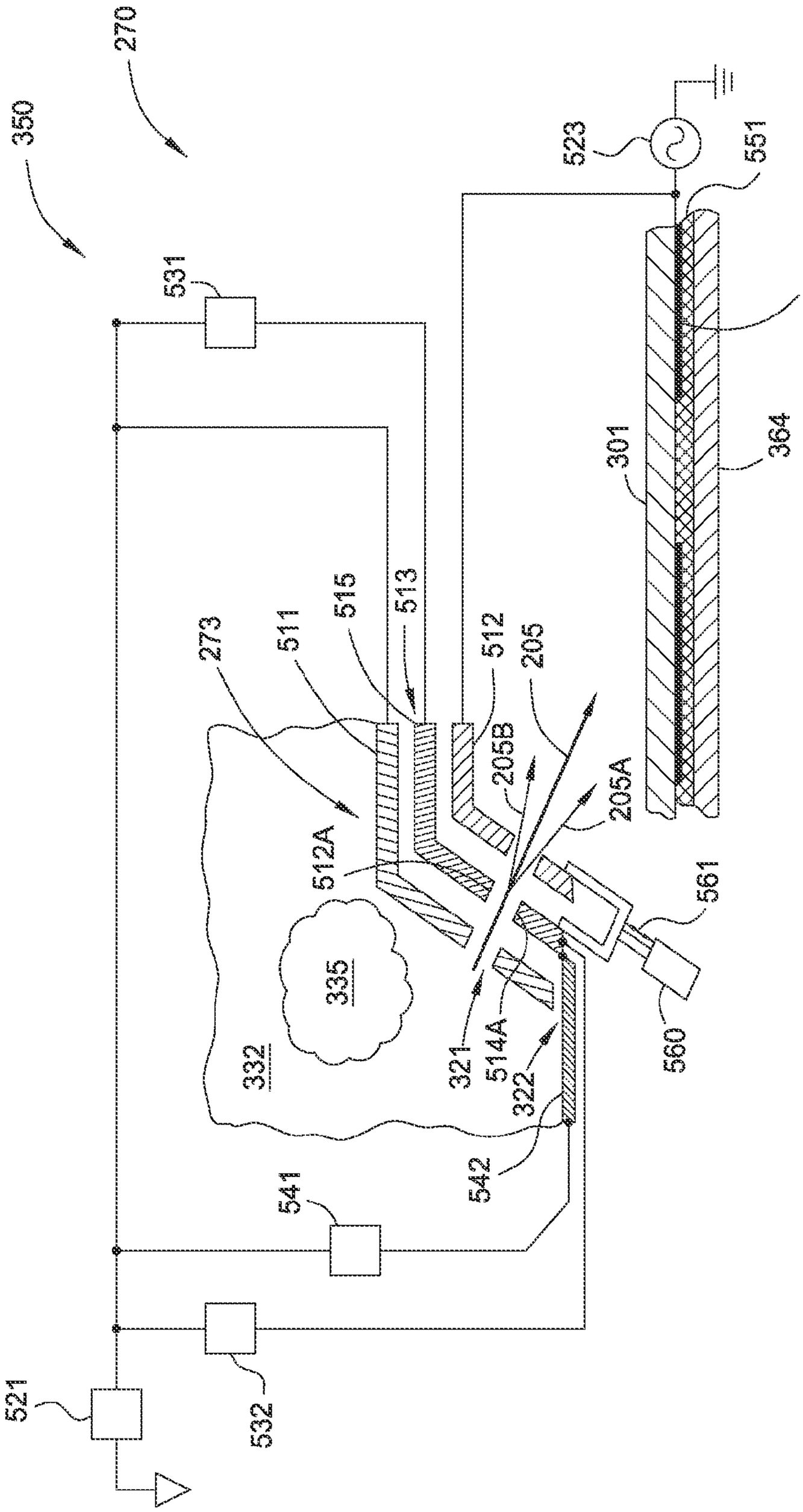
270
350
531
523
551
552
301
364
273
511
515
513
512
205
205B
205A
512A
561
335
332
321
514A
322
542
541
521
532
560

FIG. 5B

FIG. 6C

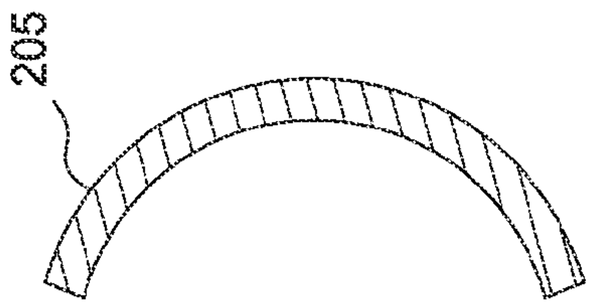

FIG. 6D

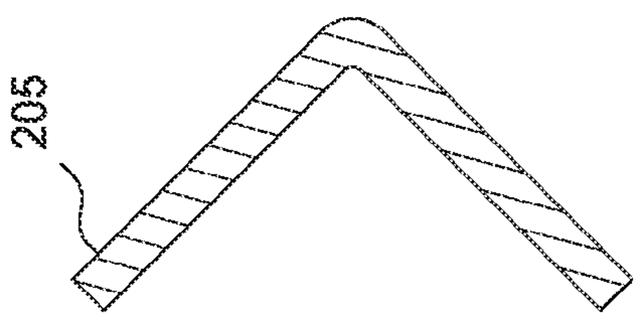

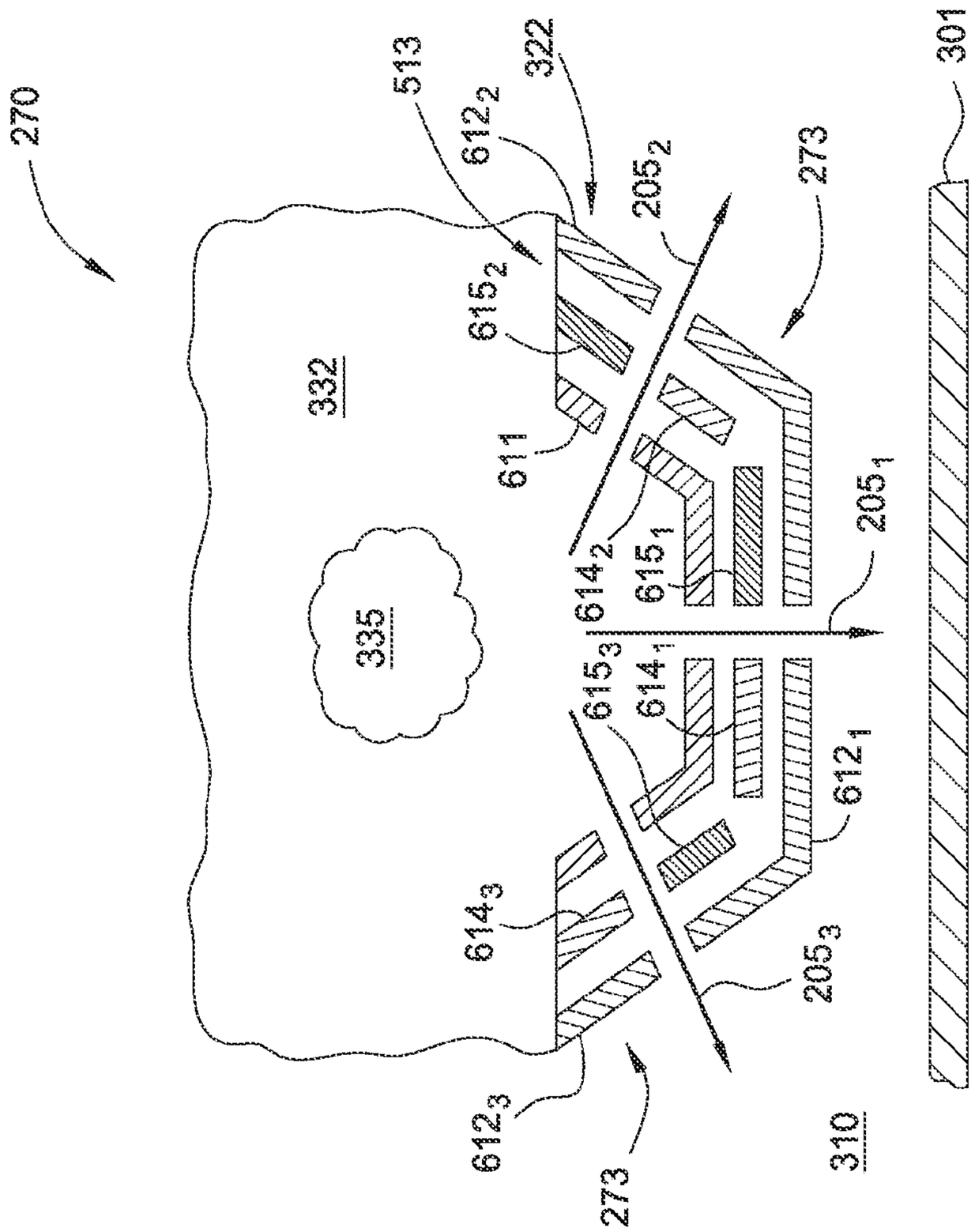

FIG. 6A

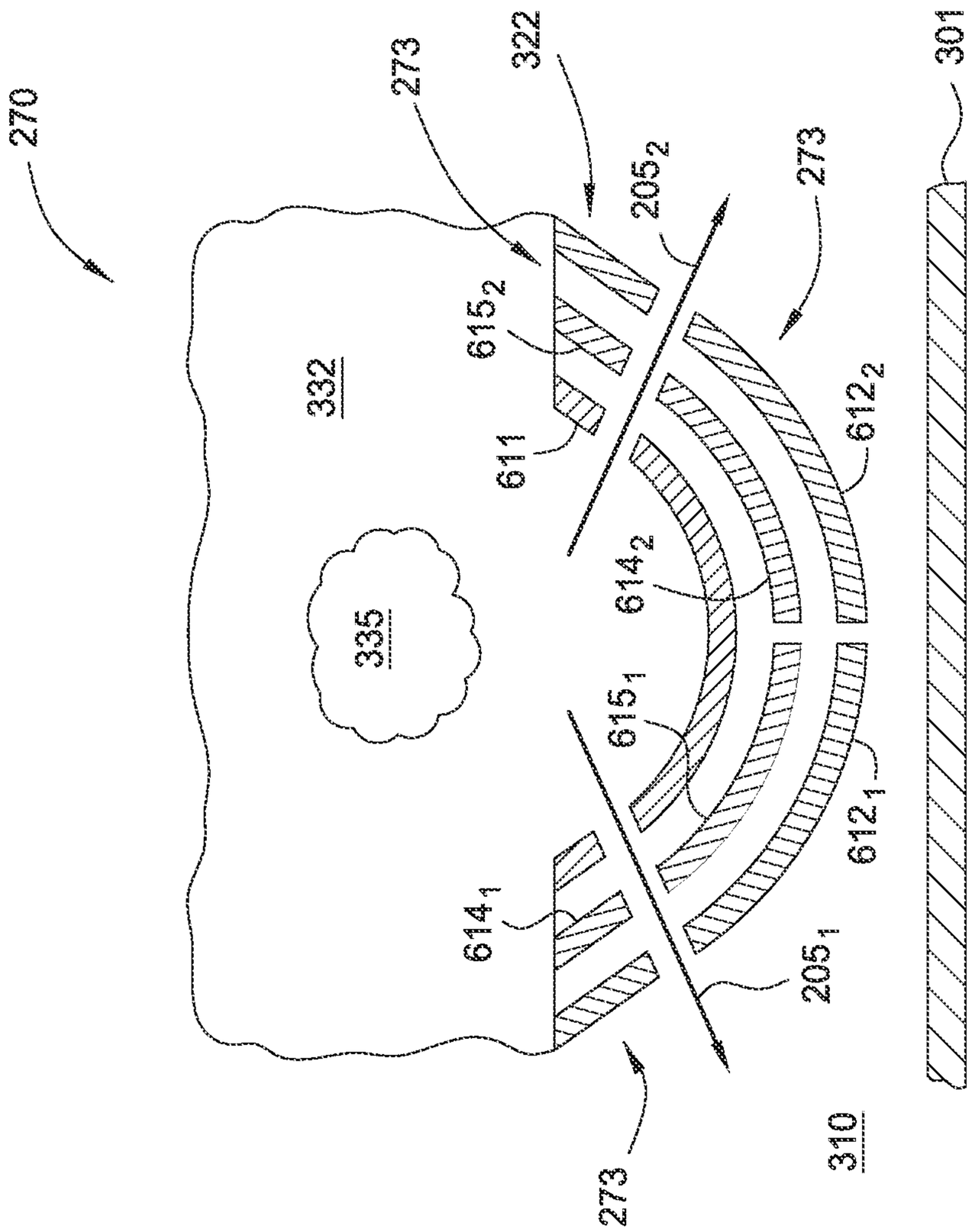
270
273
322
301
205_2
273
615_2
332
611
612_2
614_2
335
615_1
614_1
612_1
205_1
273
310

FIG. 6B

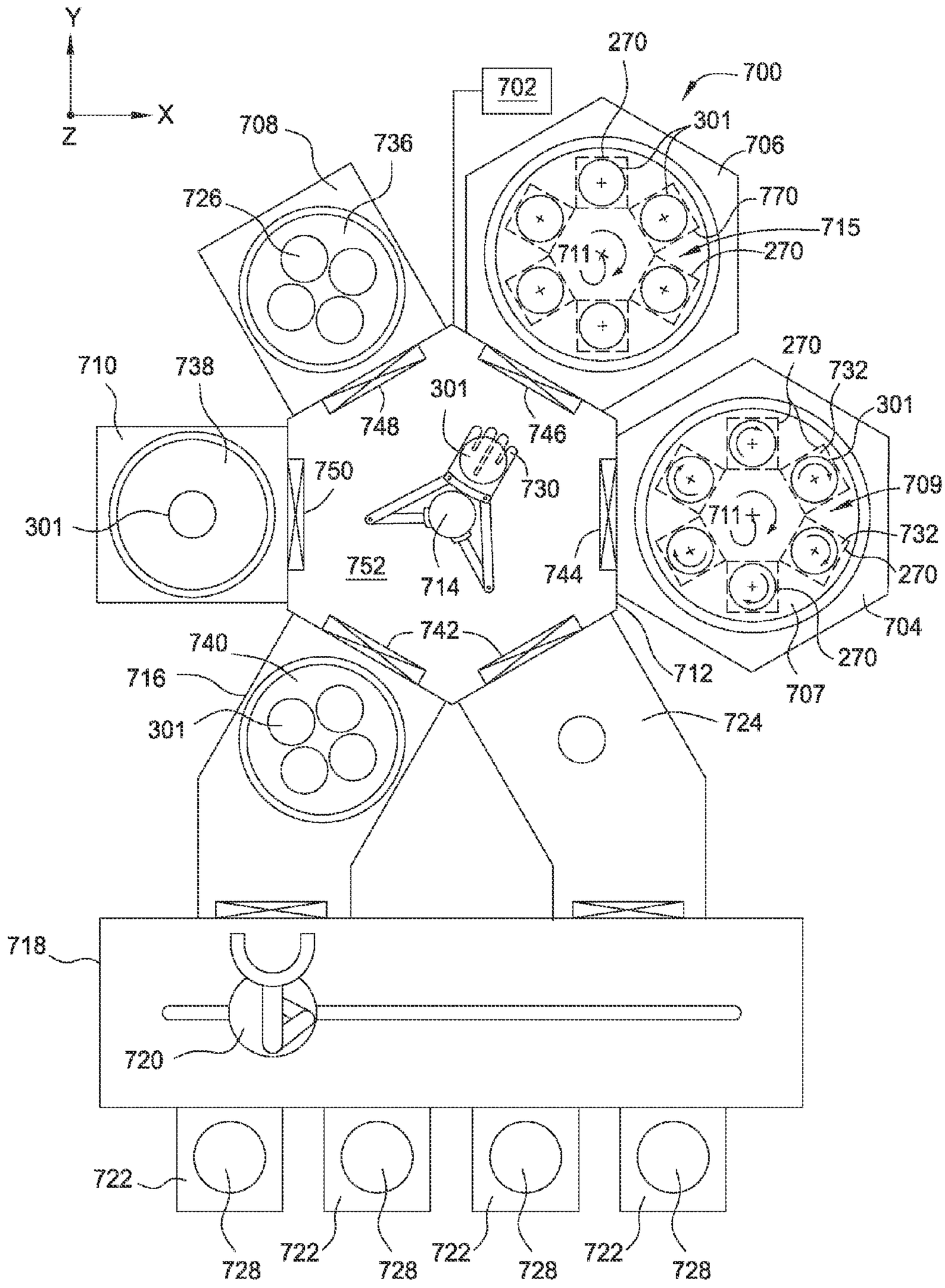
Y
X
Z
270
700
702
708
736
301
706
726
770
715
711
270
710
738
748
746
301
732
301
750
730
709
711
732
752
714
744
270
704
742
740
712
716
270
707
301
724
718
720
722
728
722
728
722
728
722
728

FIG. 7

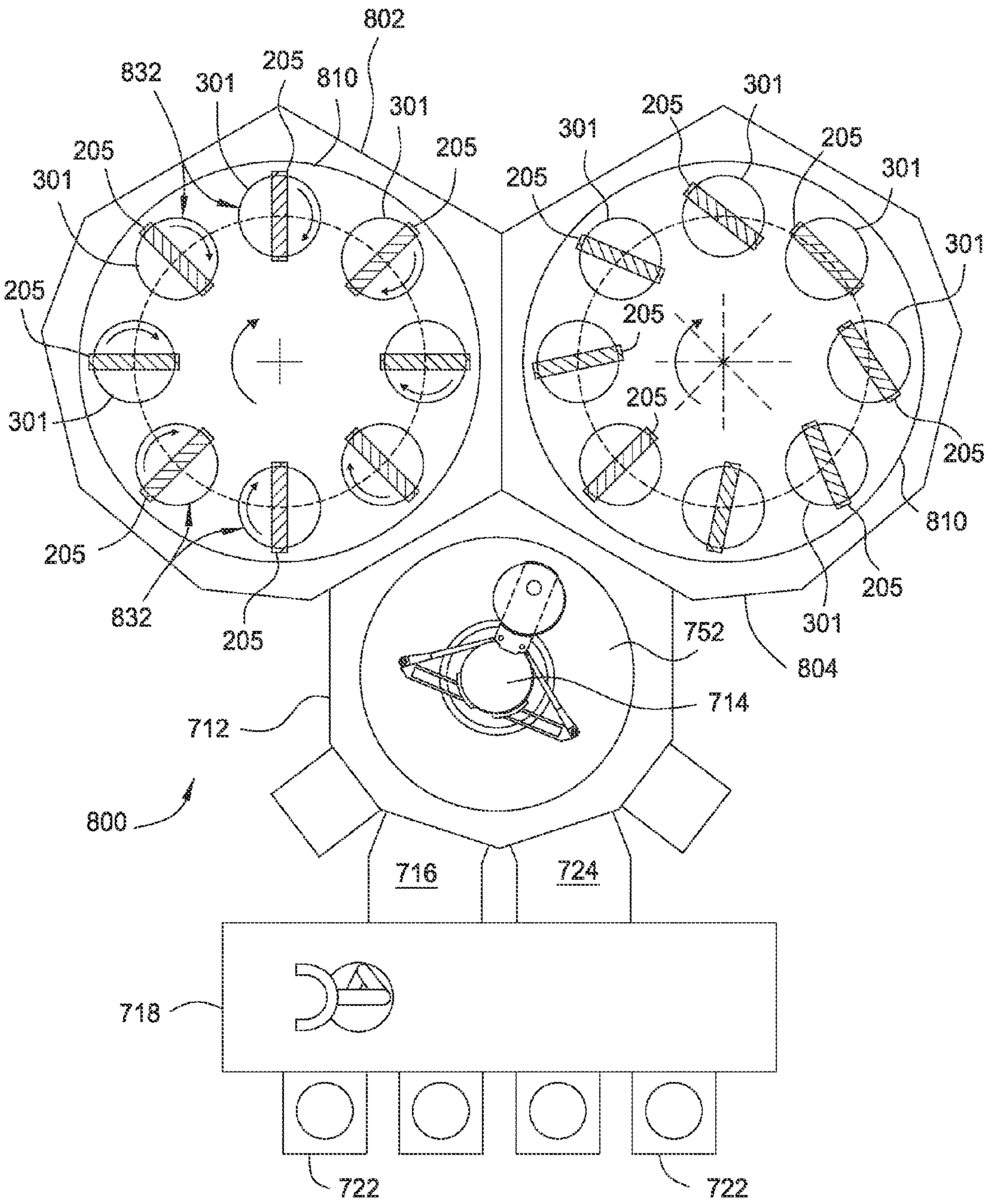
802
832
301
205
810
301
205
205
301
205
301
205
205
301
205
301
205
205
205

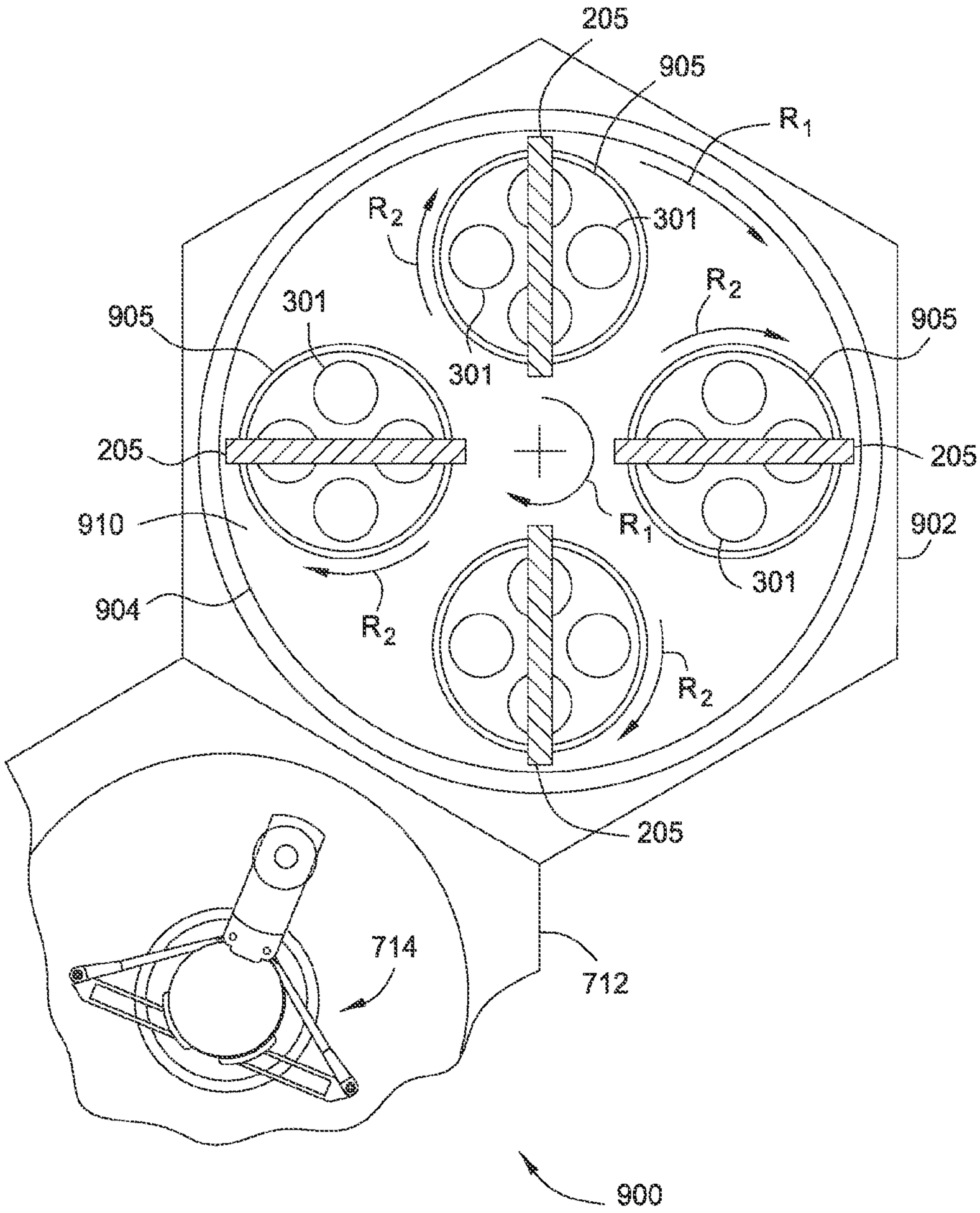
205
905
R_1
R_2
301
905
301
R_2
905
301
205
205
910
R_1
902
904
301
R_2
R_2
205
714
712
900

FIG. 9

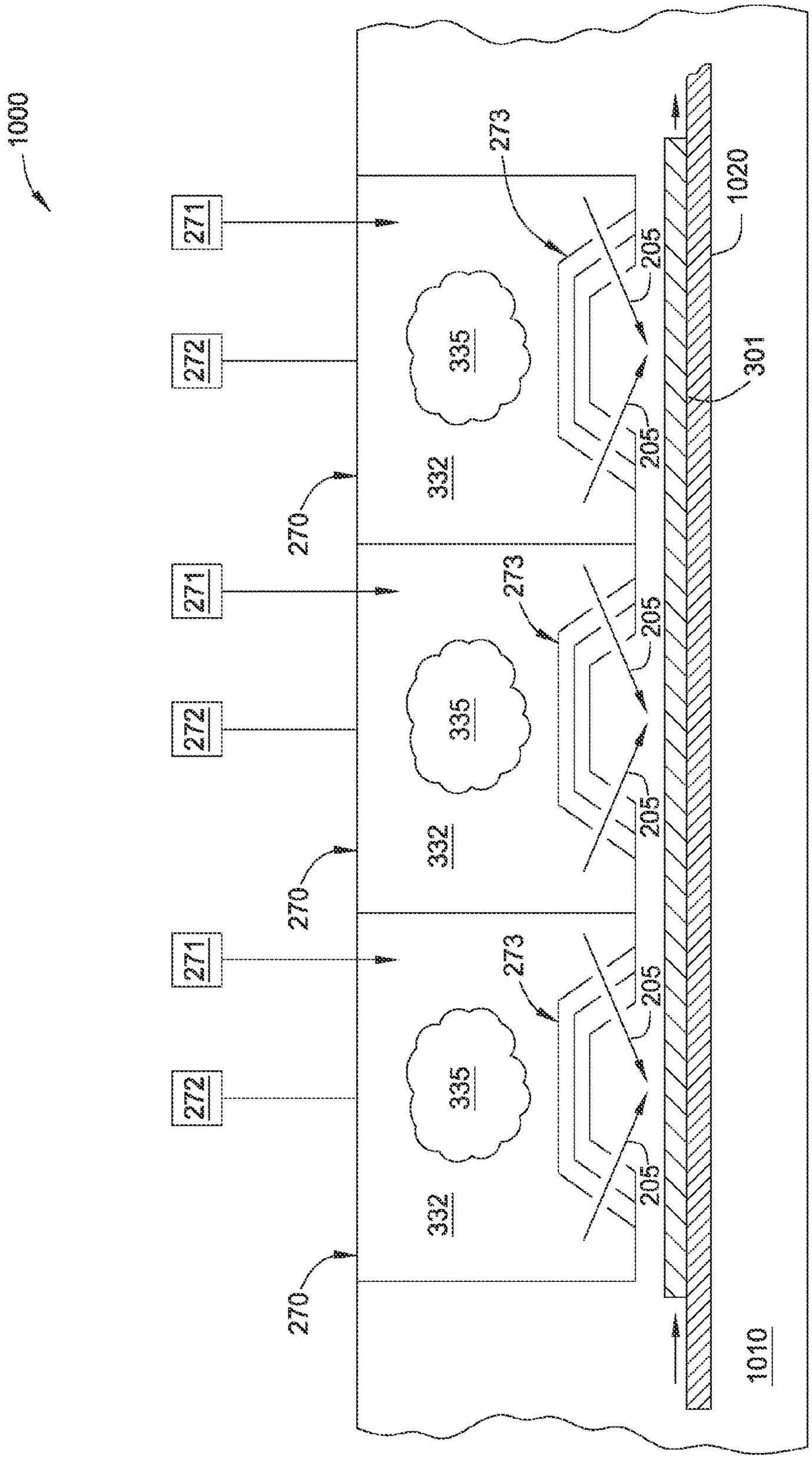
1000
271
273
205
1020
272
335
301
332
270
271
273
205
272
335
332
270
271
273
205
272
335
205
332
270
1010

FIG. 10

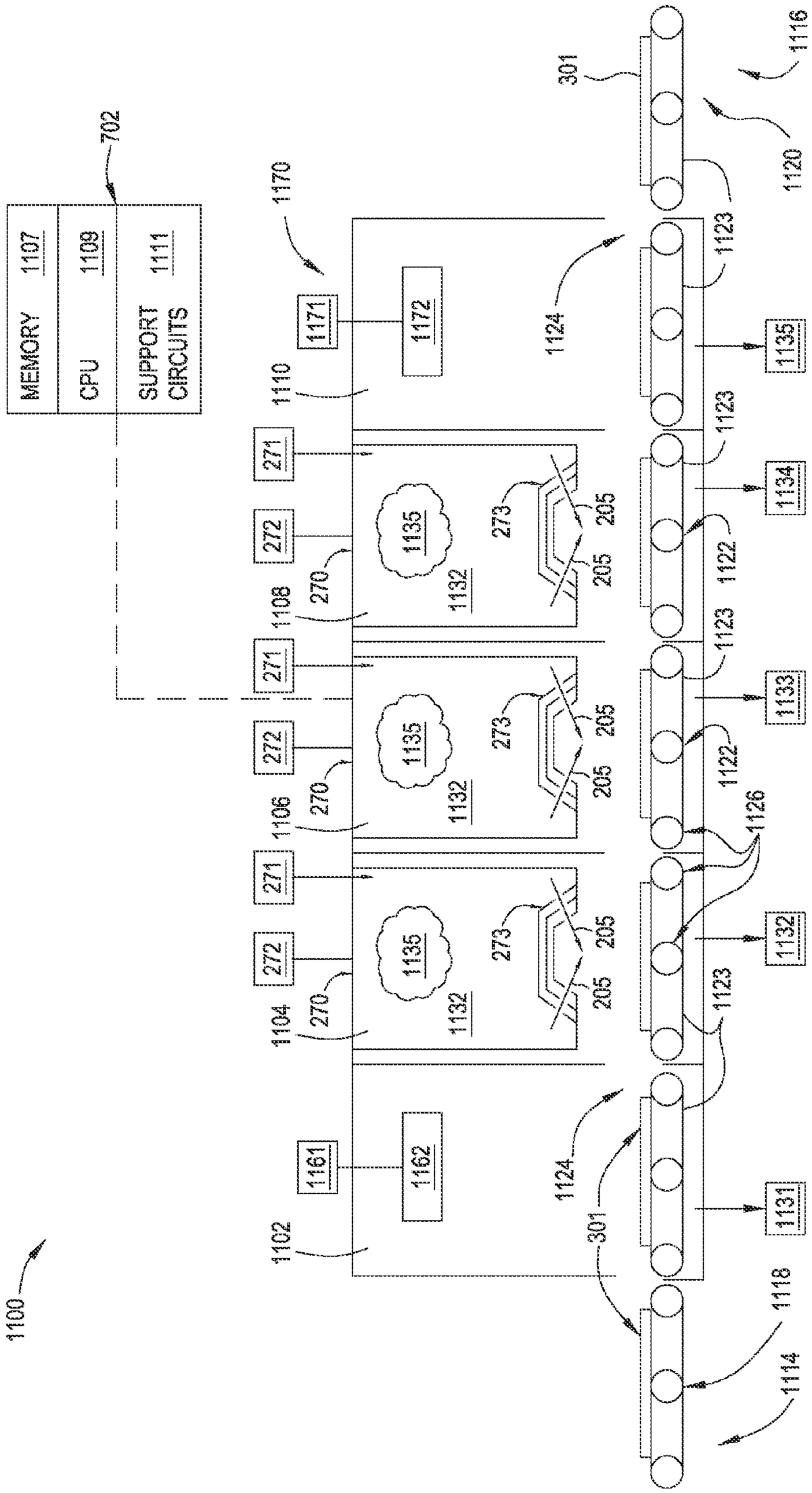
1100
702
MEMORY 1107
CPU 1109
SUPPORT CIRCUITS 1111
1102
1104
1106
1108
1110
1116
1120
1122
1123
1124
1126
1131
1132
1133
1134
1135
1161
1162
1170
1171
1172
1114
1118
270
271
272
273
205
301

FIG. 11

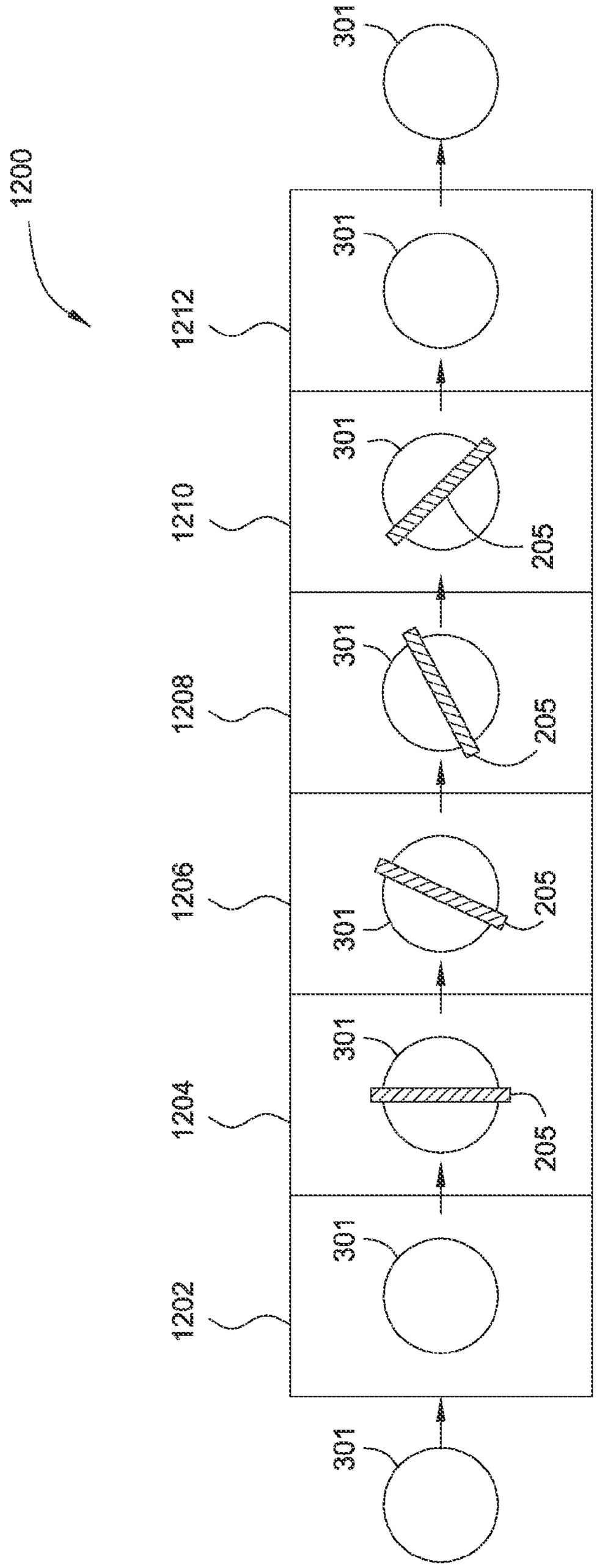

FIG. 12

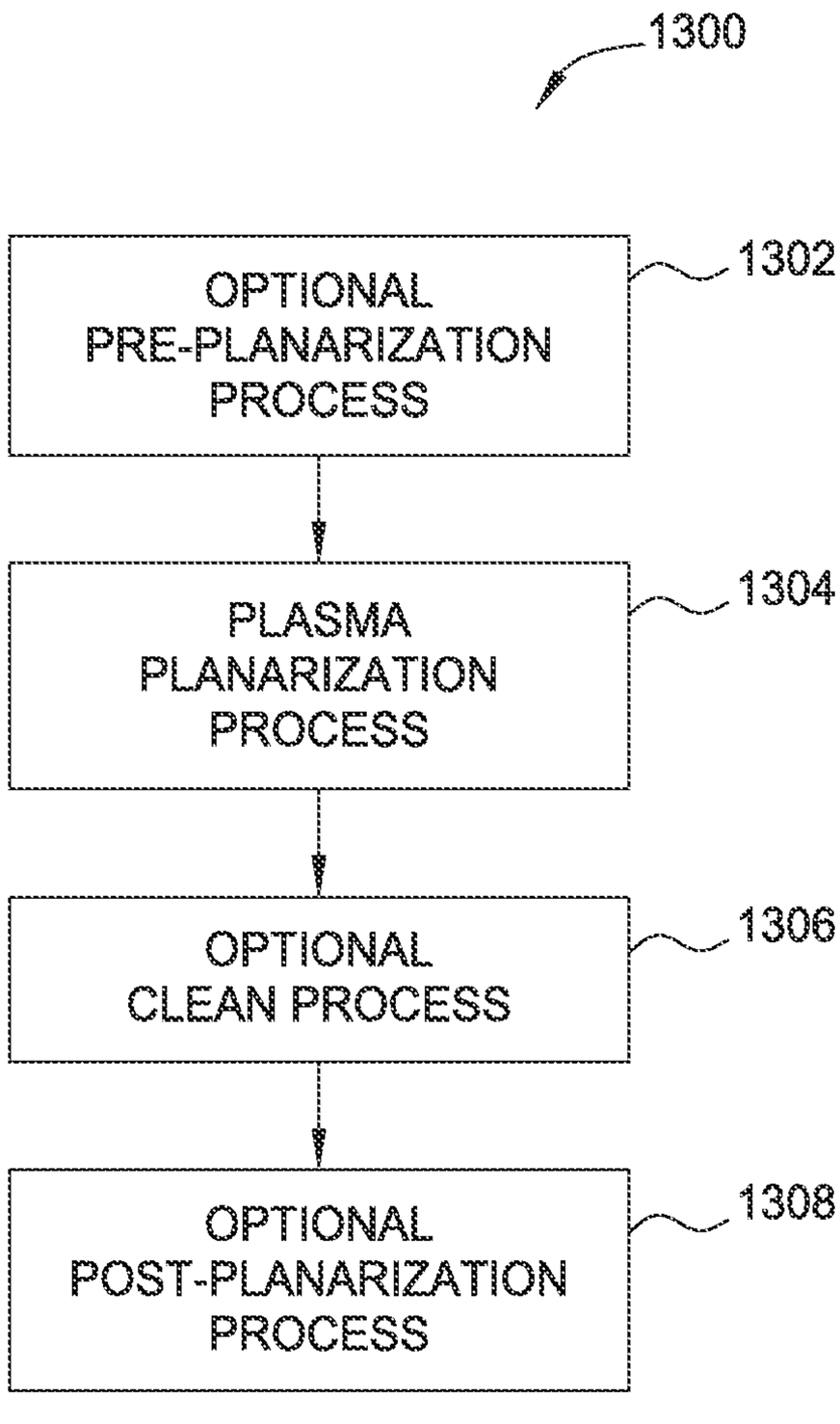
1300
OPTIONAL PRE-PLANARIZATION PROCESS
1302
PLASMA PLANARIZATION PROCESS
1304
OPTIONAL CLEAN PROCESS
1306
OPTIONAL POST-PLANARIZATION PROCESS
1308

FIG. 13

GRAZING ANGLE PLASMA PROCESSING FOR MODIFYING A SUBSTRATE SURFACE

CROSS-REFERENCE TO RELATED APPLICATIONS

[0001] This application claims benefit of both U.S. provisional patent application Ser. No. 61/949,841, filed Mar. 7, 2014, and U.S. provisional patent application Ser. No. 61/989,370, filed May 6, 2014. Both cases in their entirety are hereby incorporated herein by reference.

BACKGROUND OF THE INVENTION

[0002] 1. Field of the Invention

[0003] Embodiments of the disclosure provided herein generally relate to apparatus and methods for planarizing a non-uniform surface topography found on a surface of a substrate.

[0004] 2. Description of the Related Art

[0005] Integrated circuits are typically formed on substrates, particularly silicon wafers, by the sequential deposition of conductive, semiconducting or insulating layers. After each layer is deposited, it is etched to create circuitry features. As a series of layers are sequentially deposited and etched, the outer or uppermost surface of the substrate, i.e., the exposed surface of the substrate, becomes increasingly non-planar. FIG. **1**A is a cross-sectional view of a device structure **100** formed on a substrate **112** that has a non-planar surface **120**. The device structure **100** may include a patterned layer **114**, which is formed on a surface of the substrate **112**, and a deposited layer **116** that is formed over the patterned layer **114** and the substrate **112**. Due to the absence of material in various regions of the patterned layer **114**, the upper surface of the deposited layer **116** will contain features **121** that form part of the non-planar surface **120**. This non-planar surface presents problems in the photolithographic steps of the integrated circuit fabrication process. Therefore, there is a need to periodically planarize the substrate surface to provide a planar surface.

[0006] Chemical mechanical polishing is one accepted method of planarization. This planarization method typically requires that the substrate be mounted on a carrier or polishing head with the exposed surface of the substrate being placed against a rotating polishing pad or moving polishing belt that has a polishing slurry disposed thereon. The carrier head provides a controllable motion relative to the polishing pad and applies a load (i.e., pressure) to the substrate to cause the removal of a portion of an exposed layer on the substrate by mechanical action created between the substrate and the polishing pad. The polishing slurry, which will generally include at least one chemically-reactive agent (e.g., acids, bases or even deionized water for oxide polishing) and abrasive particles (e.g., silicon dioxide for oxide polishing), is supplied to the surface of the polishing pad and substrate during the CMP process to help remove a portion of the substrate by mechanical and chemical action.

[0007] In applying conventional planarization techniques, such as CMP, it is extremely difficult to achieve a high degree of surface uniformity, particularly across a surface extending from a dense array of features, for example copper lines, bordered by an open field. In planarizing the substrate surface using a CMP process, undesirable erosion and dishing typically occur, decreasing the degree of surface uniformity or planarity, and challenging the depth of focus limitations of conventional photolithographic techniques, particular with respect to achieving submicron dimensions, such as about 0.25 micron and below. Dishing is defined as a difference in height between the height of the sidewalls of a feature formed in a dielectric layer (e.g., oxide layer) and the material disposed within the feature (e.g., copper (Cu) (interconnect applications), silicon dioxide (STI applications)) within the dense array. Erosion is defined as the height differential between the oxide in the open field and the height of the oxide within the dense array. Dishing and erosion formation are the most important parameters in evaluating the effectiveness of a planarization process. FIG. **1**B is a cross-sectional view of the device structure **100**, shown in FIG. **1**A, after a CMP planarization process has been performed, wherein the polished device structure contains a planarized surface **119** and a feature **117** that has a dishing type defect. It remains desirable to have a process of planarization where dishing and erosion are decreased or removed entirely.

[0008] The demand for planarization processes that can be performed on ultrathin layers, mechanically fragile layers (e.g., low-k materials and structures) and on layers that contain toxic elements (e.g., arsenic (As)) has increased over the years, due to the shrinkage in device size and the need for exotic materials to perform certain tailored functions in an electronic device. Due to the mechanical nature of the CMP process, the planarization of thin and fragile layers has become a significant challenge, especially for semiconductor devices that contain low-k porous or air-gap containing structures. Further, in CMP applications that generate toxic byproducts or toxic waste, due the presence of toxic materials in the polished layer, such as indium gallium arsenide (InGaAs) materials, gallium arsenide (GaAs) materials, the handling of the substrates and contaminated system components becomes much more of a safety and/or cost of consumable parts issue.

[0009] Therefore, there is a need for a method and apparatus for planarizing a surface of a substrate that solves the problems described above. There is also a need for a planarization processes that can planarize the surface of the substrate without damaging the underlying layers, and also not expose maintenance personnel to toxic byproducts or toxic waste.

SUMMARY OF THE INVENTION

[0010] The present disclosure generally includes apparatus and methods for planarizing a surface of a substrate using a plasma modification process. A process of plasma planarizing a surface of a substrate generally includes the removal and/or redistribution of a portion of an exposed surface of the substrate by use of an energetic particle beam while the substrate is disposed within a particle beam modification apparatus. In some embodiments, the planarization of a portion of an exposed surface of a substrate may be performed by use of a particle beam modification process that is performed in a sub-atmospheric pressure processing environment. The particle beam modification process may include the delivery of a charged particle beam that includes a spatially localized group of energetic particles (e.g., charged particles and/or neutrals) that are directed towards a surface of a substrate for a desired period of time. In some cases, the particle beam modification process may include the delivery of a charged particle beam that includes a spatially localized group of electrically charged particles that are directed towards a surface of a substrate.

[0011] Embodiments of the disclosure may provide an apparatus for planarization of a surface on a substrate, comprising a substrate support having a substrate supporting surface, a plasma generation source, and a beam extraction assembly. The plasma generation source assembly is configured to ionize a process gas. The beam extraction assembly may comprise a first electrode having a first aperture that is positioned to extract at least a portion of the charged particles formed in the plasma generation region, a second electrode having a second aperture that is positioned to receive a flow of the charged particles that passed through the first aperture. The extraction of the charged particles is done by electric fields generated by the electrodes positioned in the beam extraction assembly. The properties of the extracted charged particles depend on the geometry of the plasma boundary and relative biases applied to the components found in the beam extraction assembly. A first power source is generally configured to electrically bias the second electrode to increase the kinetic energy of the charged particles that have passed through the first aperture. The first and second apertures are positioned to direct the flow of the charged particles to the surface of the substrate during processing.

[0012] Embodiments of the disclosure may further provide an apparatus for modifying a surface of a substrate, comprising a substrate support having a substrate supporting surface, wherein a first direction is perpendicular to the substrate supporting surface, a first beam extraction assembly configured to simultaneously generate a first particle beam that exits the first beam extraction assembly in a second direction, wherein the first particle beam is directed towards the substrate supporting surface and the second direction is at a first grazing angle relative to the first direction and a second particle beam that exits the first beam extraction assembly in a third direction, wherein the second particle beam is directed towards the substrate supporting surface and the third direction is at the first grazing angle or a second grazing angle relative to the first direction, and an actuator that is configured to translate the substrate supporting surface relative to the first and the second particle beams.

[0013] Embodiments of the disclosure may further provide a method of planarizing a surface of a substrate in a processing region of a processing chamber, comprising delivering a first particle beam from a beam extraction assembly towards a substrate disposed on a substrate supporting surface of a substrate support, wherein the delivered first particle beam is provided in a first direction that is at a first grazing angle relative to a second direction which is perpendicular to the substrate supporting surface, delivering a second particle beam from the beam extraction assembly towards the substrate supporting surface, wherein the delivered second particle beam is provided in a third direction that is at the first grazing angle or a second grazing angle relative to the second direction, and moving the substrate relative to the first and second particle beams, or moving the first and second particle beams relative to the substrate, to reduce the non-planarity of a non-planar surface formed on the substrate.

[0014] Embodiments of the disclosure may further provide a system for planarizing a surface of a substrate, comprising a transfer chamber having a transfer region, a first process chamber that is coupled to the transfer chamber, a second process chamber that is coupled to the transfer chamber, wherein the second process chamber configured to deposit a layer on the substrate, and a substrate transfer robot disposed in the transfer region, and configured to load and unload substrates disposed in the first processing chamber and the second processing chamber. The first process chamber may comprise a substrate support having a substrate supporting surface, wherein a first direction is perpendicular to the supporting surface, a first beam extraction assembly configured to simultaneously generate a first particle beam that exits the first beam extraction assembly in a second direction, wherein the first particle beam is directed towards the substrate supporting surface and the second direction is at a first grazing angle relative to the first direction, and a second particle beam that exits the first beam extraction assembly in a third direction, wherein the second particle beam is directed towards the substrate supporting surface and the third direction is at the first grazing angle or a second grazing angle relative to the first direction, and an actuator that is configured to translate the substrate supporting surface of the substrate support relative to the first and the second particle beams.

[0015] Embodiments of the disclosure may further provide a method of modifying a surface of a substrate in a processing region of a processing chamber, comprising delivering a first particle beam from a beam extraction assembly towards a substrate disposed on a substrate supporting surface of a substrate support, wherein the delivered first particle beam is provided in a first direction that is at a first grazing angle relative to a second direction which is perpendicular to the substrate supporting surface, moving the substrate relative to the first particle beam, or moving the first particle beam relative to the substrate, to reduce the non-planarity of a non-planar surface formed on the substrate, and delivering a etching gas to the non-planar surface of the substrate while substrate is moved relative to the delivered first particle beam.

BRIEF DESCRIPTION OF THE DRAWINGS

[0016] So that the manner in which the above recited features of the present invention can be understood in detail, a more particular description of the invention, briefly summarized above, may be had by reference to embodiments, some of which are illustrated in the appended drawings. It is to be noted, however, that the appended drawings illustrate only typical embodiments of this invention and are therefore not to be considered limiting of its scope, for the invention may admit to other equally effective embodiments.

[0017] FIG. **1**A is a cross-sectional view of a device structure formed on a surface of a substrate prior to performing a planarization process.

[0018] FIG. **1**B is a cross-sectional view of the device structure after performing a conventional planarization process, wherein a feature within the device structure contains a feature that has a dishing type defect.

[0019] FIG. **2** is a schematic cross-sectional view of a device structure that is being processed using a particle beam modification process, according to an embodiment described herein.

[0020] FIG. **3** is a schematic side cross-sectional view of a particle beam modification apparatus, according to an embodiment described herein.

[0021] FIG. **4** is a schematic plan view of substrate that is receiving at least a portion of a particle beam generated from a particle beam modification apparatus, according to an embodiment described herein.

[0022] FIG. **5**A is a schematic side view of a portion of a particle beam generating assembly, according to an embodiment described herein.

[0023] FIG. **5**B is a schematic side view of a portion of a particle beam generating assembly, according to an embodiment described herein.

[0024] FIG. **6**A is a schematic side view of a portion of a particle beam generating assembly, according to an embodiment described herein.

[0025] FIG. **6**B is a schematic side view of a portion of a particle beam generating assembly, according to an embodiment described herein.

[0026] FIG. **6**C is a schematic plan view of a shape of a formed particle beam, according to an embodiment described herein.

[0027] FIG. **6**D is a schematic plan view of a shape of a formed particle beam, according to an embodiment described herein.

[0028] FIG. **7** is a plan view of a cluster tool including multiple-substrate processing chambers in accordance with one embodiment of the present invention.

[0029] FIG. **8** is a plan view of a cluster tool including multiple-substrate processing chambers, according to an embodiment described herein.

[0030] FIG. **9** is a plan view of a portion of a substrate processing chamber disposed on a cluster tool, according to an embodiment described herein.

[0031] FIG. **10** is a side view of a processing chamber that is configured to process a substrate, according to an embodiment described herein.

[0032] FIG. **11** is a side view of a linear type cluster tool including multiple-substrate processing chambers, according to an embodiment described herein.

[0033] FIG. **12** is a plan view of a linear type cluster tool including multiple-substrate processing chambers, according to an embodiment described herein.

[0034] FIG. **13** illustrates one or more method steps that can be used to perform a plasma modification process, according to an embodiment described herein.

[0035] To facilitate understanding, identical reference numerals have been used, where possible, to designate identical elements that are common to the figures. It is contemplated that elements disclosed in one embodiment may be beneficially utilized on other embodiments without specific recitation.

DETAILED DESCRIPTION

[0036] Embodiments of the disclosure provided herein include apparatus and methods for modifying a surface of a substrate using a plasma modification process. The plasma modification process may include a plasma planarization process that generally includes the removal and/or redistribution of a portion of an exposed surface of the substrate by use of one or more energetic particle beams while the substrate is disposed within a particle beam generation apparatus. Embodiments of the disclosure may also provide a plasma modification process that includes one or more pre-planarization processing steps and/or one or more post-planarization processing steps that are all performed within one processing system. Some embodiments of the present disclosure may provide apparatus and methods for planarizing a surface of a substrate by performing all of the plasma modification processes within either the same processing chamber, the same processing system or within processing chambers found in two or more processing systems.

[0037] In some embodiments, the planarization of a portion of an exposed surface of a substrate may be performed by use of a particle beam modification process that is performed in a sub-atmospheric pressure processing environment. In general, a plasma modification process includes performing one or more steps that make an outer surface of a substrate relatively flat and/or smooth. In some embodiments, the modification process is used to remove an amount of deposited material overburden found on the surface of the substrate, while also planarizing the surface of the substrate. The particle beam modification process may include the delivery of one or more energetic particle beams that includes a spatially localized group of energetic particles that are directed towards and moved relative to a surface of a substrate for a desired period of time. The particles found in the formed one or more energetic particle beams may have approximately the same kinetic energy and are directed towards the surface of the substrate from a particle beam to help remove material and/or planarize the exposed surface of the substrate. In some cases, the particle beam modification process may include the delivery of a charged particle beam that includes a spatially localized group of electrically charged particles that are directed towards a surface of a substrate. The processed substrate may include one or more exposed regions that contain a conductive material, a semiconductive material and/or a dielectric material.

[0038] FIG. **2** illustrates a schematic cross-sectional view of a device structure **200** having a non-planar surface **201**A that is being exposed to one or more energetic particle beams to planarize the non-planar surface **201**A of the device structure **200**. The device structure **200** may include a patterned layer **253**, which is formed on a surface of the base substrate **251**, and a deposited layer **252** that is formed over the patterned layer **253** and the base substrate **251**. Due to the absence of material in various regions of the patterned layer **253**, the upper surface of the deposited layer **252** will contain features **201**, which form part of the non-planar surface **201**A, which are to be removed by performing the particle beam modification process described herein.

[0039] The particle beam modification process generally includes the delivery of at least one energetic particle beam, hereafter particle beam **205**, to the non-planar surface **201**A of a device structure **200** from a beam extraction assembly **270** to remove material and/or planarize the exposed surface of the substrate. In general, as is discussed further below, the delivered particle beam(s) **205** are used to modify the surface of the substrate and may include charged particles and/or uncharged particles (e.g., neutrals and/or radicals). The particle beam modification process is generally performed in a moderate to low pressure environment within the processing region **220**, such as at a processing pressure of between about 0.01 mTorr and about 1 Torr.

[0040] The particle beam modification process may include the delivery of one or more particle beams **205** to remove and/or redistribute portions of the non-planar surface **201**A by use of a purely physical material planarization process, or in some cases by use of both a physical and a chemical material planarization process. The physical component of particle beam modification process generally includes the energetic bombardment of a portion of the surface of the substrate, whereby the energetic particles in the particle beam **205**, which are generated by the beam extraction assembly **270**, cause material on the surface of the substrate to be dislodged and/or ejected therefrom, as shown by arrows "B" in FIG. **2**. The dislodged and/or ejected material, such as material **202**, generated by the interaction of the surface of the

substrate with the particle beam **205** will cause the material **202** to be redistributed on and/or removed from the surface of the substrate.

[0041] Typically, the higher the mass of the atoms and/or molecules that form the energetic particles in the particle beam **205**, the greater the ability of the particle beam **205** to physically remove material from the surface of the substrate. The term "sputtering" is often used to describe the physical component of the particle beam modification process, and the term "sputter yield" is generally used herein to describe the ability of an energetic gas atom, or molecule, in the particle beam to remove atoms from the surface of the substrate. The higher the sputter yield, which is typically dependent on the mass and the kinetic energy of the particles (e.g., atom or molecule) in the beam, the more effective the energetic atoms are at removing material from the surface of the substrate. In some configurations, the particle beam comprises energetic ions and/or neutrals formed from a plasma that contains one or more gas atoms, such as argon (Ar), neon (Ne), krypton (Kr), xenon (Xe), radon (Rn), nitrogen (N), helium (He) and hydrogen (H), and/or molecules, such as nitrogen and hydrogen compounds (N_xH_y), or a combination of thereof (e.g., Ar/Xe). In some embodiments, the particle beam comprises energetic ions and/or neutrals formed from a plasma that contains molecules formed from gases containing elements such as germanium (Ge), silicon (Si), gallium (Ga), arsenic (As), Iodine (I), or a combination of gas atoms and molecules thereof (e.g., Ar/trimethylgallium (TMG)). In one example, the particle beam **205** comprises an argon ion beam.

[0042] Another, factor that can affect the ability of the particle beam **205** to remove and/or redistribute material on the surface of the substrate is the incident angle **210** of the directed particle beam, which is typically measured from a direction that is perpendicular, or normal, to the surface of the device structure **200**. In FIG. **2**, the particle beam $\mathbf{205}_1$ is oriented normal to the surface of the substrate and particle beam $\mathbf{205}_2$ is shown at an angle **210** to the surface of the device structure **200**, which is also referred to herein as the grazing angle. In general, a particle beam **205** may be delivered in a direction that has an angle **210** from the normal that may vary from about zero degrees (e.g., normal) and less than about 90 degrees (e.g., ~89.5 degrees). It is believed that particle beams **205** that have angles of 60 or greater, such as 70-80 degrees typically have good smoothing performance, which is the ability of the particle beam **205** to smooth the surface roughness found on the surface of the substrate. It is also believed that particle beams that have an angle **210** of 60-70 degrees or less will typically have a good sputter yield performance. However, in one example, in an effort to achieve good smoothing performance on a crystalline silicon (Si) substrate al keV energy beam is delivered at an incidence angle ranging from 30-60 degrees.

[0043] In general, the chemical material planarization component of the particle beam modification process will include a gas phase or vapor phase chemical interaction of the ions or radicals found in the particle beam **205**, or gas phase, vapor phase and/or gas or vapor phase reactive species (e.g., radicals) supplied from the processing environment surrounding the particle beam **205**, with the material at the surface of the substrate. Thus, the chemical interaction of chemical species found in the particle beam **205**, or that interact with particle beam **205**, is used to help remove and/or redistribute the material on the surface of the substrate by use of a non-physical method. In some cases, the chemical material planarization process may occur by reacting a gas or vapor phase etchant with the surface of the substrate. Therefore, in some embodiments, the particle beam **205** and/or environment surrounding the particle beam **205** comprise an etchant material, such as an etchant gas that contains a halogen gas, such as chlorine (Cl_2), fluorine (F_2), bromine (Br_2) and iodine (I_2), and/or molecules, such as ammonia (NH_3). In one example, the particle beam **205** comprises chlorine (CI) or fluorine (F) containing ions. In one example, the particle beam **205** comprises an inert gas and an etchant gas, such as a gas mixture that contains argon and fluorine or chlorine. In another example, the particle beam **205** comprises an inert gas and an etchant gas, where the etchant gas may contain fluorine (F_2), nitrogen trifluoride (NF), carbon tetrafluoride (CF_4), boron trifluoride (BF_3), xenon difluoride (XeF_2), boron trichloride (BCl_2), trifluoromethane (CHF_3), hexafluoroethane (C_2F_6), chlorine (Cl_2) or other fluorocarbons or chlorine containing gases. In another example, the particle beam **205** comprises an inert gas and the processing region surrounding the substrate includes an etchant gas, such as fluorine or chlorine.

[0044] The beam extraction assembly **270** typically includes a gas source **271**, a plasma generation source **272** and an electrode assembly **273**. The gas source **271** generally includes one or more sources of gas atoms, gas phase molecules or other vapor delivering sources that are able to provide a process gas that includes gas atoms, molecules, or vapor that when ionized by the plasma generation source **272** can be extracted by the electrode assembly **273** to form part of the particle beam **205**.

[0045] The plasma generation source **272** generally includes a source of electromagnetic energy that is configured to deliver energy to a plasma generation region to form a plasma therein using the process gas delivered from the gas source **271**. In general, the plasma generation source **272** can use one or more plasma generation techniques to form a plasma in the plasma generation region. The plasma generation techniques may include, for example, the delivery of electromagnetic energy to the plasma generation region from a capacitively coupled plasma source, an inductive coupled plasma source, a helicon type source, electron cyclotron resonance (ECR) type source and/or the delivery of microwave energy from a microwave source.

[0046] The electrode assembly **273** is generally a device that is used to extract ions generated within the plasma generation region of the plasma generation source **272** to form and deliver one or more energetic particle beams that each include a spatially localized group of energetic particles that are directed towards a surface of a substrate. The one or more energetic particle beams **205** may include a cylindrical shaped beam, a plurality of adjacent or overlapping cylindrical beams, or a ribbon shaped beam (e.g., a continuous rectangular shaped beam). The one or more energetic particle beams **205** can be moved relative to the non-planar surface **201**A during processing and/or the substrate can be moved relative to the energetic particle beam **205** during processing to planarize the surface of the substrate. In some embodiments, as will be discussed further below, the electrode assembly **273** includes components that are adapted to adjust the trajectory (e.g., angle **210**) of the generated energetic particle beams to the surface of the substrate to compensate for surface morphology variations on the non-planar surface **201**A and/or improve the results of the particle beam modification process.

[0047] FIG. **3** is a schematic cross-sectional view of a processing chamber **300** that includes a beam extraction assembly **270** that is positioned to planarize a portion of a substrate **301** that is positioned to receive one or more of the energetic particle beams **205** that are generated and directed to the surface of the substrate by the beam extraction assembly **270**. The processing chamber **300** generally includes a chamber assembly **315** and the beam extraction assembly **270**. The chamber assembly **315** generally includes one or more walls **316** that enclose the processing region **310** in which the substrate **301** is disposed during the particle beam modification process. The chamber assembly **315** will also typically include a system controller **390**, a pumping system **311** and a gas delivery source **317**, which are used in combination to control the processing environment within the processing region **310**. The pumping system **311** may include one or more mechanical pumps (e.g., rough pump, turbo pump) that are configured to control a desired pressure within the processing region **310**. The gas delivery source **317** may include one or more sources that are configured to deliver an amount or a flow of an inert and/or a reactive gas (e.g., etchant gases) to the processing region **310**. In some configurations, the chamber assembly **315** may also include a thermal source (not shown) (e.g., lamps, radiant heaters) that is controlled by the system controller **390** to adjust the temperature of the substrate **301** during processing. In one example, the system controller **390** is configured to control the gas composition, chamber pressure, substrate temperature, gas flow or other useful process parameter in the processing region **310** during the particle beam modification process.

[0048] The chamber assembly **315** will also typically include a substrate support assembly **371** that is adapted to support the substrate during processing. In some cases, the substrate support assembly **371** may also include one or more actuators (not shown) that are adapted to translate or rotate the substrate relative to the electrode assembly **273** during processing. In applications that require the substrate **301** to be translated or rotated, some of the driving components, such as an actuator or a motor are positioned outside of the processing region **310** and are coupled to the elements that support the substrate **301** within the processing region **310** using a conventional vacuum feed-through or other similar mechanical device. In some configurations, one or more of the actuators are adapted to position the substrate **301** relative to the electrode assembly **273** so that a desired gap **372**, which is measured in the Z-direction in FIG. **3**, is formed between the substrate **301** and the electrode assembly **273**.

[0049] As noted above, the beam extraction assembly **270** typically includes a gas source **271**, a plasma generation source **272** and electrode assembly **273**. In one configuration, as illustrated in FIG. **3**, the gas source **271** generally includes one or more separate gas sources **341** that are each configured to deliver a process gas (e.g., gas atoms, gas phase molecules or other vapor containing materials) to the plasma generation region **332** of the beam extraction assembly **270**. The gas source **341** is configured to deliver a process gas that may include an inert gas and/or an etchant gas that are used to form at least part of the particle beam **205**, as discussed above and further below.

[0050] Referring to FIG. **3**, the pumping system **311** may also be separately connected to the processing region **310** and the plasma generation region **332** so that different pressures can be maintained in each region. In one example, the pumping system **311**, gas delivery source **317** and/or gas sources **341** are configured to work together to maintain the plasma generation region **332** at a pressure greater than the processing region **310** during processing. In one configuration, the plasma generation region **332** includes a pump (not shown) that is separate from the pumping system **311**, and is configured to maintain the pressure in the plasma generation region **332** at a desired level.

[0051] As noted above, the plasma generation source **272** generally includes a source of electromagnetic energy that is configured to form a plasma **335** in the plasma generation region **332** using the process gas delivered from the one or more gas sources **341**. The plasma generation source **272** may include a power source **330** and an antenna **331**, which is in electrical communication with the plasma generation region **332**. In one non-limiting example, the antenna **331** may be a capacitively coupled electrode that is adapted to generate the plasma **335** in the plasma generation region **332**, when radio frequency (RF) energy is delivered from the power source **330** to the antenna **331** during processing.

[0052] The electrode assembly **273** may include a beam controller **350** and beam delivery element **322** that are used to extract charged particles formed within the plasma generation region **332** to form and deliver one or more particle beams **205** to a surface of a substrate **301** through one or more apertures **321** that are formed in the beam delivery element **322**. The shape of the aperture **321** is formed so that a beam having a desired shape is created by the beam delivery element **322**, such as a ribbon shaped or cylindrical shaped beam. In some configurations, the aperture **321** is also positioned and aligned to direct the particle beam **205** to a desired portion or region of the surface of the substrate during processing. The system controller **390** is generally configured to control the generation and delivery of the one or more energetic particle beams **205** by sending commands to the various components found in the beam controller **350** and beam delivery element **322**.

[0053] The chamber assembly **315** may also include a bias assembly **360** that is in communication with the system controller **390** and is configured to deliver energy to the processing region **310** of the processing chamber **300**. The bias assembly **360** generally includes a support electrode **364** and a source **363**, which is coupled to ground and can be used to remove any accumulated charge found on the substrate **301** during or after performing the plasma modification process. To remove any residual charge found on the substrate, the source **363** may utilize an AC or high frequency power source (e.g., 2 MHz-200 MHz power source) that is configured to form a plasma over the substrate **301** during one or more phases of the plasma modification process performed in the processing region **310**. It is believed that the formed plasma will provide a path to ground that will allow any stored charge in the substrate to be dissipated. In some cases the bias assembly **360** can also be used to help control the trajectory and/or energy of the particle beam **205** that strikes the surface of the substrate **301** during the plasma modification process.

[0054] FIG. **4** is a plan view of the substrate **301** that is disposed within the processing region **310** of the processing chamber **300**. As illustrated in FIG. **4**, the substrate **301**, may include a plurality of die **301**A that contain a plurality of features **301**B formed therein. The features **301**B will generally include protrusions and depressions in the non-planar surface **301**C of the substrate **301**, which are to be planarized

during the particle beam modification process. The features **301**B may be similar to the features **201** discussed above in conjunction with FIG. **2**.

[0055] In one configuration, as illustrated in FIG. **4**, a single ribbon shaped particle beam **205** is delivered across the surface of the substrate **301** to planarize the non-planar surface **301**C of the substrate **301**. In some embodiments, the substrate **301** is rotated "R" relative to the particle beam **205** about a substrate center **301**D to assure that the directional nature of plurality of features **301**B on the substrate **301** do not hinder the ability of the particle beam **205** to evenly planarize the non-planar surface **301**C. In this configuration the processing chamber **300** may include a rotating substrate support assembly **371** (FIG. **3**) that is configured to position, support and rotate the substrate **301** relative to the particle beam **205** when the substrate **301** is disposed within the processing region **310**. By varying the angular orientation of the surface of the substrate **301** relative to the particle beam **205**, any shadowing effects created by the differing orientation of the features **301**B relative to the incident particle beam **205** can be reduced or minimized, which will improve the ability of the beam extraction assembly **270** to uniformly planarize the non-planar surface **301**C of the substrate **301**.

[0056] FIG. **5**A is a schematic cross-sectional view of a portion of the beam delivery element **322** that is coupled to the beam controller **350** that is found within the beam extraction assembly **270**. In one configuration, as illustrated in FIG. **5**A, the beam controller **350** includes "multi-element extraction assembly," such as a "triode" assembly, that is configured to extract charged particles (e.g., ions) generated in the plasma generation region **332** and form and deliver a particle beam **205** in a desired direction to desired region of a surface of a substrate **301** through one or more apertures **321** formed in the beam delivery element **322**. Extraction of the charged particles is done by electric fields generated by the electrodes positioned in the beam extraction components of the beam delivery element **322**. Extraction conditions depend on the geometry of the plasma boundary and relative biases applied to the beam extraction components found in the beam delivery element **322**. In one configuration, the beam delivery element **322** will generally include a plasma aperture electrode **511**, a local ground electrode **512** and steering electrodes **513** that are all connected to various biasing components found in the beam controller **350**. The biasing components found in the beam controller **350**, such as power sources **521**, **531**, **532** and **541** may include power supplies that are each be able to drive the various connected electrodes at a positive or a negative direct current (DC), alternating current (AC) and/or radio frequency (RF) provided potential. The plasma aperture electrode **511** may include an inactive region **518** that generally does not participate in the formation of the particle beam **205**. The steering electrodes **513**, also sometimes referred to herein as a suppression electrode(s), may include a first steering electrode **514** and/or a second steering electrode **515** that are connected to various biasing components found in the beam controller **350**. Each of the electrodes **511-515** may include two or more conductive pieces of material that are electrically coupled to each other to share a same voltage potential. Alternatively, each set of electrodes **511-515** may be a one-piece structure that each have an aperture for forming or generating the particle beam **205**. Therefore, in this case, each set of electrodes can be thought of as a single electrode having a single voltage potential. The apertures **321** formed in the various electrodes found in the beam delivery element **322** may have a circular shape, an oval shape, a slot shape (e.g., slit has an aspect ratio that is different in at least two directions) or any other desirable shape.

[0057] In operation, the plasma aperture electrode **511**, the steering electrodes **513**, and the local ground electrode **512** can be independently biased, such that the properties of the particle beam **205**, such as particle beam energy (e.g., kinetic energy) and direction, can be controlled. Initially, an optional power source **521** is configured to provide a reference bias on the plasma aperture electrode **511**, so that ions found in the plasma **335** can be accelerated towards plasma aperture electrode **511** and/or the steering electrodes **513**. Since it may be possible to form positive and negative ions in the plasma **335** the biases applied to the various electrodes may be adjusted accordingly to generate and deliver a particle beam **205** having a desired composition and energy to the surface of the substrate **301**.

[0058] In some configurations, the plasma aperture electrode **511** is maintained at a negative potential (e.g., DC, AC or RF potential) by the optional power source **521** and thus the plasma potential formed by the plasma generation source **272** is adjusted relative to the plasma aperture electrode **511**, so that a ready supply of ions can be generated and sustained in the plasma **335** and allow a portion of the formed ions to be extracted by the relative bias formed between the plasma aperture electrode **511** and the plasma **335**. The ions formed in the plasma **335** may enter the aperture **321** formed in the plasma aperture electrode **511** at an initial energy of, for example, about 10 eV to about 5 keV. The energy of the ions entering the aperture **321** formed in the plasma aperture electrode **511** may be adjusted by altering the bias applied to the plasma aperture electrode **511** by the power source **521**.

[0059] The ions entering the aperture **321**, which now form part of the forming particle beam **205**, are accelerated (e.g., increased kinetic energy) due to the forward bias applied between the plasma aperture electrode **511** and the steering electrodes **513** by either or both of the power sources **531** and **532**. In general, a "forward bias" will include the application of a bias that causes the ions in the particle beam to be accelerated as they pass from the plasma aperture electrode **511** to the local ground electrode **512**. In one example, for cases where the ions generated in the plasma **335** have a positive charge the relative bias applied between the plasma aperture electrode **511** and at least one of the steering electrodes **513** may be on the order of a negative 5 to 15 keV, such as about 10 keV.

[0060] The energy of the charged particles passing through the slit formed in, or between, the steering electrodes **513** is then affected by the relative bias created between the steering electrodes **513** and the local ground electrode **512**. Typically, the relative bias formed between the steering electrodes **513** and the local ground electrode **512** will be a decelerating field. Also, in general, it is desirable for the local ground electrode **512** and the substrate **301** to be maintained at the same potential. In one example, the local ground electrode **512** and the substrate **301** are maintained a ground potential. Typically, one or more conductive elements **552** formed in the substrate support assembly **371** are used to control the relative bias generated between the substrate **301** and the local ground electrode **512**. The plurality of conductive elements **552**, which may be disposed in a dielectric material **551** within the substrate support assembly **371**, may be in electric communication with a surface of the substrate **301**. In one example,

the conductive elements **552** may include metallic elements formed on a substrate supporting surface of the substrate support assembly **371**, or are formed by use of separate conductive lift pins or other chamber elements found within the processing chamber **300**.

[0061] Referring back to FIG. **5**A, in some configurations, it is desirable to adjust the potential applied to the local ground electrode **512** and the steering electrodes **513** by the power source **523** (e.g., DC or RF potential) such that the potential versus earth ground is at a desirable level. In some cases, the relative bias formed between the steering electrodes **513** and the local ground electrode **512** is used to decelerate (e.g., reduced kinetic energy) the charged particles found in the forming particle beam **205**. In the case where a decelerating field is desired, and the charged particles in the forming particle beam **205** are positively charged, the relative bias formed between the steering electrodes **513** and the local ground electrode **512** is positive, or in other words is less negative than the bias created between the plasma aperture electrode **511** and the steering electrodes **513**.

[0062] Upon reaching the slit, or aperture, formed in the local ground electrode **512**, the particle beam **205** may have an energy of, for example, approximately 0.1 keV and about 20 keV. In another example, the particle beam **205** energy may be between about 5 keV and about 10 keV. The particles exiting the slit, or aperture, formed in the local ground electrode **512** will then flow to and strike the exposed surface of the substrate so as to cause a modification to the surface of the substrate (e.g., planarize the surface of the substrate). In one case, the particles in the formed particle beam **205** "drift" at the kinetic energy achieved at the exit of the slit formed in the local ground electrode **512** to the surface of the substrate. In another case, the source **363** in the bias assembly **360** is used to alter the energy of the ions in the particle beam **205** by applying a bias to the support electrode **364** (e.g., apply a DC or RF bias potential).

[0063] In some embodiments, the electrode assembly **273** may also include an electric field control assembly **540** that is adapted to actively or passively control the shape of the field lines generated by the beam delivery element **322**. Control of the shape of the field lines generated by the components within the beam delivery element **322** can be useful to effectively control the trajectory of the charged particles formed in the particle beam **205**. In one configuration, the electric field control assembly **540** includes a control element **542** that may include a layer of a dielectric material, semiconductor material or conductive material that is positioned between the components found within the beam delivery element **322** and the substrate **301** to alter the shape of the electric field lines that extend through the processing region **310** of the process chamber **300**. The control element **542** may be positioned adjacent to or near the various components found within the beam delivery element **322**.

[0064] In one configuration, the electric field control assembly **540** includes a control element **542** that is electrically coupled to one or more of the steering electrodes **513** (FIG. **5**B) so that the control element **542** is maintained at the same potential as the one or more of the steering electrodes **514**, **515**. In one example, the control element **542** may include a conductive mesh or grid that is used to inhibit formation of or alter the shape of the electric field lines that extend through the processing region **310**.

[0065] In another configuration, the electric field control assembly **540** includes a control element **542** that is separately biased by a power source **541** to actively control the shape of the electric field lines that extend through the processing region **310** by use of commands sent from the system controller **390**. In this configuration, the control element **542** is separately biased to a potential that may be different than the potential applied to the steering electrode(s) **514**, **515** to alter the shape of the electric field lines that extend through the processing region **310**. In case where the extracted ions have a positive charge the bias applied to the control element **542** will have a negative potential, and where the extracted ions have a negative charge the bias applied to the control element **542** may have a positive potential.

[0066] In some embodiments, a bias can be applied to one or more of the steering electrodes **513** to alter the trajectory of the particle beam **205** in a desired direction. FIG. **5**B is a schematic cross-sectional view of a portion of the beam delivery element **322** that is found within the beam extraction assembly **270**, according to an embodiment described herein. In one configuration, by applying a bias to either the first steering electrode **514** or the second steering electrode **515** the trajectory of the particle beam **205**, and thus its exiting direction, can be altered. In one example, by applying a larger forward bias to the first steering electrode **514** by the power source **532** versus the bias applied to the second steering electrode **515** by the power source **531**, the particle beam will tend to deflect towards the surface **514**A of the first steering electrode **514** to form the particle beam **205**A. Alternately, by applying a larger forward bias to the second steering electrode **515** by the power source **531** versus the bias applied to the first steering electrode **514** by the power source **532** the beam will tend to deflect towards the surface **515**A of the second steering electrode **515** to form the particle beam **205**B.

[0067] In one configuration of the electrode assembly **273**, as illustrated in FIG. **5**B, the position of the first steering electrode **514** and/or the second steering electrode **515** relative to the particle beam **205** may be adjusted by use of an actuator **560** (e.g., linear servo motor). In some cases, the actuator **560** is able to move either or both of the steering electrodes **514**, **515** and the local ground electrode **512** relative to the center of the aperture **321** formed in the beam delivery element **322** to adjust the trajectory of the particle beam **205** exiting the electrode assembly **273**. Therefore, in some cases by applying a desirable bias to either of the steering electrodes **514**, **515** and/or adjusting the position of either of the steering electrodes **514**, **515** and local ground electrode **512** relative to the center of the aperture **321** the trajectory, or direction, of the particle beam **205** can be adjusted as desired.

[0068] FIG. **6**A, is a schematic side view of an alternate configuration of a particle beam generating assembly, according to an embodiment described herein. The beam delivery element **322** in this case is formed in convex shape, and is similarly coupled to the beam controller **350** (not shown) that is found within the beam extraction assembly **270**. As shown, the extraction assembly **270** includes a "triode" assembly that is configured to extract charged particles generated in the plasma generation region **332**, and form and deliver one or more particle beams, such as particle beams $\mathbf{205}_1$, $\mathbf{205}_2$ and $\mathbf{205}_3$, to a surface of a substrate **301** through one or more apertures **321** formed in the beam delivery element **322**. In this configuration, the beam delivery element **322** will generally includes at least a plasma aperture electrode **611**, a local ground electrode **612** and steering electrodes **613** that are connected to various biasing components found in the beam controller **350**, as similarly discussed above. The steer-

ing electrodes **613** may include steering electrodes $\mathbf{614}_1$-$\mathbf{614}_3$ and $\mathbf{615}_1$-$\mathbf{615}_3$ that are each connected to separate biasing components (not shown) found in the beam controller **350** to separately control the trajectory and energy provided to each of the generated particle beams $\mathbf{205}_1$, $\mathbf{205}_2$ and $\mathbf{205}_3$. In some configurations, the plasma aperture electrode **611** and/or the local ground electrode **612** may also be segmented, such that a different bias can be applied to each of the beams $\mathbf{205}_1$-$\mathbf{205}_3$ to control the amount of energy ultimately delivered to the substrate by each particle beam. In one example, the beam delivery element **322** includes a particle beam $\mathbf{205}_1$ that is oriented at a normal angle to the surface of the substrate and at least one other particle beam $\mathbf{205}_2$ or particle beam $\mathbf{205}_3$ that is at angle to the surface other than normal to the surface. The beam $\mathbf{205}_1$ that is directed at a normal or near normal angle will typically have a high sputter yield (or material removal efficiency), while the other particle beam $\mathbf{205}_2$ or particle beam $\mathbf{205}_3$ will tend to have a better smoothing efficiency. The planarization process performed by use of the two particle beams that are delivered at two different angles can provide a plasma modification process that is able to rapidly plasma planarize a surface of a substrate, and also shape the substrate surface so that it has a desirable flatness and surface smoothness.

[0069] FIG. **6**B, is a schematic side view of another configuration of a particle beam generating assembly, according to an embodiment described herein. The beam delivery element **322** in this case is formed in a spherical shape, and is similarly coupled to the beam controller **350** (not shown) that is found within the beam extraction assembly **270**. While not intending to limit to the illustrated spherical shaped beam delivery element **322** configuration, in one example, the beam extraction assembly **270** is configured to form and deliver two particle beams $\mathbf{205}_1$ and $\mathbf{205}_2$ that are each delivered at an angle to a surface of a substrate **301**. In this configuration, the beam delivery element **322** will generally includes at least a plasma aperture electrode **611**, a local ground electrode **612** and steering electrodes **613** that are connected to various biasing components found in the beam controller **350**, as similarly discussed above. The steering electrodes **613** may include steering electrodes $\mathbf{614}_1$-$\mathbf{614}_2$ and $\mathbf{615}_1$-$\mathbf{615}_2$ that are connected to separate biasing components found in the beam controller **350** to separately control the trajectory and energy provided to each of the generated particle beams $\mathbf{205}_1$ and $\mathbf{205}_2$. In some configurations, the second electrode may be segmented (e.g., local ground electrodes $\mathbf{612}_1$ and $\mathbf{612}_2$), such that a different bias can be applied to each of the particle beams $\mathbf{205}_1$-$\mathbf{205}_2$ to control the amount of energy ultimately delivered to the substrate by each beam.

[0070] FIGS. **6**C and **6**D are schematic plan views of some examples of shapes of particle beams **205** that may be formed by one or more of the beam extraction assemblies described herein. While most of the schematic representations of the particle beam **205** provided herein have a linear shape, such as the particle beams **205** shown in FIGS. **4**, **8**, **9** and **12**, this configuration is not intended to be limiting as to the scope of the invention provided herein. As illustrated in FIG. **6**C, in some cases, the particle beam **205** has a non-linear shape, such as a curved or arcuate shape when it strikes the surface of the substrate. In another example, as illustrated in FIG. **6**D, the particle beam **205** is shaped to from a multiple segmented curve when it strikes the surface of the substrate. The shape of the particle beam **205** that strikes the surface of the substrate may also be controlled by adjusting the formed shape of the slit(s) **321** found in the beam delivery element **322** and/or by use of multi-segmented steering electrodes **514**, **515** (FIGS. **5**A-**5**B) that are disposed adjacent to an aperture (e.g., used to alter the trajectory of various parts of a single ribbon beam) formed in the beam extraction assembly **270**.

[0071] In some configurations of the processing chamber **300**, an plasma modification process endpoint detection technique is used to determine when the planarization process is complete. In one configuration, the endpoint detection technique includes an optical endpoint monitoring system **376** that is able to detect when a layer on the surface of the substrate has been removed or when a property of the material found within the processing region **310** has changed due to the completion of the plasma modification process. In one example, the property of the material within processing region may change as the gas phase concentration in the processing region changes after an upper most layer has been substantially removed from the substrate and a next underlying layer on the substrate is exposed to the particle beam **205**. In general, an optical monitoring system that is able to detect an endpoint may include a light source (not shown), a light detector (not shown), and sensing circuitry (not shown) that is used to send and receive signals between a remote controller (e.g., system controller **390**) and the light source and a light detector. In one aspect, a method of detecting an endpoint includes performing the plasma modification process on a first layer formed on a substrate, and during processing, obtaining a sequence over time of measured optical spectra with the optical monitoring system. The measured optical spectrum can then be compared with previously stored spectrum and/or other stored parameters that are used to determine the endpoint, which can then be used to decide when to stop the plasma modification process. In another configuration, optical monitoring system is able to detect an endpoint by use of reflectometry process, where the optical monitoring system includes a light source (not shown), a light detector (not shown), and sensing circuitry (not shown) that are used to send and receive signals that are reflected off of the processed surface of the substrate. The measured optical signals used in the reflectometry end point sensing process can then be compared with previously stored data and/or other stored parameters so that the system controller can determine when to stop the plasma modification process.

Cluster Tool Configuration Examples

[0072] FIG. **7** is a plan view of a processing system **700** that may be used to perform one or more substrate processing steps in accordance with one embodiment of the present invention. One or more of the processing chambers found in the processing system **700** are adapted to perform the plasma modification process that is described herein. The processing system **700** generally creates a processing environment where various processes can be performed on a substrate, such as the particle beam modification process. The processing system **700** generally include a system controller **702** programmed to carry out various processes performed in the processing system **700**.

[0073] The system controller **702** may be used to control one or more components found in the processing system. In some configurations, the system controller **702** may form part of the system controller **390**, which is discussed above. The system controller **702** is generally designed to facilitate the control and automation of the processing system **700** and typically includes a central processing unit (CPU) (not

shown), memory (not shown), and support circuits (or I/O) (not shown). The CPU may be one of any form of computer processors that are used in industrial settings for controlling various system functions, substrate movement, chamber processes, and control support hardware (e.g., sensors, robots, motors, lamps, etc.), and monitor the processes performed in the system (e.g., substrate support temperature, power supply variables, chamber process time, I/O signals, etc.). The memory is connected to the CPU, and may be one or more of a readily available memory, such as random access memory (RAM), read only memory (ROM), floppy disk, hard disk, or any other form of digital storage, local or remote. Software instructions and data can be coded and stored within the memory for instructing the CPU. The support circuits are also connected to the CPU for supporting the processor in a conventional manner. The support circuits may include cache, power supplies, clock circuits, input/output circuitry, subsystems, and the like. A program (or computer instructions) readable by the system controller **702** determines which tasks are performable on a substrate in one or more of the process chambers and in the processing system **700**. Preferably, the program is software readable by the system controller **702** that includes code to perform tasks relating to monitoring, execution and control of the movement, support, and/or positioning of a substrate along with the various process recipe tasks and various chamber process recipe steps being performed in the processing system **700**.

[0074] The processing system **700** includes a plurality of processing chambers **704**, **706**, **708**, **710** that are coupled to a transfer chamber **712**. Each processing chamber **704**, **706**, **708**, **710** may be configured to process one or more substrates **301** at a time. The processing chamber **704**, **706**, **708**, **710** may have the same or different substrate processing capacities. For example, the processing chamber **704** and **706** can simultaneously process six substrates, while processing chambers **708** and **710** may be adapted to process one or more substrates at a time.

[0075] The processing system **700** may also include load lock chambers **716** and **724** that are connected to the transfer chamber **712**. In one embodiment, the load lock chambers **716** and **724** may also be used as one or more service chambers for providing various functions for processing within the processing system **700**, for example, substrate orientation, substrate inspection, heating, cooling, degassing, or the like. The transfer chamber **712** defines a transfer volume **752**. A substrate transfer robot **714** is disposed in the transfer volume **752** for transferring substrates **301** among the processing chambers **704**, **706**, **708**, **710**, the load lock chambers **716** or **724**. The transfer volume **752** is in selective fluid communication with the processing chambers **704**, **706**, **708**, **710**, the load lock chambers **716** and **724** via slit valves **744**, **746**, **748**, **750**, **742** respectively. In one example, the transfer volume **752** may be maintained at a sub-atmospheric pressure while the substrates are transferred through the processing system **700**.

[0076] The processing system **700** includes a factory interface **718** connecting one or more pod loaders **722** and the load lock chambers **716** and **724**. The load lock chambers **716** and **724** provides a first vacuum interface between the factory interface **718** and the transfer chamber **712**, which may be maintained in a vacuum state during processing. Each pod loader **722** is configured to accommodate a cassette **728** for holding and transferring a plurality of substrates. The factory interface **718** includes a Fl robot **720** configured to shuttle substrates between the load lock chambers **716** and **724**, and the one or more pod loaders **722**.

[0077] The substrate transfer robot **714** includes a robot blade **730** for carrying one or more substrates **301** among the processing chambers **704**, **706**, **708**, **710**, the load lock chamber **716** and **724**, and loading/unloading each chamber.

[0078] Each processing chamber **704**, **706**, **708**, **710** may be configured to perform the plasma modification process described herein. However, in one embodiment of the processing system **700**, the process chambers **704** and **706** are adapted to perform the plasma modification process on a plurality of substrates using a plurality of beam extraction assembly **270**. In one configuration process chambers **708** and **710** may each be adapted to perform one or more preprocessing steps on the substrates **301** before they are inserted into either processing chamber **704** or **706**, or post-processing steps on the substrates **301** after they have been processed in either processing chamber **704** or **706**. Examples, of the preprocessing or post-processing steps are further described below in conjunction with FIG. **13**.

[0079] In one configuration of the processing system **700**, the processing chambers **704** and **706** each include a substrate conveyance assembly **707** that is configured to retain and transport a plurality of substrates **301** that are retained within the processing regions **709** or **715** of the processing chambers **704** or **706**, respectively. In one example, each of the substrate conveyance assemblies **707** are adapted to retain six substrates **301** and rotate the substrates **301** about a central axis **711** of the processing chamber **704** or **706** by use of conventional rotational hardware components. The substrate conveyance assembly **707** is thus able to transfer and position the substrates **301** relative to each of the beam extraction assemblies **270** that are positioned to process substrates **301** found in the processing region **709** or **715** of the processing chamber **704** or **706**, respectively.

[0080] In some configurations, as illustrated in processing chamber **704** in FIG. **7**, each of the substrates **301** that are disposed on the substrate conveyance assembly **707** can be rotated relative to the beam extraction assembly **270** by use of a substrate rotation assembly **732**. The substrate rotation assembly **732** generally includes an actuator (not shown) that is configured to rotate a substrate supporting element (not shown) relative to the substrate conveyance assembly **707**.

[0081] However, in some embodiments, the particle beam **205** generated by each beam extraction assembly **270** may be rotated or translated relative to the surface of the substrate (e.g., X-Y plane). In this case, an actuator (not shown) that is found within each beam extraction assembly **270** is configured to rotate or translate the beam delivery element **322** (FIG. **3**) relative to the substrate to minimize any shadowing effects created by the orientation of features formed on the surface of the substrate.

[0082] During a process sequence performed in processing chamber **704**, for example, the transfer robot **714** delivers a substrate **301** to an open position on the substrate conveyance assembly **707** and then the substrate conveyance assembly **707** and system controller **702** work together to position the substrate **301** under one of the beam extraction assemblies **270** for processing. The transfer robot **714** may repeat this task of sequentially loading substrates until the all of the positions in the processing chamber **704** have been filled, and then a batch processing plasma modification processing sequence is performed on all of the substrates **301** at one time. After the substrate(s) have been sufficiently processed within

the processing chamber **704** the transfer robot **714** is configured to remove the substrate from the processing region **709**.

[0083] Alternately, in some cases, the transfer robot **714** may insert and remove substrates from the processing chamber **704** as needed, so that a sequentially performed plasma modification process can be performed on each substrate **301** that is serially loaded into the processing chamber **704**. In some processing configurations, the substrate conveyance assembly **707** is configured to sequentially position the received substrates under each of the beam extraction assemblies **270** so that at least a portion of the plasma modification processing sequence is performed on the substrate by each of the beam extraction assemblies **270** before the substrate exits the process chamber. In one configuration, each of the beam extraction assemblies **270** within the processing chamber **704** are configured to separately provide the same type of particle beam **205** to the surface of the substrate during the sequential process. In another configuration, two or more of the beam extraction assemblies **270** are each adapted to separately provide a particle beam **205** that has some different processing characteristic, such as beam energy, beam direction, beam composition (e.g., gas ions), or other useful property to the surface of the substrate. In general, the direction of the generated particle beam **205** exiting the beam extraction assemblies **270** can be defined in 3D space, and thus, in one example, can be at least partially defined by the beam angle (e.g., angle **210**) and the beam angle relative to the radial position of the substrate conveyance assembly **707**.

[0084] In some configurations of the processing chambers **704** or **706**, the area or region below each of the beam extraction assemblies **270** may be isolated from adjacent beam extraction assemblies **270**, so that different processing environments can be maintained below each beam extraction assembly **270**. In one configuration, an at least partially enclosed region (e.g., gas curtain or physical walls) is formed around each beam extraction assembly **270**, such that each of the substrates **301** can be positioned within the sub-processing region by the substrate conveyance assembly **707** and be separately processed by the beam extraction assembly **270**.

[0085] FIG. **8** is a plan view of a processing system **800** that may be used to perform one or more substrate processing steps in accordance with one embodiment of the present invention. The two processing chambers **802** and **804** found in the processing system **800** are adapted to perform at least part of the plasma modification process that is described herein. The processing chambers **802** and **804** are coupled to a transfer chamber **712**, which is described above. In this example, each processing chamber **802** and **804** is configured to process eight substrates **301** at a time. As similarly discussed above, the processing system **800** also includes a load lock chambers **716** and **724** that are connected to the transfer chamber **712**. A substrate transfer robot **714** is disposed in the transfer volume **752** for transferring substrates **301** among the processing chambers **802** and **804** and the load lock chambers **716** or **724**.

[0086] The processing chambers **802** and **804** may each include a substrate conveyance assembly **810** that is configured to retain and transport a plurality of substrates **301** that are retained within the processing regions of the processing chamber **802** or **804**, respectively. In one example, each of the substrate conveyance assemblies **810** are adapted to retain eight substrates **301** and rotate the substrates **301** about a central axis of the processing chamber **802** or **804** by use of conventional rotational hardware components. The substrate conveyance assembly **810** is thus able to transfer and position the substrates **301** relative to each of the particle beams **205** found in the processing region of the processing chamber **802** or **804**.

[0087] In some configurations, as illustrated in processing chamber **802** in FIG. **8**, each of the substrates **301** that are disposed on the substrate conveyance assembly **810** can be rotated relative to each of the particle beams **205** by use of a substrate rotation assembly **832**. The substrate rotation assembly **832** generally includes an actuator (not shown) that is configured to rotate a substrate supporting element (not shown) and substrate relative to the substrate conveyance assembly **810**.

[0088] Alternately, in some configurations, as illustrated in processing chamber **804** in FIG. **8**, each of the particle beams **205**, which are generated by a beam extraction assembly **270**, are oriented at an angle relative to the radial direction extending from the center of the processing chamber **804**. In this case, when the substrates **301** are rotated about the center of the processing chamber **804** any shadowing effects created by a variability in the orientation of the features formed on the surface of the substrate **301** can be accounted for, due to differing angle that the particle beam **205** is oriented relative to the substrate **301** as it is translated below each of the beam extraction assemblies **270** by the substrate conveyance assembly **810**. In one example, as illustrated in processing chamber **804** in FIG. **8**, the particle beam **205** is oriented at a progressively different angle relative to the radial direction of the processing chamber, as the substrate is rotated 360 degrees by the substrate conveyance assembly **810**.

[0089] FIG. **9** is a plan view of a processing system **900** that may be used to perform one or more substrate processing steps in accordance with one embodiment of the present invention. The processing chambers **902** found in the processing system **900** is adapted to perform at least part of the plasma modification process that is described herein. The processing chamber **902** is coupled to a transfer chamber **712** and is transferrable communication with the transfer robot **714**, which are described above. In this non-limiting example, the processing chamber **902** is configured to process sixteen substrates **301** at a time. As similarly discussed above, the processing system **900** also includes other processing chambers and load lock chambers that are connected to the transfer chamber **712**.

[0090] In one configuration of the processing system **900**, the processing chamber **902** includes a substrate conveyance assembly **904** that is configured to retain and transport a plurality of substrates **301** that are retained within the processing region of the processing chamber **902**. The substrate conveyance assemblies **904** is generally adapted to retain groups of substrates **301** and rotate (R_1) the groups of substrates **301** about a central axis of the processing chamber **902** by use of conventional rotational hardware components and rotate (R_2) each group of substrates relative to the center of a substrate support **905**, which supports the group of substrates, by use of conventional rotational hardware components. In some configurations, as illustrated in FIG. **9**, the groups of substrates **301** are each disposed on a substrate support **905** that are disposed on a group conveyance assembly **910** can each be rotated relative to the particle beam **205** by use of rotation assembly components. The rotation assembly components generally include an actuator (not shown) that is configured to rotate the substrate support **905** relative to the substrate conveyance assembly **910**. The substrate convey-

ance assemblies **910** is generally adapted to retain the hardware used to retain the groups of substrates **301** and rotate the groups of substrates **301** about a central axis of the processing chamber **902** by use of conventional rotational hardware components. The substrate conveyance assembly **910** is thus able to transfer and position the groups of substrates **301** relative to each of the particle beams **205** that are positioned to process substrates **301** found in the processing region of the processing chamber **902**. Therefore, during processing each of the substrates **301** can be rotated and/or translated relative to a particle beam **205**, which are generated by a beam extraction assembly **270**. In some configurations, the surfaces that the particle beam **205** are delivered to, which includes the surfaces of the substrates **301** and any substrate supporting hardware (e.g., substrate support **905**), are designed to reduce any particle contamination that would be generated by such exposure to the particle beam **205**. In some cases, the exposed surface of the substrate supporting hardware is formed from a material that is similar to the material that is to be removed from the substrate (e.g., silicon, GaAs, metals) or a material that has a very low sputter yield so as to not be affect by the exposure to the particle beam **205**.

[0091] FIG. **10** is a side view of a processing chamber **1000** that may be used to perform one or more substrate processing steps in accordance with one embodiment of the present invention. The processing chamber **1000** is adapted to perform at least part of the plasma modification process that is described herein. The processing chamber **1000** generally includes one or more beam extraction assemblies **270** that are each configured to deliver one or more particle beams **205** to a surface of a substrate **301**. In one example, as shown in FIG. **10**, the processing chamber **1000** includes three beam extraction assemblies **270** that are each configured to deliver a particle beam **205** to a surface of the substrate **301** as it is moved relative to the beam extraction assemblies **270** by use of an actuator **1020**. In this example, the beam extraction assemblies **270** are each spaced a distance from each other in a direction parallel to the transfer direction or perpendicular to a normal direction to the surface of the substrate and substrate support. The spaced apart beam extraction assemblies **270** can be used to simultaneously process different regions of the substrate at one time. In one configuration, the actuator **1020** may be a linear actuator that is configured to move the substrate **301** relative to the beam extraction assemblies **270**.

[0092] As similarly discussed above, each of the beam extraction assemblies **270** within the processing chamber **1000** may be configured to provide the same type of particle beam **205** to the surface of the substrate as the substrate **301** is moved relative to the beam extraction assemblies **270** by use of an actuator **1020**. In another configuration, two or more of the beam extraction assemblies **270** are adapted to provide a particle beam **205** that has some different processing characteristic, such as beam energy, beam angle (e.g., angle **210**), beam angle relative to the transfer direction of the substrate, beam composition (e.g., gas ions), or other useful property to the surface of the substrate. In some cases, it may be desirable to provide a higher energy and/or higher sputter yielding particle beam **205** to the surface of the substrate by a first beam extraction assembly **270** and then a less aggressive and more smoothing planarization process is preformed by the second and/or third beam extraction assemblies **270**.

[0093] FIG. **11** is a schematic side view of one embodiment of an processing system **1100** that can be used to perform at least part of the plasma modification process described herein, wherein the processing system **1100** has various processing chambers **1102**, **1104**, **1106**, **1108** and **1110** that are each used to perform some part of the plasma modification process on the substrates **301**. The processing system **1100** has a first end **1114** where substrates **301** enter the processing system **1100**, and a second end **1116** where processed substrates **301** exit the processing system **1100**. At the first end **1114** an input conveyor **1118** supports and guides substrates **301** into the first chamber **1102**. At the second end **1116**, an exit conveyor **1120** receives substrates **301** from the final chamber **1110**. A series of substrate transfer ports **1124** are provided at the entrance and exit of the apparatus and between each of the processing chambers **1102**, **1104**, **1106**, **1108** and **1110** to allow the substrates to pass between processing chambers, while maintaining the required environment within each chamber during processing. The processing chambers **1102**, **1104**, **1106**, **1108** and **1110** each include a gas delivery assembly that is used to control the processing environment within each chamber. The gas delivery assemblies may each include the pumping system **311** and the gas delivery source **317**, which are discussed above.

[0094] In one configuration, a series of intermediate conveyors **1122** support and guide the substrates through the various processing chambers. While the conveyor system has been shown with a number of individual conveyors **1118**, **1120** and **1122**, a single conveyor with a continuous web of material may be used. In one configuration, the conveyors include support rollers **1126** that support and drive the web(s) of material. When individual conveyors **1118**, **1120** and **1122** are used, the rollers **1126** may be mechanically driven by a common drive system (not shown) such that they are moved in unison, or individually. The various drives for the rollers **1126**, ports **1124** and other system actuators are provided by control signals from a system controller **702**, which as discussed above, may include memory **1107**, a CPU **1109** and supporting circuits **1111**. While in the embodiment illustrated in FIG. **11**, has five chambers, this is not intended to be limiting as to the scope of the invention, since any number of chambers may be provided depending on the number of processes and the required equipment for each process. In one embodiment, the processing system **1100** also contains at least one additional chamber (not shown) at either end **1114**, **1116** of the system that acts as a load lock to provide a buffer between the environment external to the processing chamber **300** and the processing regions of the processing chambers **1102-1110**.

[0095] In one configuration of the processing system **1100**, the processing chamber **1102** is adapted to perform one or more preprocessing steps on a substrate **301** before it is inserted into process chamber **1104** and the process chamber **1110** is adapted to perform one or more post-processing steps on the substrate **301** after it has been processed in at least one of the processing chambers **1104-1108**. Examples, of the preprocessing or post-processing steps are further described below in conjunction with FIG. **13**. In one configuration, the processing chambers **1102** and **1110** include one or more gas sources and/or energy delivery sources (e.g., sources **1161** and **1171**) that are able to deliver a processing gas and/or an amount of energy to a delivery component (e.g., components **1162** and **1172**), so that the preprocessing steps and post processing steps can be performed on the substrates **301**.

[0096] The processing chambers **1104-1108** are each adapted to perform at least a part of the plasma modification

process that is described herein. The processing chambers **1104-1108** will each generally include one or more beam extraction assemblies **270** that are configured to deliver one or more particle beams **205** to a surface of a substrate **301**. In one example, the processing chambers **1104-1108** include at least one beam extraction assembly **270** that is configured to deliver a particle beam **205** to a surface of the substrate **301** as it is moved relative to the beam extraction assembly **270** by use of a conveyor **1122**.

[0097] In some embodiments, each of the processes performed in each of the processing chambers **1104-1108** can be isolated from the other processing chambers due to the presence of an enclosure that surrounds the processing regions of each the processing chambers **1104-1108**. In some configurations, each of the ports **1124** separating the processing regions of each of the processing chambers can be selectively closed to physically isolate the processing regions of adjacent processing chambers. In one example, a slit valve or a gate valve is mounted at each port **1124** in the processing system **1100** to selectively isolate the processing environments of adjacent processing chambers. In one configuration, each of the processing chambers **1102-1110** each include an exhaust or pumping system **1131-1135**, respectively, to control the pressure and/or gas composition with the processing regions of each of the process chambers. Therefore, as similarly discussed above, each of the beam extraction assemblies **270** within the processing chambers **1104-1108** may be configured to provide the same or different type of particle beam **205** or particle beam processing environment as the substrate **301** is moved relative to the beam extraction assemblies **270** by use of the conveyors **1122**.

[0098] FIG. **12** is a plan view of a linear processing system **1200** that can be used to perform at least part of the plasma modification process described herein. The processing system **1200** includes processing chambers **1202**, **1204**, **1206**, **1208**, **1210** and **1212** that are each used to perform some part of the plasma modification process on the substrates **301**. The process chamber **1202** and the process chamber **1212** may each include some or all of the chamber components discussed above in conjunction with processing chamber **1102** and the processing chamber **1110**, respectively. The processing chambers **1204-1210** may each include some or all of the chamber components discussed above in conjunction with process chambers **1104-1108**.

[0099] As illustrated in FIG. **12**, the processing system **1200** includes a plurality of processing chambers **1204-1210** that are each adapted to perform at least part of the plasma modification process. In one example, each of the processing chambers **1204-1210** include one or more beam extraction assemblies (not shown) that are configured to deliver a particle beam **205** to a surface of a substrate **301**. In one configuration, each of the beam extraction assemblies are adapted to provide a particle beam **205** that has some different processing characteristic to the surface of the substrate. In one example, each of the beam extraction assemblies are adapted to provide a particle beam **205** that has a different beam angle relative to the transfer direction (i.e., X-direction) of the substrate. By varying the angular orientation of the particle beams **205** provided to the surface of the substrate in each process chamber, any shadowing effects created by the orientation of the features formed on the surface of the substrate can be reduced or minimized, which can improve the uniformity of the planarized surface of the substrate that was processed in the processing system **1200**.

Plasma Modification Process Examples

[0100] FIG. **13** is a block diagram illustrating a plasma modification processing sequence that may be performed on a substrate in one or more of the process chambers and/or processing system described above. In one embodiment, the processing sequence **1300** may all be performed in a processing system that is similar to the processing systems **700**, **800**, **900**, **1000**, **1100** or **1200**, which are discussed above in conjunction with FIGS. **7-12**. It is noted that the processing sequence depicted in FIG. **13** is only used as an example of a plasma modification process flow and thus is not intended to be limiting as to the scope of the invention disclosed herein. Additionally steps may be added in between any of the steps depicted in FIG. **13** as needed to improve the plasma modification process results. Similarly, one or more steps depicted herein may also be eliminated as needed.

[0101] In one embodiment, the processing sequence **1300**, starts at step **1302** in which an optional pre-planarization process is performed on a surface of a substrate. In general, the optional pre-planarization process step **1302** may include the use of a chemical mechanical polishing (CMP) process to remove at least a portion of the material disposed on the surface of the substrate prior to performing the plasma modification process step, or step **1304** on the substrate. The use of an initial CMP process step prior to performing plasma modification processing step **1304** may be useful to help remove some of the variation in the height of the features formed on the surface of an un-planarized substrate. In this case, the subsequent plasma modification processing step **1304** may only provide a fine planarization of the surface of the substrate, or in other words a "fine polishing" of the surface of the substrate.

[0102] In one embodiment of the processing sequence **1300**, the optional step **1302** may alternately or additionally include a wet or dry chemical cleaning process that is used to remove a portion of the surface of the substrate prior to performing the plasma modification processing step **1304**. In one example, an oxide layer or a contaminated layer may be removed from the surface of the substrate by use of one or more reactive species, such as delivering an etching gas or a cleaning solution to a surface of the substrate, to remove a portion of the material from the surface of the substrate.

[0103] Next, in step **1304**, a plasma modification process is performed on an exposed surface of a substrate to make the outer surface of the substrate relatively flat and/or smooth. As discussed above, the step **1304** may include the delivery of an energetic particle beam that includes a spatially localized group of energetic particles that are directed towards a surface of a substrate for a desired period of time. The plasma modification process may include the simultaneous and/or sequential delivery of a plurality of particle beams **205** to a surface of the substrate. Each of the delivered particle beams may have different processing characteristic, such as beam energy, beam angle, beam composition (e.g., gas ions), or other useful property.

[0104] In some embodiments, step **1304** includes the delivery of at least one energetic particle beam to a surface of a substrate in multiple sequential processing steps to planarize the surface of the substrate. As noted above, the multiple sequential processing steps may be performed in a single plasma modification processing chamber or in multiple plasma modification processing chambers. Also, as discussed above, the particle beam modification process performed in step **1304** may include the use of physical and/or chemical

material planarization processes performed in a single process step or in one or more of the multiple sequential processing steps.

[0105] Referring to FIGS. **3** and **13**, step **1304** may include, for example, the following sub-process steps. First, one or more gas sources **341** deliver one or more inert and/or reactive gases to the plasma generation region **332**. The plasma generation source **272** then delivers an amount of electromagnetic energy to the delivered process gas to form the plasma in the plasma generation region **332**. The electrode assembly **273** and system controller **390** are then used to extract ions found within the plasma generation region **332** to form, control and deliver one or more particle beams **205**, which each have desirable particle beam properties, to a surface of a substrate **301** that is disposed on a substrate support within the processing region **310** of the processing chamber **300**. In some configurations of step **1304**, the system controller **390**, pumping system **311** and gas delivery source **317** are used in combination to control the processing environment within the processing region **310**. The gas delivery source **317** and pumping system **311** are typically used to control the pressure and/or gas composition of the processing environment found within the processing region **310**. In some cases, the processing environment may include either an inert and/or substrate etchant containing gas to promote the plasma modification process. During step **1304**, the substrate and/or the one or more energetic particle beams **205** may be moved relative to each other to enhance the plasma modification process. Next, after the system controller **390** receives a signal from the endpoint monitoring system **376**, or by simply reaching a desired time that the substrate is exposed to the one or more energetic particle beams **205**, the plasma modification process performed in step **1304** is stopped.

[0106] Next, in step **1306**, an optional cleaning process is performed on substrate after step **1304** has been performed. In this step, the substrate is cleaned to remove any undesirable materials left over from the prior processing steps. In some configurations, step **1306** includes the delivery of a cleaning gas (e.g., dry cleaning process) to a surface of the substrate in a processing chamber that is disposed on a processing system (e.g., processing systems **700**, **800**, **900**, **1000**, **1100** or **1200**) that contains a processing chamber that is adapted to perform step **1304**. In one example, step **1306** may include the use of a reactive ion etching (RIE) or a plasma assisted dry etching process that is provided to a surface of the substrate to clean and/or remove any residual contamination found on the surface of the substrate. Alternately, step **1306** may include an ex-situ cleaning process that includes the delivery of a wet cleaning solution to a surface of the substrate to remove any undesirable materials from the surface of the substrate. In this case, the substrate may be cleaned using a wet cleaning process in which a cleaning solution, such as a HF-last type cleaning solution, ozonated water cleaning solution, hydrofluoric acid (HF) and hydrogen peroxide (H_2O_2) solution, DI water, or other suitable cleaning solution. In some embodiments of the processing sequence **1300**, step **1306** may be performed after performing step **1308**, which is discussed below.

[0107] Next, at step **1308**, an optional post-planarization process is performed on the substrate after step **1304** has been performed. In one configuration, the optional post-planarization process step **1308** may include the use of a chemical mechanical polishing (CMP) process to remove at least a portion of the material disposed on the surface of the substrate after performing step **1304** on the substrate. The CMP process in this case may be useful to help remove and further planarize some of the features formed on the surface of the substrate. In this case, the plasma modification process completed in step **1304** may provide a rapid and/or partial planarization of the surface of the substrate, and the post-planarization process step **1308** provides the final planarization clean-up of the surface of the substrate. The CMP type post-planarization process step may be used to remove any islands or other unwanted material left on the surface of the substrate leftover from the previous plasma modification process step **1304**.

[0108] In one embodiment of the processing sequence **1300**, the optional step **1308** may alternately or additionally include a deposition process step that is used to "cap" the surface of the substrate after performing the plasma modification processing step **1304**. In one example, deposition process may include the deposition of a conductive (e.g., titanium layer, tantalum layer), a semiconductive (e.g., silicon, GaAs, III-V layer) or a dielectric layer (e.g., SiO_2, SiN) over the surface of the previously processed surface of the substrate. In some configurations, step **1308** includes the formation of a layer on a surface of the substrate in a processing chamber that is disposed in a processing system (e.g., processing systems **700**, **800**, **900**, **1000**, **1100** or **1200**) that contains a processing chamber that is adapted to perform step **1304**. In some examples, the deposition process may be completed by performing a deposition process in a processing chamber that is configured to perform a plasma enhanced chemical vapor deposition (PECVD) process, low pressure chemical vapor deposition (LPCVD) process, hot wire chemical vapor deposition (HWCVD) process, atomic layer deposition (ALD) process, physical vapor deposition (PVD) process, and/or other similar deposition process.

[0109] Embodiments of the disclosure provided herein may thus provide a processing sequence **1300** that includes steps **1302** and **1304**, which are discussed above. Some embodiments of the disclosure may provide a processing sequence **1300** that includes steps **1302**, **1304** and **1308**. Some embodiments of the disclosure may also provide a processing sequence **1300** that includes steps **1304** and **1308**. Some embodiments of the disclosure may also provide a processing sequence **1300** that includes steps **1304** and **1306**. Some embodiments of the disclosure may also provide a processing sequence **1300** that includes steps **1304**, **1306** and **1308**. Some embodiments of the disclosure may also provide a processing sequence **1300** that includes steps **1304**, **1308** and **1306**, which are performed in that processing order. Some embodiments of the disclosure may also provide a processing sequence **1300** that includes steps **1302**, **1304**, **1306** and **1308**, where steps **1306** and **1308** are performed in any desirable processing order. Some embodiments of the disclosure may also provide a processing sequence **1300** that only includes step **1304**.

[0110] While the foregoing is directed to embodiments of the present invention, other and further embodiments of the invention may be devised without departing from the basic scope thereof, and the scope thereof is determined by the claims that follow.

1. An apparatus for modifying a surface of a substrate, comprising:

a substrate support having a substrate supporting surface, wherein a first direction is perpendicular to the substrate supporting surface;

a first beam extraction assembly configured to simultaneously generate:

a first particle beam that exits the first beam extraction assembly in a second direction, wherein the first particle beam is directed towards the substrate supporting surface and the second direction is at a first grazing angle relative to the first direction; and

a second particle beam that exits the first beam extraction assembly in a third direction, wherein the second particle beam is directed towards the substrate supporting surface and the third direction is at the first grazing angle or a second grazing angle relative to the first direction; and

an actuator that is configured to translate the substrate supporting surface relative to the first and the second particle beams.

2. The apparatus of claim **1**, wherein the first grazing angle or the second grazing angle are between about 70 and about 80 degrees.

3. The apparatus of claim **1**, further comprising:

a second beam extraction assembly that is positioned a distance in a fourth direction from the first beam extraction assembly, wherein the fourth direction is perpendicular to the first direction, and the second beam extraction assembly is configured to simultaneously generate:

a third particle beam that exits the second beam extraction assembly in a fifth direction, wherein the third particle beam is directed towards the substrate supporting surface and the fifth direction is at a third grazing angle relative to the first direction; and

a fourth particle beam that exits the second beam extraction assembly in a sixth direction, wherein the fourth particle beam is directed towards the substrate supporting surface and the sixth direction is at the third grazing angle or a fourth grazing angle relative to the first direction,

wherein the actuator that is configured to translate the substrate supporting surface of the substrate support relative to the third and fourth particle beams.

4. The apparatus of claim **1**, wherein the first beam extraction assembly further comprises a first steering electrode that can be biased by a first power source, wherein altering the bias applied by the first power source changes the magnitude of the first grazing angle.

5. The apparatus of claim **1**, further comprises:

an electric field control assembly that comprises a control element, which is positioned between the first beam extraction assembly and the substrate support.

6. The apparatus of claim **1**, further comprises:

an RF power source; and

a support electrode that is positioned to generate a plasma in a processing region defined between the first beam extraction assembly and the substrate support when the support electrode is biased by the RF power source.

7. The apparatus of claim **1**, wherein the first beam extraction assembly further comprises:

a first electrode having a first aperture that is positioned to receive charged particles formed in a plasma generation region of the first beam extraction assembly;

a second electrode having a second aperture that is positioned to receive a flow of the charged particles that pass through the first aperture, wherein the flow of the charged particles form at least part of the first particle beam;

a field shaping power source is configured to apply a bias to a control element disposed between the first beam extraction assembly and the substrate support; and

a system controller that is configured to adjust an electrical bias applied by the field shaping power source during processing.

8. A method of planarizing a surface of a substrate in a processing region of a processing chamber, comprising:

delivering a first particle beam from a beam extraction assembly towards a substrate disposed on a substrate supporting surface of a substrate support, wherein the delivered first particle beam is provided in a first direction that is at a first grazing angle relative to a second direction which is perpendicular to the substrate supporting surface;

delivering a second particle beam from the beam extraction assembly towards the substrate supporting surface, wherein the delivered second particle beam is provided in a third direction that is at the first grazing angle or a second grazing angle relative to the second direction; and

moving the substrate relative to the first and second particle beams, or moving the first and second particle beams relative to the substrate, to reduce the non-planarity of a non-planar surface formed on the substrate.

9. The method of claim **8**, further comprises:

delivering a etching gas to a processing region in which the substrate is disposed while substrate is moved relative to the delivered first and second particle beams, wherein the etching gas comprises a gas selected from the group of chlorine (Cl_2), fluorine (F_2), bromine (Br_2) and iodine (I_2), and ammonia (NH_3).

10. The method of claim **8**, further comprises:

polishing the non-planar surface of the substrate prior to positioning the substrate to receive the at least a portion of the formed particle beam, wherein polishing the non-planar surface comprises performing a chemical mechanical planarization process.

11. The method of claim **8**, wherein delivering the first particle beam towards the substrate further comprises:

delivering electromagnetic energy to a process gas that is disposed in a plasma generation region of a processing chamber, wherein delivering the electromagnetic energy ionizes at least a portion of the process gas disposed in the plasma generation region;

biasing a first electrode that has a first aperture formed therein, wherein biasing the first electrode causes at least a portion of the charged particles to pass through the first aperture;

biasing a second electrode that has a second aperture formed therein, wherein biasing the second electrode causes the portion of the charged particles passing through the first aperture to be accelerated as the portion of the charged particles passes between the first aperture and the second aperture, wherein the portion of the charged particles passing through second aperture forms at least part of the formed first particle beam; and

applying a bias to a control element, wherein the control element is positioned between the beam extraction assembly and the substrate, and biasing the control element is configured to alter an electric field generated by separately applying a bias to the first electrode or the second electrode.

12. The method of claim **11**, further comprises:
adjusting the position of the second aperture relative to the first aperture to alter the path of the formed particle beam.

13. An system for planarizing a surface of a substrate, comprising:
a transfer chamber having a transfer region;
a first process chamber that is coupled to the transfer chamber, wherein the first process chamber comprises:
a substrate support having a substrate supporting surface, wherein a first direction is perpendicular to the supporting surface;
a first beam extraction assembly configured to simultaneously generate:
a first particle beam that exits the first beam extraction assembly in a second direction, wherein the first particle beam is directed towards the substrate supporting surface and the second direction is at a first grazing angle relative to the first direction; and
a second particle beam that exits the first beam extraction assembly in a third direction, wherein the second particle beam is directed towards the substrate supporting surface and the third direction is at the first grazing angle or a second grazing angle relative to the first direction;
an actuator that is configured to translate the substrate supporting surface of the substrate support relative to the first and the second particle beams;
a second process chamber that is coupled to the transfer chamber, wherein the second process chamber configured to deposit a layer on the substrate; and
a substrate transfer robot disposed in the transfer region, and configured to load and unload substrates disposed in the first processing chamber and the second processing chamber.

14. The system of claim **13**, wherein the first process chamber further comprises:
a second beam extraction assembly that is positioned a distance in a fourth direction from the first beam extraction assembly, wherein the fourth direction is perpendicular to the first direction, and the second beam extraction assembly is configured to simultaneously generate:
a third particle beam that exits the second beam extraction assembly in a fifth direction, wherein the third particle beam is directed towards the substrate supporting surface and the fifth direction is at a third grazing angle relative to the first direction;
a fourth particle beam that exits the second beam extraction assembly in a sixth direction, wherein the fourth particle beam is directed towards the substrate supporting surface and the sixth direction is at the third grazing angle or a fourth grazing angle relative to the first direction; and
wherein the actuator that is configured to translate the substrate supporting surface of the substrate support relative to the third and fourth particle beams.

15. The system of claim **13**, wherein the first beam extraction assembly further comprises a first steering electrode that can be biased by a first power source, wherein altering the bias applied by the first power source changes the magnitude of the first grazing angle.

16. The system of claim **13**, further comprises:
an electric field control assembly that comprises a control element, which is positioned between the first beam extraction assembly and the substrate support.

17. The system of claim **13**, further comprises:
an RF power source; and
a support electrode that is positioned to generate a plasma in a processing region defined between the first beam extraction assembly and the substrate support when the support electrode is biased by the RF power source.

18. The system of claim **13**, wherein the first beam extraction assembly further comprises:
a first electrode having a first aperture that is positioned to receive charged particles formed in a plasma generation region of the first beam extraction assembly;
a second electrode having a second aperture that is positioned to receive a flow of the charged particles that pass through the first aperture, wherein the flow of the charged particles form at least part of the first particle beam;
a field shaping power source is configured to apply a bias to a control element disposed between the first beam extraction assembly and the substrate support;
a system controller that is configured to adjust an electrical bias applied by the field shaping power source during processing; and
a third electrode having a third aperture that is positioned to receive the flow of charged particles that was received by the second aperture.

* * * * *