US 20220035245A1

(19) **United States**

(12) **Patent Application Publication**

(10) **Pub. No.: US 2022/0035245 A1**

(43) **Pub. Date: Feb. 3, 2022**

MCMACKIN et al.

(54) **NANO IMPRINT STAMPS**

(71) Applicant: **Applied Materials, Inc.**, Santa Clara, CA (US)

(72) Inventors: **Ian Matthew MCMACKIN**, Mountain View, CA (US); **Ludovic GODET**, Sunnyvale, CA (US)

(21) Appl. No.: **17/034,004**

(22) Filed: **Sep. 28, 2020**

Related U.S. Application Data

(60) Provisional application No. 63/059,809, filed on Jul. 31, 2020.

Publication Classification

(51) **Int. Cl.**

G03F 7/00	(2006.01)
B29C 33/42	(2006.01)
B29C 43/02	(2006.01)

(52) **U.S. Cl.**

CPC ***G03F 7/0002*** (2013.01); *B82Y 40/00* (2013.01); ***B29C 43/021*** (2013.01); ***B29C 33/424*** (2013.01)

(57) **ABSTRACT**

An apparatus for manufacturing a nano-imprint lithography stamp from a master template stamp, including a stamp chuck configured to selectively secure a stamp backing material thereto, a master chuck configured to support a master template stamp, the master template stamp including a master pattern thereon, the master chuck configured to support the master template stamp in facing relationship to the stamp backing material when selectively secured to the stamp chuck, wherein the master template stamp includes an electromagnetic energy curable material on and in the master pattern, and the stamp chuck is configured and arranged to position a portion of the backing material thereon spaced therefrom and in contact with the electromagnetic energy curable material, and the stamp chuck is further configured to position the portion of the backing material in contact with the energy curable material, after it is cured, in contact with the stamp chuck.

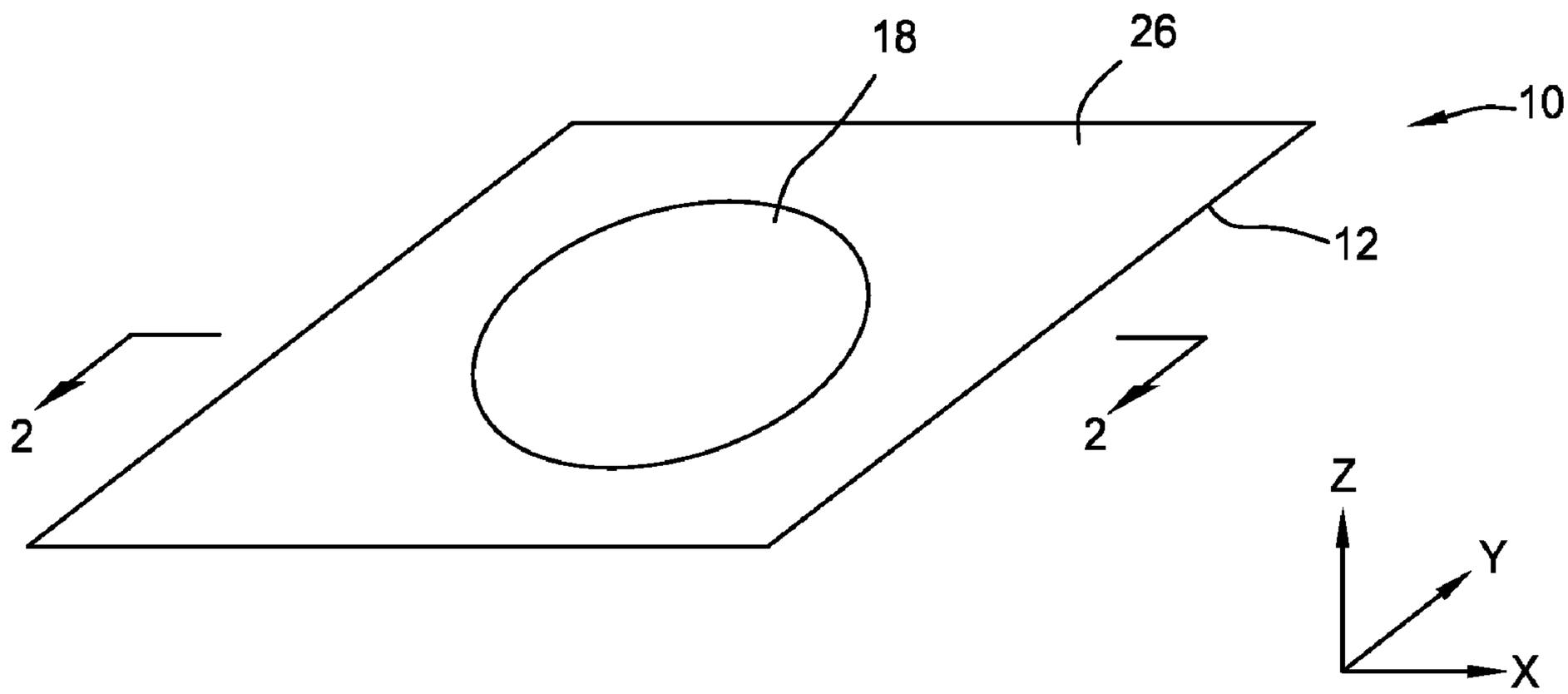

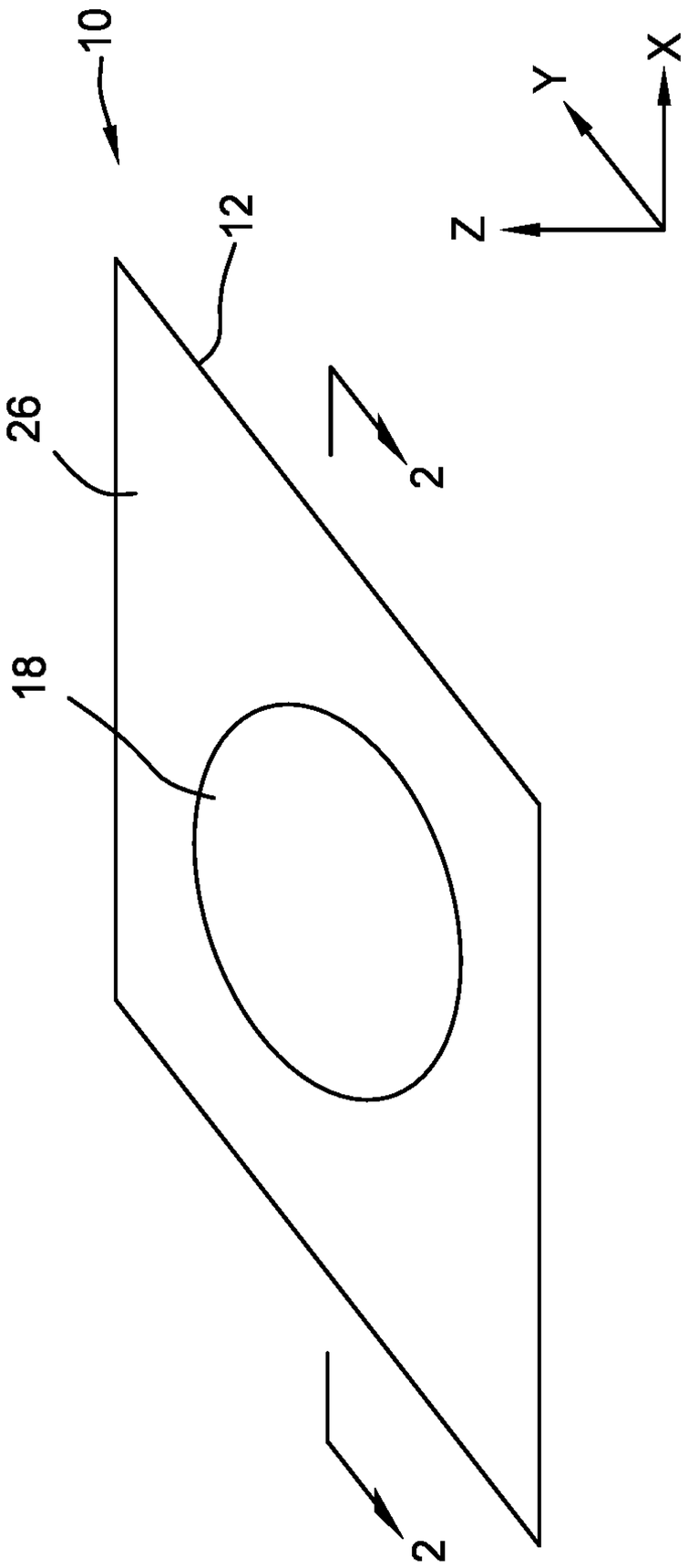

FIG. 1

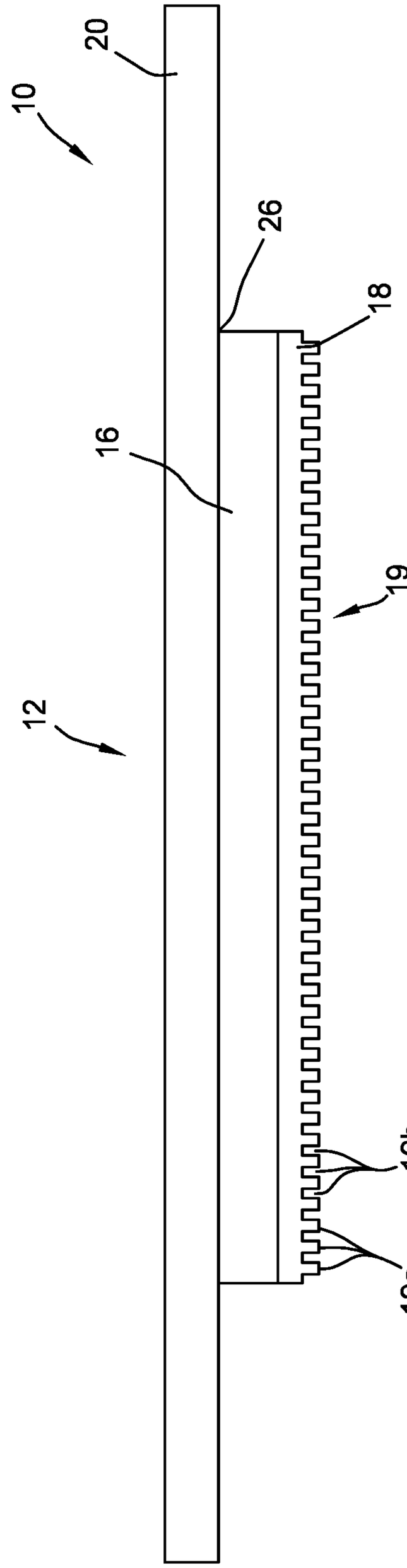

FIG. 2

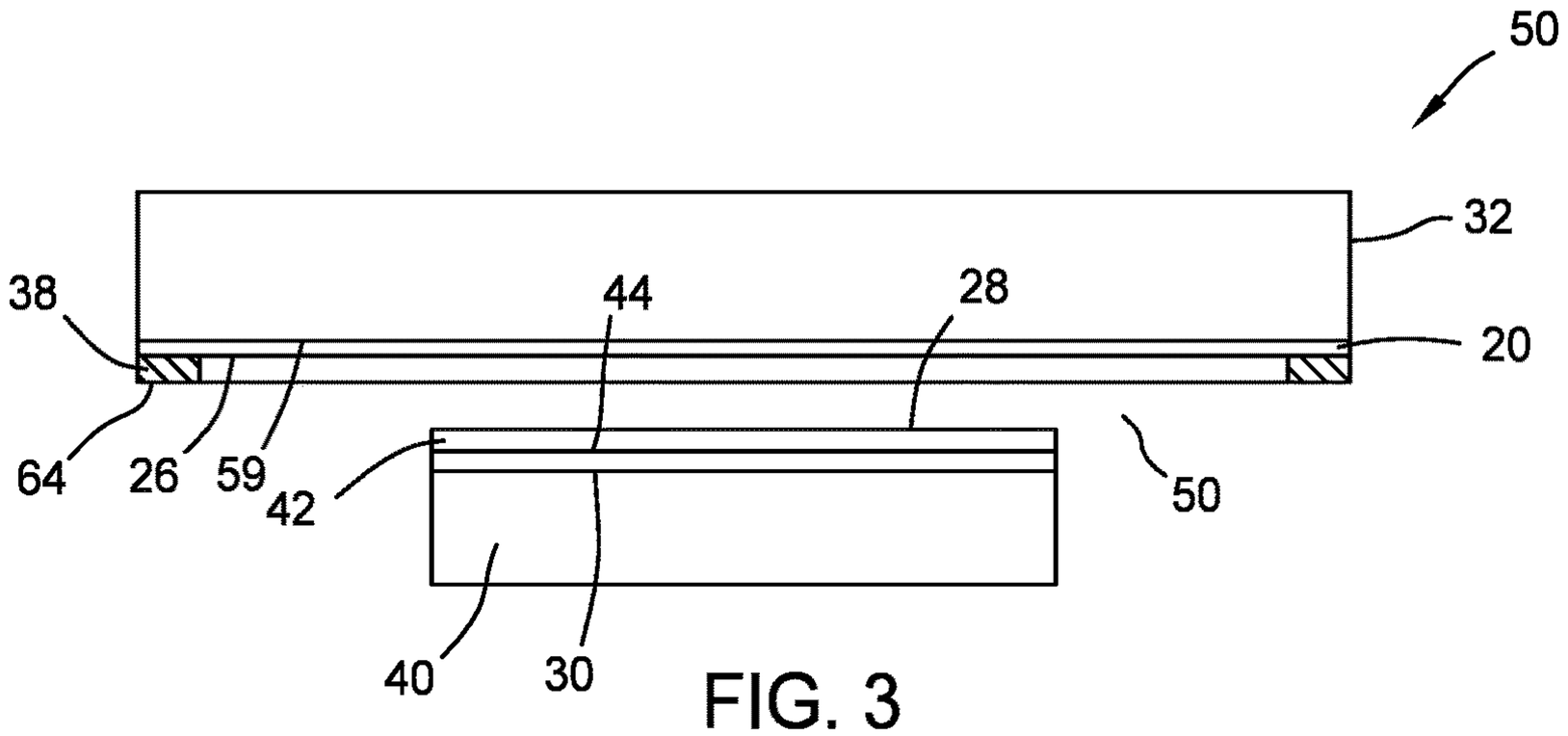

FIG. 3

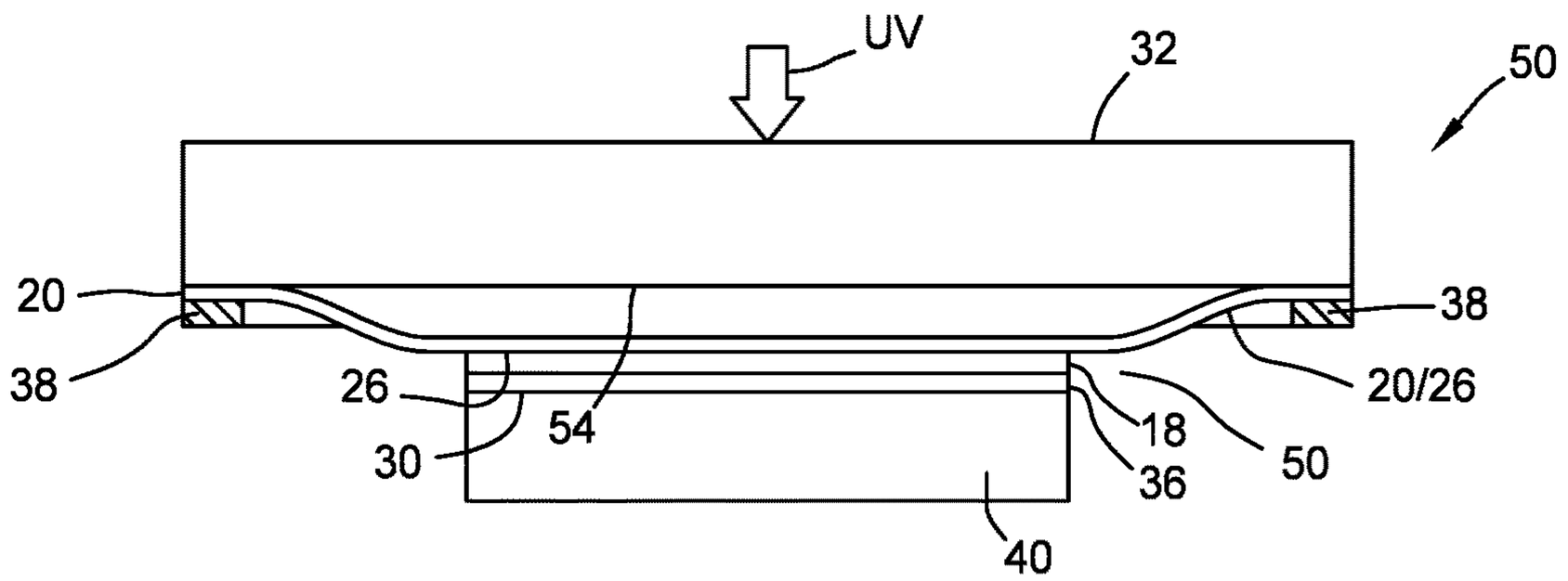

FIG. 4

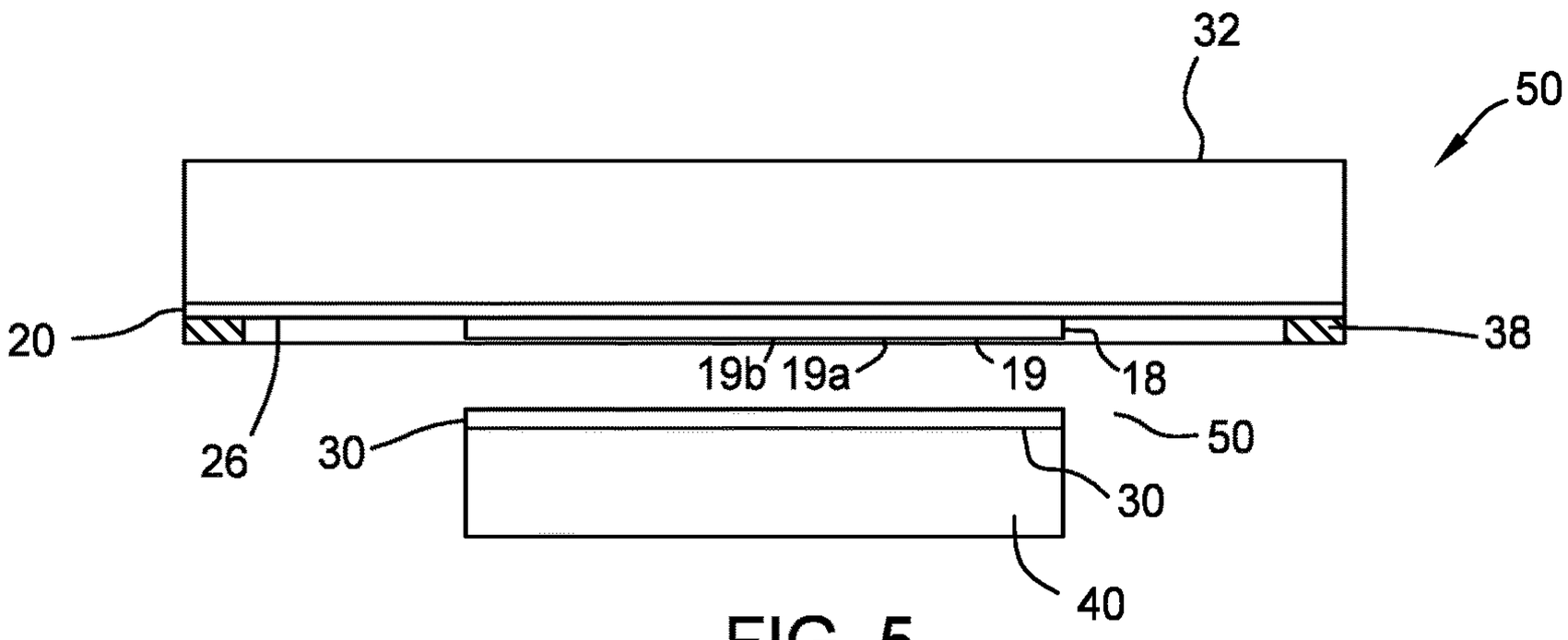

FIG. 5

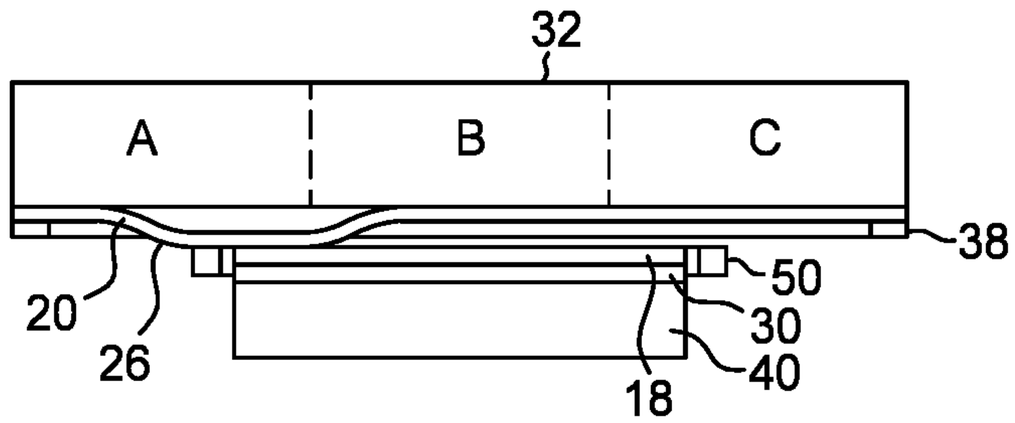

FIG. 4A

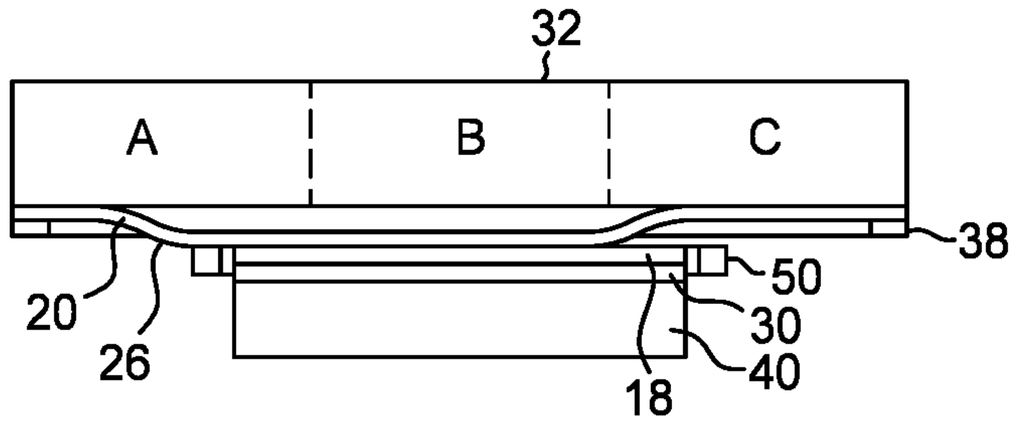

FIG. 4B

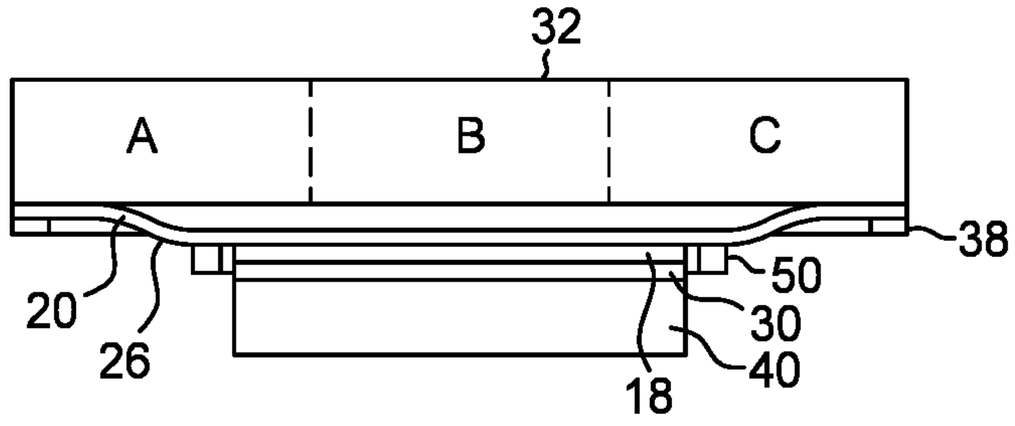

FIG. 4C

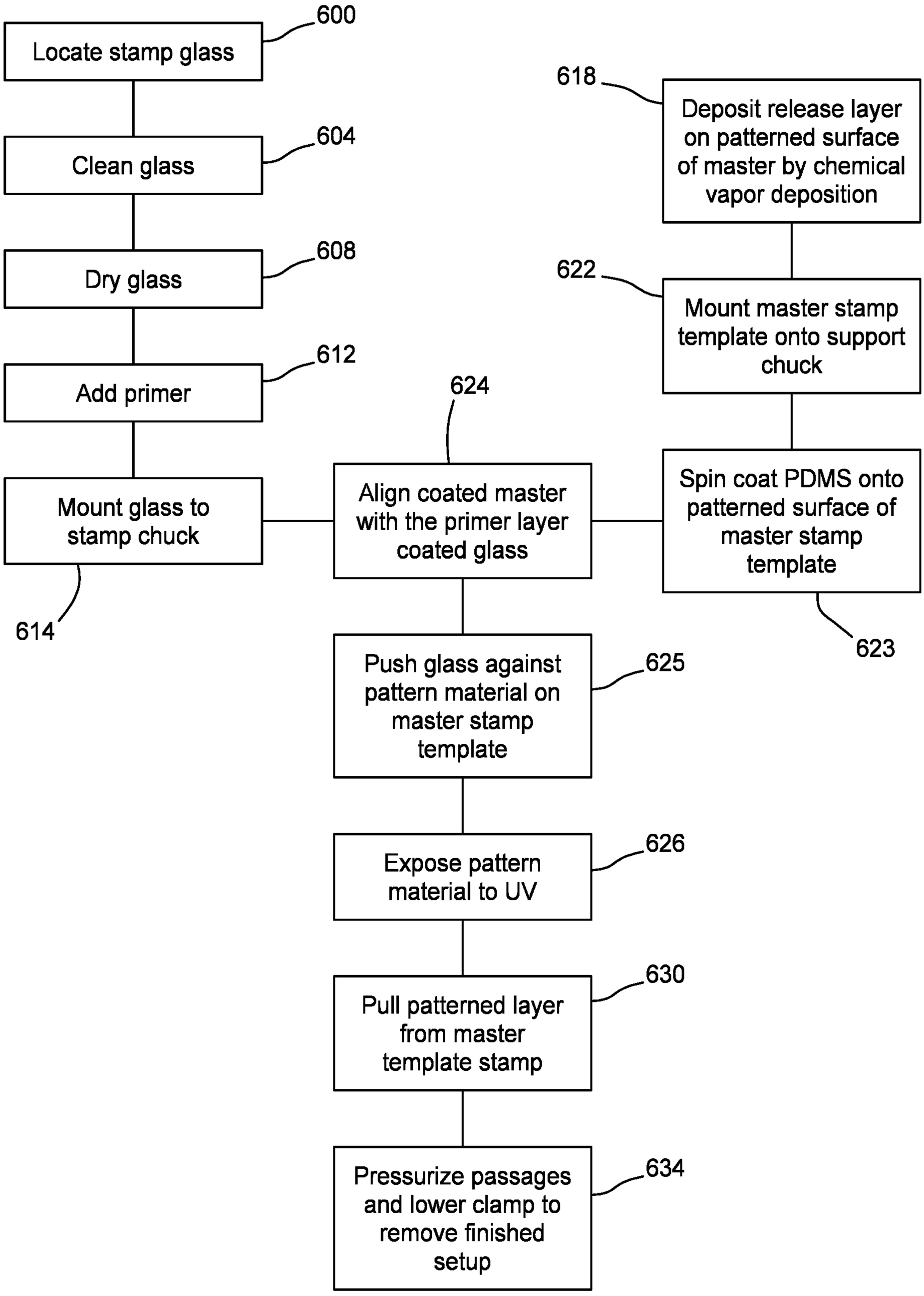
600
Locate stamp glass
604
Clean glass
608
Dry glass
612
Add primer
614
Mount glass to stamp chuck
618
Deposit release layer on patterned surface of master by chemical vapor deposition
622
Mount master stamp template onto support chuck
623
Spin coat PDMS onto patterned surface of master stamp template
624
Align coated master with the primer layer coated glass
625
Push glass against pattern material on master stamp template
626
Expose pattern material to UV
630
Pull patterned layer from master template stamp
634
Pressurize passages and lower clamp to remove finished setup

FIG. 6

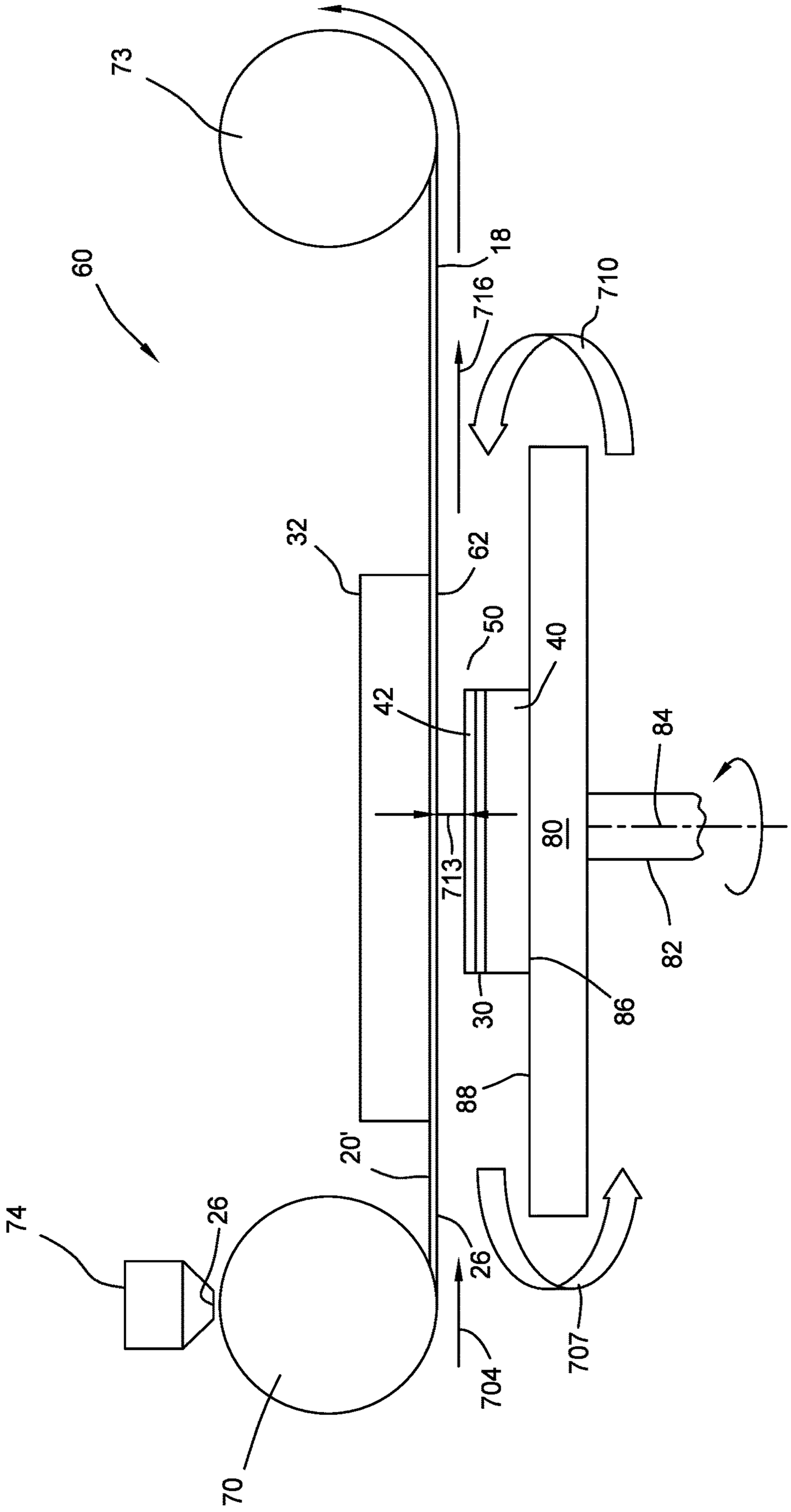
73
60
18
716
710
32
62
50
40
42
84
80
713
82
30
86
88
20'
74
26
26
704
707
70

FIG. 7

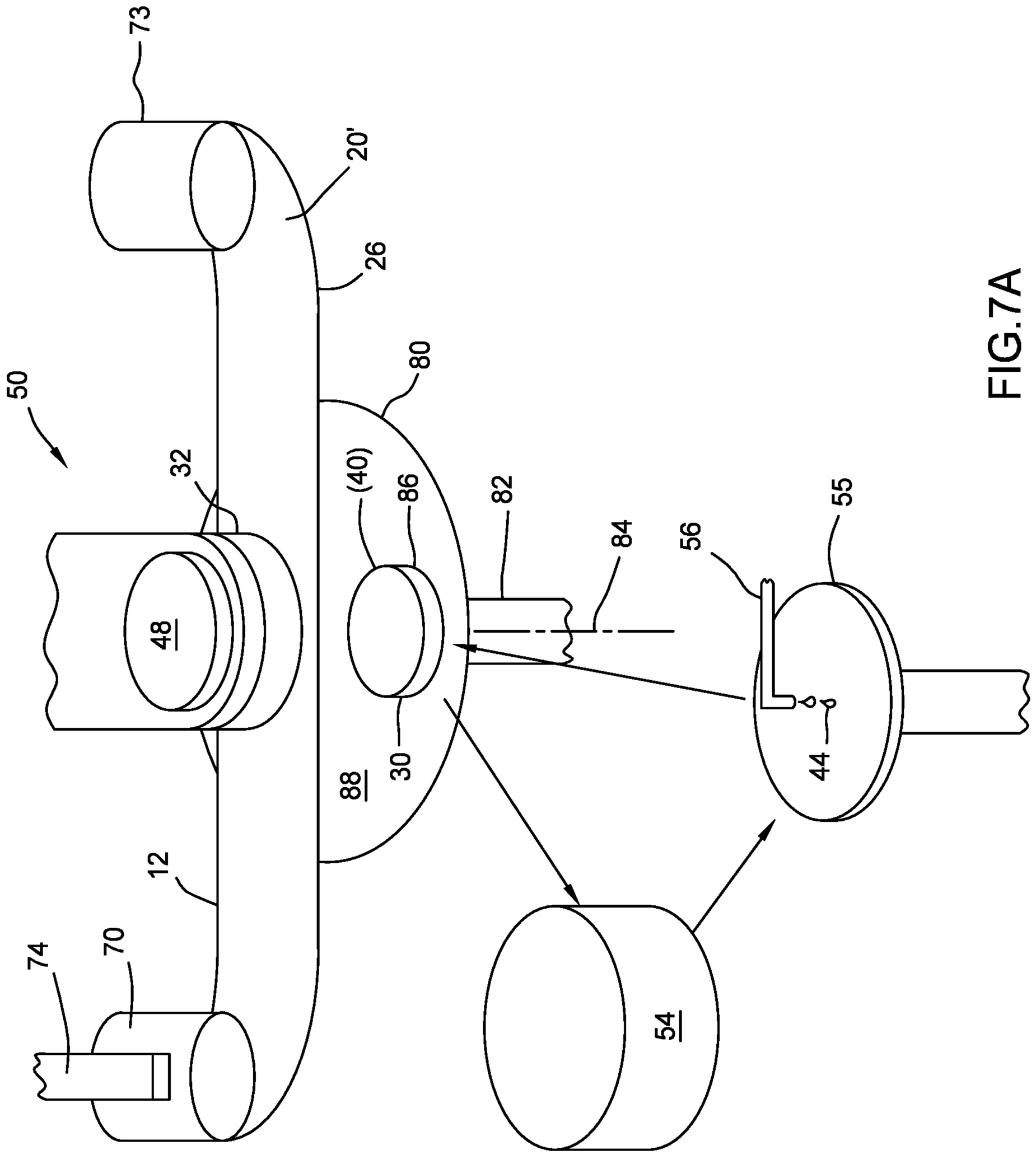

FIG.7A

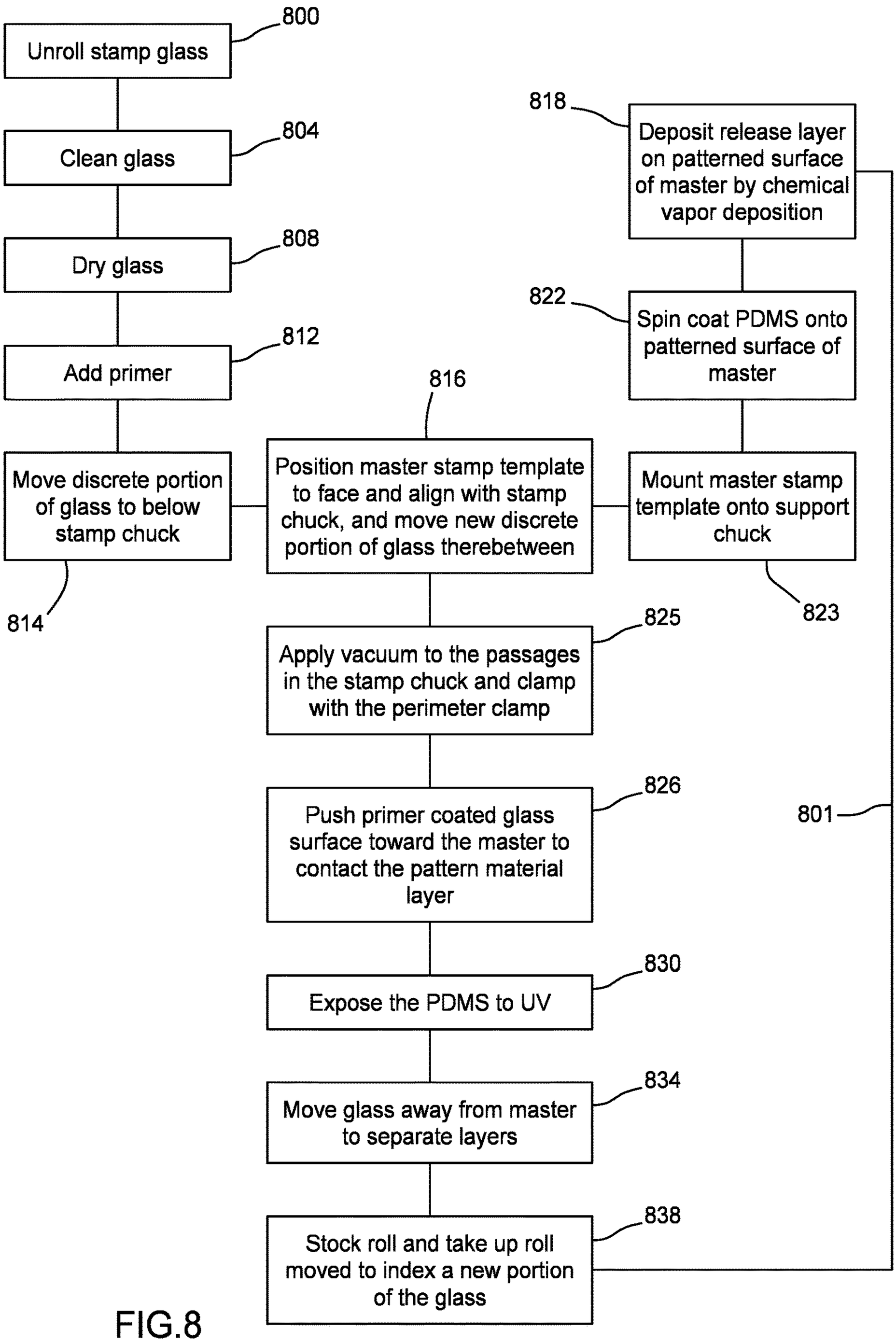
800
Unroll stamp glass
804
Clean glass
808
Dry glass
812
Add primer
814
Move discrete portion of glass to below stamp chuck
816
Position master stamp template to face and align with stamp chuck, and move new discrete portion of glass therebetween
818
Deposit release layer on patterned surface of master by chemical vapor deposition
822
Spin coat PDMS onto patterned surface of master
823
Mount master stamp template onto support chuck
825
Apply vacuum to the passages in the stamp chuck and clamp with the perimeter clamp
826
Push primer coated glass surface toward the master to contact the pattern material layer
830
Expose the PDMS to UV
834
Move glass away from master to separate layers
838
Stock roll and take up roll moved to index a new portion of the glass
801

FIG.8

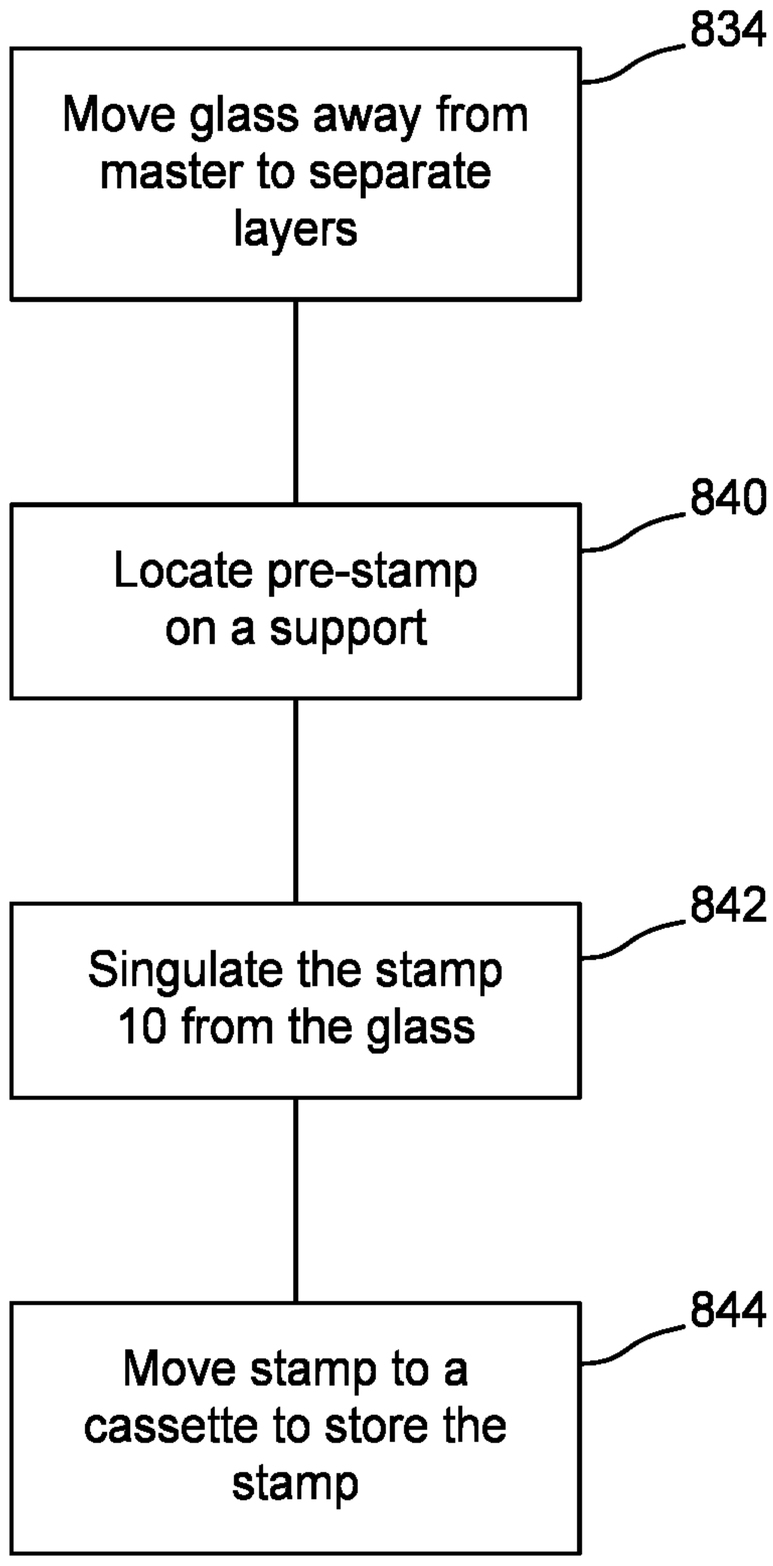
834
Move glass away from master to separate layers
840
Locate pre-stamp on a support
842
Singulate the stamp 10 from the glass
844
Move stamp to a cassette to store the stamp

FIG.8A

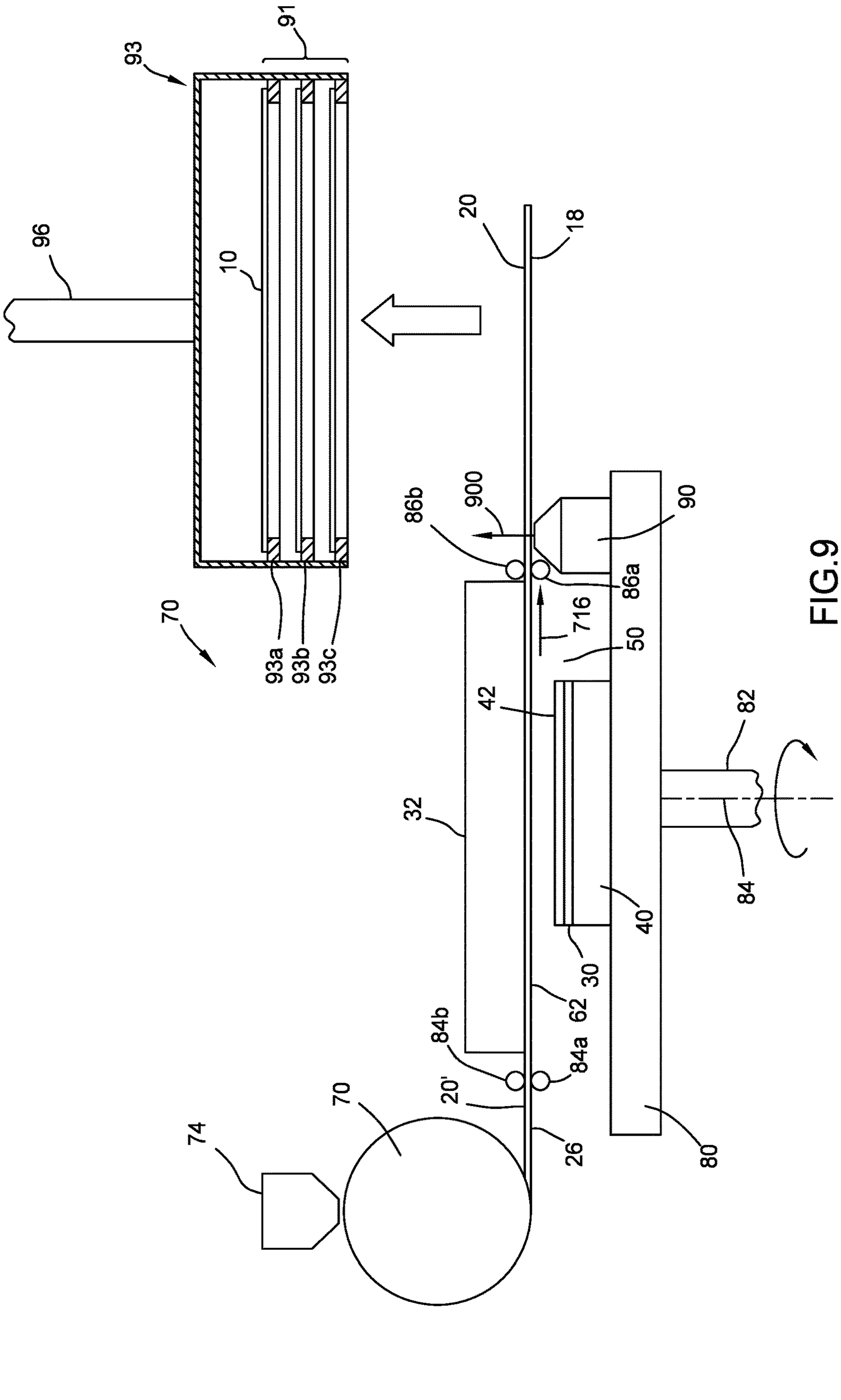
91
93
96
10
20
18
70
93a
93b
93c
86b
900
90
86a
716
50
42
82
32
84
40
30
62
84b
84a
20'
74
26
80

FIG.9

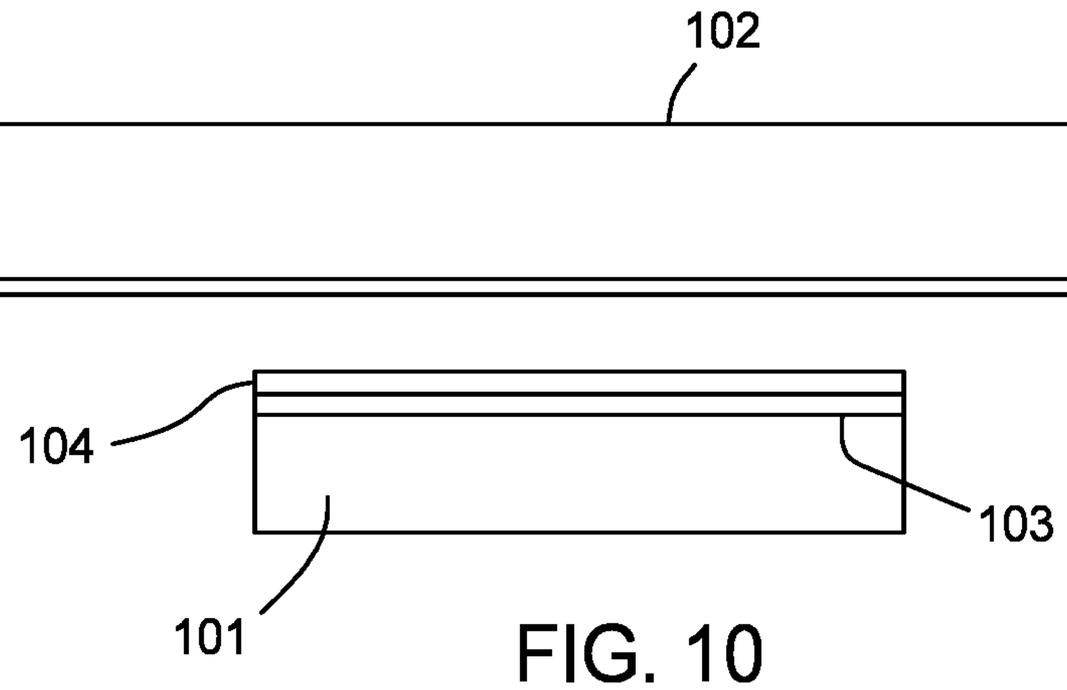

FIG. 10

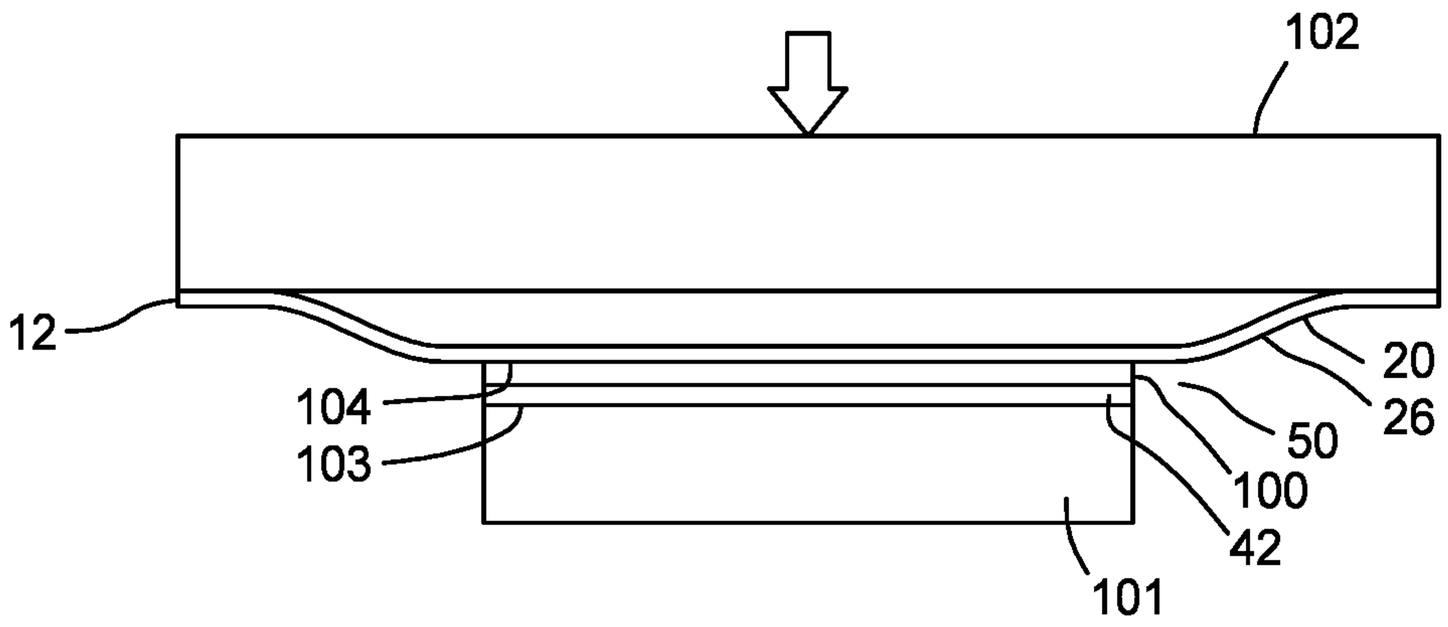

FIG. 11

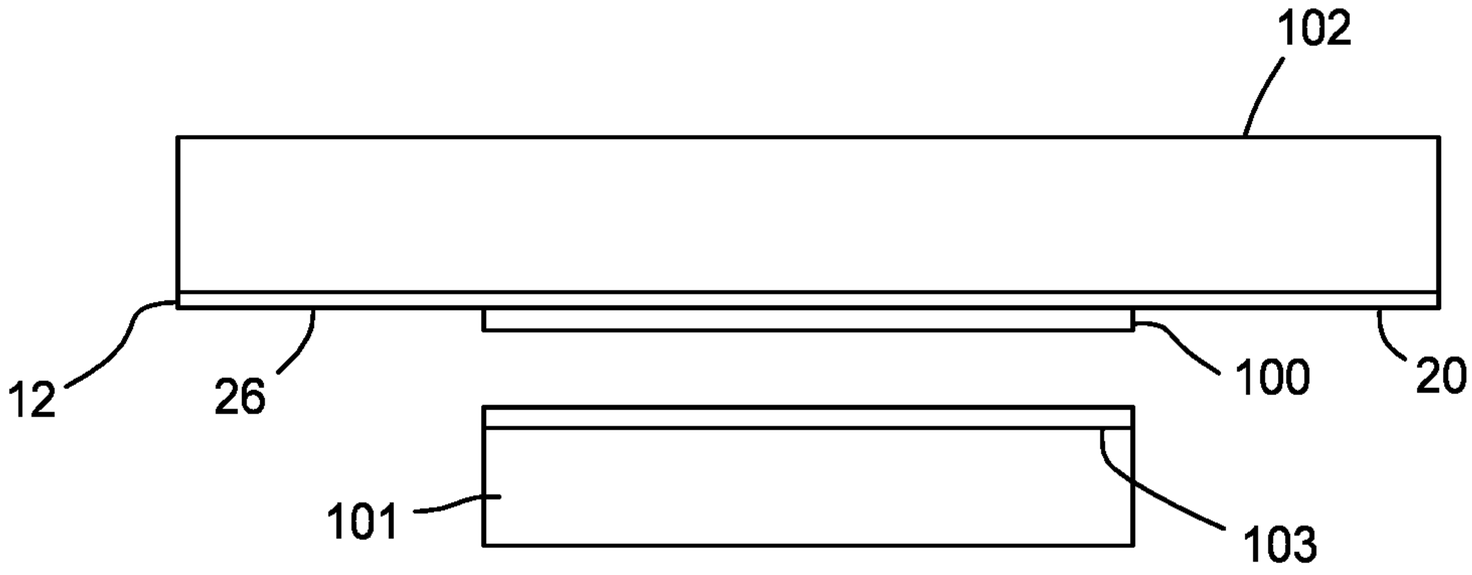

FIG. 12

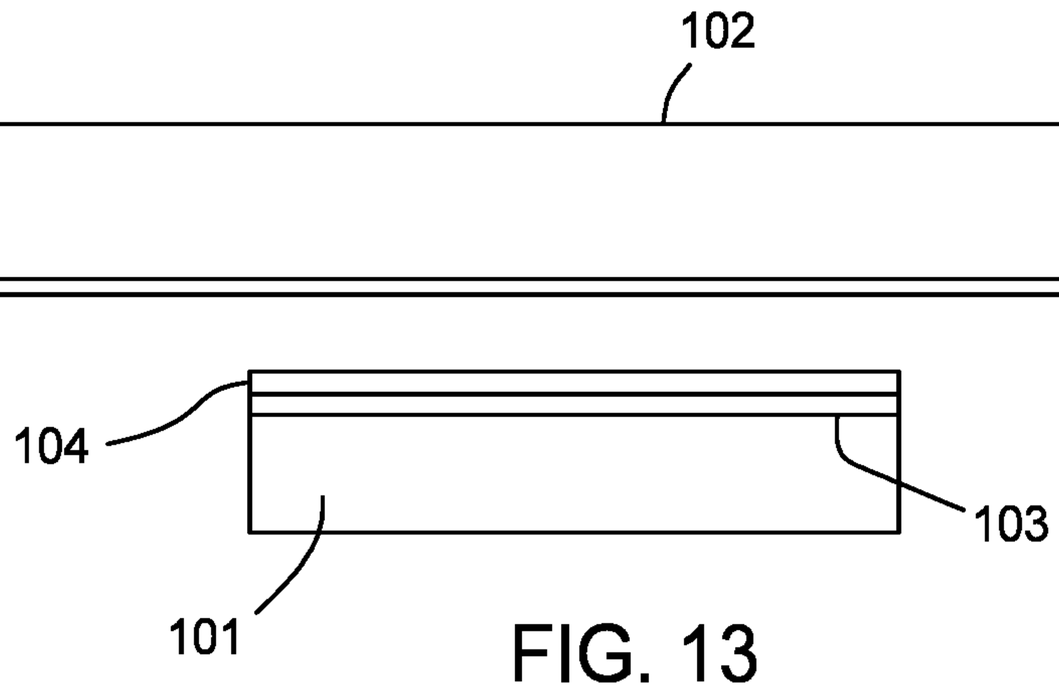

FIG. 13

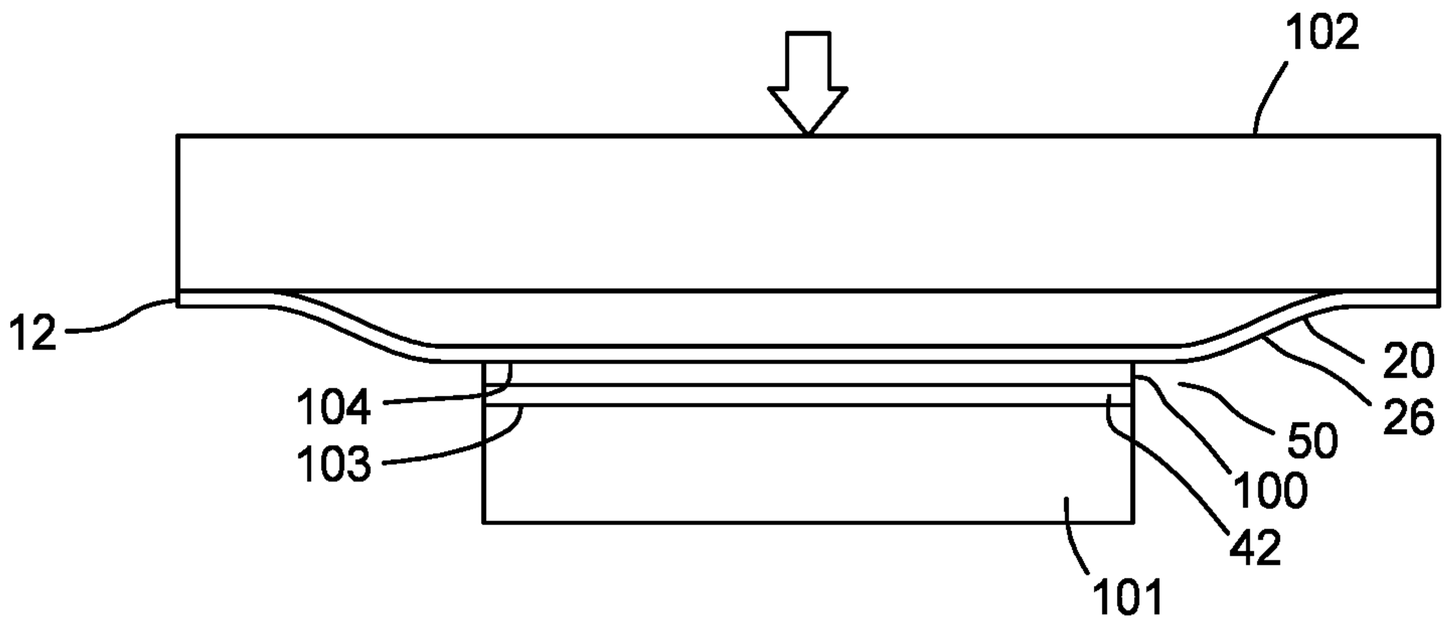

FIG. 14

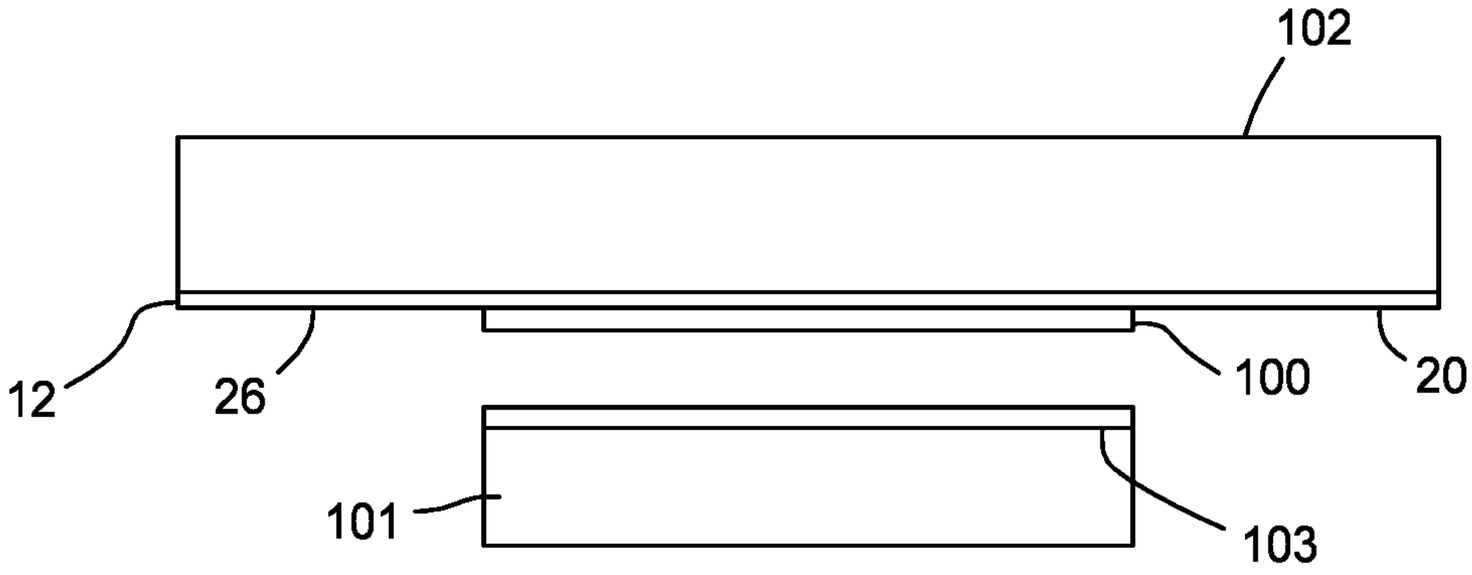

FIG. 15

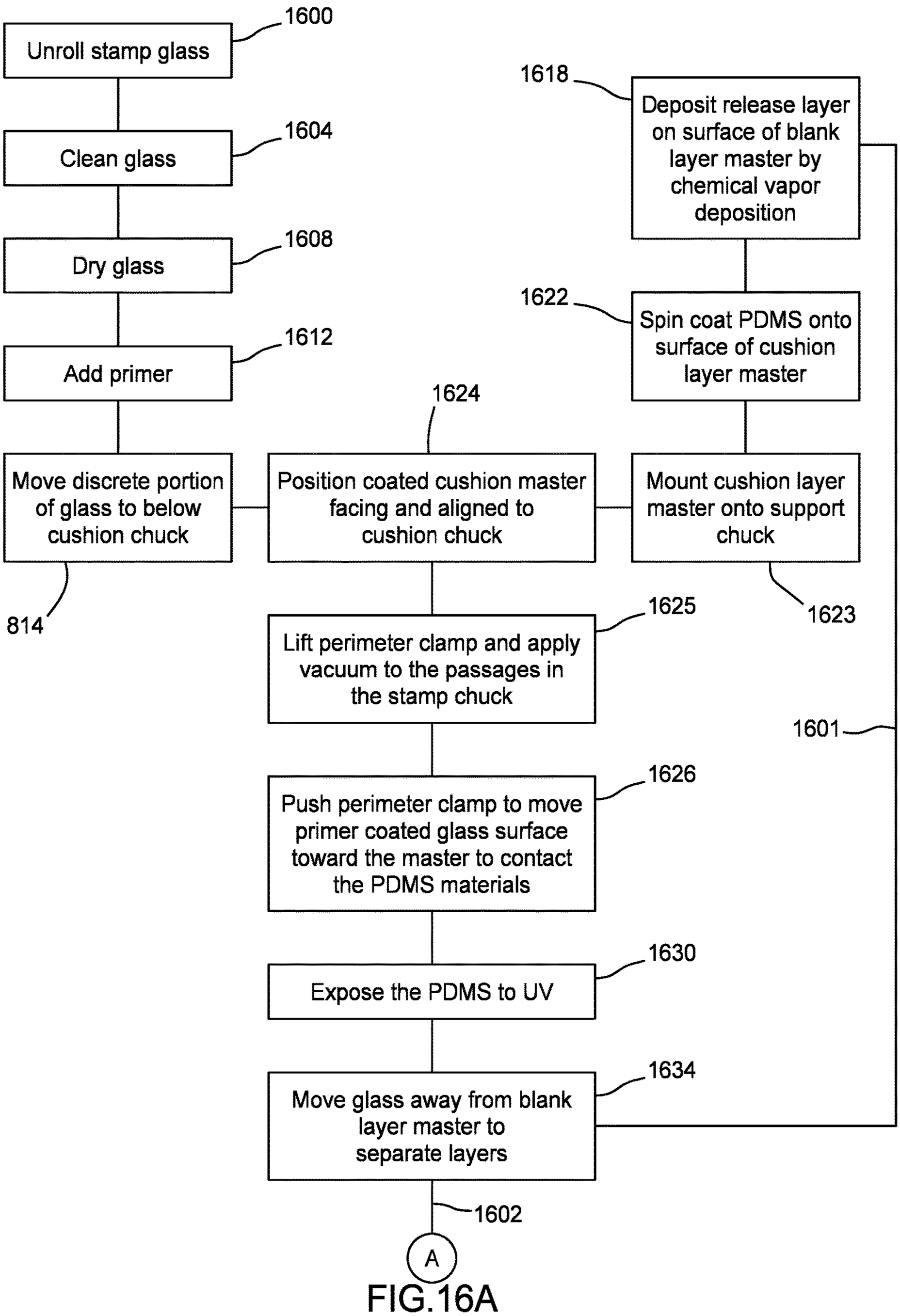
1600
Unroll stamp glass
1604
Clean glass
1608
Dry glass
1612
Add primer
1618
Deposit release layer on surface of blank layer master by chemical vapor deposition
1622
Spin coat PDMS onto surface of cushion layer master
1624
Move discrete portion of glass to below cushion chuck
Position coated cushion master facing and aligned to cushion chuck
Mount cushion layer master onto support chuck
814
1623
1625
Lift perimeter clamp and apply vacuum to the passages in the stamp chuck
1601
1626
Push perimeter clamp to move primer coated glass surface toward the master to contact the PDMS materials
1630
Expose the PDMS to UV
1634
Move glass away from blank layer master to separate layers
1602
A

FIG.16A

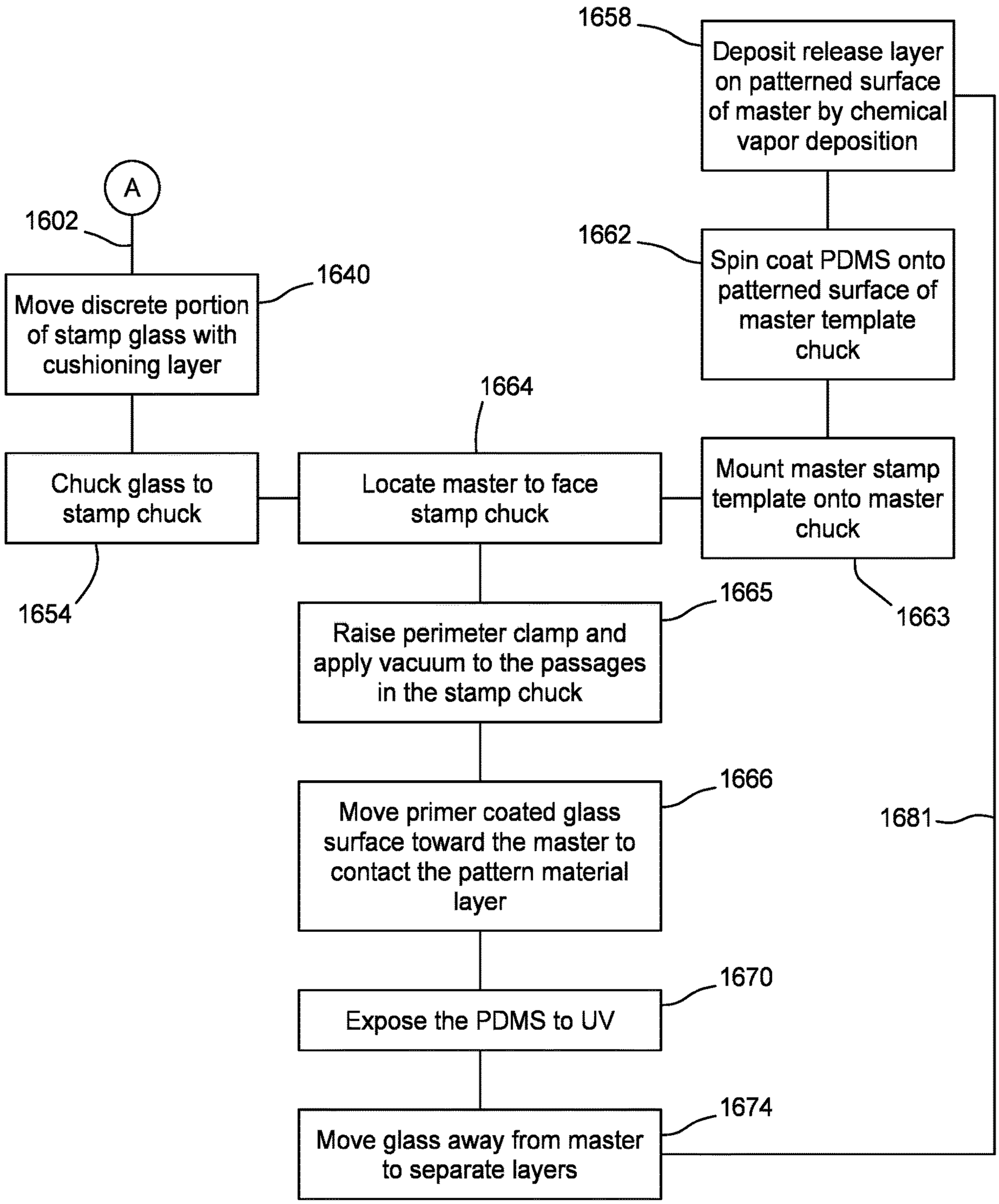
A
1602
Move discrete portion of stamp glass with cushioning layer
1640
Chuck glass to stamp chuck
1654
Locate master to face stamp chuck
1664
Raise perimeter clamp and apply vacuum to the passages in the stamp chuck
1665
Move primer coated glass surface toward the master to contact the pattern material layer
1666
Expose the PDMS to UV
1670
Move glass away from master to separate layers
1674
Mount master stamp template onto master chuck
1663
Spin coat PDMS onto patterned surface of master template chuck
1662
Deposit release layer on patterned surface of master by chemical vapor deposition
1658
1681

FIG.16B

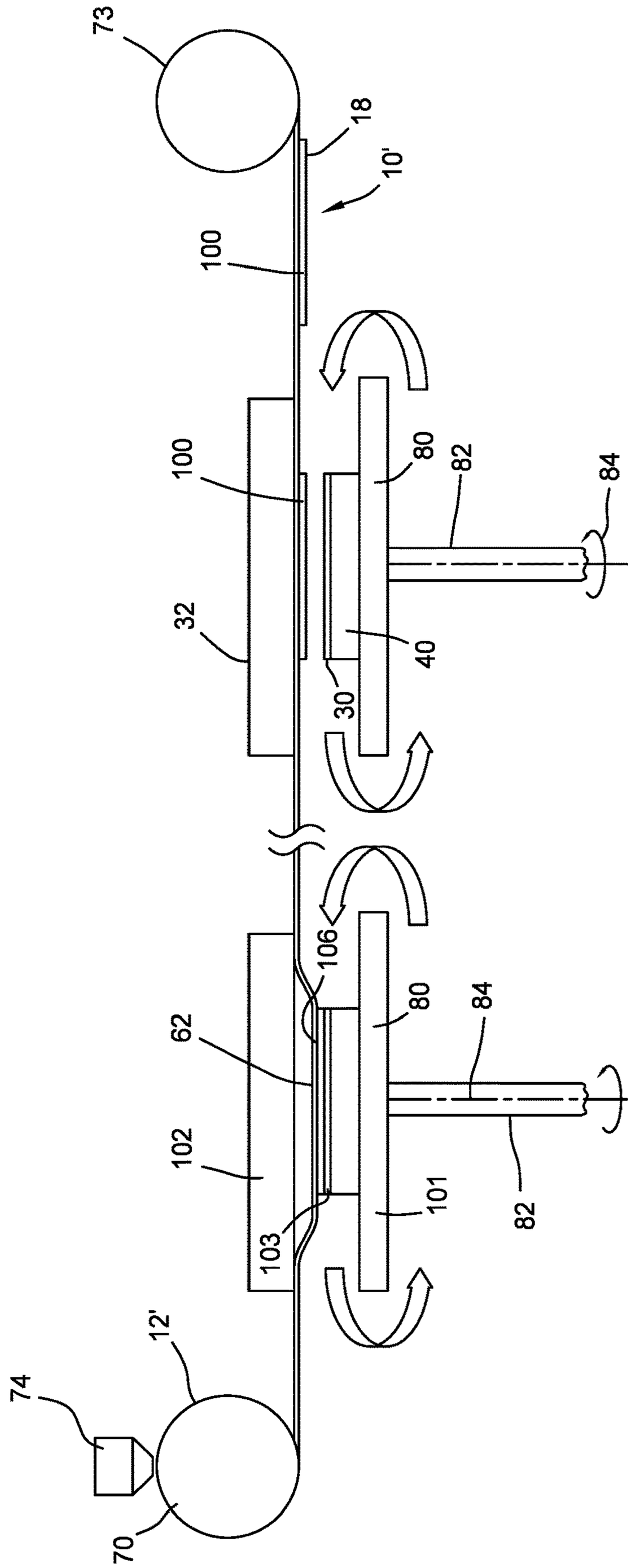
73
18
10'
100
100
32
80
82
84
40
30
106
80
84
62
102
103
101
82
12'
74
70

FIG.17

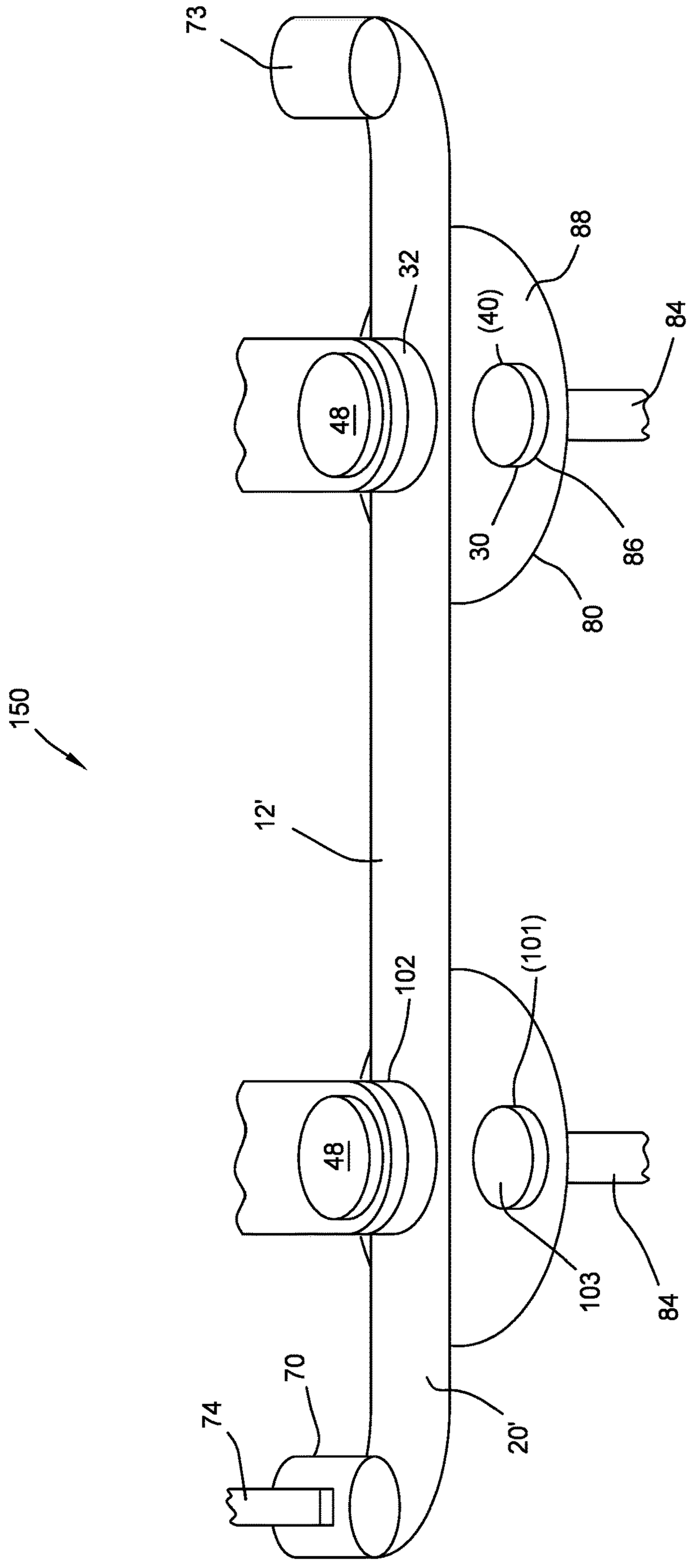

FIG.18

NANO IMPRINT STAMPS

CROSS-REFERENCE TO RELATED APPLICATIONS

[0001] This application claims priority to U.S. Provisional Patent Application No. 63/059,809, filed Jul. 31, 2020, which is incorporated herein by reference in its entirety.

BACKGROUND

Field

[0002] The present disclosure relates to nano imprint lithography, more particularly to stamps used in nano imprint lithography and the manufacture thereof using a master template stamp. The patterned layer of the stamp corresponds to a pattern of a plurality of sub-micron optical device structures to be formed in a nanoimprint lithography (NIL) process.

Description of the Related Art

[0003] Stamps used for nano imprint lithography are commonly manufactured by providing a backing material, such as glass, and depositing thereon a material which will form the patterned layer of the stamp. Then, a master template stamp is manually applied to the coated backing material, which can result in air pockets and other issues. Therefore, there is a need in the art for a more robust and repeatable methodology for the manufacture of nano imprint lithography stamps from a master template stamp.

SUMMARY

[0004] Provided herein are apparatuses and methods for manufacturing nano imprint lithography stamps from master template stamps.

[0005] In one aspect, an apparatus for manufacturing a nano-imprint lithography stamp from a master template stamp, including a stamp chuck configured to selectively secure a stamp backing material thereto, a master chuck configured to support a master template stamp, the master template stamp including a master pattern thereon, the master chuck configured to support the master template stamp in facing relationship to the stamp backing material when selectively secured to the stamp chuck, wherein the master template stamp includes an electromagnetic energy curable material on and in the master pattern, and the stamp chuck is configured and arranged to position a portion of the backing material thereon spaced therefrom and in contact with the electromagnetic energy curable material, and the stamp chuck is further configured to position the portion of the backing material in contact with the energy curable material, after it is cured, in contact with the stamp chuck.

[0006] In another aspect, there is provided a method of manufacturing a nano-imprint lithography stamp from a master template stamp, including selectively securing a stamp backing material to a stamp chuck, positioning a master template stamp on a master chuck, the master template stamp including a master pattern thereon, the master chuck configured to support the master template stamp in facing relationship to the stamp backing material when it is selectively secured to the stamp chuck, including an electromagnetic energy curable material on and in the master pattern, positioning a portion of the backing material supported by the stamp chuck the portion spaced therefrom and in contact with the electromagnetic energy curable material and exposing the electromagnetic curable material to electromagnetic energy an curing the curable material to form a solid thereof, and positioning the portion of the backing material in contact with the energy curable material, after it is cured, in contact with the stamp chuck.

[0007] In another aspect, there is provided an apparatus for manufacturing a nano-imprint lithography stamp from a master template stamp, including a first stamp chuck configured to selectively secure a stamp backing material thereto, a first master chuck configured to support a cushion master, the cushion master including a blank pattern thereon, the first master chuck configured to support cushion master in facing relationship to the stamp backing material when selectively secured to the first stamp chuck, wherein the cushion master includes an electromagnetic energy curable material on and in the master blank pattern, and the first stamp chuck is configured and arranged to position a portion of the backing material thereon spaced therefrom and in contact with the electromagnetic energy curable material, and the first stamp chuck is further configured to position the portion of the backing material in contact with the energy curable material, after it is cured, in contact with the first stamp chuck, a second stamp chuck configured to selectively secure a stamp backing material thereto, a second master chuck configured to support a master template stamp, the master template stamp including a master pattern thereon, the second master chuck configured to support the master template stamp in facing relationship to the stamp backing material when selectively secured to the second stamp chuck, wherein the master template stamp includes an electromagnetic energy curable material on and in the master pattern, and the second stamp chuck is configured and arranged to position a portion of the backing material thereon spaced therefrom and in contact with the electromagnetic energy curable material, and the second stamp chuck is further configured to position the portion of the backing material in contact with the energy curable material, after it is cured, in contact with the second stamp chuck.

BRIEF DESCRIPTION OF THE DRAWINGS

[0008] FIG. **1** is an isometric view of a nano imprint lithography stamp according to an embodiment.

[0009] FIG. **2** is a sectional view of the nano imprint lithography stamp of FIG. **1** at **2-2** according to an embodiment.

[0010] FIG. **3** is a side view of an apparatus for manufacturing a nano imprint lithography stamp from a master template stamp according to an embodiment.

[0011] FIG. **4** is a side view of an apparatus for manufacturing a nano imprint lithography stamp from a master template stamp using electromagnetic radiation according to an embodiment.

[0012] FIG. **4**A is a side view of an apparatus for manufacturing a nano imprint lithography stamp from a master template stamp as the backing material begins to be released to contacts the stamp material according to an embodiment.

[0013] FIG. **4**B is a side view of an apparatus for manufacturing a nano imprint lithography stamp from a master template stamp as the backing material is in the process of being released according to an embodiment.

[0014] FIG. **4**C is a side view of an apparatus for manufacturing a nano imprint lithography stamp from a master template stamp as the backing material has been fully released.

[0015] FIG. **5** is a side view of an apparatus for manufacturing a nano imprint lithography stamp from a master template stamp after the stamp pattern has been formed

[0016] FIG. **6** is a flowchart showing a method for manufacturing a nano imprint lithography stamp from a master template stamp.

[0017] FIG. **7** is a side view of an apparatus for automating the manufacturing of a nano imprint lithography stamp from a master template stamp.

[0018] FIG. **7**A is an isometric view of the apparatus for automating the manufacturing of a nano imprint lithography stamp from a master template stamp.

[0019] FIG. **8** is a flowchart showing a method for automating the manufacture of a nano imprint lithography stamp from a master template stamp.

[0020] FIG. **8**A is a flowchart showing the steps for singulating a stamp from a roll of stamp glass after the method of FIG. **8** is completed.

[0021] FIG. **9** is a side view of an apparatus for automating the singulation of a nano imprint lithography stamp.

[0022] FIG. **10** is a side view of an apparatus for manufacturing a cushion for a nano imprint lithography stamp from a master template stamp.

[0023] FIG. **11** is a side view of an apparatus for manufacturing a cushion for a nano imprint lithography stamp from a master template stamp using electromagnetic radiation.

[0024] FIG. **12** is a side view of an apparatus for manufacturing a cushion for a nano imprint lithography stamp from a master template stamp after the cushion has been formed

[0025] FIG. **13** is a side view of an apparatus for manufacturing a cushioned nano imprint lithography stamp from a master template stamp.

[0026] FIG. **14** is a side view of an apparatus for manufacturing a cushioned nano imprint lithography stamp from a master template stamp using electromagnetic radiation.

[0027] FIG. **15** is a side view of an apparatus for manufacturing a cushioned nano imprint lithography stamp from a master template stamp after the cushioned stamp has been formed

[0028] FIGS. **16**A and **16**B are a flowchart showing a method for automating the manufacture of a cushioned nano imprint lithography stamp from a master template stamp.

[0029] FIG. **17** is a side view of an apparatus for automating the manufacture of a cushioned nano imprint lithography stamp from a master template stamp.

[0030] FIG. **18** is an isometric view of the apparatus for automating the manufacture of a cushioned nano imprint lithography stamp from a master template stamp.

DETAILED DESCRIPTION

[0031] Referring initially to FIGS. **1** and **2**, a stamp **10**, useful for nano-imprint lithography, is shown, wherein the stamp **10** includes a backing material **12** provided for purposes of safe handling and protection of a patterned layer **18** thereon, and for mounting the backing material **12**, with the patterned layer **18** thereon, to a process tool (not shown), to allow moving the patterned layer **18** into contact with a liquid or otherwise conformable material into which an impression of the pattern in the patterned layer **18** is to be made. Thus, the stamp **10** is used to imprint a reverse image of the patterned layer **18** into another material, for example by impressing the patterned layer **18** of the stamp **10** inwardly of a heat curable liquid, and cure the liquid with the patterned layer **18** of the stamp **10** extending inwardly thereof, to form the reverse pattern to that of the patterned layer **18** in the cured curable material. The patterned layer **18** of the stamp **10** corresponds to a pattern of a plurality of sub-micron optical device structures to be formed in a NIL process.

[0032] Here, the stamp **10**, including the backing material **12** configured as a support substrate for the patterned layer **18**, itself positioned on a front side of the backing material, are shown. Here, the backing material **12** is a thin glass sheet **20**, on the order of 200 microns in thickness, but may be other materials having a suitable coefficient of thermal expansion close to matching that of an underlying substrate supporting a material layer, such as a curable liquid, into which the pattern of the patterned layer **18** is to be imprinted. The patterned layer **18** here comprises a cured Polydimethylsiloxane (PDMS) layer composed of a surface physically or chemically adhered to the backing material **12** on one side thereof and a pattern **19** of the patterned layer **18** embossed or imprinted in the opposite side thereof. The pattern **19** includes projections **19***a* and depressions **19***b* arrayed in a layout desired by the stamp **10** user.

[0033] In the cross section of the stamp **10** as shown in FIG. **2**, the backing material **12**, i.e., here glass **20**, includes thereon a conformal layer **16** disposed between the patterned layer **18** and the backing material **12**, and the conformal layer **16** is connected to the backing material **12** through an adhesive layer, here a primer layer **26** which is adhered to the backing material **12** prior to the forming of the patterned layer **18**. The conformal layer **16**, which is optional, is provided to allow the patterned layer **18** to be pressed inwardly of the material, for example a curable liquid, into which the reverse image of the patterned layer **18** is to be formed, for example if a particle or other disturbance is present in or on the material the pattern of the patterned layer **18** is being transferred into, and thus desirously is softer than the patterned layer **18**. Here, where the patterned layer is PDMS, the conformal layer **16** may likewise be composed of cured PDMS having a different, softer, modulus of elasticity. However, as stated above, the presence of the conformal layer **16** in a stamp is optional.

[0034] To manufacture the stamp **10**, a master stamp template **30** (FIGS. **3** to **5**) having a pattern to be ultimately formed on a production substrate (not shown) is prepared using traditional photolithography and patterned etching techniques, to form a desired pattern therein. The pattern may be etched into the underlying master substrate, for example a semiconductor substrate such as a single crystal silicon wafer, or other substrate, including a single crystal silicon wafer with a pre-patterned layer, into which the pattern will be etched, formed thereon. This master, having the ultimate pattern to be formed in the curable material on a substrate etched thereinto or into a layer formed thereon, is used to form the reverse of that pattern as the patterned layer **18** of the stamp **10**, such that the stamp **10** is then used to form a reverse of the patterned layer **18** thereof in the curable layer of a production substrate, such the pattern of the master stamp template **30** is replicated in the cured material layer of the production substrate.

[0035] FIGS. **3** to **5** are schematic side views of representative equipment useful for manufacturing a stamp, including forming a patterned layer **18** having a desired pattern **19**, the obverse of a pattern on a master stamp template **30**, on a backing member **12** of a stamp **10**, such as forming a patterned layer **18** on glass **20** as the backing member **12**. In contrast to prior stamp forming operations, where the material of the patterned layer **18** is first formed on the backing material **12** such as the glass **20** and the master template **30** is pressed into the material on the glass **20** and the material on the glass **20** is cured to form the patterned layer **18**, here, the material for the patterned layer **18** is first formed on the master template **30**, and then transferred to the glass by the glass **20** being contacted with the material used to form the patterned layer **18** present on the master, and that material cured, and the backing material **12** with the patterned layer **18** remaining thereon forming the stamp **10** removed.

[0036] To perform this process of manufacture, a master template **30** having a master pattern **28** formed on one surface side thereof, is mounted to a master support chuck **40**, such as by pulling vacuum through one or more passages opening at the master template mounting surface thereof. The master pattern **28** is a reverse pattern to that to be formed on the stamp **10**, but is the pattern the stamp **10** will form in a layer on a production substrate when the stamp is used to imprint a pattern in a layer on a production substrate. Before mounting the master template to the master chuck **40**, the surfaces of the master pattern **28** thereof are coated with a fluorinated self-aligning monolayer (SAM) which serves as a release layer **42**, and with the pattern layer material **44** which here is an electromagnetic radiation, or light, curable liquid material.

[0037] The backing material **12**, here the glass **20**, is secured to a stamp chuck **32**, such that the surface thereof having a primer layer **26** previously formed thereon is facing the master template chuck **40**. With the master stamp template **30** on the master template chuck **40**, the spacing between the master pattern **28** on the master stamp template **30** and the surface of the glass **20** facing the master stamp template **30** is on the order of less than one mm. Here, it is contemplated that the master chuck **40**, the stamp chuck **32**, or both, are moveable toward and away from each other, and may be mounted into, apparatus configured to change the position and orientation of the stamp chuck **32**, master chuck **30**, or both to allow placement and removal, as well as replacement with new versions of, the glass **20** (backing material **12**) on the stamp chuck and the master stamp template **30** on the master chuck **40**, and repositioning thereof as shown in FIG. **3**.

[0038] Here, to chuck the glass **20** (backing material **12**) to the stamp chuck **32**, the stamp chuck **32** includes a plurality of fluid passages **52***a-c* (FIGS. **4**A-C) opening at the stamp glass chucking surface thereof, and a perimeter clamp **38** (Shown in section) configured to maintain the stamp glass chuck facing side of the perimeter of the glass **20** (backing material **12**) against the surface of the stamp chuck.

[0039] FIG. **4** is a side view of the stamp forming apparatus **50** as the stamp glass **20** (backing material **12**) is being contacted with the pattern layer material **44**, i.e., the material within which the pattern **19** of the patterned layer **18** of FIG. **2** is formed, here a UV curable material such as PDMS. During the stamp **10** forming operation, the stamp glass **20** (backing material **12**) is positioned with the patterned layer receiving side thereof, i.e., the side having the primer layer **26** thereon, facing and spaced from the patterned layer of the master stamp template **30** by about one mm or less as in FIG. **3**, after which the patterned layer receiving portion of the stamp glass **20** (patterned layer **12**) is actuated away from the stamp chuck **32** and into contact with the pattern material layer **44** as shown in FIG. **4**. To move the stamp glass **20** from being located against the chucking surface of the stamp chuck **32** as shown in FIG. **3**, to the position thereof in FIG. **4**, the stamp glass chuck **38** has a plurality of pressure zones created by representative fluid passages **52***a-c* in the stamp chuck **32**, here shown schematically as zones A, B and C in FIGS. **4**A to **4**C. Initially, as in FIG. **3**, vacuum pressure, i.e., fluid pressure less than that of the surrounding ambient pressure, is present in the fluid passages **52***a-c* opening into the chucking surface of the stamp chuck **32** in all zones thereof, here schematically shown as three zones A, B and C fluidly connected to representative fluid passages **52***a-c*, but a greater or smaller number of zones may be used. Then, while vacuum is maintained in the passages **52***b, c* in communication with zones B and C, a pressure on the order of a few p.s.i is applied through the passages **52***a* of zone A to the backside, i.e., the stamp chuck **32** facing side, of the glass **20** (backing material **12**), causing it to locally deform and thus causing the primer layer**26** thereon contact the pattern layer material **44** on the master template **30** as shown in FIG. **4**A. Then, while maintaining the positive pressure in zone A and the vacuum pressure in zone C, positive pressure is applied to the passages **52***b* in zone B to raise the pressure therein to that present in zone A to push the glass **20** away from the glass chucking surface of the glass chuck **32** and thus the primer layer **26** thereon into contact with the pattern layer material **44** in zone B as well, as shown in FIG. **4**B. This paradigm is repeated in zone C, as shown in FIG. **4**C, to bring the primer layer **26** on the glass **20** in all three of zones A, B and C into contact with the full expanse of the pattern layer material **44** on the master stamp template **30** with the same pressure applied in all of zones A, B and C.

[0040] A support ring **50** surrounds the master chuck **40** to limit the distance the glass **20** (backing material **12**) can move in the direction of the master template **30**, and to ensure relative parallelism between the master template facing surfaces of the glass **20** (backing material **12**) when the perimeter of the glass **20** (backing material **12**) radially outside of the pattern forming region, i.e., outside of the region where the patterned layer **18** is to be formed, comes into full contact with the ring **50** about the perimeter of the pattern forming region, with a reference plane of the master pattern **36**. With the glass **20** (backing material **12**) in this position and the primer layer **26** contacting the pattern material layer **44** throughout the pattern forming region of the glass **20** (backing material **12**), UV electromagnetic energy as represented by arrow UV in FIG. **4**, such as from an array of UV LED's **48** located behind (above in FIG. **4**) the glass chuck **32**, passes through the glass chuck **32** and the glass **20** (backing material **12**) and primer layer **26** and is absorbed, at least in part, in the pattern layer material **44**. Where the pattern layer material **44** is PDMS, it can be cured into a solid form. The patterned layer **18** with the pattern **19**, the reverse of the master pattern **36** in the master stamp template **30**, is now present in the cured PDMS.

[0041] To remove the glass **20**, with the patterned layer **18** adhered thereto, the reverse of the sequence of FIGS. **4**A to **4**C is performed, such that the pressure in the fluid passages

52*c* in zone C is reduced to a sub ambient pressure while the pressure in zones A and B are maintained at above ambient pressure, the pressure in zone B is reduced to below atmospheric while zone C is maintained at a sub-ambient level, and then the passages **52***a* in Zone A are brought to the sub-ambient pressure of zones B and C. As a result, the patterned layer **12** secured to the glass **20** (backing material **12**) via the primer layer **26** is peeled away from the master template **30**, and as the primer **26** has an adhesive property, the cured PDMS forming the patterned layer **18** remains attached to the glass, as shown in FIG. **5**, yielding a finished or manufactured stamp **10** having the reverse pattern of that of the master pattern of the master stamp template **30**.

[0042] FIG. **6** is a flowchart showing a series of activities for manufacturing a stamp **10** according to the sequence of processes described with respect to FIGS. **3** to **5**. Initially, the backing material **12** for a stamp **10** to be manufactured, and the preparation to configure a master stamp template **30** to form a patterned layer **18** on the backing material **12** of the stamp, are undertaken. Herein, the preparation of the glass **20** as the backing material **12** of the to be manufactured stamp **10** is described first, followed by a description of the preparation of the master stamp template **30** for manufacture of the stamp **10**. However, these activities may be performed sequentially, with either the backing material **12**, here glass **20**, or the master stamp template **30** prepared first, they may be performed in parallel.

[0043] At Act **600**, the backing material **12** of the stamp **10**, here a thin glass sheet **20** on the order of 200 microns in thickness in the Z direction of FIG. **1** and having rectangular sides larger than the diameter of the pattered region **18** of the finished stamp in the X and Y directions of FIG. **1** is selected based on user preference, but the backing material **12** may be other materials having suitable coefficient of thermal expansion and physical properties useful for functioning as a backing material of a stamp **10** and capable of having electromagnetic energy pass therethrough. The glass is provided as a sheet and is cleaned, for example with a solvent such as isopropyl alcohol (IPA) followed by rinsing with deionized water in Act **606**, and dried in Act **608**. Drying may be accomplished by any process by which the water is removed without leaving behind contaminants or spotting of the glass, for example Marangoni cleaning where the glass is lifted out of the cleaning agent into an IPA vapor environment, spin rinse drying, or other methodologies as is known in the art. A primer layer **26** is then adhered to the clean glass surface in Act **612**, on the surface side of the glass **20** where the patterned layer **18** of the stamp is to be formed. This can be accomplished by spraying the primer material onto the glass **20** (backing material **12**), spin coating it thereon, or other methodologies. In Act **614**, the glass **20** (backing material **12**) is then mounted to a pressure chuck providing the stamp chuck **32**, having fluid ports **52***a-c* opening at the backing material receiving surface **34** thereof, and the glass **20** (backing material **12**) is held thereagainst by applying vacuum to those ports **52***a-c* and also physically clamping the perimeter of the stamp glass to the stamp chuck **32** with the clamp **38**.

[0044] The master stamp template **30** is, at Act **618**, loaded into the chemical vapor deposition chamber **54**, and a SAM coating functioning as a release layer **42** to allow separation of the patterned layer **18** from the master pattern **28** is applied to the surfaces of the master pattern **28** thereof, such as by depositing a self-aligning monolayer (SAM) material thereon to form a self-aligned monolayer as the release layer **42** material. The self-aligned monolayer is preferable a fluorinated material having a significantly lower adhesion, per square centimeter of contact with the material of the patterned layer **18** of the stamp **10** to be manufactured than that patterned layer **28** has with the primer material of the primer layer **26**. Then, in Act **622**, the master stamp template **30** is mounted to a master chuck **40**. A pattern layer material **44**, in liquid form, is coated onto, and into the recesses of, the master pattern **36** of the master stamp template **30** at act **632** using a spin coater **55**. This pattern layer material **44** may be coated onto the master stamp before or after the master stamp template **30** is mounted to the master chuck **40**. For example, a UV curable liquid, for example Polydimethylsiloxane (PDMS), is spin coated on the master pattern **36** to form the pattern material **44** into which the patterned layer **18** will be formed. After spin coating of the PDMS material on the surfaces of the master pattern **36** is performed, the master stamp template **30** and the stamp glass **20** with the primer **26** thereon are located in facing alignment in Act **624** wherein the primer **26** coated surface of the stamp glass **20** faces the PDMS layer on the master stamp template **30**, and the glass **20** is vacuum chucked to the stamp chuck **32**.

[0045] Thereafter, at Act **625**, one side, in the X or Y direction of FIG. **1**, of the glass **20** (backing material **12**) is pushed away from the stamp chuck **32** by pressurizing the fluid openings **52***a* in the stamp chuck **32** in zone A thereof, followed by applying pressure to zone B while maintaining a pushing pressure in zone A, followed by pressurizing the openings in Zone C of the glass chuck while maintaining the pushing pressure in zones A and B, as shown in FIGS. **4**A to **4**C. As discussed herein, the progress of the surface of the primer coated side of the glass toward the master is limited by the spacing ring **50**. With the primer coated surface of the glass **20** (backing material **12**) in contact with the liquid PDMS of the pattern material layer **44**, UV light is applied to the liquid PDMS pattern material layer **44** through the stamp chuck **32** and the glass **20** (backing material **12**), to cure the PDMS in Act **626** into a solid material. Thereafter, in Act **634**, the glass **20** (backing material **12**) with the PDMS cured thereon and now forming the patterned layer **18**, is pulled away from the master stamp template **30**, in the re verse sequence of FIGS. **4**A to **4**C, where vacuum is sequentially applied first in zone C, then zone B and finally in Zone A in Act **630**. As the primer **26** has greater adherence to the cured PDMS of the patterned layer **18** than does the SAM layer serving as the release layer **42** on the master stamp template **30**, the PDMS, now cured and forming the patterned layer **18** of the stamp **10**, maintains adherence to the glass **20** (backing material **12**) as the glass **20** (backing material **12**) is pulled away from the master**30**. Then, pressure is applied to the passages **52***a-d* and the perimeter clamp **38** is lowered to release the finished stamp **10** from the stamp chuck **32**.

[0046] FIG. **7** is a side schematic view of an automated stamp manufacturing apparatus **60**, and FIG. **7**A is an isometric view of the apparatus **50**. In contrast to the stamp manufacturing apparatus **50** of FIGS. **3** to **5**, here, the backing material **12**, here thin stamp glass **20'** having a thickness on the order of 200 microns, is provided on a backing material supply or stock roll **70** wherein a length of glass **20'** (backing material **12'**) equal to at least several pieces of glass **20** of a finished stamp **10** in the X or Y directions of FIG. **1**, and, after a pattern layer is formed on

discrete portions **62** thereof, the length glass **20'** (backing material **12'**) moved toward and onto a take up roll **73**. Once the patterned layer **18** is formed on the strip or length of glass **20'**, a pre-stamp **10'** is formed, which can later be cut from the length of glass **20'** (backing material **12'**) to form a finished stamp **10** for use in nano imprint lithography. To manufacture the pre-stamp **10'**, a master chuck **40** for holding a master stamp template **30**, and the stamp chuck **32**, configured for chucking the length of glass **30'** directly between the stamp chuck **32** and the master chuck **30** thereto, having the fluid passages **52***a-c* and operation described herein with regard to FIGS. **3** to **5**, are provided between the stock roll **70** and take up roll **73** such that the length of glass **20'** (backing material **12'**) passes therebetween. Here, to form a pre-stamp **10'**, the stock roll **70** is rotated to unroll therefrom a discrete amount or discrete portion **62** of the strip or length of glass **20'**, the discrete portion **62** having a dimension, in the direction between the stock roll **70** and take up roll **73** slightly larger than the side dimensions of a finished stamp **10**. For example, if the glass **20** (backing material **12**) of a finished stamp of FIGS. **1** and **2** is 15 inches long on each side thereof in the X and the Y directions, a discrete portion **62** of the length of glass **20'** (backing material **12'**) greater than 15 inches is unrolled from the stock roll **70**, and taken up by the take up roll **73**, such that a new or fresh discrete portion **62** of the strip or length of glass **20'** (backing material **12'**) is positioned between the master chuck **40** and the stamp chuck **32**. Here the glass **0'** also has a dimension, in the direction perpendicular to the length thereof **2** extending from the stock roll **70**, of 15 inches. The strip or length of glass **20'** (backing material **12'**) on the stock roll **70** is preferably pre-cleaned before being rolled up to provide the stock roll **70**, and as the glass **20'** (backing material **12'**) of the stock roll **70** is unrolled, a primer application device **74** such as a sprayer bar extending across the width of the glass **20'** (backing material **12'**) (in the depth direction of FIG. **7**) applies a primer material on the clean portion of the length of glass **20'** (backing material **12'**) unwound therefrom to form the primer layer **26** as it passes thereunder. Optionally, prior to being coated with the material forming the primer layer **26**, the discrete portion **62** of the length of glass **20'** (backing material **12'**) dispensed from the stock roll **70** can be cleaned and dried as it is unwound from the stock roll **70**. Then, the primer application device **74** applies the primer material to form the primer layer **26** to the just cleaned discrete portion **62** of the length of glass **20'** (backing material **12'**) taken from the stock roll **70**. Here, the distance from where the glass **20'** (backing material **12'**) leaves the stock roll **70** to the location of the stamp chuck **32** and facing master chuck **30** is greater than the length, in the roll to roll direction of the portion of glass **20'** (backing material **12'**) used to manufacture a pre-stamp **10'**, as one portion of the glass **20'** (backing material **12'**) is cleaned and coated, or simply coated, with the primer material, to form the primer layer **26**, the previously primer material coated portion of the glass **20'** (backing material **12'**) is moved between the stamp chuck **32** and the master chuck **40**.

[0047] As with the stamp forming apparatus **50** described with respect to FIGS. **3** to **5** hereof, after each use of the master stamp template **30** to imprint a pattern to form a patterned layer **18**, the master must be washed, recoated with the release layer, and repositioned for reuse to form another patterned layer **18**. Here, that is accomplished by mechanically moving the master stamp template **30**, or the master chuck **40** with the master stamp template **30** thereon, to the side of the location of the stamp chuck **32**, such as by mounting the master stamp template **30** or the master chuck **40** on a turntable **80** and rotating the turntable **80** between a location where the stamp master stamp template **30** is positioned facing the stamp chuck **32** and a location where the stamp master stamp template **30** is spaced from the stamp chuck **32** and somewhat to the side thereof to enable removal of the stamp chuck **30** without physical or mechanical interference with the stamp chuck **32** during the removal of the stamp chuck **30** as shown in FIG. **7**A. For example, a turntable **80** having one or more master receiving stations **86** thereon or in a stamp chuck **32** receiving surface **88** thereof, can receive a master stamp template **30**, or a master chuck **40**, at each receiving station. By rotating a shaft **82** connected to the center of the turntable **80** at the center thereof, about a centerline **84** of the shaft, the master receiving stations **86** can be moved in arcs to be positioned below and facing the stamp chuck **32** and stopped thereat for the process of forming the patterned layer **18** on the discrete portion **62** of the glass **20'** (backing material **12'**) located between that master stamp template **30** and the stamp chuck, and then the turntable can be indexed in another rotational motion about the axis **84** to position and fix an additional master chuck **40** to face the stamp chuck **32**. Thus, by providing a plurality of identical master stamps **30**, as each master stamp template **30** is used to form a patterned **18** layer and moved away from the location of the stamp chuck **32**, a new master stamp template **30**, with a release layer **42** formed thereon in a chemical vapor deposition chamber **54** (shown schematically) and a layer of pattern forming material **44** applied thereover by spin coating on a spin chuck **55** with a liquid pattern layer material dispenser **56**, is indexed by the turntable **80** to be positioned facing, and properly aligned to, the facing surface of the stamp chuck **32**.

[0048] Once a master stamp template **30**, with a release layer **42** and a pattern material layer **44** thereon, is indexed by the turntable **80** to be positioned facing, and properly aligned to, the facing surface of the stamp chuck **32** and a discrete portion **62** of the primer coated glass **20'** (backing material **12'**) is moved into the stamp forming apparatus **60** with the primer layer **26** facing toward the master chuck **40**, the apparatus is ready to form a patterned layer **18** on the discrete portion **62** of the glass **20'** underlying the stamp chuck **32**. At the same time, a master stamp template **30** which was just used to form a patterned layer **18** and which was moved away from the location between the stamp chuck **32** by the turntable **80** is removed from a master chuck **40** on the turntable **80** of the stamp forming apparatus, such as manually or by an automated methodology such as with a robot. A clean, and coated with the release layer **42** and pattern forming material **44**, master stamp template **30** is then located on the open master chuck **40**. Alternatively, the just removed master stamp template **30** could be cleaned, recoated with the release layer **42**, coated with a fresh pattern material layer **44** and placed on the open master chuck **40** from which it had been removed. After the new or previous master stamp template **30**, coated with a new release layer **42** and a new pattern material layer **44** is put into the stamp forming apparatus, it may be moved to the location facing the stamp chuck **32**, a new portion of the

glass **20'** (backing material **20'**) positioned therebetween, and a new stamp is created as described herein with respect to FIGS. **3** to **6**.

[0049] In contrast to the manufacture of the stamp **10** in FIGS. **3** to **6**, here the stamp preform **10'** is formed by first applying vacuum to the passages **52***a-c* in the stamp chuck **32** to pull the discrete portion **62** of the glass **20'**(backing material **12'**) on which the patterned layer **18** is to be formed against the glass chucking surface thereof, and the perimeter clamp **38** is pushed from a location below the portion of the glass **20'** (backing material **20'**) to extend along, and press, the portion of the glass **20'** (backing material **20'**) on which the patterned layer is to be formed against the perimeter of the stamp chuck **32**. Thereafter, the manufacture of the patterned layer **18** follows a similar sequence, wherein the paradigm for positioning the primer coated surface of the glass, here glass **20'** (backing material **20'**) in contact with the pattern material layer **44** in liquid form, the curing by directing UV energy or light through the stamp chuck **32** and the glass **20'** (backing material **20'**) into the pattern material layer **44** to cure it, and the sequence of pulling the glass, here glass **20'** (backing material **20'**) away from the master **20** with the patterned material layer **18** adhered thereto are performed.

[0050] Once the portion of the glass **20'** (backing material **20'**) just having the patterned layer formed thereon is pulled from the master **20**, vacuum in the passages **52***a-c* are relieved, the perimeter clamp **38** is retracted, a slightly positive, with respect to ambient, pressure is applied to the passages **52***a-c* to ensure the glass **20'** can move with respect to the stamp chuck **32**, and the stock roll **70** and take up roll **73** moved to index a new discrete portion **62** of the glass **20'** (backing material **20'**) to the position between the stamp chuck **32** and the current, or expected, location of a master **20** facing the stamp chuck **32**, and the process repeated. The process of indexing the portion of the glass **20'** (backing material **12'**), cleaning and recoating the master stamps **30**, and positioning them to face the stamp chuck **32**, is repeated until an entire roll of glass **20'** is coated with patterned layers **18**, after which a new roll of glass **20** (backing material **12'**) can be loaded into the apparatus and the process repeated. As stamp pre-forms **10'** are formed, and the stock roll **70** and take up roll **73** moved to index a new portion of the glass **20'** (backing material **20'**) to the position between the stamp chuck **32** and the current, or expected, location of a master **20** facing the stamp chuck **32**, the stamp pre-forms **10'** will become rolled into the take up roll **73** which can be later rolled out, and individual stamps **10** formed therefrom.

[0051] FIG. **9** is a side view of another alternative automated stamp forming apparatus **70** hereof. In contrast to the stamp manufacturing apparatus **60** of FIG. **7**, here the pre-stamps **10'** are separated or singulated from the stamp glass **20'** by a stamp separation device **90** located, in a glass **20'**(backing material **20'**) feed direction downstream of the master chuck **40** and stamp chuck **32** by a distance sufficient for a singulation device to be present to sever the glass **12'** (backing material **20'**) along a line generally perpendicular to the feed direction go the glass **20'** (backing material **12'**). Once the patterned layer **18** is formed on a desired discrete portion **62** of the length of glass **20'**(backing material **20'**) dispensed from the stock roll **70** as shown and described with respect to FIG. **7**, a pre-stamp **10'** comprising the portion of glass **20'** (backing material **12'**) is formed and is still attached to the length or strip of glass **20'** (backing material **12'**) being dispensed from, the stock roll **70**, with the primer layer **26** and the patterned layer **18** thereon, which is thereafter cut from the length of glass **20'** (backing material **12'**) to form a finished stamp **10**.

[0052] To manufacture this pre-stamp **10'**, master chuck **40** for holding a stamp master stamp template **30**, and the stamp chuck **32**, configured for chucking the length of glass **30'** directly between the stamp chuck **32** and the master chuck **30** thereto, having the fluid passages and operation described herein with respect to FIGS. **3** to **5**, are provided to receive discrete portions **62** of the glass **20'** (backing material **12'**) dispensed or pulled from the stock roll **70** such that a length of glass **20'** (backing material **12'**) is disposed therebetween As no take up roll **73** is here provided, to position the glass **20'** (backing material **12'**) dispensed from the stock roller **70**, a first pair of rollers **84***a, b* is disposed, one roller on each side of the glass **20'** (backing material **12'**), adjacent to the stock roll **70** side of the master chuck **40**, and a second pair of rollers **86***a, b*, one roller of which is on either side of the glass **20'**, is located such that the master chuck **40** and stamp chuck **32** is disposed between the second pair of rollers **86***a,b* and the first pair of rollers **84***a, b*. Each of the rollers **84***a, b* and **86***a, b* of the first pair of rollers **84***a, b* and second pair of rollers **86***a,b* extend across the width direction of the glass **20'** (backing material **12'**), i.e., in the direction into the page of FIG. **9**, and at least one of the first pair of rollers **84***a, b* and one of the second pair of rollers **86***a,b* is positively rotated such as by a servo motor, to both actively position the portion of the glass **20'** (backing material **12'**) on which the patterned layer **18** is to be formed between the master chuck **40** and the stamp chuck **32**, and to maintain sufficient tension on the portion of the glass **20'** (backing material **12'**) extending therebetween to be maintained in a sufficiently close to the flat plane to prevent scraping thereof against a master stamp template **30** on the master chuck **40** or the stamp chuck **32** during glass **20'** (backing material **12'**) movement. Thus, in this version of the stamp manufacturing apparatus **70**, to form a pre-stamp **10'** the stock roll **70** is rotated to unroll therefrom a discrete portion **62** of the length or strip of glass **20'** (backing material **20'**), the discrete portion **62** having a dimension, in the direction between the stock roll **70** and the second pair of rollers **86***a, b*, which is slightly larger than the side dimensions of a finished stamp **10**. For example, if the glass **20** (backing material **12**) of a finished stamp is 15 inches long on each side thereof in the X and the Y directions of FIG. **1**, a discrete portion of the length of glass **20'** (backing material **12'**) greater than 15 inches is unrolled from the stock roll **70**, and taken up by the first and second pairs of rollers **84***a, b*, **86***a, b*. Here the glass **20'** also has a dimension, in the direction perpendicular to the length thereof extending from the stock roll **70**, of 15 inches. As a result, a new or fresh discrete portion **62** of the length of glass **20'** (backing material **12'**) is positioned between the master chuck **40** and the stamp chuck **32**. The length of glass **20'** (backing material **12'**) on the stock roll is preferably pre-cleaned before being rolled up to provide the stock roll **70**, and as the glass' (backing material **12'**) of the stock roll **70** is unrolled, a primer application device **74** such as a sprayer bar extending across the width of the glass **20'** (backing material **12'**) (in the depth direction of FIG. **9**) applies a primer material on the clean portion of the length of glass **20'** (backing material **12'**) unwound therefrom to form the primer layer **26** as it passes thereunder. Optionally, prior to

being coated with the material forming the primer layer **26**, the portion of the length of glass **20'** (backing material **12'**) can be cleaned and dried as it is unwound from the stock roll **70**. Then, the primer application device **74** applies the primer material to form the primer layer **26** to the just cleaned portion of the length of glass **20'** (backing material **12'**) taken from the stock roll **70**. Here, the distance from where the glass **20'** (backing material **12'**) leaves the stock roll **70** to the location of the stamp chuck **32** and facing master chuck **30** is greater than the length, in the roll to roll direction of the portion of glass **20'** (backing material **12'**) used to manufacture a pre-stamp **10'**, as one portion of the glass **20'** (backing material **12'**) is cleaned and coated, or simply coated, with the primer material, the previously primer material coated portion of the glass **20'** (backing material **12'**) is moved between the stamp chuck **32** and the master chuck **40** by the unwinding of the stock roll **70** and first and second pairs of rollers **84***a, b*, **86***a, b*.

[0053] As with the device described with respect to FIGS. **3** to **5** hereof, after each use of the master stamp template **30** to imprint a pattern to form a patterned layer **18**, the master must be washed, recoated with the release layer, and repositioned for reuse to form another patterned layer **18**. Here, this is accomplished by using the same methodologies as described herein with respect to FIG. **7**.

[0054] In contrast to the manufacture of the stamp **10** in FIGS. **3** to **6**, here a stamp preform **10'** is formed by first applying vacuum to the passages **52***a, b* in the stamp chuck **32** to pull the portion of the glass **20'**(backing material **12'**) on which the backing layer **18** is to be formed and which was positioned thereunder by the movements of the stock roll **70** and the rollers thereagainst, and the perimeter clamp **38** is pushed from a location below this portion of the glass **20'** (backing material **20'**) to extend along, and press, the perimeter of the discrete portion **62** of the glass **20'** (backing material **20'**) on which the patterned layer **18** is to be formed against the perimeter of the stamp chuck **32**. Thereafter, the manufacture of the patterned layer **18** follows a similar sequence as that shown and described with respect to FIGS. **3** to **6**, wherein the paradigm for positioning the primer coated surface of the glass, here glass **20'** (backing material **20'**) in contact with the pattern material layer **44** in liquid form, the curing of the pattern material layer **44** by directing UV energy or light through the stamp chuck **32** and the glass **20'** (backing material **20'**) into the pattern material layer **44** to cure it, and the sequence of pulling the glass, here glass **20'** (backing material **20'**) away from the master **20** with the patterned material layer **18** adhered thereto are performed.

[0055] Once the portion of the glass **20'** (backing material **20'**) just having the patterned layer formed thereon is pulled from the master **20**, the perimeter clamp **38** is withdrawn and the vacuum in the passages **52***a, b* of the stamp chuck **32** are relieved and a slight positive pressure, compared to ambient pressure surrounding the stamp chuck **32**, to help release the glass **20'** (backing material **20'**) from the glass **20'** (backing material **20'**) facing surface of the stamp chuck **32**, and the stock roll **70** and first and second rollers **84***a, b* and **86***a, b* rotated to index a new or fresh, primer layer **26** coated discrete portion **62** of the glass **20'** (backing material **20'**) to the position between the stamp chuck **32** and the current, or expected, location of a master **20** facing the stamp chuck **32**. The indexing of the discrete portion **62** of the glass **20'** (backing material **12'**), cleaning and recoating a master stamp template **30**, and positioning a master stamp template **30** to face the stamp chuck **32**, and the forming of the patterned layer **18** on portions of the glass **20'**(backing material **12'**) is repeated until an entire roll of glass **20'** (backing material **12'**) is depleted, after which a new roll of glass **20'** (backing material **12'**) can be loaded into the apparatus and the process repeated.

[0056] As stamp pre-forms **10'** are formed, and the stock roll **70** and rollers **84***a, b*, **86***a, b* rotated to index a new portion of the glass **20'** (backing material **20'**) to the position between the stamp chuck **32** and the current, or expected, location of a master **20** facing the stamp chuck **32**, the stamp pre-forms **10'** are located to the downstream, in the glass **20'** (backing material **20'**) feed direction, of a stamp separation device **90**. The rotation of the stock roll **70** and rollers positions the stamp preforms **10'** to be positioned such that the end of the glass **20'** (backing material **20'**) forming the leading edge of the stamp preform **10'** is the desired sidewall length of a finished stamp **10** from the location where a stamp **10** is singulated from the length of glass **20'** (backing material **20'**) facing surface of the stamp chuck **32** by cutting though or scoring and breaking along a line glass **20'** (backing material **20'**) to singulate a stamp **10** therefrom. The stamp preform **10** is held in place by a table (not shown) or other support mechanism, and cut with the stamp separation device **90**, for example a laser, by scoring the glass **20'** (backing material **20'**) across the length direction thereof and then bending it along the score, or other mechanisms such as by use of a diamond cutting wheel or other cutting device. The now separated stamp **10** is moved by a movable robot arm **92** and placed just above a cassette holding portion of a cassette apparatus, for example a cassette **93** with shelves **93***a-c*, connected to a lift rod **96**. The shelves **93***a-c* are equally spaced opposed side shelves aligned to receive a stamp **10** with room between the shelves **93***a-c* sufficient to allow the movable robotic arm **92** access. Once a stamp **10** is located above, for example shelf **93***a*, the lift rod **96** then moves the cassette **93**, and thus shelf **93***a* upwardly to locate the stamp **10** on shelf **93***a* and position shelf **93***b* just below where the next stamp **10** will be positioned by the robotic arm **92**.

[0057] FIG. **8** is a flowchart showing a series of activities for manufacturing a stamp **10** according to the sequence of processes and the apparatus described with respect to FIG. **7**. Here the backing material **12**, here thin stamp glass **20'** (backing material **12'**) having a thickness on the order of 200 microns, is provided on a backing material supply or stock roll **70** wherein a length of glass **20'** (backing material **12'**) equal to at least several discrete portions **62** of glass **20** of a finished stamp **10** in the X or Y directions of FIG. **1**, and, after a pattern layer is formed on the discrete portions **62** thereof, the length or strip of glass **20'** (backing material **12'**) is moved toward a take up roll **73**. Once the patterned layer **18** is formed on a discrete portion **62** of the glass **20'**, a pre-stamp **10'** is formed, which can later be cut from the length of glass **20'** (backing material **12'**) to form a stamp **10**. To manufacture the pre-stamp **10'**, the master chuck **40** for holding a stamp master stamp template **30**, and the stamp chuck **32**, configured for chucking the length of glass **30'** directly between the stamp chuck **32** and the master chuck **30** thereto, having the fluid passages **52***a-c* and operation described herein with respect to FIGS. **3** to **5**, are provided between the stock roll **70** and take up roll **73** such that the length of glass **20'** (backing material **12'**) passes therebetween Here, to form a pre-stamp **10'**, the stock roll **70** is

rotated in Act **800** to unroll therefrom a discrete amount or a discrete portion **62** of the length of glass **20**, the portion having a dimension, in the direction between the stock roll **70** and take up roll **73** slightly larger than the side dimensions of a finished stamp **10**, and the glass **20'** (backing material **12'**) has a similar dimension in the direction perpendicular thereto. The length or strip of glass **20'** (backing material **12'**) on the stock roll is pre-cleaned and dried before being rolled up to provide the stock roll **70**, and as the stock roll **70** is unrolled in Act **800**, a primer application device **74** such as a sprayer bar extending across the width of the glass **20'** (backing material **12'**) (in the depth direction of FIG. **7**) applies a primer material in Act **812** on the clean portion of the length of glass **20'** (backing material **12'**) unwound therefrom to form the primer layer **26** as it passes thereunder. Optionally, prior to being coated with the material forming the primer layer **26**, the portion of the length of glass **20'** (backing material **12'**) can be cleaned in Act **804** and dried in Act **808** as it is unwound from the stock roll **70**. Then, the primer application device **74** applies the primer layer material **44** to form the primer layer **26** to the just cleaned portion of the length of glass **20'** (backing material **12'**) taken from the stock roll **70** in Act **812**. Here, the distance from where the glass **20'** (backing material **12'**) leaves the stock roll **70** to the location of the stamp chuck **32** and facing master chuck **30** is greater than the length, in the roll to roll direction of the portion of glass **20'** (backing material **12'**) used to manufacture a pre-stamp **10'**. As one portion of the glass **20'** (backing material **12'**) is cleaned and coated, or simply coated, with the primer material, the previously primer material coated portion of the glass **20'** (backing material **12'**) is moved between the stamp chuck **32** and the master chuck **40** and chucked to the stamp chuck in Act **814**.

[0058] Once a master stamp template **30** receives a coating of a release layer **42** in Act **818** and a layer of the liquid PDMS forming the pattern material layer **44** thereon, it is mounted on the turntable and is indexed by the turntable **80** to be positioned and mounted on a master chuck **40** to be facing, and properly aligned to, the facing surface of the stamp chuck **32** in Act **816**. This can be performed before or after the discrete portion **62** of the glass **20'** is positioned between the mater stamp template **30** and the stamp chuck **32** in Act **814**. Alternatively, the master chuck **40** can be mounted to the turntable **80**, such that the master stamp template **30** is replaced on the master chuck **40** while that is on the turntable **80**. Vacuum is applied to the vacuum passages **52***a-c* in act **825**, and the perimeter clamp **38** is raised to push the perimeter of the discrete portion **62** of the glass **20'** against the stamp chuck **30** in Act **826**. The sequence of Acts **825** and **826** may be reversed.

[0059] After the primed surface of the portion of the glass **20'** (backing material **20'**) is positioned and facing a master stamp template **30** and the perimeter clamp **38** is lifted from a location below the portion of the glass **20'** (backing material **20'**) to extend along, and press, the perimeter of the portion of the glass **20'** (backing material **20'**) on which the patterned layer **18** is to be formed against the perimeter of the stamp chuck **32** in act **824**. Thereafter, the manufacture of the patterned layer follows a similar sequence to that shown and described with respect to FIGS. **3** to **4**, wherein in Act **826** the coated surface of the glass, here glass **20'** (backing material **20'**) is moved away from the stamp chuck **32** as shown and described with respect to FIGS. **4**A to **4**C hereof and into contact with the pattern material layer **44** in liquid form, in act **830** the pattern layer material **44** is cured by directing UV energy or light through the stamp chuck **32** and the glass **20'** (backing material **20'**) into the pattern material layer **44** to cure, and in Act **834**, the portion of the glass **20'** (backing material **12'**) and the pattern layer thereof in removed from the master **20** with the patterned material layer **18** adhered thereto as shown and described with respect to FIGS. **4**C to **4**A hereof.

[0060] Once the portion of the glass **20'** (backing material **20'**) just having had the patterned layer formed thereon is pulled from the master **20**, vacuum in the passages **52***a-c* are relieved, and the stock roll **70** and take up roll **73** again moved in Act **800** to index a new discrete portion **62** of the glass **20'** (backing material **20'**) to the position between the stamp chuck **32** and the current, or expected, location of a master **20** facing the stamp chuck **32**, and the process repeated while the just formed pre-stamp moves toward the take up roll in act **838**. The master stamp template **30** is than moved, by the turntable **80**, out of alignment with the stamp chuck **32** in act **844**, removed from the turntable and cleaned in Act **850**, and again coated with the release layer **44** in act **818**. The release layer **44** coated master stamp template **30** is then again coated with the pattern layer material **44** in act **822**, and again mounted to a master chuck **40** in Act **823**. The process of indexing the portion of the glass **20'** (backing material **12'**), cleaning and recoating the masters, and positioning them to face the stamp chuck **32**, is repeated until an entire roll of glass is coated with patterned layers **18**, after which a new roll of glass **20** (backing material **12'**) can be loaded into the apparatus and the process repeated. As stamp pre-forms **10'** composed of a portion of the glass **20'** (backing material **12'**), the primer layer **26** and the patterned layer **18** are formed, and the stock roll **70** and take up roll **73** moved to index a new portion of the glass **20'** (backing material **20'**) to the position between the stamp chuck **32** and the current, or expected, location of a master **20** facing the stamp chuck **32**, the stamp pre-forms **10'** will become rolled into a the take up roll **73** which glass **20'** (backing material **12'**) can be later rolled out, and individual stamps **10** formed therefrom.

[0061] In FIG. **8**A, the actions required to singulate a stamp **10** from a sheet of glass having stamp pre-forms **101** thereon according to FIG. **9** hereof is shown. Here, the Act of FIG. **8**, up to and including Act **834** are the same as those of FIG. **8**. However, here, after the glass **20'** is moved away from the master stamp template **30** in Act **834**, the glass **20'** forming a stamp pre-form **10'** is moved outwardly of the space between the stamp chuck **32** and the master stamp template **30** by rotation of the stock roller **70** and rollers **84***a, b* and **86***a, b* to be received on a support at Act **840**. Then, a stamp separation device **90** is used to singulate the stamp **10** from the glass **20'** in Act **842**, and stored on one of the sets of shelves **93***a-c* in a cassette **93** in Act **844**.

[0062] FIGS. **10** to **15** and **17** are schematic side views of representative equipment useful for manufacturing a cushioned stamp **10**, i.e., one having a cushioning layer **100** between the backing material **12** and the patterned layer **18**, including forming a cushioning layer **100** on the backing material **12**, a patterned layer **18** having a desired pattern **19**, the obverse of a pattern on a master stamp template **30**, on the cushioning layer **100**, wherein the cushioning layer **100** is formed on discrete portions of the backing material **12** on which the patterned layer **18** is to be formed. As shown in FIGS. **17** and **18**, the stamp manufacturing apparatus **150**

here is similar to that shown in FIG. **7** or **9**, wherein glass **20'** in strip form, i.e. as unsingulated backing material **12'** is unwound from a stock roll **70** to incrementally move discrete portions **62** of the length of glass **20'** (backing material **12'**) toward a take up roll **73**. However, in contrast to the apparatus of FIGS. **7** and **9**, here two sets of master chucks, with corresponding stamp glass chucks to hold and position the glass **20'** (backing material **12'**) with respect thereto, are provided between the stock roll **70** and take up roll **73** (or between the stock roll **70** and a singulation device as described herein and shown schematically in FIG. **9**), to first form the cushioning layer **100** on discrete portions of the glass **20'** (backing material **12'**) and then form the patterned layer **18** on the cushioning layer **100**. Once the patterned layer **18** is formed on the cushioning layer **100**, a pre-stamp **10'** is formed, which can thereafter be cut from the length of glass **20'** (backing material **12'**) to form a completed stamp **10**.

[0063] To manufacture the pre-stamp **10'** having a cushioning layer **100**, a blanking master chuck **101** for holding a cushioning layer master **103** and a master chuck **40** for holding a stamp master stamp template **30** are provided, and a blanking stamp chuck **102** facing the blanking master chuck **101** and the stamp chuck **32** facing the stamp master chuck **40** are provided in that physical order from the stock roll **70** to the take up roll **73** as shown in FIG. **17**. Each of the stamp chuck **32** and the blanking stamp chuck **102** are configured to chuck a discrete portion of the length of glass **20'** (backing material **12'**) on which a cushioning layer **100** and patterning layer **18** are to be sequentially formed, and each of the stamp chuck **32** and the blanking stamp chuck **102** have the structure and operational capability of the stamp chuck **32** shown in FIGS. **3** to **5** hereof and described herein with respect thereto, and they are provided between the stock roll **70** and take up roll **73** such that the length of glass **20'** (backing material **12'**) passes thereunder.

[0064] Here, to form a pre-stamp **10'** having the cushioning layer **100**, the stock roll **70** is rotated to unroll therefrom a discrete amount or discrete portion **62** of the length of glass **20'**, the portion having a dimension, in the direction between the stock roll **70** and take up roll **73** encompassing slightly larger than the side dimensions of a competed stamp. For example, if the glass **20** (backing material **12**) of a finished stamp is 15 inches long on each side thereof in the X and the Y directions, a discrete portion of the length of glass **20'** (backing material **12'**) greater than 15 inches is unrolled from the stock roll **70**, and taken up by the take up roll **73**, such that a new or fresh discrete portion **62** of the length or strip of glass **20'** (backing material **12'**) is positioned between the blanking master chuck **101** and the stamp cushion chuck, and a discrete portion **62** of the glass **20'** (backing material **12'**) having a cushioning layer **100** previously formed thereon using the cushioning layer master **103**, indexes into the space between the master chuck **40** and the stamp chuck **32**. Here, to make a stamp **10** having a backing material **12** of side dimensions of for example 15 by 15 inches, the strip of glass, in the depth direction of FIG. **17** (into the page) is 15 inches. The length of the strip of glass **20'** (backing material **12'**) on the stock roll **70** is preferably pre-cleaned before being rolled up to provide the stock roll **70**, and as the stock roll **70** is unrolled, a primer application device **74** such as a sprayer bar extending across the width of the length of glass **20'** (backing material **12'**) (in the depth direction of FIG. **17**) applies a primer material on the clean portion of the length of glass **20'** (backing material **12'**) unwound therefrom to form the primer layer **26** as it passes thereunder. Optionally, prior to being coated with the material forming the primer layer **26**, the portion of the length of glass **20'** (backing material **12'**) can be cleaned and dried as it is unwound from the stock roll **70**. Then, the primer application device **74** applies the primer material to form the primer layer **26** to the just cleaned portion of the length of glass **20'** (backing material **12'**) taken from the stock roll **70**. Here, the distance from where the glass **20'** (backing material **12'**) leaves the stock roll **70** to the location of the stamp cushion chuck **102** and facing master cushion chuck **101** is greater than the length of a discrete portion **62** of the glass **20'** (backing material **12'**) on which the cushioning layer is to be formed, i.e., greater than the side dimension of the backing material **12** of a finished stamp **10**. However, the gap between adjacent portions of the glass **20'** (backing material **12'**) where the cushioning layer **100** and patterning layer **18** are form should be minimized, to avoid waste of the glass **20'** (backing material **12'**). Thus, the center to center spacing between the master cushion chuck **102** and the master chuck **102** is a multiple of the side wall length of a finished stamp, for example 2 or three times that length, such that the portion of the glass **20'** (**12'**) between the stamp cushion chuck **102** and the master chuck **40**, during the production of pre-stamps thereon, will include a number of cushioning layers thereon equal to the multiple of the side of the wall length minus 1. For example, if the multiple is two, then one cushioning layer **100** will be located on the portion of the glass **20'** (**12'**) between the stamp cushion chuck **102** and the master chuck **40**, if the multiple if three, i.e., the center to center spacing between the master cushion chuck **102** and the master chuck **102** is three times the side length of a finished stamp, then two cushioning layers **100** will be located on the portion of the glass **20'** (**12'**) between the stamp cushion chuck **102** and the master chuck **40** during production of stamp preforms on the glass **20'** (backing layer **12'**).

[0065] As one portion of the glass **20'** (backing material **12'**) is cleaned and coated, or simply coated, with the primer material to form the primer layer **26** thereon, the previously primer material coated portion of the glass **20'** (backing material **12'**) having the primer layer **26** thereon is moved between the stamp cushion chuck **102** and facing master cushion chuck **101**, and, simultaneously, a discreet portion of the glass **20'** (backing layer **12'**) having a cushioning layer **100** formed thereon, is moved between the stamp chuck **32** and the master chuck **40**.

[0066] As with the device described with respect to FIGS. **3** to **5** hereof with respect to the cleaning and replacing of a master stamp template **30** used to form a patterning layer **18**, after each use of the cushioning layer master **103** to form a thin, planar outer surface, cushioning layer **100** on a discrete portion of the glass **20'** (backing material **12'**), the cushioning layer master **103** must be cleaned, recoated with the release layer, for example using the CVD chamber shown in FIG. **7**A, and the material of the cushioning layer in its liquid, uncured form, using a spin coater such as spin coater **55** in FIG. **7**A and repositioned for reuse to form another cushioning layer **100**. Here, that is accomplished by mechanically moving the a cushioning layer master **103** having a blank surface formed on one surface side thereof, or the master chuck **101** with the cushioning layer master **103** thereon, to the side of the location of the stamp chuck

102, such as by mounting the cushioning layer master **103** or the master chuck **101** with the cushioning layer master thereon on a turntable **80** and rotating the turntable **80** between a location where the master is positioned facing the stamp cushion chuck **102** and a location where the cushioning layer master **103** is spaced from the stamp cushion chuck **102** and somewhat to the side thereof to enable removal of the cushioning layer master **103** without physical or mechanical interference with the stamp cushion chuck **102**. For example, a turntable **80** having one or more master receiving stations **86** thereon or in a master chuck receiving surface thereof, can receive a cushioning layer **103** or a master cushion chuck **101**, or a master chuck **40**, at each receiving station. By rotating a shaft **82** connected to the center of the turntable **80** at the center thereof, about a centerline **84** of the shaft, the master receiving stations **86** can be moved in arcs to be positioned below and facing the stamp cushion chuck **102** and stopped thereat for the process of forming the cushioning layer **100** on the portion of the glass **20'** (backing material **12'**) between that master **103** and the stamp cushion chuck **102**, and then the turntable **80** can be indexed in another rotational motion about the axis **84** to position and fix an additional master cushion chuck **101** to face the stamp cushion chuck **102**. Thus, by providing a plurality of identical cushioning layer masters **103**, as each cushioning layer master **103** is used to form a cushioning layer **100** and moved away from the location of the stamp cushion chuck **102**, a new cushioning layer master **103** having a blank surface one side thereof, with a release layer **42** and a layer of liquid PDMS as the cushioning layer material **104** thereon is indexed by the turntable **80** to be positioned facing, and properly aligned to, the facing surface of the stamp cushion chuck **102**.

[0067] Once a cushioning layer master **103**, with a release layer **42** and a layer of liquid PDMS as the cushioning layer material **104** thereon is indexed by the turntable **80** to be positioned facing, and properly aligned to, the facing surface of the stamp cushion chuck **102** and a portion of the primer coated glass **20'** (backing material **12'**) is moved into the cushioning layer **100** forming apparatus with the primer layer **26** facing toward the master cushion chuck **101**, the apparatus is ready to form a cushioning layer **100** on the portion of the glass **20'** (backing material **12'**) underlying the stamp cushion chuck **102**. At the same time, a cushioning layer master **103** which was just used to form a cushioning layer **100** and which was moved by the turntable **80** away from the location facing the stamp cushion chuck **102** is removed from a master cushion chuck **101** on the turntable **80** of the stamp forming apparatus, such as manually or by an automated methodology such as with a robot. A clean, and coated with the release layer **42** and cushioning layer material **104**, cushioning layer master **103** is then located on the open master chuck **101**. Alternatively, the just removed master **103** could be cleaned, recoated with the release layer **42**, coated with a fresh cushioning material layer **104**, and placed on the open master cushion chuck **101** from which it had been removed. After the new or previous cushioning layer master **103**, coated with a new release layer **42** and a cushioning material layer **104** is located on the turntable **80**, it may be moved to the location facing the stamp cushion chuck **102**, a new or fresh discrete portion of the glass **20'** (backing material **12'**) positioned therebetween, and a new cushioning layer **100** is formed on the discrete portion of the glass **20'** (backing material **12'**) is formed thereon as described herein.

[0068] The stamp cushion chuck **102** has the same structure as the stamp chuck **32**. Thus, similarly to the manufacture of the patterning layer **18** of the stamp **10** in FIGS. **3** to **6** hereof, here the cushioning layer **100** is formed on the glass **20** by first applying vacuum to the passages **52***a, b* in the stamp cushion chuck **102** to pull the discrete portion of the glass **20'** (backing material **12'**) thereagainst, and the perimeter clamp **38** is pushed upwardly from a location below the portion of the glass **20'** (backing material **20'**) to extend along, and press, the perimeter of the discrete portion **62** of the glass **20'** (backing material **20'**) on which the cushioning layer **100** is to be formed, against the perimeter of the stamp cushion chuck **102**. Thereafter, the manufacture of the cushioning layer **100** follows a sequence wherein the paradigm for positioning the primer coated surface of the discrete portion of the glass **20'** (backing layer **12'**) in contact with the cushioning layer material **104** in liquid form, the curing thereof by directing UV energy or light through the stamp cushion chuck **102** and the glass **20'** (backing material **12'**) into the cushioning layer material **104** to cure it, and the sequence of pulling the glass **20'** (backing material **12'**) away from the master **101** with the newly formed cushioning layer **100** adhered thereto are performed.

[0069] Next the discrete portion of the glass **20'** (backing material **12'**) having the cushioning layer is moved laterally toward the next set of facing chuck, the stamp chuck **32** and the master chuck **30**, by the unrolling of the backing material **12'** roll **70** and taking up of the portion of the backing material **12'** having pre-stamps **10'** formed thereon by the take up roll **73**. The patterned layer **18** of the pre-stamp **10'** is there formed over the cushioning layer **100** using the same sequence as those used to form the patterning layer in FIGS. **3** to **5**, i.e., by first applying vacuum to the passages **52***a, b* in the stamp cushion chuck **102** to pull the discrete portion of the glass **20'** (backing material **12'**) thereagainst, and the perimeter clamp **38** is pushed from a location below the discrete portion of the glass **20'** (backing material **12'**) having the cushioning layer **100** generally centered thereon to press the perimeter of the discrete portion of the glass **20'** (backing material **12'**) having the cushioning layer **100** on which the patterned layer **18** is to be formed against the perimeter of the stamp chuck **32**. Thereafter, following the pressuring sequence of the region between the glass **20'** (backing material **12'**) and the facing surface of the stamp chuck **32** as shown in FIGS. **3** to **5**, the cushioning layer **100** is positioned in contact with the pattern material layer **44** in liquid form, and the pattern material layer **44** is cured by directing UV energy or light through the stamp chuck **32**, the cushioning layer **100**, and the glass **20'** (backing material **12'**) into the pattern material layer **44**, and thereafter the sequence of pulling the glass **20'** (backing material **12'**) having the cushioning layer **100** and patterned layer **18** formed thereon to for a pre-stamp away from the master **20** with the patterned material layer **18** adhered thereto as described using sequential application of vacuum in the zones C to A of FIGS. **4**A to **4**C are performed.

[0070] Once the portion of the glass **20'** (backing material **12'**) just having the patterned layer **18** formed thereon is pulled from the master **20**, vacuum in the passages are relieved, and the stock roll **70** and take up roll **73** moved to index a new portion of the glass **20'** (backing material **12'**)

having the cushioning layer **100** thereon to the position between the stamp chuck **32** and the current, or expected, location of a master **20** facing the stamp chuck **32**, and the process repeated. The process of indexing the portion of the glass **20'** (backing material **12'**), cleaning and recoating the masters, and positioning them to face the stamp chuck **32**, is repeated until an entire roll of glass is coated with cushioned layers **100** and patterned layers **18** thereover, after which a new roll of glass **20** (backing material **12'**) can be loaded into the apparatus and the process repeated. As stamp pre-forms **10'** are formed, and the stock roll **70** and take up roll **73** moved to index a new discrete portion of the glass **20'** (backing material **12'**) to the position between each set of chucks, the stamp pre-forms **10'** will become rolled into a roll which can be later rolled out, and individual stamps formed therefrom

[0071] FIGS. **16**A and **16**B are a flowchart showing a series of activities for manufacturing a cushioned stamp **10** according to the sequence of processes described with respect to FIGS. **10-15** and **17**. Here the backing material **12'**, here thin stamp glass **20'** having a thickness on the order of 200 microns, is provided on a backing material supply or stock roll **70** wherein a length of glass **20'** (backing material **12'**) equal to at least several pieces of the glass **20** in the X or Y directions of FIG. **1**, and, after both a cushioning layer **100** and patterned layer **18** are formed on discrete portions thereof, the length of glass **20'** (backing material **12'**) is moved toward a take up roll **73**. The glass **20'** (backing material **12'**) moves from the stock roll **70** to the take up roll **73** in discrete steps, separated in time, the physical length of the portion of the glass **20'** (backing material **12'**) moved in each step a function of the distance from the pull out location of the glass **20'** (backing material **12'**) from the stock roll **70** the location where the cushioning layer **100** is formed on a discrete portion thereof. Once both the cushioning layer **100** and the patterned layer **18** are formed on the discrete portion of the glass, a pre-stamp **10'** is formed, which can later be cut from the length of glass **20'** (backing material **12'**) to form a finished stamp **10**.

[0072] Here, to manufacture a pre-stamp, the stock roll **70** is rotated in Act **1600** to unroll therefrom a discrete amount or the portion of the length of glass **20**. The length of glass **20'** (backing material **12'**) on the stock roll may be pre-cleaned and dried before being rolled up to provide the stock roll **70**, and as the stock roll **70** is unrolled in Act **1600**, a primer application device **74** such as a sprayer bar extending across the width of the glass **20'** (backing material **12'**) (in the depth direction of FIG. **17**) applies a primer material in Act **1612** on the clean portion of the length of glass **20'** (backing material **12'**) unwound therefrom to form the primer layer **26** as it passes thereunder. Optionally, prior to being coated with the material forming the primer layer **26**, the portion of the length of glass **20'** (backing material **12'**) can be cleaned in Act **1604** and dried in Act **1608** as it is unwound from the stock roll **70**. Then, the primer application device **74** applies the primer material to form the primer layer **26** to the just cleaned portion of the length of glass **20'** (backing material **12'**) taken from the stock roll **70** in Act **1612**. Here, the distance from where the glass **20'** (backing material **12'**) leaves the stock roll **70** to the location of the stamp cushion chuck **102** and facing master cushion chuck **101** is greater than the length, in the roll to roll direction of the discrete portion of glass **20'** (backing material **12'**) used to manufacture a pre-stamp **10**, and as one portion of the glass **20'** (backing material **12'**) is cleaned and coated, or simply coated, with the primer material, the previously primer material coated portion of the glass **20'** (backing material **12'**) is moved between the stamp cushion chuck **102** and the master cushion chuck **101** in Act **1614**.

[0073] Once a cushioning layer master **103** receives a coating of a release layer **42** in Act **1618** and thereafter a layer of liquid cushion layer material **104**, for example PDMS, thereon in Act **1622**, the cushioning layer master **103** is positioned on a master cushion chuck **101** in Act **1623** and indexed by the turntable **80** to locate the release layer coated and cushioning layer material coated cushioning layer master **103** to be facing, and properly aligned to, the facing surface of the stamp cushion chuck **102** in Act **1624**. Then, with the discrete portion **62** of the primer coated glass **20'** (backing material **12'**) with the primer layer **26** thereof facing toward the master cushion chuck **101** with the cushioning material layer **104** thereon, the apparatus is ready to form a cushioning layer **100** on the discrete portion **62** of the glass **20'** (backing material **12'**) underlying the stamp cushion chuck **102**. At the same time, in Act **1601** a master **103** which was just used to form a cushioned layer **100** is removed using the turntable **80**, cleaned, and coated with the release layer **42** and cushioning layer material **104**, repeating Acts **1618** and **1622**.

[0074] The cushioning layer **100** is formed by lifting the perimeter clamp **38** to push the perimeter for the discrete portion **62** of the glass against the stamp cushion chuck **102** and applying vacuum to pull the discreet portion of the glass **20** (backing material **12'**) against the facing surface of the stamp cushion chuck **102** in Act **1626**. Thereafter the primer coated surface of the glass **20'** (backing material **20'**) is moved into contact with the cushioning material layer **104** in liquid form in Act **1626**, and is cured in Act **1630** by directing UV energy or light through the stamp cushion chuck **102** and the glass **20'** (backing material **20'**) into the cushion material layer **104** to cure the cushioning material layer **104** into the cushioning layer **100** in Act **1630**, and the glass **20'** (backing material **20'**) with the cushioning layer **100** thereon, is pulled away from the cushioning layer master **103** in Act **1634**.

[0075] Once the portion of the glass **20'** (backing material **12'**) just having the cushioning layer **100** formed thereon is pulled from the cushioning layer master **103**, vacuum in the passages in the stamp cushion chuck **102** are relieved and the perimeter clamp **38** is withdrawn, and the stock roll **70** and take up roll **73** moved to index a new portion of the glass **20'** (backing material **20'**) to the position between the stamp cushion chuck **102** and the current, or expected, location of a cushioning layer master **103** facing the stamp cushion chuck **102** and a discrete portion of the glass **20'** (backing material **12'**) having a cushioning layer thereon is simultaneously moved to the region between the stamp chuck **32** and the master chuck **40** in Act **1640**.

[0076] Once a master stamp template **30** receives a coating of a release layer **42** in Act **1658** and a layer of patterning layer material **44** thereover, for example a layer of liquid PDMS, in Act **1662**, the master stamp template **30** is indexed by the turntable **80** to be positioned on a master chuck **40** in Act **1663** to be facing, and properly aligned to, the facing backing material chucking surface of the stamp chuck **32** in Act **1664**.

[0077] The patterned layer **18** of the stamp preform **10'** is formed by raising the perimeter clamp **38** from a location

below the portion of the glass **20'** (backing material **20'**) to extend along, and press, the perimeter of the discrete portion of the glass **20'** (backing material **12'**) having the cushioning layer **100** generally centered thereon against the perimeter of the stamp chuck **32** and applying vacuum to the passages **52***a-c* in the stamp chuck **32** to pull the stamp thereagainst in act **1655**. Thereafter, the manufacture of the patterned layer **18** follows a similar sequence to that shown in FIGS. **3** to **5** and described herein with respect thereto, wherein cushioning layer **100** is moved into contact with the pattern material layer **44** in Act **1666**, which is cured by directing UV energy or light through the stamp chuck **32** and the glass **20'** (backing material **20'**), and the cushioning layer **100** and into the pattern material layer **44** Act **1670**. Once the pattern material layer **44** is cured to form the patterned layer **18**, the glass **20'** (backing material **20'**) with the cushioning layer **100** and patterned layer **18** thereon are pulled away from the master **20** in Act **1674**.

[0078] Once the portion of the cushioning layer **100** just having the patterned layer formed thereon is pulled from the master **20**, vacuum in the passages are relieved, and the stock roll **70** and take up roll **73** moved to simultaneously index a new cushioning layer **100** layer to the position between the stamp chuck **32** and the current, or expected, location of a master **20** facing the stamp chuck **32** and a primer layer **26** coated discrete portion of the glass **20'** (backing material **12'**) between the master cushion chuck facing the stamp cushion chuck **102** by moving the glass **20'**(backing material **12'**) in Act **1600**, and the process repeated.

[0079] While the foregoing is directed to embodiments of the present disclosure, other and further embodiments of the disclosure may be devised without departing from the basic scope thereof, and the scope thereof is determined by the claims that follow.

What is claimed is:

1. An apparatus for manufacturing a nano-imprint lithography stamp from a master template stamp, comprising:

a stamp chuck configured to selectively secure a stamp backing material thereto;

a master chuck configured to support a master template stamp, the master template stamp including a master pattern thereon, the master chuck configured to support the master template stamp in facing relationship to the stamp backing material when selectively secured to the stamp chuck; wherein

the master template stamp includes an electromagnetic energy curable material on and in the master pattern; and

the stamp chuck is configured and arranged to position a portion of the backing material thereon spaced therefrom and in contact with the electromagnetic energy curable material, and the stamp chuck is further configured to position the portion of the backing material in contact with the energy curable material, after it is cured, in contact with the stamp chuck.

2. The apparatus of claim **1**, further comprising a stock roll of a length of stamp backing material.

3. The apparatus of claim **2**, further comprising a take up roll configured to receive stamp backing material thereon.

4. The apparatus of claim **3**, wherein the length of stamp backing material extends between the master template stamp and the stamp chuck.

5. The apparatus of claim **4**, wherein at least one of the stock roller and the take up roller is configured to move a discrete portion of the backing material in the direction between the stock roller and the take up roller.

6. The apparatus of claim **2**, wherein the length of stamp backing material extends between the master template stamp and the stamp chuck; and

a singulation device is disposed adjacent to the master chuck, on the side thereof opposite to the stock roll.

7. The apparatus of claim **2**, further comprising a cushioning layer master and a cushioning layer stamp chuck in facing relationship with one another, wherein the cushioning layer master and the cushioning layer stamp chuck are disposed between the stock roll and the master template chuck.

8. A method of manufacturing a nano-imprint lithography stamp from a master template stamp, comprising:

selectively securing a stamp backing material to a stamp chuck;

positioning a master template stamp on a master chuck, the master template stamp including a master pattern thereon, the master chuck configured to support the master template stamp in facing relationship to the stamp backing material when it is selectively secured to the stamp chuck;

including an electromagnetic energy curable material on and in the master pattern; and

positioning a portion of the backing material supported by the stamp chuck the portion spaced therefrom and in contact with the electromagnetic energy curable material and exposing the electromagnetic curable material to electromagnetic energy an curing the curable material to form a solid thereof, and

positioning the portion of the backing material in contact with the energy curable material, after it is cured, in contact with the stamp chuck.

9. The method of claim **8**, further comprising:

prior to including the electromagnetic energy curable material on and in the master pattern, coating the master pattern with a release material; and

prior to securing the backing material to the stamp chuck, coating the backing material to be facing the master template chuck with a primer.

10. The method of claim **9**, further comprising a stock roll of a length of stamp backing material.

11. The method of claim **10**, further comprising a take up roll configured to receive stamp backing material thereon.

12. The method of claim **11**, wherein the length of stamp backing material extends between the master template stamp and the stamp chuck.

13. The method of claim **12**, wherein at least one of the stock roller and the take up roller is configured to move a discrete portion of the backing material in the direction between the stock roller and the take up roller.

14. The method of claim **10**, wherein the length of stamp backing material extends between the master template stamp and the stamp chuck; and

a singulation device is disposed adjacent to the master chuck, on the side thereof opposite to the stock roll.

15. The method of claim **10**, further comprising a cushioning layer master and a cushioning layer stamp chuck in facing relationship with one another, wherein the cushioning

layer master and the cushioning layer stamp chuck are disposed between the stock roll and the master template chuck.

16. An apparatus for manufacturing a nano-imprint lithography stamp from a master template stamp, comprising:

a first stamp chuck configured to selectively secure a stamp backing material thereto;

a first master chuck configured to support a cushion master, the cushion master including a blank pattern thereon, the first master chuck configured to support cushion master in facing relationship to the stamp backing material when selectively secured to the first stamp chuck; wherein

the cushion master includes an electromagnetic energy curable material on and in the master blank pattern; and

the first stamp chuck is configured and arranged to position a portion of the backing material thereon spaced therefrom and in contact with the electromagnetic energy curable material, and the first stamp chuck is further configured to position the portion of the backing material in contact with the energy curable material, after it is cured, in contact with the first stamp chuck.

a second stamp chuck configured to selectively secure a stamp backing material thereto;

a second master chuck configured to support a master template stamp, the master template stamp including a master pattern thereon, the second master chuck configured to support the master template stamp in facing relationship to the stamp backing material when selectively secured to the second stamp chuck; wherein the master template stamp includes an electromagnetic energy curable material on and in the master pattern; and

the second stamp chuck is configured and arranged to position a portion of the backing material thereon spaced therefrom and in contact with the electromagnetic energy curable material, and the second stamp chuck is further configured to position the portion of the backing material in contact with the energy curable material, after it is cured, in contact with the second stamp chuck.

17. The apparatus of claim **16**, further comprising a stock roll of a length of stamp backing material.

18. The apparatus of claim **17**, further comprising a take up roll configured to receive stamp backing material thereon.

19. The apparatus of claim **18**, wherein the length of stamp backing material extends between the cushion master and the stamp chuck.

* * * * *