US 20220163382A1

(19) **United States**

(12) **Patent Application Publication**

FU et al.

(10) **Pub. No.: US 2022/0163382 A1**

(43) **Pub. Date: May 26, 2022**

(54) **OPTICAL DEVICE METROLOGY SYSTEMS AND RELATED METHODS**

(71) Applicant: **Applied Materials, Inc.**, Santa Clara, CA (US)

(72) Inventors: **Jinxin FU**, Fremont, CA (US); **Kazuya DAITO**, Milpitas, CA (US); **Ludovic GODET**, Sunnyvale, CA (US)

(21) Appl. No.: **17/456,421**

(22) Filed: **Nov. 24, 2021**

Related U.S. Application Data

(60) Provisional application No. 63/117,585, filed on Nov. 24, 2020.

Publication Classification

(51) **Int. Cl.**

G01J 1/04	(2006.01)
G01J 1/08	(2006.01)

(52) **U.S. Cl.**

CPC ***G01J 1/0459*** (2013.01); ***G01J 1/08*** (2013.01); ***G01J 1/0425*** (2013.01)

(57) **ABSTRACT**

A method of optical device metrology is provided. The method includes providing a first type of light into a first optical device during a first time period; measuring a quantity of the first type of light transmitted from a first location on the top surface or the bottom surface during the first time period; coating at least a portion of an edge of the one or more edges with a first coating of optically absorbent material during a second time period that occurs after the first time period; providing the first type of light into the first optical device during a third time period that occurs after the second time period; and measuring a quantity of the first type of light transmitted from the first location on the top surface or the bottom surface during the third time period.

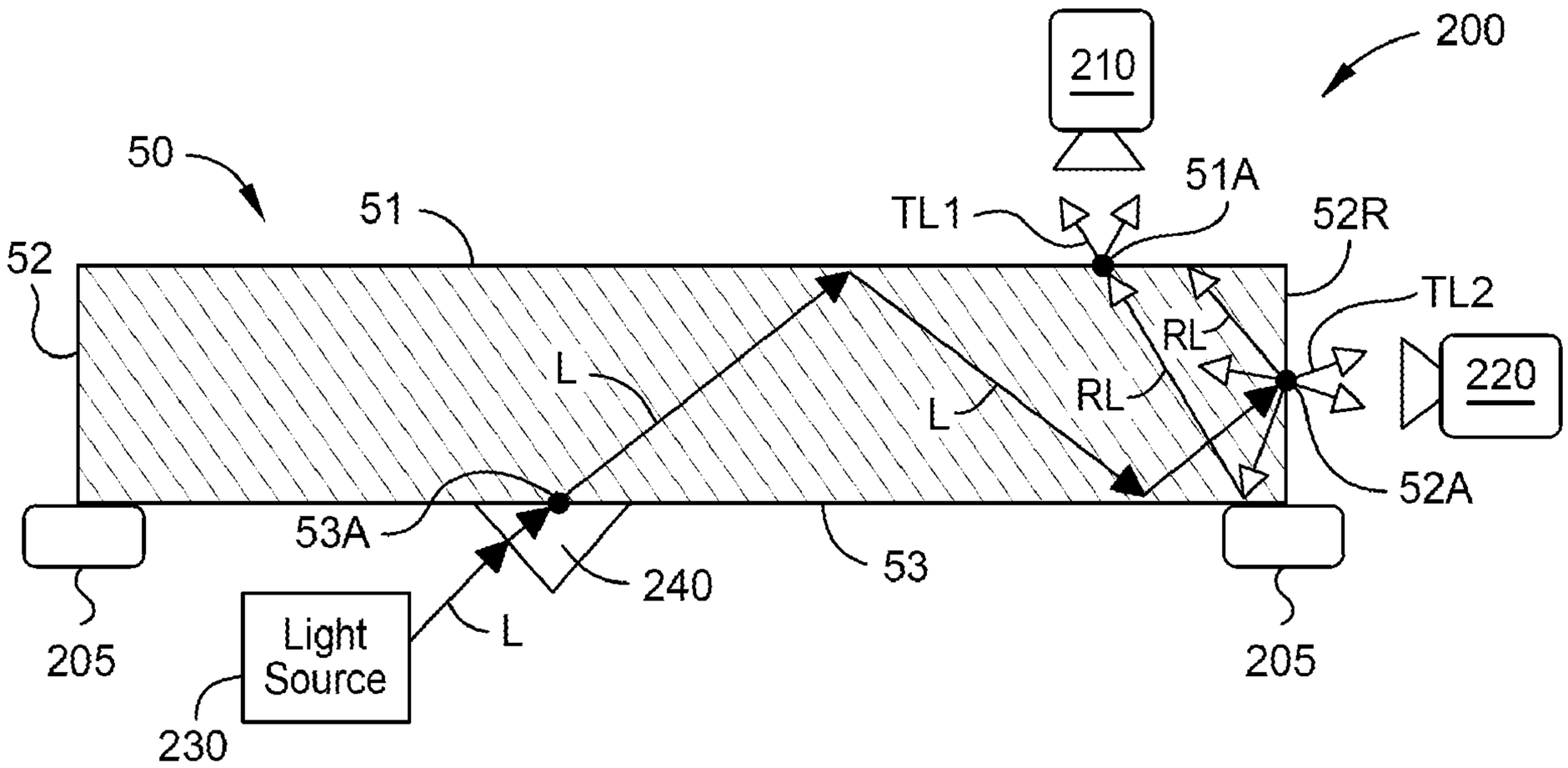

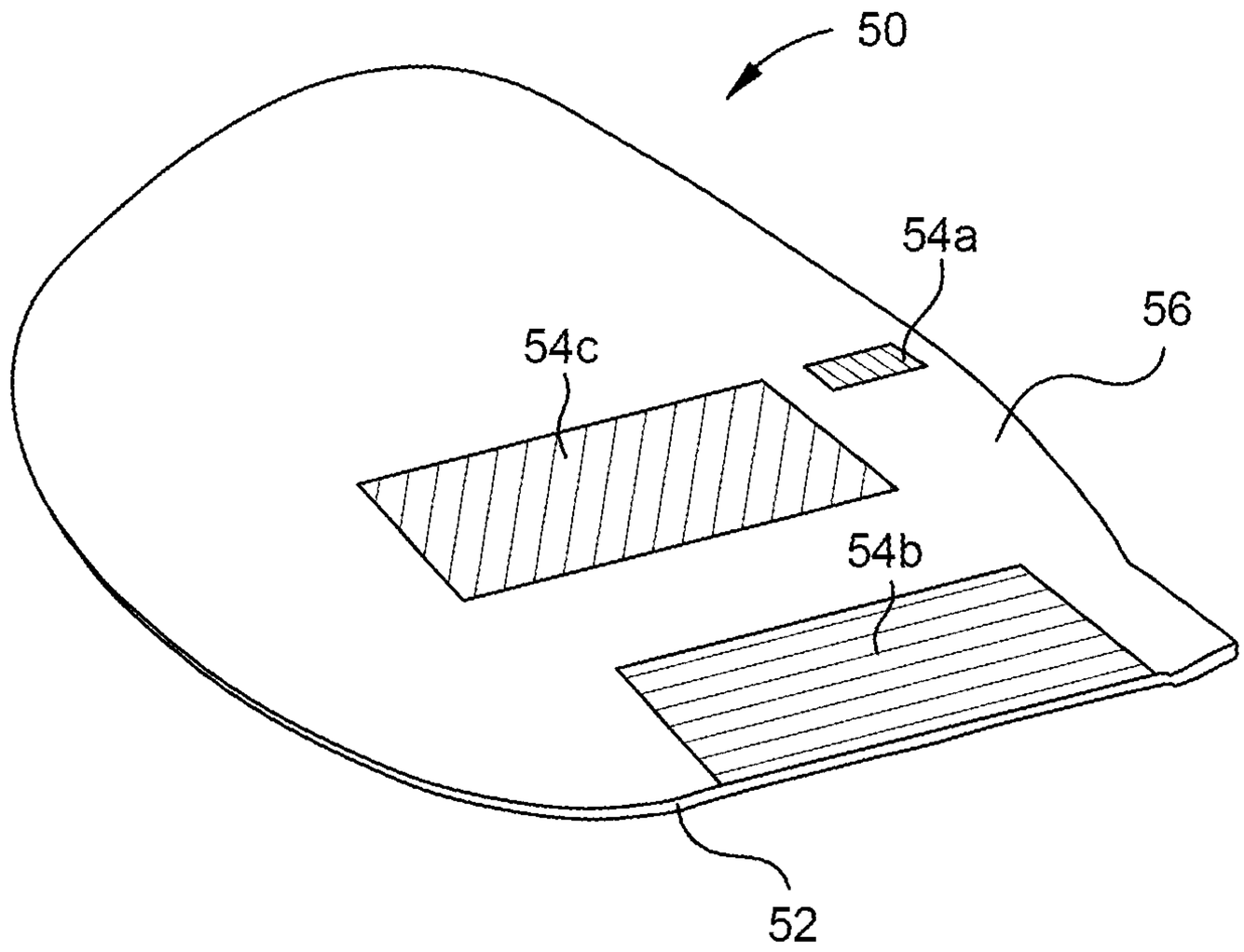

FIG. 1A

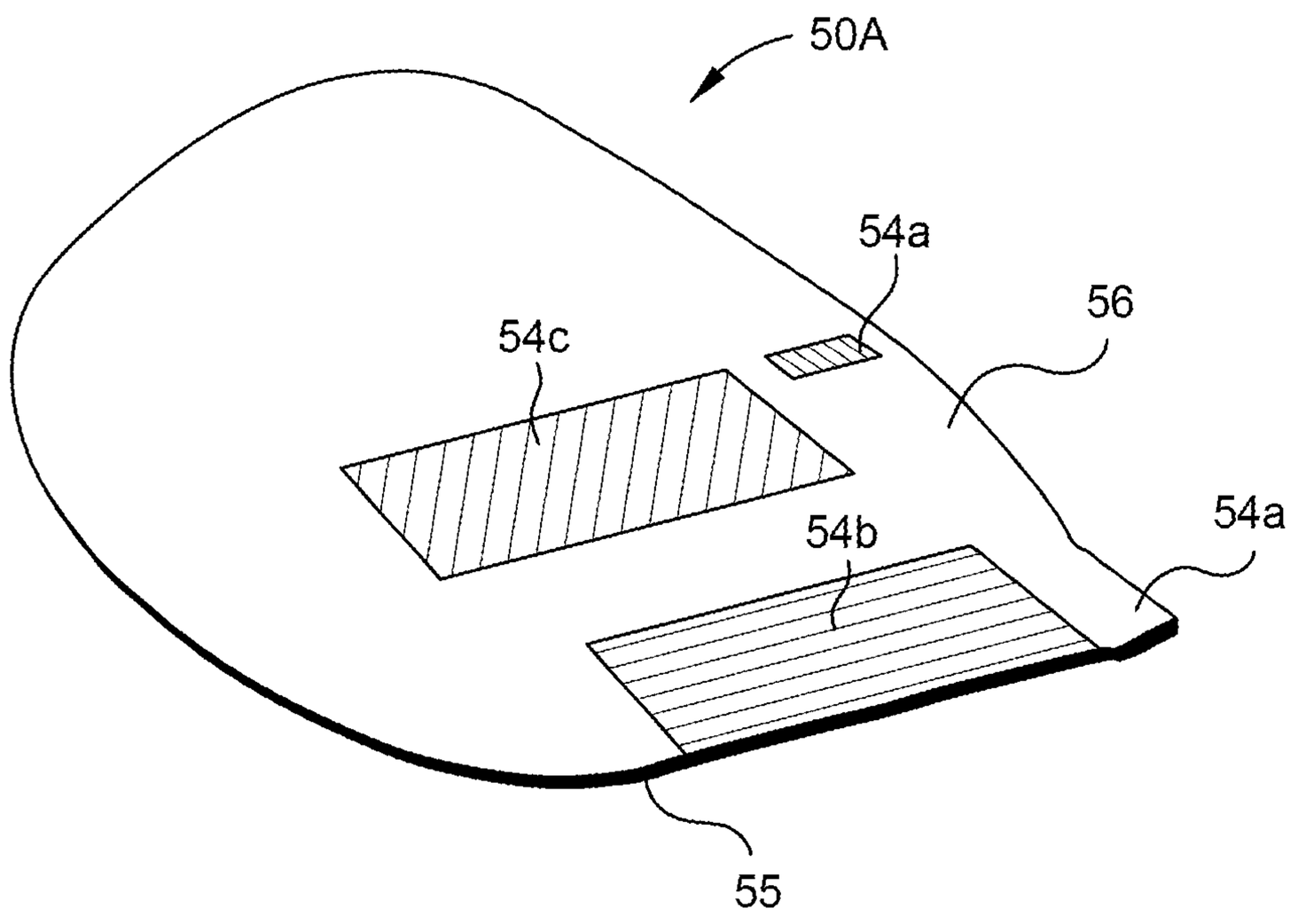

FIG. 1B

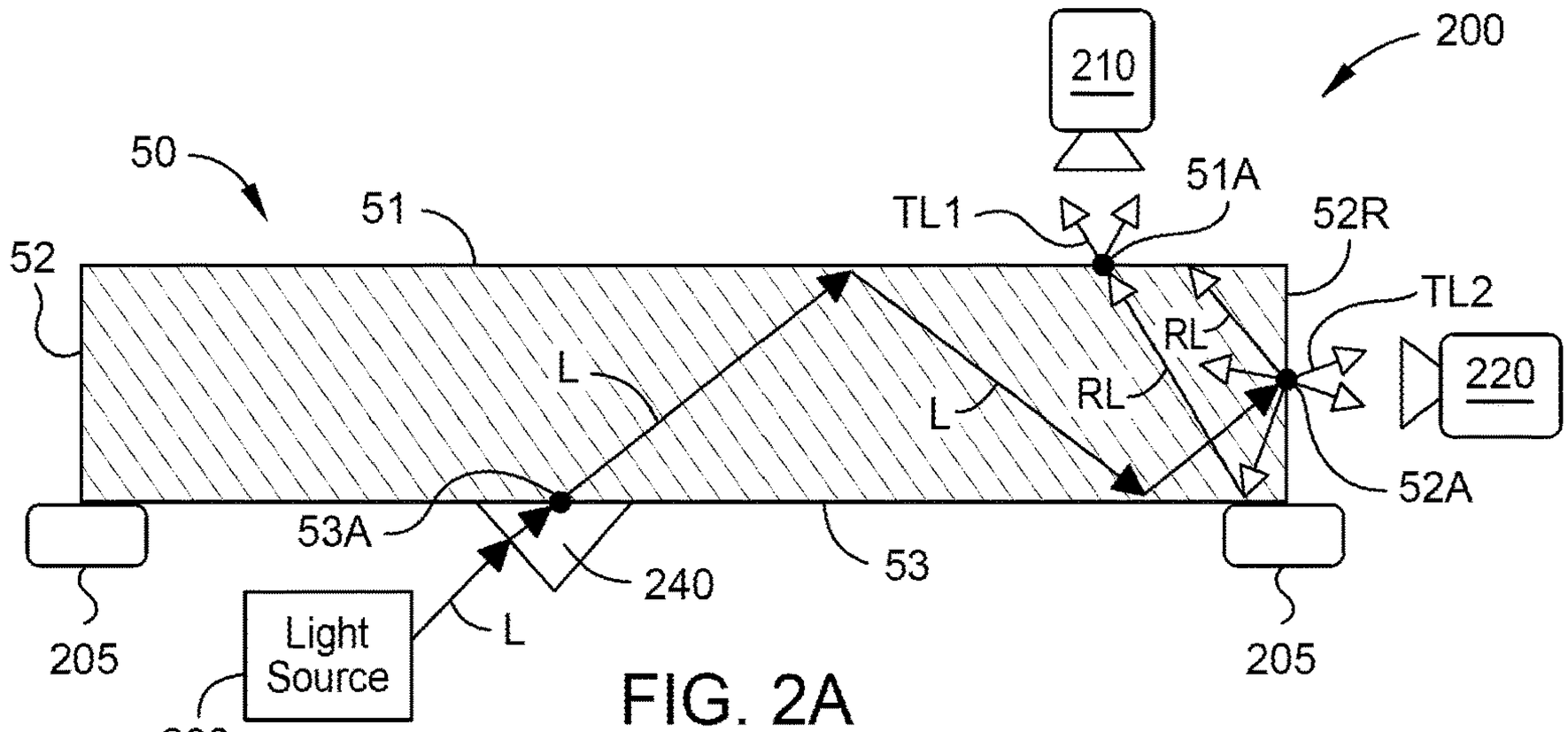

FIG. 2A

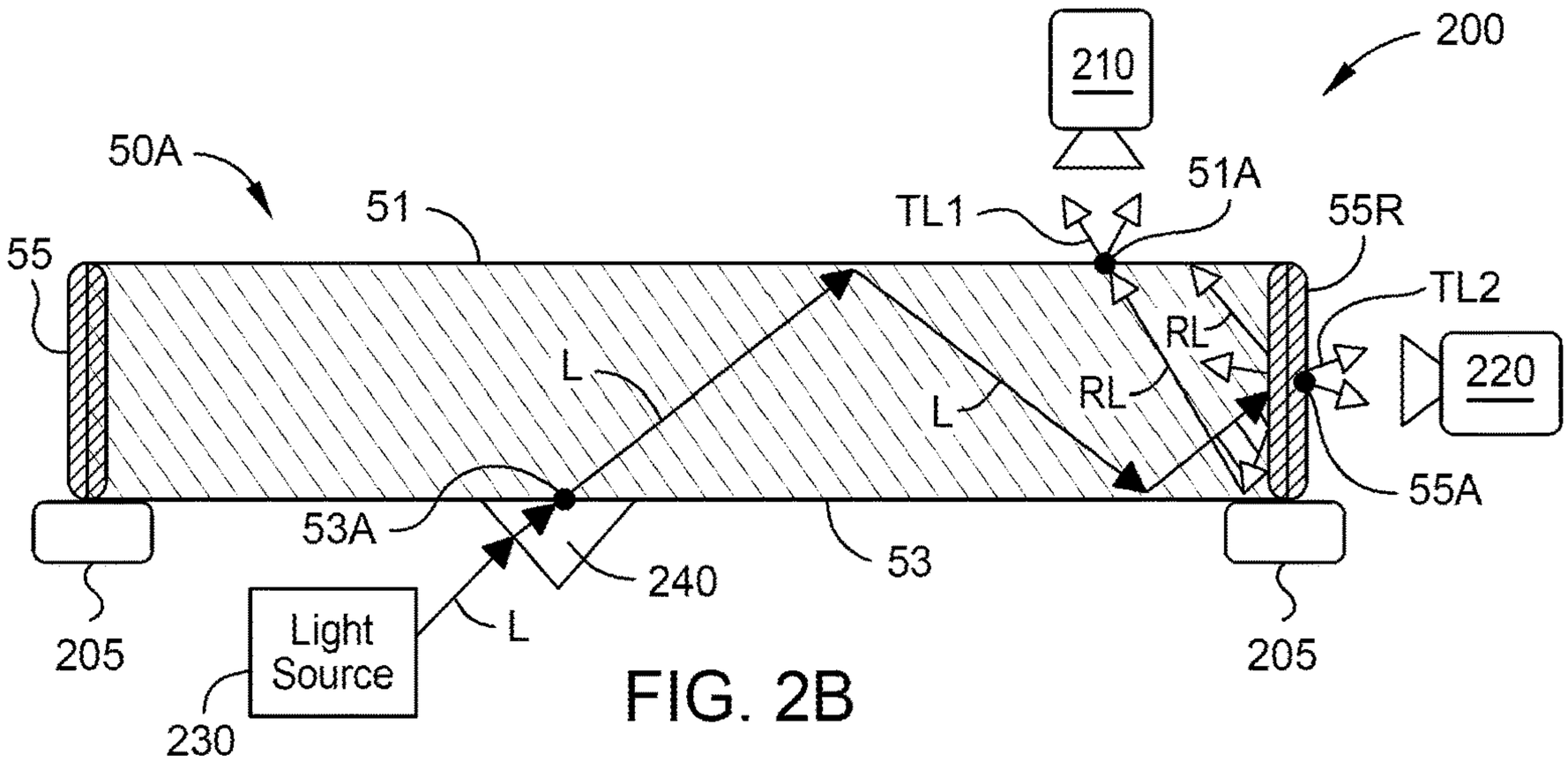

FIG. 2B

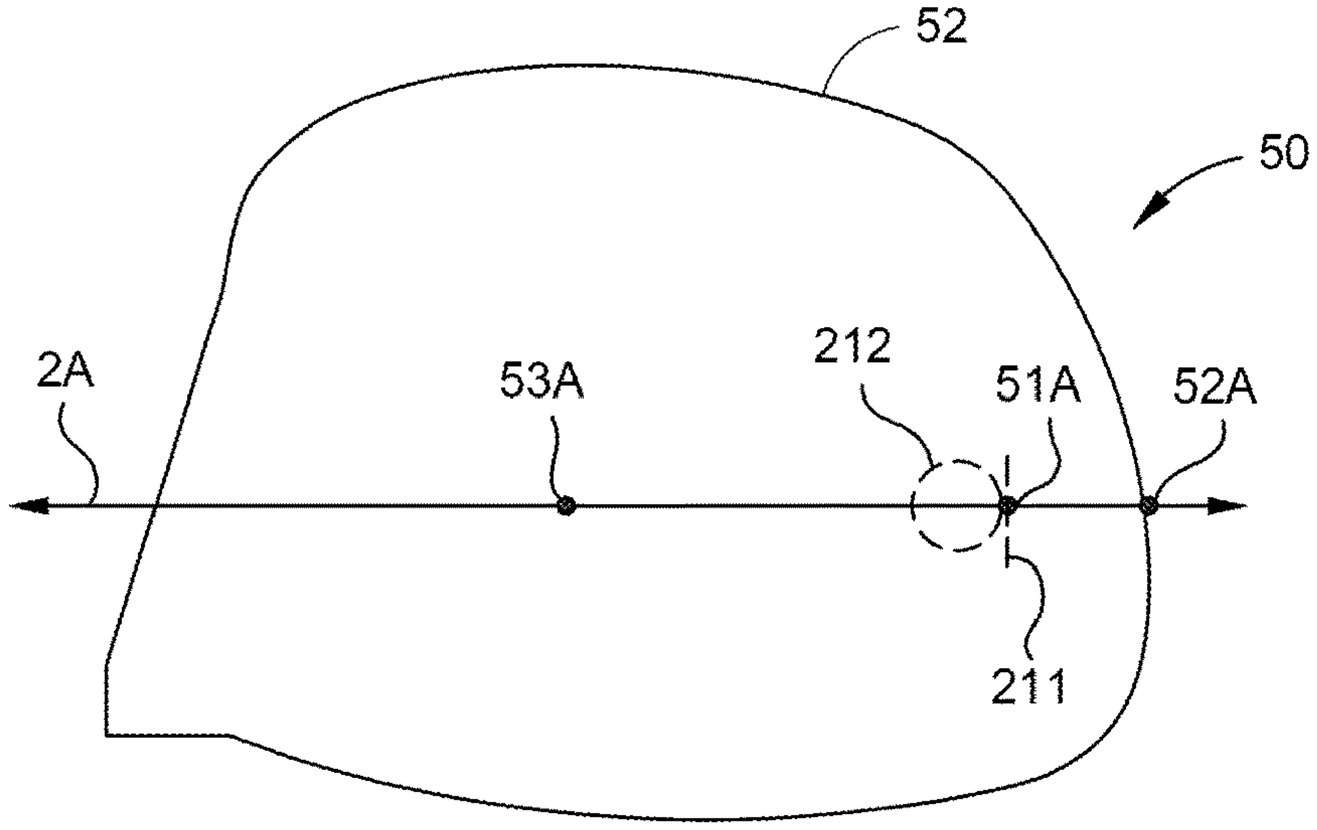

FIG. 2C

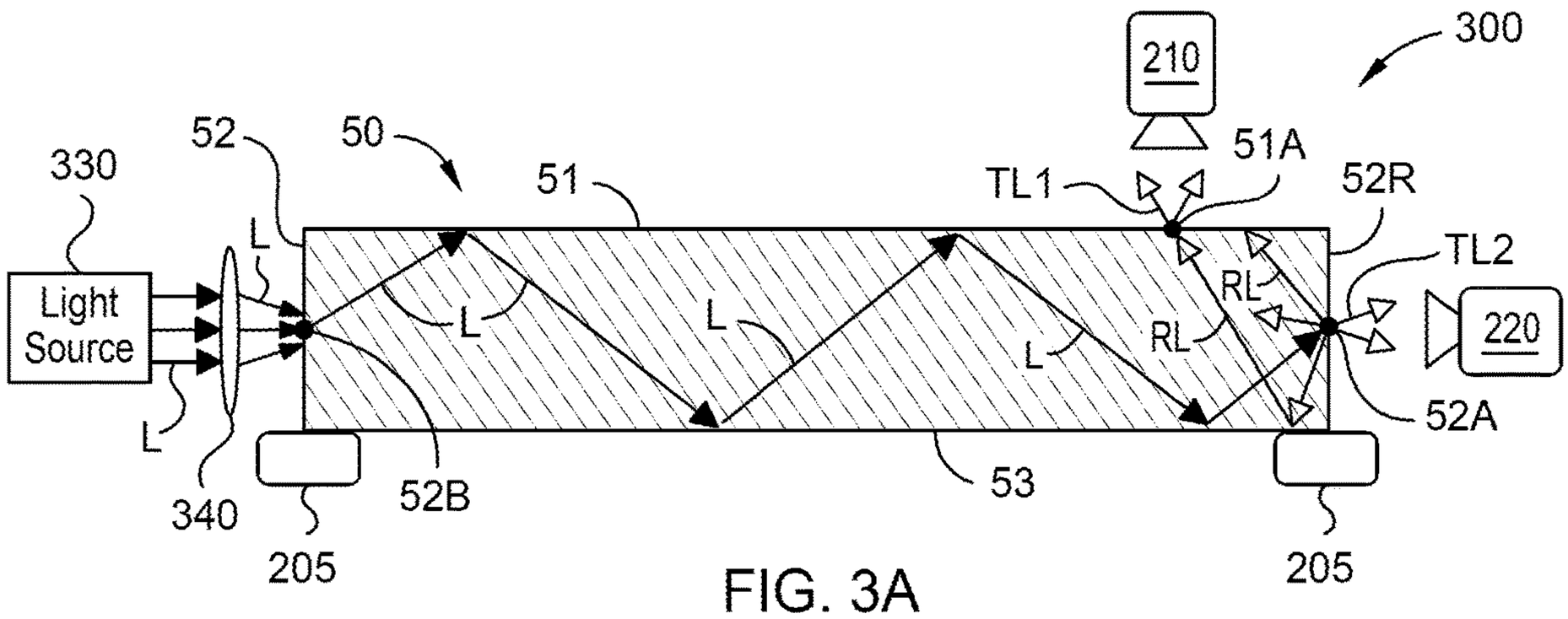

FIG. 3A

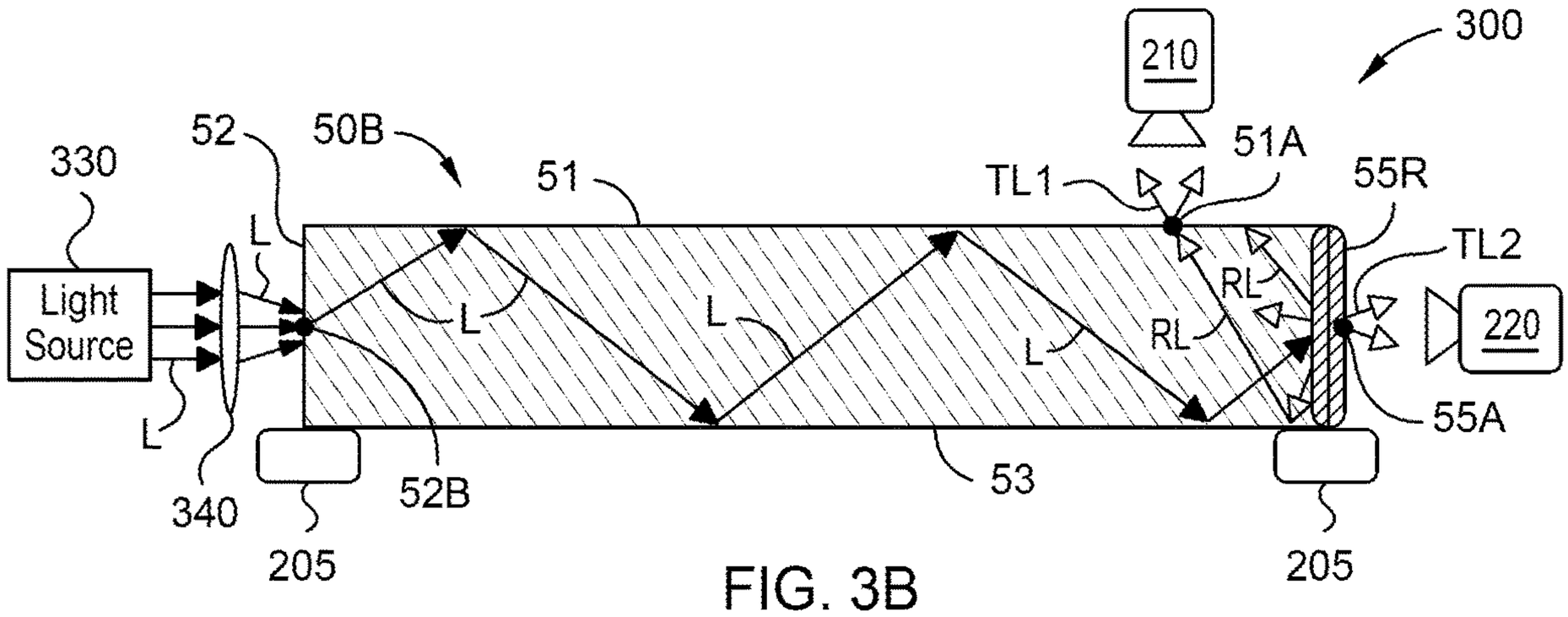

FIG. 3B

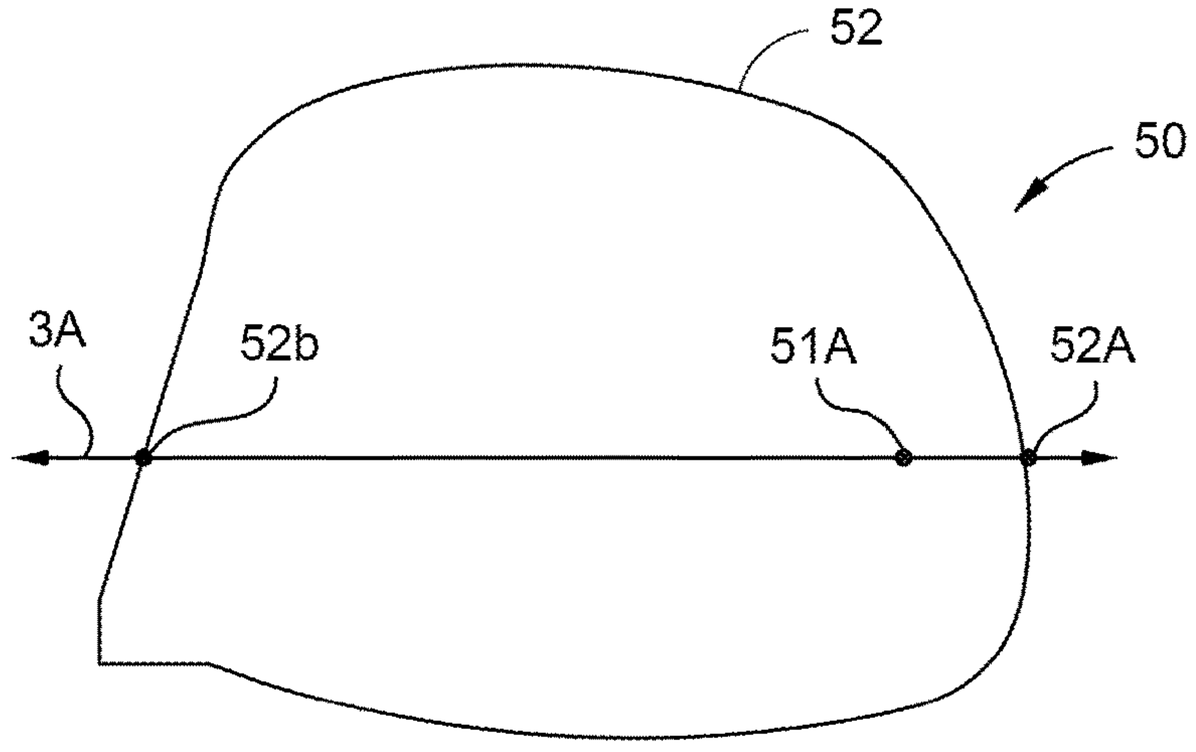

FIG. 3C

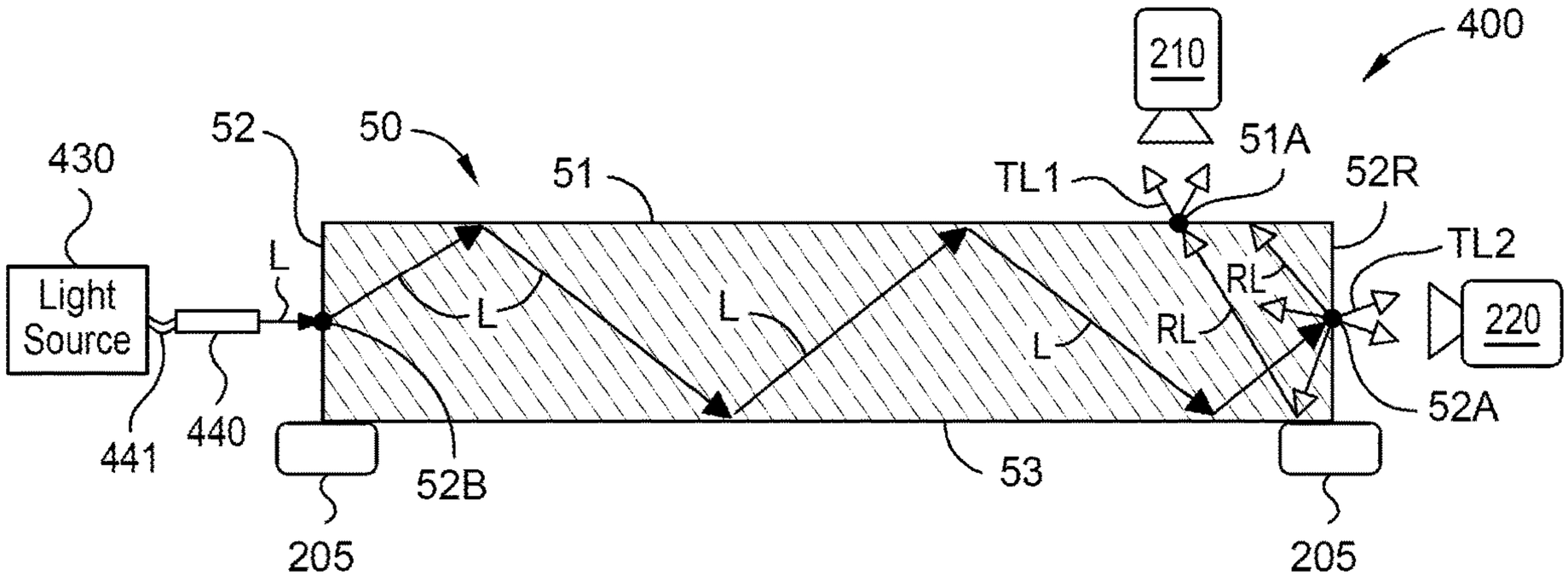
400
210
52
50
51
51A
TL1
52R
430
TL2
220
L
L
L
L
RL
RL
Light Source
441
440
52B
53
52A
205
205

FIG. 4A

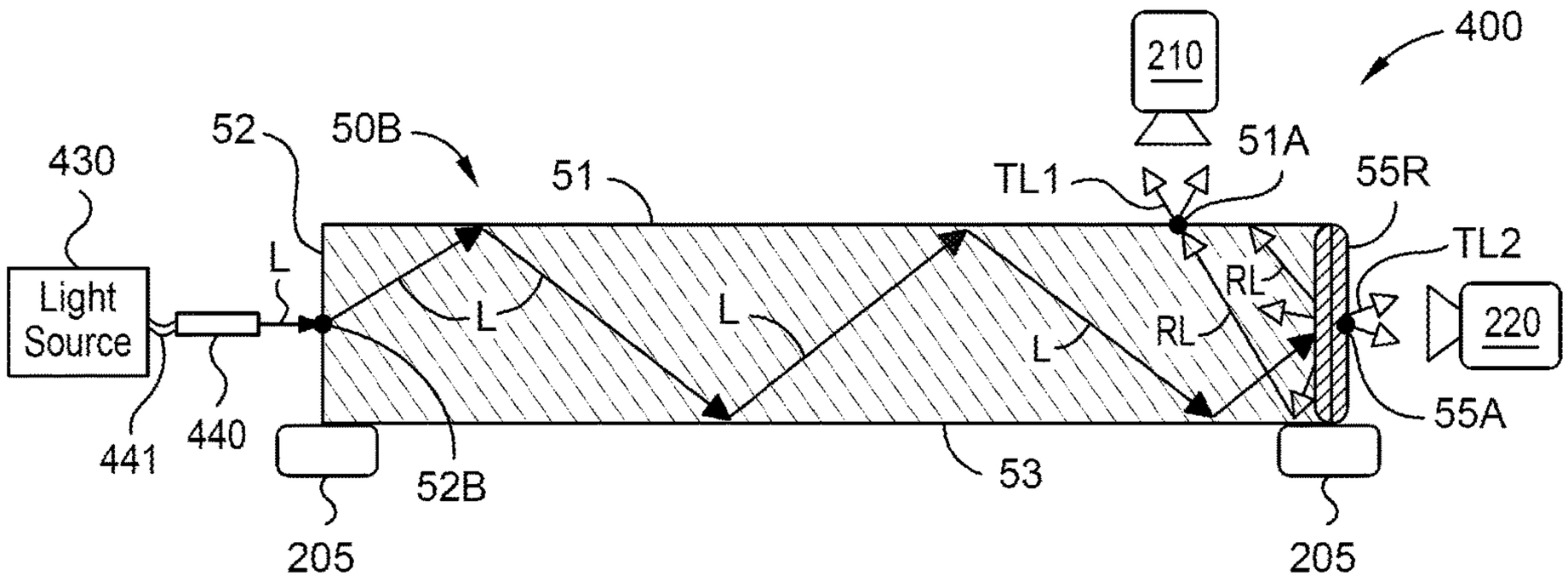
400
210
52
50B
51
51A
TL1
55R
430
TL2
220
L
L
L
L
RL
RL
Light Source
441
440
52B
53
55A
205
205

FIG. 4B

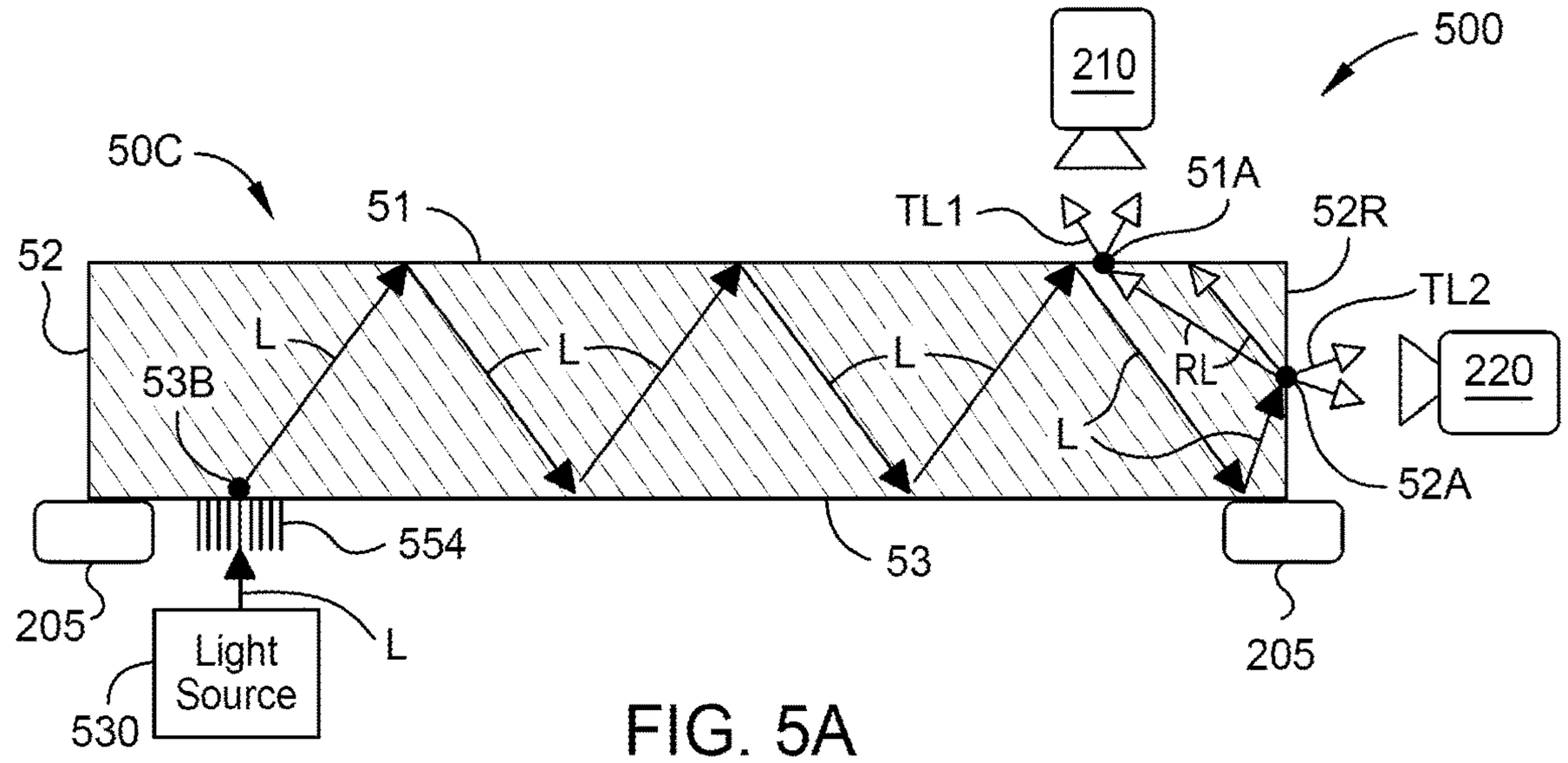

FIG. 5A

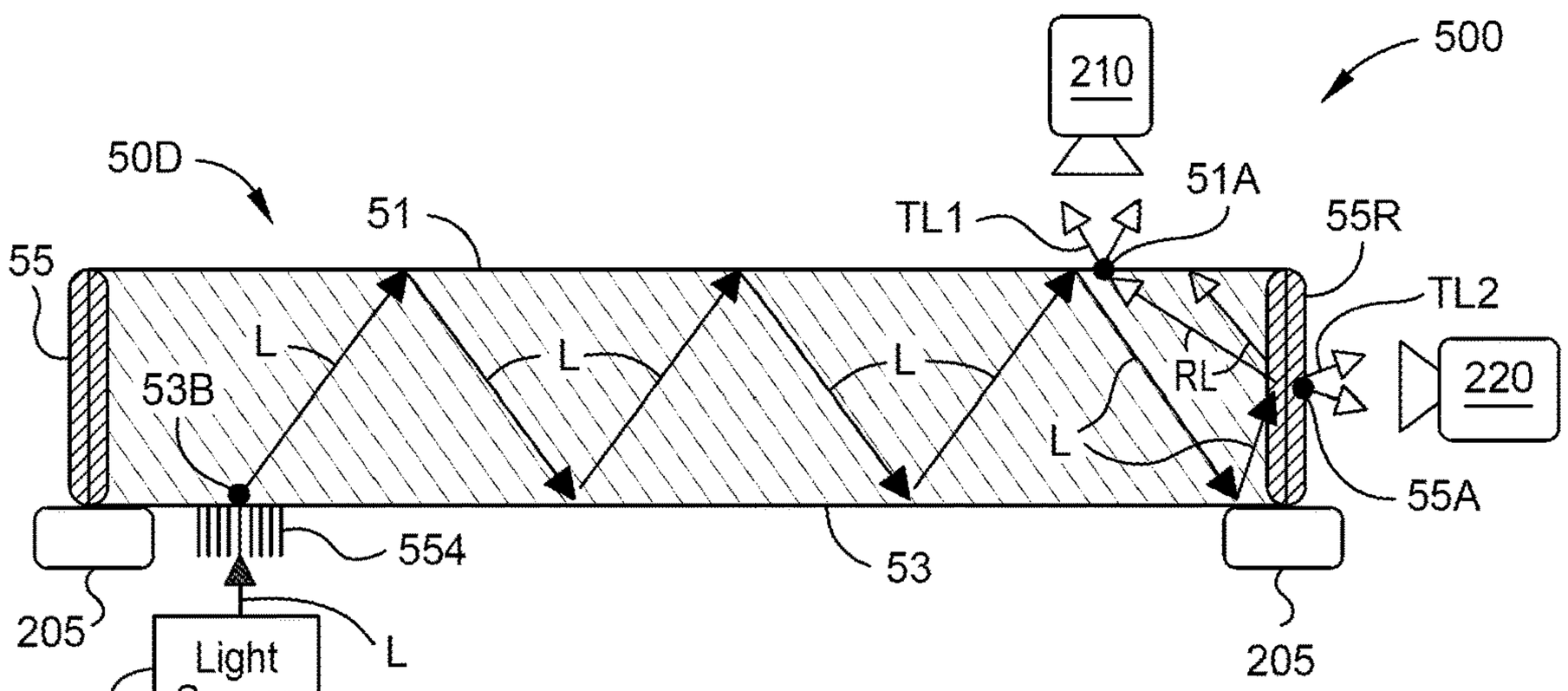

FIG. 5B

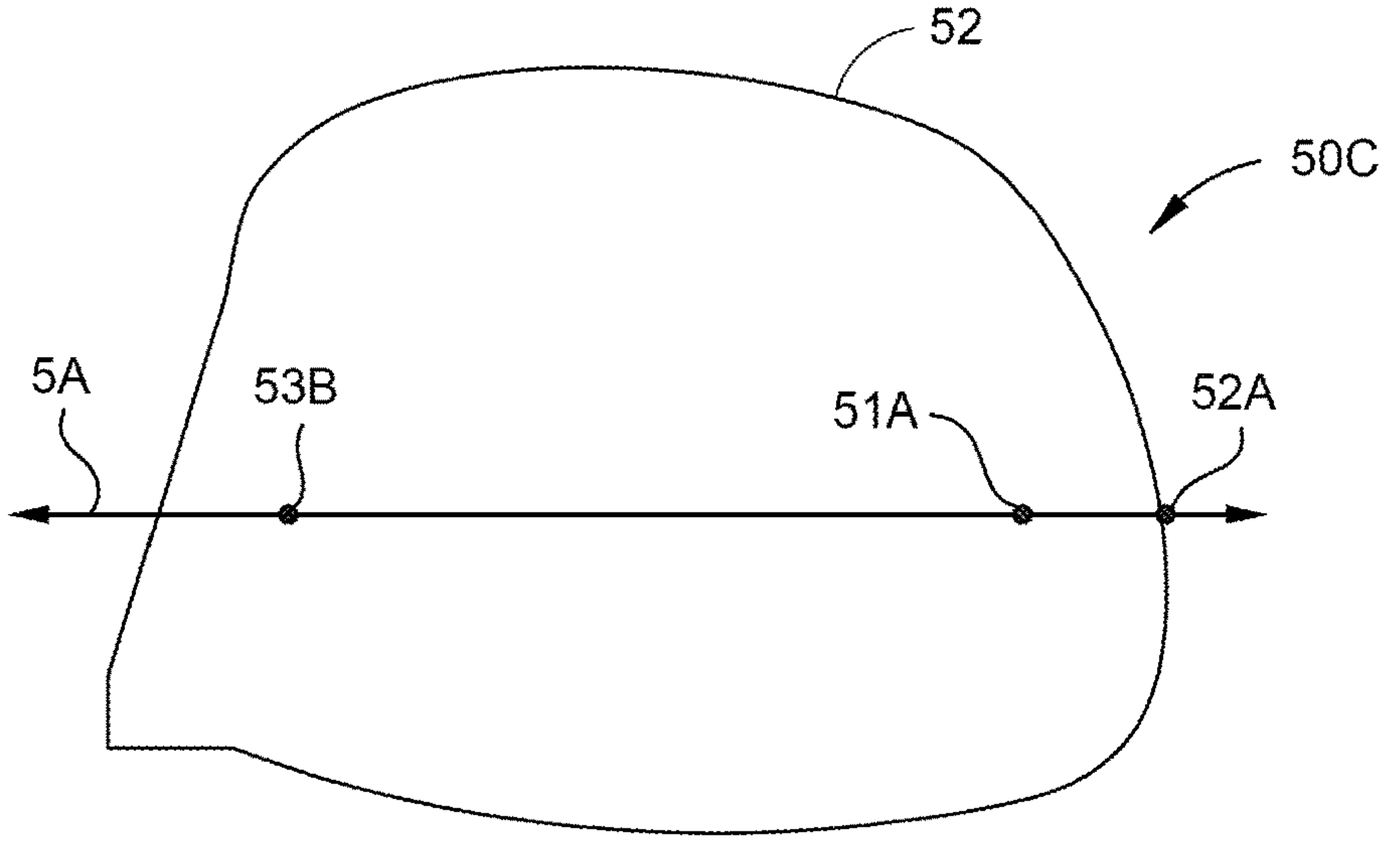

FIG. 5C

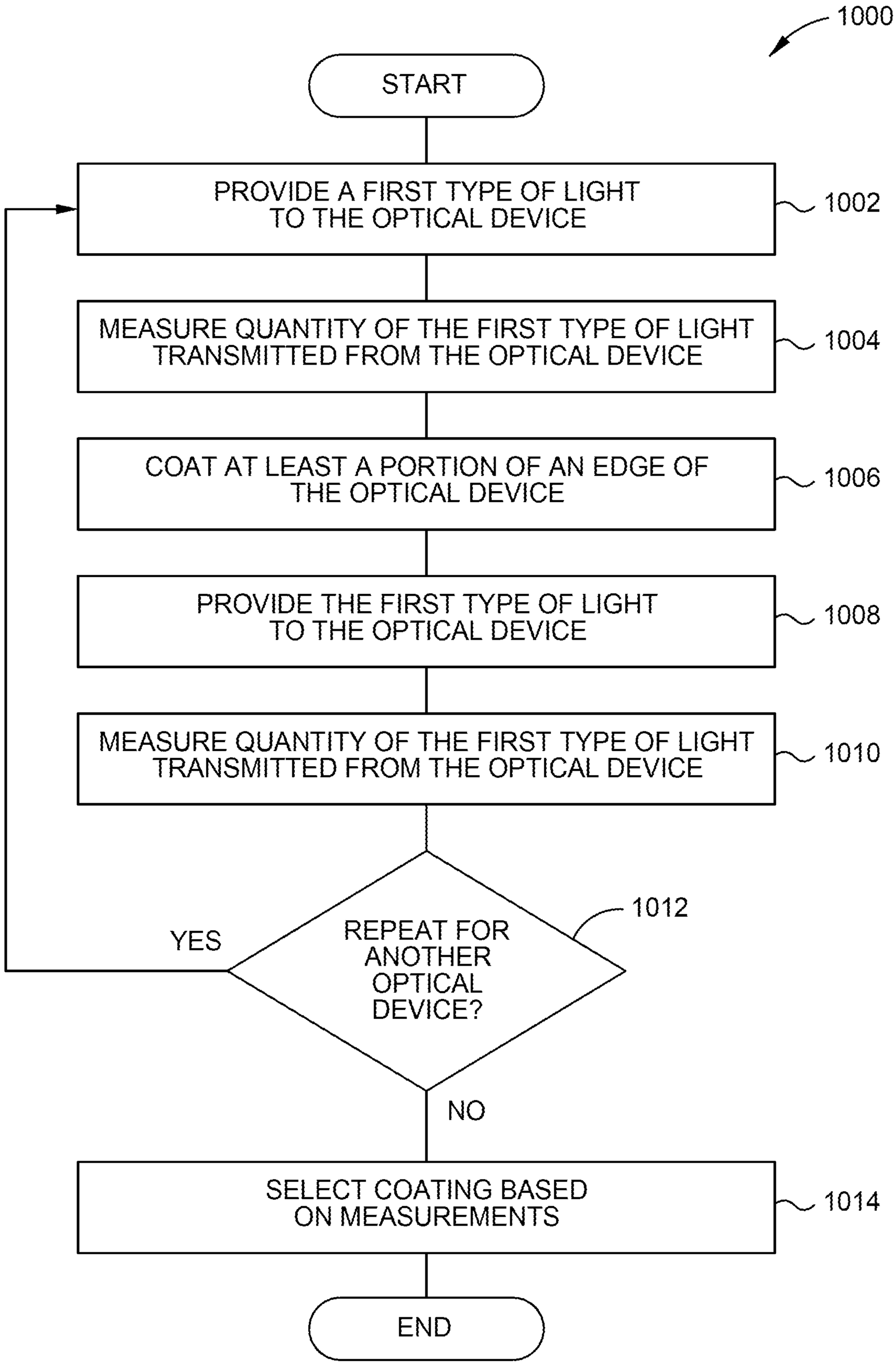
1000
START
PROVIDE A FIRST TYPE OF LIGHT TO THE OPTICAL DEVICE
1002
MEASURE QUANTITY OF THE FIRST TYPE OF LIGHT TRANSMITTED FROM THE OPTICAL DEVICE
1004
COAT AT LEAST A PORTION OF AN EDGE OF THE OPTICAL DEVICE
1006
PROVIDE THE FIRST TYPE OF LIGHT TO THE OPTICAL DEVICE
1008
MEASURE QUANTITY OF THE FIRST TYPE OF LIGHT TRANSMITTED FROM THE OPTICAL DEVICE
1010
REPEAT FOR ANOTHER OPTICAL DEVICE?
1012
YES
NO
SELECT COATING BASED ON MEASUREMENTS
1014
END

FIG. 6

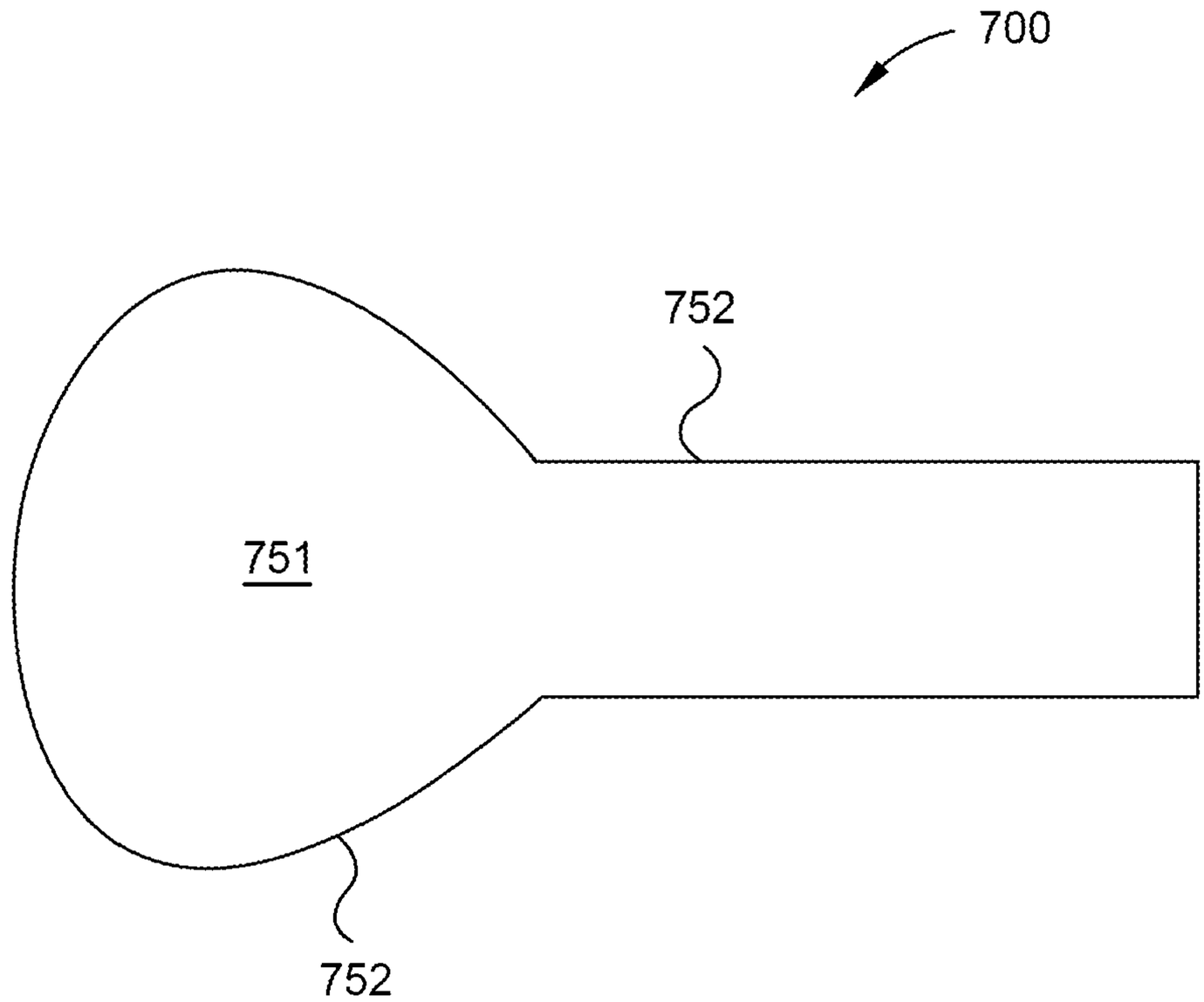

FIG. 7

OPTICAL DEVICE METROLOGY SYSTEMS AND RELATED METHODS

CROSS-REFERENCE TO RELATED APPLICATIONS

[0001] This application claims benefit of U.S. provisional patent application Ser. No. 63/117,585, filed Nov. 24, 2020, which is hereby incorporated herein by reference.

BACKGROUND

Field

[0002] Embodiments of the present disclosure generally relate to optical devices for augmented, virtual, and mixed reality. More specifically, embodiments described herein provide for optical device metrology systems and methods of performing optical device metrology.

Description of the Related Art

[0003] Virtual reality is generally considered to be a computer-generated simulated environment in which a user has an apparent physical presence. A virtual reality experience can be generated in 3D and viewed with a head-mounted display (HMD), such as glasses or other wearable display devices that have near-eye display panels as lenses to display a virtual reality environment that replaces an actual environment.

[0004] Augmented reality, however, enables an experience in which a user can still see through the display lenses of the glasses or other HMD device to view the surrounding environment, yet also see images of virtual objects that are generated for display and appear as part of the environment. Augmented reality can include any type of input, such as audio and haptic inputs, as well as virtual images, graphics, and video that enhances or augments the environment that the user experiences. As an emerging technology, there are many challenges and design constraints with augmented reality.

[0005] Augmented reality devices use optical devices (e.g., waveguide combiners) to generate virtual images for the user. One such challenge is displaying a virtual image overlaid on an ambient environment. To overlay these virtual images, light generated by the device (e.g., HMD) is in-coupled into a waveguide combiner, propagated through the waveguide combiner, out-coupled from the waveguide combiner, and overlaid for the user to appear as though the virtual image is part of the ambient environment. Light is coupled into and out of waveguide combiners using surface relief gratings.

[0006] Often, light to be used for generating the virtual images strays from the intended path inside an optical device, such as waveguide combiner. For example, instead of propagating out of the outcoupling grating of a waveguide combiner, some light may propagate until reaching an edge of the optical device. This light may then transmit through the edge of the optical device or reflect back into the device resulting of a scattering of light at a variety of angles in the optical device. This light that transmits through the edge and the light that scatters inside the optical device can reduce the image quality seen by the user optical device. To reduce the negative effects of this light on the image quality, edges of the optical device can be coated (e.g., blackened) with an optically absorbent material. Conventional techniques have then analyzed the quality of images output by the optical device to determine which coatings are most effective, but this is challenging and does not always lead to selecting the best coating.

[0007] Accordingly, what is needed in the art methods and optical device metrology systems operable to measure the effectiveness of optically absorbent coatings applied to the edges of optical devices for reducing the transmission of undesired light.

SUMMARY

[0008] In one embodiment, a method a method of optical device metrology is provided. The method includes providing a first type of light into a first optical device during a first time period, the first optical device comprising a top surface, a bottom surface, and one or more edges connecting the top surface with the bottom surface; measuring a quantity of the first type of light transmitted from a first location on the top surface or the bottom surface during the first time period; coating at least a portion of an edge of the one or more edges with a first coating of optically absorbent material during a second time period that occurs after the first time period; providing the first type of light into the first optical device during a third time period that occurs after the second time period; and measuring a quantity of the first type of light transmitted from the first location on the top surface or the bottom surface during the third time period.

[0009] In another embodiment, a method of a method of optical device metrology is provided. The method includes a) providing a first type of light into a first optical device during a first time period, the first optical device comprising a top surface, a bottom surface, and one or more edges connecting the top surface with the bottom surface; b) measuring, by a first camera, a quantity of the first type of light transmitted from a first location on the top surface or the bottom surface during the first time period; c) coating at least a portion of an edge of the one or more edges with a first coating of optically absorbent material during a second time period that occurs after the first time period; d) providing the first type of light into the first optical device during a third time period that occurs after the second time period; and e) measuring, by the first camera, a quantity of the first type of light transmitted from the first location on the top surface or the bottom surface during the third time period.

[0010] In another embodiment, a method of optical device metrology is provided. The method includes a) providing a first type of light into a first optical device during a first time period, the first optical device comprising a top surface, a bottom surface, and one or more edges connecting the top surface with the bottom surface; b) measuring, by a first camera, a quantity of the first type of light transmitted from a first location on the top surface or the bottom surface during the first time period; c) measuring, by a second camera, a quantity of the first type of light transmitted from a first location on an edge of the one or more edges during the first time period; d) coating at least a portion of an edge of the one or more edges with a first coating of optically absorbent material during a second time period that occurs after the first time period; e) providing the first type of light into the first optical device during a third time period that occurs after the second time period; f) measuring, by the first camera, a quantity of the first type of light transmitted from the first location on the top surface or the bottom surface

during the third time period g) measuring, by the second camera, a quantity of the first type of light transmitted from the first location on the edge of the one or more edges during the third time period; and h) determining the first coating or the second coating is better suited for absorbing light based on the measurements made during blocks b), c), f), and g) for the first optical device and the second optical device, wherein the measurements made by the first camera are weighted more heavily than the measurements made by the second camera for determining which coating is better suited.

BRIEF DESCRIPTION OF THE DRAWINGS

[0011] So that the manner in which the above recited features of the present disclosure can be understood in detail, a more particular description of the disclosure, briefly summarized above, may be had by reference to embodiments, some of which are illustrated in the appended drawings. It is to be noted, however, that the appended drawings illustrate only exemplary embodiments and are therefore not to be considered limiting of its scope, and may admit to other equally effective embodiments.

[0012] FIG. **1**A is a perspective, frontal view of an optical device, according to one embodiment.

[0013] FIG. **1**B is a perspective, frontal view of an edge-coated optical device, according to one embodiment.

[0014] FIGS. **2**A and **2**B are schematic views of a metrology system, according to one embodiment.

[0015] FIG. **2**C is a top view of an optical device showing locations on the optical device discussed above in reference to FIGS. **2**A and **2**B.

[0016] FIGS. **3**A and **3**B are schematic views of a metrology system, according to another embodiment.

[0017] FIG. **3**C is a top view of an optical device showing locations on the optical device discussed above in reference to FIGS. **3**A and **3**B.

[0018] FIGS. **4**A and **4**B are schematic views of a metrology system, according to another embodiment.

[0019] FIGS. **5**A and **5**B are schematic views of a metrology system, according to another embodiment.

[0020] FIG. **5**C is a top view of an optical device showing locations on the optical device discussed above in reference to FIGS. **5**A and **5**B.

[0021] FIG. **6** is a process flow diagram of a method for measuring light transmitted from an optical device, according to one embodiment.

[0022] FIG. **7** is a top view of a cut-out section of the optical device from FIG. **1**A, according to one embodiment.

[0023] To facilitate understanding, identical reference numerals have been used, where possible, to designate identical elements that are common to the figures. It is contemplated that elements and features of one embodiment may be beneficially incorporated in other embodiments without further recitation.

DETAILED DESCRIPTION

[0024] Embodiments of the present disclosure generally relate to optical devices for augmented, virtual, and mixed reality. More specifically, embodiments described herein provide for methods and optical device metrology systems operable to measure the effectiveness of optically absorbent coatings applied to the edges of optical devices for reducing the transmission of undesired light. Used herein, light refers to the portion of the electromagnetic spectrum that is visible to humans. The optical devices to which the benefits of this disclosure apply include, but are not limited to, a waveguide combiner (e.g., an augmented reality waveguide combiner), a flat optical device (e.g., a metasurface), a surface relief grating-based waveguide combiner, a volume hologram-based waveguide combiner, a bird bath waveguide combiner, a partial reflective mirror array combiner, or a free from optics combiner. Furthermore, the use of the term coating is not meant to be limited as the benefits of this disclosure can apply to any technique used to block and/or absorb light at the edges of optical devices. For example, the benefits of this disclosure can apply to any material (e.g., a stain, an opaque piece of tape, etc.) added on or around the edges of the optical device.

[0025] FIG. **1**A is a perspective, frontal view of an optical device **50**, according to one embodiment. The optical device **50** as depicted is a waveguide combiner. It is to be understood that the optical device **50** described herein is an exemplary optical device and other optical devices may benefit the advantages provided from this disclosure. The optical device **50** can include a plurality of optical device structures formed on a substrate **56**. The substrate **56** can be a transparent substrate. The optical device structures may be nanostructures having sub-micron dimensions, e.g., nano-sized dimensions. In the optical device **50**, these optical device structures include a plurality of gratings **54**. These gratings **54** can include a first grating **54***a*, a second grating **54***b*, and a third grating **54***c*.

[0026] The first grating **54***a* can be an input coupling grating for the optical device **50**. The second grating **54***b* can be an intermediate grating for the optical device **50**. The third grating **54***c* can be an output coupling grating for the optical device **50**. Other optical devices that can benefit from this disclosure can include a variety of optical device structures, and these optical device structures may be angled or binary. Furthermore, these optical device structures may have other cross-sections including, but not limited to, circular, triangular, elliptical, regular polygonal, irregular polygonal, and/or irregular shaped cross-sections.

[0027] The optical device **50** can be used for augmented reality applications. During use of the optical device **50** in a finished product, incoming light for an augmented reality (AR) image is provided to the first grating **54***a*. The light for the AR image is then propagated from the first grating **54***a* to the second grating **54***b*. Subsequently, the light for the AR image is propagated from the second grating **54***b* to the third grating **54***c* after which the light for the AR image can be output from the third grating **54***c* for the user to see.

[0028] Some light provided to optical devices (e.g., optical device **50**) strays from the intended path inside the device. For example, light provided to the optical device **50** is generally intended be transmitted along a path from the input coupling grating **54***a*, through the intermediate grating **54***b*, and to the output coupling grating **54***c* without reaching the edges **52** of the optical device **50**. However, in some instances a fraction of light reaches the edges **52** of the optical device **50**.

[0029] Upon reaching the edge **52**, portions of the light can then be (1) transmitted through the edge **52**, (2) reflected back through the interior of the optical device **50** at a variety of angles, or (3) absorbed at the edge **52**. The light that transmits through the edge **52** and the light that reflects back

from the edge **52** both reduce the quality of images generated by the optical device **50**.

[0030] To reduce the amount of light transmitted through the edges **52** and the amount of light reflected back into the optical device **50** by the edges **52**, the edges **52** of the optical device **50** can be coated with a coating of optically absorbent material. FIG. **1**B is a perspective, frontal view of an edge-coated optical device **50**A (also referred to as coated waveguide combiner), according to one embodiment. The optical device **50**A of FIG. **1**B is the same as the optical device **50** of FIG. **1**A except that the edge **52** from the optical device **50** of FIG. **1**A has been coated (e.g., blackened) to form the coated edge **55**. The coated edge **55** can reduce the amount of light that is transmitted through the coated edge **55** compared to the uncoated edge **52**.

[0031] Furthermore, the coated edge **55** can reduce the amount of light that is reflected back from the coated edge **55** compared to the uncoated edge **55**. Although coated edges, such as the coated edge **55**, can improve the image quality output from a waveguide combiner, there can be variability of the effectiveness of the different coatings used for the coated edge. Consequently, it can be challenging to determine which coating should be used for which optical device. Conventional methods have generally focused on analyzing the quality of images or other light intended to be output by the optical devices. For example, for a waveguide combiner the quality of the image output by the output coupling grating **54***c* has conventionally been analyzed when comparing the performance of different optically absorbent coatings, but there are numerous variables that can affect the quality of the image provided by the output coupling grating **54***c*. In response to these problems, the following systems and methods are proposed.

[0032] FIGS. **2**A and **2**B are schematic views of a metrology system **200**, according to one embodiment. The metrology system **200** is operable to provide light to an optical device (e.g., optical device **50**) and to take measurements of light transmitted from the optical device. A side cross-sectional view of the uncoated optical device **50** (see also FIG. **1**A) is shown in FIG. **2**A. A side cross-sectional view of the edge-coated optical device **50**A (see also FIG. **1**B) is shown in FIG. **2**B.

[0033] The metrology system **200** includes a support **205**, a first camera **210**, a second camera **220**, a light source **230**, and a prism **240**. The optical device **50** includes the edges **52**, a bottom surface **53** and a top surface **51**. The edges **52** connect the top surface **51** with the bottom surface **53**. The bottom surface **53** of the optical device **50** can be positioned on the support **205**. The support **205** can have a shape (e.g., a ring shape) that is similar to the perimeter of the optical device **50**, so that most of the bottom surface **53** of the optical device **50** is exposed to allow for providing light into the optical device **50** or for taking measurements of light transmitting from the bottom surface **53** of the optical device **50**. In other embodiments, a transparent support can be used to support an optical device, such as the optical device **50**.

[0034] The first camera **210** is directed at a location **51**A on a top surface **51** of the optical device **50**. The second camera **220** is directed at a location **52**A on a right edge **52**R of the optical device **50**. The location **51**A, **52**A can be located away from locations where the optical device is designed to output light. For example, the location **51**A on the top surface **51** can be located away from the output coupling grating **54***c* (see FIG. **1**A) for the optical device **50**. The optical device **50** is not designed to transmit light through the edge **52**. For optical devices designed to transmit light through the edge, the location at which the second camera **220** is directed would be located away from the location(s) on the edge where the optical device is designed to transmit light.

[0035] Light L (e.g., blue light) is transmitted from the light source **230**. In the following description, the light L provided by the light source **230** is described separately from reflected/scattered light and light transmitting from the optical device **50**. To aid this description the light L is identified in the Figures with a filled-in black arrowhead while the reflected/scattered light RL and the transmitted light TL**1**, TL**2** are identified in the Figures with an unfilled arrowhead.

[0036] Light L is transmitted from the light source **230** to the prism **240**. The prism **240** is positioned against the bottom surface **53** and is centered around a location **53**A on the bottom surface **53**. In one embodiment, the light source **230** is a laser. In one of these embodiments, the light source **230** is a blue laser due to the increased amount of light scattering associated with blue light. In other embodiments, the light source **230** is operable to provide different wavelengths of light at separate times (e.g., blue light only, followed by red light only) or simultaneously (e.g., blue light and red light at the same time). The cameras **210**, **220** can then take measurements for each type of light provided by the light source **230**.

[0037] The prism **240** is used to couple the light L from the light source **230** into the interior of the optical device **50**. Inside the optical device **50**, the light L undergoes total internal reflection until the light L reaches the right edge **52**R. Upon reaching the right edge **52**R, some of the light L transmits through the right edge **52**R towards the second camera **220** as transmitted light TL**2**. The second camera **220** can take measurements of this transmitted light TL**2**.

[0038] Other portions of the light L are reflected back through the interior of the optical device **50** as reflected light RL. This reflected light RL can be scattered at a variety of angles through the interior of the optical device **50**. Then different portions of this scattered, reflected light RL then encounter different surfaces of the optical device **50** at a variety of locations, such as the location **51**A on the top surface **51** of the optical device **50**. After encountering a location on the one of the surfaces (e.g., location **51**A on the top surface **51**), the reflected light RL then either reflects again or transmits away from the optical device **50** as transmitted light TL**1**. For example, FIG. **2**A shows some of the transmitted light TL**1** transmitting towards the first camera **210**. The first camera **210** can take measurements of this transmitted light TL**1** that transmits from the top surface **51** at and around the location **51**A (i.e., within the field of view of the first camera **210**).

[0039] In some embodiments, the location **51**A is a location other than a location on the optical device **50** where light is designed to be output. For example, the optical device **50** includes the output coupling grating **54**C (see FIG. **1**A), which is a location designed to output light. Thus, in an embodiment in which the output coupling grating **54***c* is the only location on the optical device **50** designed to output light, then the location **51**A is a location positioned away from the output coupling grating **54***c*, so that the light measured by the camera **210** is not the light that the optical device **50** is designed to output.

[0040] The shape of the edge **52** can also have an effect on the reflecting and scattering of light back through the interior of the optical device **50**. For example, a rounded edge may reflect more or less light than a straight edge. Additionally, a rounded edge may reflect light to different locations in the interior of an optical device (e.g., optical device **50**) than a straight edge. A jagged edge may cause more scattering than a straight edge or a rounded edge. In some embodiments, an edge of an optical device (e.g., edge **52** of optical device **50**) is modified to make the edge more jagged or rough to increase the scattering of light back through the interior of the optical device. Increased scattering of light can help amplify how the different optically absorbent coatings can have different effects on reducing the transmission of light through undesired portions of an optical device, such as the locations **51**A, **52**A shown in FIG. **2**A.

[0041] The optical device **50**A of FIG. **2**B is the same as the optical device **50** of FIG. **2**A except that the edge **52** from the optical device **50** of FIG. **2**A has been coated to form the coated edge **55**. The coated edge **55** can reduce the amount of light that is transmitted through the coated edge **55** compared to the uncoated edge **52** when a same amount of light is incident upon both of the edges the **52**, **55** from the interior of the respective optical devices **50**, **50**A. For example, when the light source **230** provides an identical amount of light L to the optical devices **50**, **50**A, then the second camera **220** measures less transmitted light TL**2** when the edge-coated optical device **50**A is on the support **205** receiving the light L than when the uncoated optical device **50** is on the support **205** receiving the same amount of light L due to the coated edge **55** absorbing and otherwise blocking the light L from transmitting from the edge as the transmitted light TL**2**.

[0042] Furthermore, the coated edge **55** can also reduce the amount of light L that is reflected back from the coated edge **55** compared to the uncoated edge **55** when an identical amount of light L is incident upon both of the edges **52**, **55** from the interior of the respective optical devices **50**, **50**A. For example, when the light source **230** provides an identical amount of light L to the optical devices **50**, **50**A, then the first camera **210** measures less transmitted light TL**1** when the edge-coated optical device **50**A is on the support **205** receiving the light L than when the optical device **50** is on the support **205** receiving the same amount of light L due to the coated edge **55** absorbing and otherwise blocking the light L from reflecting and later transmitting as the transmitted light TL**1**.

[0043] FIG. **2**C is a top view of the optical device **50** showing locations on the optical device **50** discussed above in reference to FIGS. **2**A and **2**B. FIG. **2**C includes a reference line **2**A showing the location at which the cross-sectional view is taken for FIG. **2**A. The same view along reference line **2**A is used for the cross-sectional view of FIG. **2**B after the coated edges **55** are formed. FIG. **2**C shows the top-view location for (1) the location **53**A on the bottom surface **53** for where the light L enters the optical device **50**, (2) the location **51**A on the top surface **51** for where the transmitted light TL**1** transmits towards the first camera **210**, and (3) the location **52**A on the right edge **52**R for where the transmitted light TL**2** transmits towards the second camera **220**.

[0044] Also shown in FIG. **2**C are a straight-line path **211** and a circular path **212**. These paths **211**, **212** can correspond to paths over which the first camera **210** can move or otherwise separately view when taking measurements of light transmitted from the top surface **51**. The first camera **210** can be operable to take numerous measurements along the paths **211**, **212** (e.g., ten or more, hundred or more, etc.). Taking measurements from more than one location (e.g., location **51**A) can be used to obtain more data, which may be helpful in determining the relative effectiveness of different coatings applied to the optical devices, such as the optical device **50**. In some embodiments, the second camera **220** is also operable to view different locations on the edge **52** of the optical device **50**. Although a straight-line path **211** and a circular path **212** are shown, paths having any other shape including irregular shapes can also be used. Furthermore, measurements by the cameras (e.g., first camera **210**) can also be further away from each other than shown on the paths **211**, **212**.

[0045] FIGS. **3**A and **3**B are schematic views of a metrology system **300**, according to another embodiment. The metrology system **300** is the same as the metrology system **200** (see FIGS. **2**A, **2**B) described above except that the metrology system **300** includes different equipment for providing the light L into the optical device **50** through the edge **52** rather than providing the light L through the bottom surface **53** of the optical device **50** as described above in reference to the metrology system **200**.

[0046] In FIG. **3**A, the optical device **50** described above in reference to FIGS. **1**A and **2**A is again shown on the support **205**. In FIG. **3**B, a coated optical device **50**B is shown on the support **205**. The coated optical device **50**B is the same as the coated optical device **50**A (see FIG. **1**B, **2**B) described above except that at least a portion of the edge **52** of the optical device **50**B remains uncoated. This uncoated portion can include a location **52**B on an edge **52** where the light L is provided into the optical device **50**B.

[0047] The metrology system **300** includes a light source **330** and a lens **340**. In some embodiments, the light source **330** is the same as the light source **230** discussed above. The lens **340** is used to focus the light L from the light source **330** onto the uncoated location **52**B on the edge **52** of the optical device **50**. After the light L enters the respective optical devices **50**, **50**A, the light L undergoes total internal reflection until the light L reaches the right edge **52**R (FIG. **3**A), **55**R (FIG. **3**B). After the light L reaches the respective edges, the first camera **210** and the second camera **220** can make the same measurements of the corresponding transmitted light TL**1**, TL**2** both before coating the edges **52** (see FIG. **3**A) and after coating the edges (e.g., edge **55**R)(see FIG. **3**B).

[0048] FIG. **3**C is a top view of the optical device **50** showing locations on the optical device **50** described above in reference to FIGS. **3**A and **3**B. FIG. **3**C includes a reference line **3**A showing the location where the cross-sectional view is taken for FIG. **3**A. The same view along reference line **3**A is used for the cross-sectional view of FIG. **3**B after the coated edges **55** are formed. FIG. **3**C shows the top-view location for (1) the location **52**B on the edge **52** for where the light L enters the optical device **50**, (2) the location **51**A on the top surface **51** for where the transmitted light TL**1** transmits towards the first camera **210**, and (3) the location **52**A on the right edge **52**R for where the transmitted light TL**2** transmits towards the second camera **220**.

[0049] FIGS. **4**A and **4**B are schematic views of a metrology system **400**, according to another embodiment. The metrology system **400** is the same as the metrology system

300 (see FIGS. 3A, 3B) described above except that the metrology system 400 includes different equipment for providing the light L into the optical device 50 through the edge 52. The same optical devices 50, 50B are shown on the support 205 in the respective FIGS. 4A, 4B as were shown in FIGS. 3A, 3B. As described above, the optical device 50B includes an uncoated portion for the location 52B on the edge 52 where the light L is provided into the optical device 50B.

[0050] The metrology system 400 includes a light source 430, a fiber optic head 440, and a cable 441 connecting the light source 430 with the fiber optic head 440. In some embodiments, the light source 430 is the same as the light sources 230, 330 described above.

[0051] A top view of the optical device 50 is not shown for the metrology system 400 as this would be the same view as shown in FIG. 3C due to the light L entering at the same location 52B and the transmitted light TL1, TL2 also being measured by the respective cameras 210, 220 at the same locations 51A, 52A in both metrology systems 300, 400.

[0052] FIGS. 5A and 5B are schematic views of a metrology system 500, according to another embodiment. The metrology system 500 is the same as the metrology system 200 (see FIGS. 2A, 2B) described above except that the metrology system 500 includes different equipment for providing the light L into the optical device 50 through the bottom surface 53 of the optical device 50.

[0053] In FIG. 5A, an optical device 50C is shown on the support 205. The optical device 50C is the same as the optical device 50 described above except that the optical device 50C includes a grating 554. The grating 554 can be an additional grating not included in the optical device 50 (see e.g., FIG. 1A) that included the gratings 54*a-c*. Alternatively, the grating 554 can be in a different position, but otherwise the same as one of the gratings 54*a-c* described above. The grating 554 can be used to couple light provided by the metrology system 500 into the optical device 50C. In FIG. 5B, an optical device 50D is shown on the support 205. The optical device 50D is the same as the optical device 50C except that the edge 52 of the optical device 50C has been coated for the optical device 50D to form the coated edge 55.

[0054] The metrology system 500 includes a light source 530 and the grating 554. In some embodiments, the light source 530 is the same as the light source 230 described above. The grating 554 is used to couple the light L from the light source 530 into the optical devices 50C, 50D. The grating 554 is centered around a location 53B on the bottom surface 53 of the optical devices 50C, 50D. After the light L enters the respective optical devices 50C, 50D, the light L undergoes total internal reflection until the light L reaches the right edge 52R (FIG. 5A), 55R (FIG. 5B). After the light L reaches the respective edges, the first camera 210 and the second camera 220 can make the same measurements of the corresponding transmitted light TL1, TL2 both before coating the edges 52 (see FIG. 5A) and after coating the edges 55 (see FIG. 5B).

[0055] FIG. 5C is a top view of the optical device 50C showing locations on the optical device 50C described above in reference to FIGS. 5A and 5B. FIG. 5C includes a reference line 5A showing the location where the cross-sectional view is taken for FIG. 5A. The same view along reference line 5A is used for the cross-sectional view of FIG. 5B after the coated edges 55 are formed. FIG. 5C shows the top-view location for (1) the location 53B on the bottom surface 53 for where the light L enters the optical device 50C, (2) the location 51A on the top surface 51 for where the transmitted light TL1 transmits towards the first camera 210, and (3) the location 52A on the right edge 52R for where the transmitted light TL2 transmits towards the second camera 220.

[0056] FIG. 6 is a process flow diagram of a method 1000 of performing optical device metrology, according to one embodiment. The method 1000 is described as being performed on the optical device 50 and similar optical devices, but the method can be applied to any optical device in which an edge is coated (e.g., blackened). As described above, the optical device 50 includes the top surface 51, the bottom surface 53, and one or more edges 52 connecting the top surface 51 with the bottom surface 53.

[0057] The method begins at block 1002. At block 1002, a first type of light can be provided into the optical device 50 from a light source during a first time period. For example, the first type of light can be blue light. With reference to FIG. 2A the first type of light can be provided into the optical device 50 from the light source 230 through the prism 240. With reference to FIG. 3A, the first type of light can be provided into the optical device 50 from the light source 330 through the lens 340. With reference to FIG. 4A, the first type of light can be provided into the optical device 50 from the light source 430 through the fiber optic head 440. With reference to FIG. 5A, the light can be provided into the optical device 50 from the light source 530 through the grating 554. In some embodiments, each of the light sources 230, 330, 430, 530 can be a light source operable to provide the first type of light, such as a blue laser. In other embodiments, the light sources can be operable to provide more than one type of light (e.g., blue light and red light) or multiple light sources can be used that can each provide a different type of light. In some of these embodiments, the different types of light can be provided separately (e.g., blue light only, followed by red light only) or simultaneously (e.g., blue light and red light at the same time. Multiple types of light can also be provided each time light is provided to an optical device, for example after the edges of the optical device are coated, so that the same type of measurements can be performed before and after edge coating as well as on optical devices that have different coatings.

[0058] At block 1004, a quantity of the first type of light (e.g., blue light) transmitted from a first location on the top surface and/or the bottom surface is measured during the first time period at a same time that the light is provided at block 1002. For example, with reference to FIGS. 2A, 3A, 4A, and 5A, the first camera 210 can be used to measure a quantity of blue light transmitted from the first location 51A on the top surface 51 of the optical device 50 during the first time period. Although not shown, another camera can be placed below the bottom surface 53 to make similar measurements as the first camera 210 that measures the quantity of light transmitting from the top surface 51 at the first location 51A.

[0059] Additionally, at block 1004, a quantity of the first type of light (e.g., blue light) transmitted through a location on an edge 52 can also be measured during the first time period at a same time that the light is provided at block 1002. For example, with reference to FIGS. 2A, 3A, 4A, and 5A, the second camera 220 can be used to measure a quantity of blue light transmitted through the location 52A on the edge

52 of the optical device **50** during the first time period. The measurements made at block **1004** can be used as a reference for comparison to similar measurements after at least a portion of an edge **52** of the optical device **50** is coated.

[0060] In some embodiments, the first camera **210** and the second camera **220** can move to enable the cameras **210**, **220** to take measurements from more than one location on the top surface **51** or the edge **52**. In one embodiment, the movable cameras can move along a straight line (see e.g., path **211** in FIG. **2**C), a partial or full circular line (see e.g., circular path **212** in FIG. **2**C), or other path having a different shape. Moving the camera can refer to cameras with pan and tilt functionality as well as cameras in which the entire camera is movable, for example along a track. In other embodiments, a support (e.g., support **205**) on which the optical device **50** is positioned is moved to enable the cameras **210**, **220** to take measurements of different portions of the top surface **51** and the edges **52** of the optical device **50**. Taking measurements from more than one location on the top surface **51**, bottom surface **53**, and/or edges **52** can help achieve more useful results if there is significant variation in the light transmitted from different locations on the top surface **51**, bottom surface **53**, or edges **52** of the optical device **50**. These measurements at the different locations on the top surface **51**, bottom surface **53**, and/or edges **52** can be repeated at block **1010** if performed at block **1004**, so that each measurement at block **1004** has a corresponding measurement at block **1010**.

[0061] Alternatively, in some embodiments, one or more of the first camera **210** and the second camera **220** can be replaced with multiple cameras arranged along a path, such as the straight-line path (see e.g., path **211** in FIG. **2**C), a partial or full circular path (see e.g., circular path **212** in FIG. **2**C), or a path having a different shape to enable more measurements of the top surface **51** and/or edges **52** to be made. In one embodiment, instead of multiple cameras, one or more of the first camera **210** and the second camera **220** include multiple input heads (e.g., fiber optic input heads) to enable the additional measurements of the top surface **51** and/or edges **52** to be made.

[0062] At block **1006**, at least a portion of an edge **52** of the one or more edges **52** of the optical device **50** are coated (e.g., darkened, such as blackened) with a first coating of an optically absorbent material during a second time period. The second time period can begin after the first time period has ended. In some embodiments, all of the edges **52** are coated with the coating of optically absorbent material, for example as shown in FIG. **2**B. In some embodiments, in which the light is provided into the optical device **50** through a portion of the edge **52** at block **1002** (see e.g., FIG. **3**A and FIG. **4**A), then at least this portion of the edge **52** can remain un-coated at block **1006**.

[0063] At block **1008**, the first type of light can be provided into the coated waveguide combiner (e.g., coated optical device **50**A, **50**B) from a light source during a third time period. The third time period can begin after the second time period has ended. At block **1008**, the light is provided in the same way that the light was provided at block **1002**. For example, with reference to FIG. **2**A, if the light was provided from the light source **230** through the prism **240** centered around the location **53**A on the bottom surface **53** of optical device **50** at block **1002**, then the light is provided from the light source **230** through the prism **240** centered around the location **53**A on the bottom surface **53** of optical device **50**A at block **1008**. All aspects of the light provided are to remain the same at blocks **1002**, **1008**. For example, if the light source **230** is a laser, then the power provided to the laser, the duty cycle of the laser, the wavelength of light output by the laser, and any other settings associated with the light source **230** should remain the same at blocks **1002**, **1008**. By having the same light provided to the respective optical devices **50**, **50**A at blocks **1002**, **1008**, a more accurate effect of the coated edge **55** can be determined.

[0064] At block **1010**, the same measurements performed at block **1004** on the optical device **50** are performed again on the coated optical device (e.g., optical devices **50**A, **50**B) during the third time period at a same time that the light is provided at block **1008**. The quantity of the first type of light (e.g., blue light) transmitted from a first location on the top surface and/or the bottom surface of the coated optical device is measured during this third time period. For example, with reference to FIGS. **2**A, **3**A, **4**A, and **5**A, the first camera **210** can be used to measure a quantity of blue light transmitted from the first location **51**A on the top surface **51** of the optical device **50**A, **50**B, **50**D during the third time period.

[0065] Additionally, at block **1010**, a quantity of the first type of light (e.g., blue light) transmitted from a location on an edge can also be measured during the third time period at a same time that the light is provided at block **1008**. For example, with reference to FIGS. **2**A, **3**A, **4**A, and **5**A, the second camera **220** can be used to measure a quantity of blue light transmitted from the location **55**A on the edge **55** of the coated optical device (e.g., coated optical device **50**A, **50**B, **50**D) during the third time period. The measurements made at block **1010** can then be analyzed to determine the effectiveness of the coated edge **55** on reducing the amount of light transmitted from the edge and the amount of light transmitted from other undesired locations, such as the first location **51**A on the top surface **51**.

[0066] At block **1012** a determination is made on whether to repeat blocks **1002-1010** on another optical device, such as the optical device **50**. Often, block **1002-1010** are repeated at least once, so that the performance of at least two different edge-darkening coatings can be analyzed. Blocks **1002-1010** can be repeated for each different coating to be analyzed. In some embodiments, the different coatings can have differences that include but are not limited to different materials, different thicknesses, and different opacity. When repeating blocks **1002-1010**, an identical version (e.g., same size, shape, material, etc.) of uncoated waveguide combiner (e.g., optical device **50**) used during the first execution of blocks **1002-1010** can be used during the second and each subsequent execution of blocks **1002-1010** for coatings that are going to be compared to each other. In some embodiments, blocks **1002-1004** can be skipped if there is not likely to be significant variation between the measurements performed on the uncoated optical devices.

[0067] At block **1014**, generally performed after repeating blocks **1002-1010** at least once, a selection of a better-suited coating can be made. For example, if two coatings are tested and the measurements made at blocks **1004** and **1010** show that a first coating measured on a first execution of blocks **1002-1010** is better suited as optically absorbent coating than a second coating measured on a second execution of blocks **1002-1010**, then a selection of the first coating can be made.

[0068] Determining which edge-darkening coating is better suited can be based on a number of metrics. For example, in one embodiment, the coating that provided the largest reduction in the first type of light (e.g., blue light) between the measurements at block **1010** compared to the measurements at block **1004** can be determined to be better suited for absorbing light. In another embodiment, the coating for which the lowest amount of the first type of light (e.g., blue light) for the measurements at block **1010** can be determined to be better suited for absorbing light. This better-suited coating can be selected as the coating for the optical device, for example in larger production run, for example for use in a finished product. In some embodiments, measurements from both the first camera **210** and the second camera **220** can be used to determine this reduction. In some of these embodiments, a higher weighting factor can be placed on the amount of light reduced through the non-edge surface (e.g., the top surface **51**) relative to the light reduced through the edge **52**. In other embodiments, only the measurement from the first camera **210** measuring the light transmitting through the top surface **51** is used in determining the better coating.

[0069] Although the method **1000** is described as performing the measurements at blocks **1004** and **1010** on the exact same optical device before edge coating (block **1004**) and after edge coating (block **1010**), this is not required. For example, a standard uncoated optical device can be used for measurements at block **1004**, and then numerous coated optical devices can be measured when block **1010** is executed. Furthermore, in some embodiments, block **1004** can be performed once, and then block **1010** can be performed numerous times (e.g., ten times, one hundred times or more) on coated optical devices.

[0070] Although the method **1000** was described as being performed on a single waveguide combiner that receives a first coating and then repeated for a second waveguide combiner that receives a second coating, this disclosure also envisions analyzing multiple optical devices simultaneously. For example, with multiple light sources (e.g., light source **230** of FIG. **2**A) and multiple sets of cameras (e.g., the first camera **210** and the second camera **220**), multiple uncoated waveguide combiners could be analyzed at block **1004** simultaneously and multiple coated waveguide combiners could be analyzed at block **1010** simultaneously.

[0071] FIG. **7** is a top view of a cut-out section **700** (hereafter referred to as "the section **700**") of the optical device **50** from FIG. **1**A, according to one embodiment. The section **700** includes a top surface **751** and edges **752**. The size and shape of the section **700** has been modified relative to the size and shape of the optical device **50**. First, the size of the section **700** is substantially smaller (e.g., 25% smaller, 50% smaller, 75% smaller, 90% smaller) than the optical device **50**. This reduced size of the section **700** reduces the distance the light, for example the light L provided by the metrology system **200** of FIG. **2**A, travels inside the section **700** before the light encounters one of the edges **752** compared to the distance light travels inside the optical device **50** before reaching an edge **52**. Secondly, the shape of section **700** is modified relative to the shape of the optical device **50** to increase the proportion of total surface area belonging to surface area of the edges **752** compared to the proportion of the total surface area belonging to the edges **52** of the optical device **50**.

[0072] Thus, the smaller section **700** with reduced distance to the edges **752** and a higher proportion of edge surface area increases the amount of edge interaction, the light has in the section **700** compared to the optical device **50**. This increased interaction with the edges **752** can be used to amplify the differences that different coatings have on the light measured at block **1010** after the edges of the optical device are coated. Therefore, in some embodiments, the method **1000** described above in reference to FIG. **6** is performed on cut-out sections like the section **700** to increase the interaction of the light with the edges of the optical device. For example, the measurements made at block **1004** can be performed on the section **700** without any coated edges, and measurements at block **1010** can be performed after some or all of the edges **752** of the section **700** have been coated.

[0073] The method can then be repeated using other sections that are identical to the section **700** except for the coating that is added to the section **700** between blocks **1004** and **1010**, so that the effectiveness of the different coatings on the sections can be determined. As this method is repeated, the shape of the sections (e.g., section **700**) (also referred to as optical devices) are modified (i.e., from the shape of the optical device **50** to the shape of section **700**) before the first type of light (e.g., blue light) is provided to the sections. The optical device **50** can have a shape that is substantially the same as the shape that the waveguide combiner will have as a component in a finished product while the section **700** is not a shape of a component to be included in a finished product.

[0074] Coating the edges of optical devices with an optically absorbent coating can improve the performance of these optical devices. For example, the performance of the optical device **50** described above can be improved when the uncoated edges **52** are coated with an optically absorbent coating to form the coated (e.g., blackened) edges **55**. These coated edges **55** reduce the amount of light transmitted through the coated edges **55** relative to corresponding uncoated edges and also reduce the amount of light transmitted from other locations where it is undesirable to transmit light, such as location **51**A on the top surface of the waveguide combiners described above. Although, coated edges, such as the coated edge **55** can improve the performance of these optical devices (e.g., improving image quality output from a waveguide combiner), there can be substantial variability in the performance among different coatings used to darken an edge of an optical device. Furthermore, there can variability for the same coating when that coating is used on different devices. Consequently, it can be challenging to determine which coating should be used for which optical device. Conventional methods have generally focused on analyzing the quality of the output of the optical device. For example, for waveguide combiners the conventional has been to focus on the quality of the images output by the waveguide combiner, but there are numerous variables that can affect this image quality.

[0075] The methods and systems described above address these problems by quantifying how effective different coatings are at reducing light transmitted from undesirable locations (e.g., the edges and locations on top or bottom surface at locations other than the location of the intended optical output, such as location **51**A on the top surface **51** described above). This reduction in transmitted light is quantified by using the same cameras take the same measurements before and after edge-coating is performed. The difference in these measurements before and after edge-

coating is related to the reduction in the transmitted light. By performing the same measurements—before and after edge-coating—on multiple optical devices that are identical except for the coating applied to the edges, the measurements can be used to determine the coatings that perform better than other coatings for reducing the unintended transmitted light.

[0076] While the foregoing is directed to embodiments of the present disclosure, other and further embodiments of the disclosure may be devised without departing from the basic scope thereof, and the scope thereof is determined by the claims that follow.

What is claimed is:

1. A method of optical device metrology comprising:

a) providing a first type of light into a first optical device during a first time period, the first optical device comprising a top surface, a bottom surface, and one or more edges connecting the top surface with the bottom surface;

b) measuring a quantity of the first type of light transmitted from a first location on the top surface or the bottom surface during the first time period;

c) coating at least a portion of an edge of the one or more edges with a first coating of optically absorbent material during a second time period that occurs after the first time period;

d) providing the first type of light into the first optical device during a third time period that occurs after the second time period; and

e) measuring a quantity of the first type of light transmitted from the first location on the top surface or the bottom surface during the third time period.

2. The method of claim **1**, further comprising repeating blocks a-e) for a second optical device having the same shape and size as the first optical device, wherein the second optical device is coated with a second coating instead of the first coating.

3. The method of claim **2**, wherein the second coating is a different material than the first coating.

4. The method of claim **2**, further comprising

f) determining the first coating or the second coating is better suited for absorbing light based on the measurements made during blocks b) and e) for the first optical device and the second optical device.

5. The method of claim **4**, further comprising coating additional optical devices with the first coating or the second coating based on the determination at block f).

6. The method of claim **2**, wherein a shape of the first optical device and the second optical device is modified before the first type of light is provided to the first optical device and the second optical device.

7. The method of claim **6**, wherein, before the modification, the first optical device and the second optical device have a size and shape substantially corresponding to a size and shape that the first optical device and the second optical device would have in a finished product.

8. The method of claim **1**, wherein the first type of light is blue light provided from a laser.

9. The method of claim **1**, further comprising measuring a quantity of the first type of light transmitted from a location on an edge of the one or more edge during the first time period and the third time period.

10. The method of claim **1**, further comprising measuring a quantity of the first type of light transmitted from two or more locations on the first optical device during the first time period and the third time period.

11. The method of claim **1**, wherein

the first type of light is provided to a location on the bottom surface of the first optical device during the first time period, and

the first type of light is provided to the location on the bottom surface of the first optical device during the third time period.

12. The method of claim **1**, wherein

the first type of light is provided to a location on an edge of the one or more edges of the first optical device during the first time period, and

the first type of light is provided to the location on the edge of the one or more edges of the first optical device during the third time period.

13. The method of claim **2**, wherein

the first type of light is provided to a plurality of gratings of the first optical device during the first time period, and

the first type of light is provided to a plurality of gratings of the second optical device during the first time period.

14. The method of claim **1**, further comprising simultaneously performing blocks a-e) for a second optical device having the same shape and size as the first optical device, wherein the second optical device is coated with a second coating instead of the first coating.

15. A method of optical device metrology comprising:

a) providing a first type of light into a first optical device during a first time period, the first optical device comprising a top surface, a bottom surface, and one or more edges connecting the top surface with the bottom surface;

b) measuring, by a first camera, a quantity of the first type of light transmitted from a first location on the top surface or the bottom surface during the first time period;

c) coating at least a portion of an edge of the one or more edges with a first coating of optically absorbent material during a second time period that occurs after the first time period;

d) providing the first type of light into the first optical device during a third time period that occurs after the second time period; and

e) measuring, by the first camera, a quantity of the first type of light transmitted from the first location on the top surface or the bottom surface during the third time period.

16. The method of claim **15**, further comprising repeating blocks a-e) for a second optical device having the same shape and size as the first optical device, wherein the second optical device is coated with a second coating instead of the first coating.

17. The method of claim **16**, further comprising

f) determining the first coating or the second coating is better suited for absorbing light based on the measurements made during blocks b) and e) for the first optical device and the second optical device.

18. The method of claim **15**, further comprising

g) measuring, by a second camera, a quantity of the first type of light transmitted from a first location on an edge of the one or more edges during the first time period and the third time period.

19. The method of claim **18**, further comprising repeating blocks a-e) and g) for a second optical device having the same shape and size as the first optical device, wherein the second optical device is coated with a second coating instead of the first coating.

20. A method of optical device metrology comprising:

a) providing a first type of light into a first optical device during a first time period, the first optical device comprising a top surface, a bottom surface, and one or more edges connecting the top surface with the bottom surface;

b) measuring, by a first camera, a quantity of the first type of light transmitted from a first location on the top surface or the bottom surface during the first time period;

c) measuring, by a second camera, a quantity of the first type of light transmitted from a first location on an edge of the one or more edges during the first time period;

d) coating at least a portion of an edge of the one or more edges with a first coating of optically absorbent material during a second time period that occurs after the first time period;

e) providing the first type of light into the first optical device during a third time period that occurs after the second time period;

f) measuring, by the first camera, a quantity of the first type of light transmitted from the first location on the top surface or the bottom surface during the third time period

g) measuring, by the second camera, a quantity of the first type of light transmitted from the first location on the edge of the one or more edges during the third time period; and

h) determining the first coating or the second coating is better suited for absorbing light based on the measurements made during blocks b), c), f), and g) for the first optical device and the second optical device, wherein the measurements made by the first camera are weighted more heavily than the measurements made by the second camera for determining which coating is better suited.

* * * * *