US 20220352002A1

(19) **United States**

(12) **Patent Application Publication**

GODET et al.

(10) **Pub. No.: US 2022/0352002 A1**

(43) **Pub. Date: Nov. 3, 2022**

(54) **PATTERNED CHUCK FOR DOUBLE-SIDED PROCESSING**

(71) Applicant: **Applied Materials, Inc.**, Santa Clara, CA (US)

(72) Inventors: **Ludovic GODET**, Sunnyvale, CA (US); **Rutger MEYER TIMMERMAN THIJSSEN**, Sunnyvale, CA (US)

(21) Appl. No.: **17/706,319**

(22) Filed: **Mar. 28, 2022**

Related U.S. Application Data

(62) Division of application No. 16/183,896, filed on Nov. 8, 2018, now Pat. No. 11,289,361.

(60) Provisional application No. 62/584,285, filed on Nov. 10, 2017.

Publication Classification

(51) **Int. Cl.**

H01L 21/683	(2006.01)
B25B 11/00	(2006.01)
H01L 21/687	(2006.01)

(52) **U.S. Cl.**

CPC ***H01L 21/6838*** (2013.01); ***B25B 11/005*** (2013.01); ***H01L 21/6833*** (2013.01); ***H01L 21/68757*** (2013.01); ***H01L 21/68735*** (2013.01); ***H01L 21/6831*** (2013.01); *G02B 6/0065* (2013.01)

(57) **ABSTRACT**

Embodiments described herein relate to a substrate chucking apparatus having a plurality of cavities formed therein. The cavities are formed in a body of the chucking apparatus and a plurality of support elements extend from the body and separate each of the plurality of cavities. In one embodiment, a first plurality of ports are formed in a top surface of the body and extend to a bottom surface of the body through one or more of the plurality of support elements. In another embodiment, a second plurality of ports are formed in a bottom surface of the plurality of cavities and extend through the body to a bottom surface of the body. In yet another embodiment, a first electrode assembly is disposed adjacent the top surface of the body within each of the plurality of support elements and a second electrode assembly is disposed within the body adjacent each of the plurality of cavities.

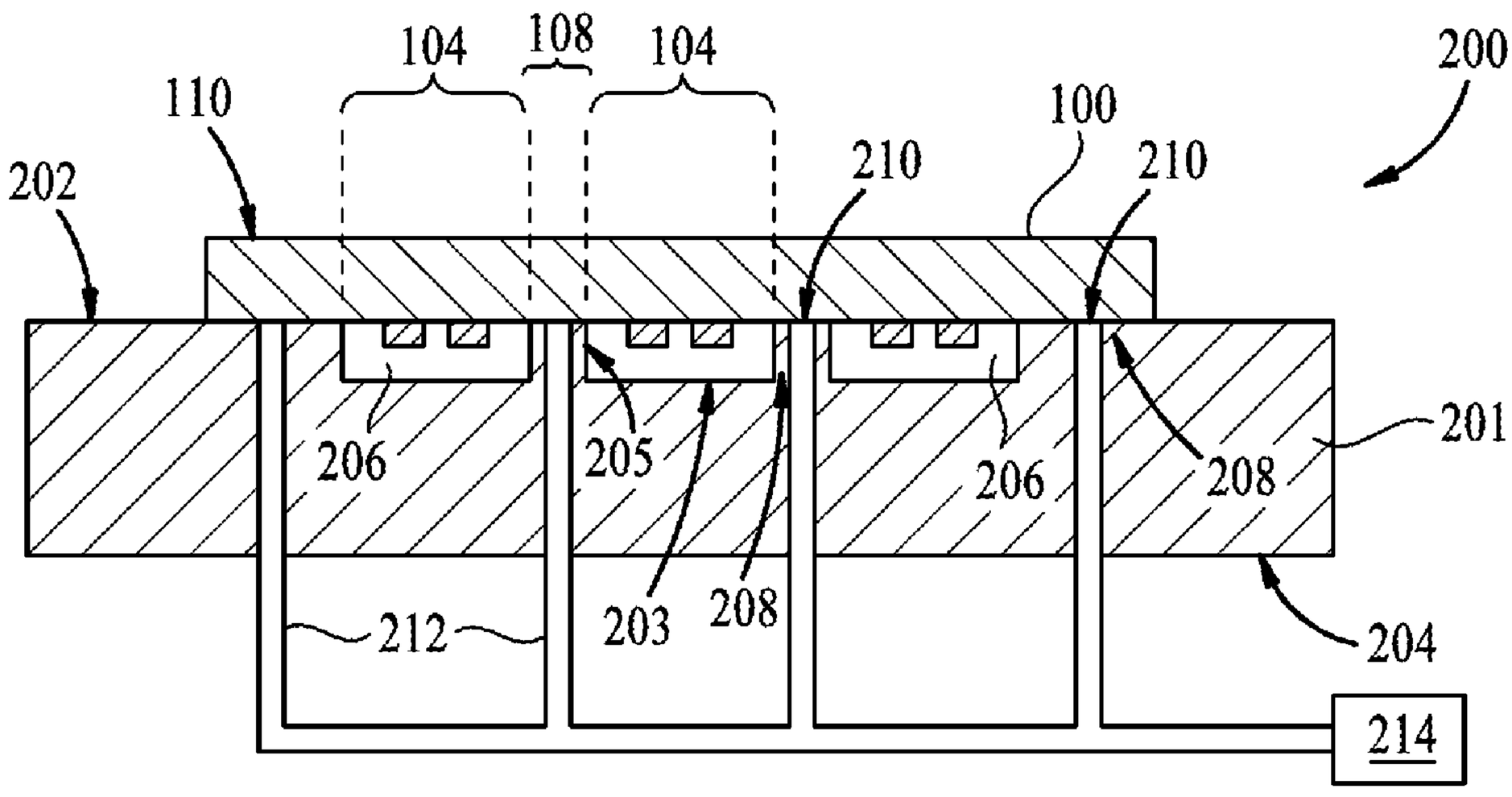

FIG. 1A

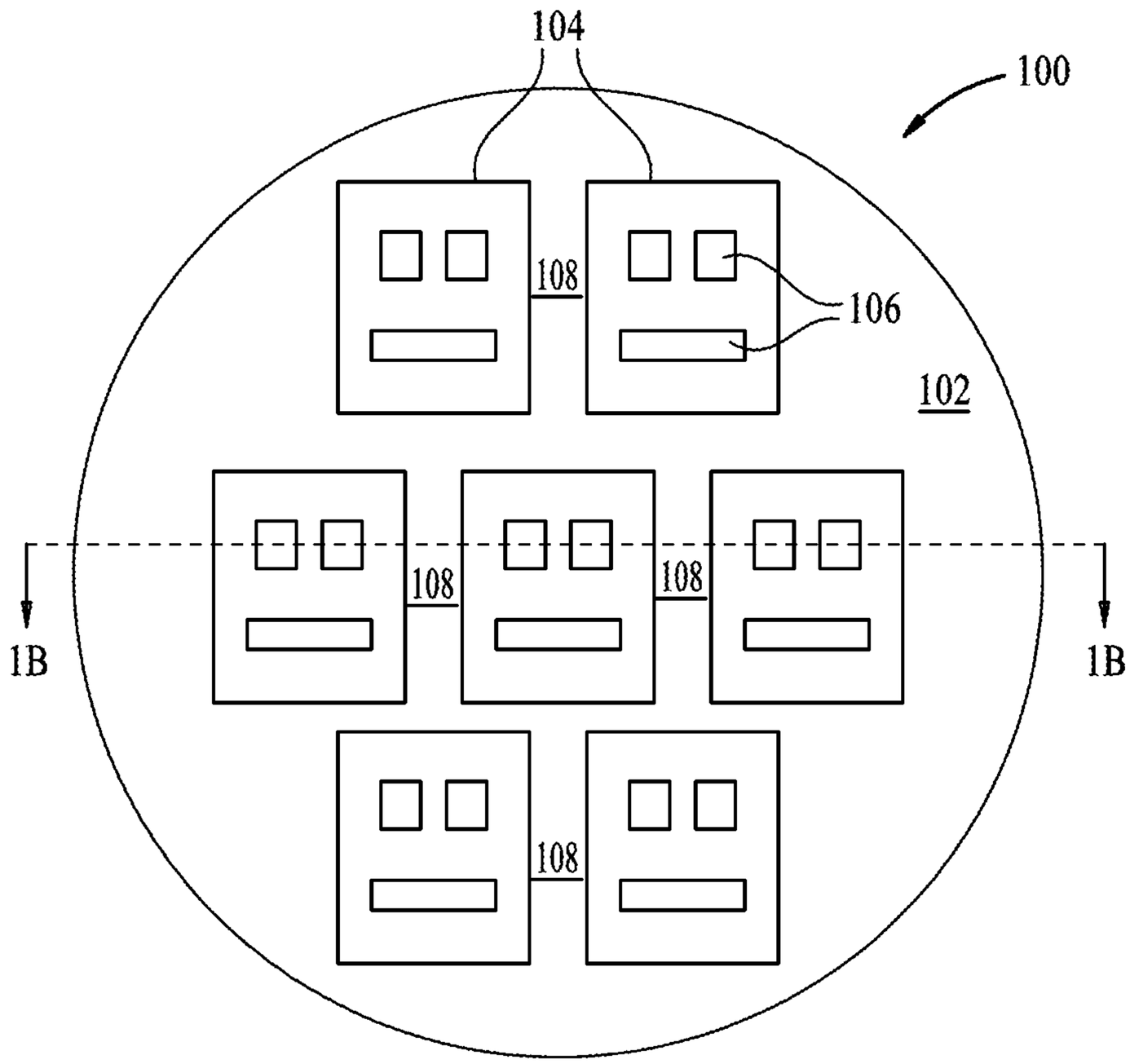
104
100
108
106
102
108
108
1B
1B
108

FIG. 1B

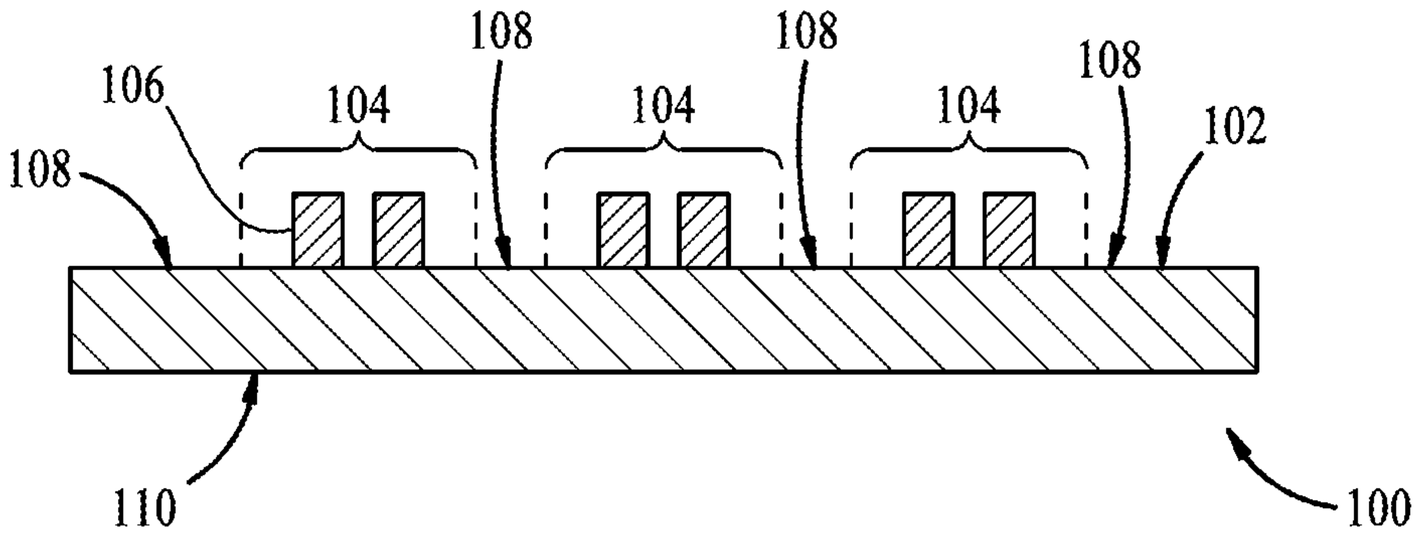
108
108
108
106
104
104
104
102
108
110
100

FIG. 2

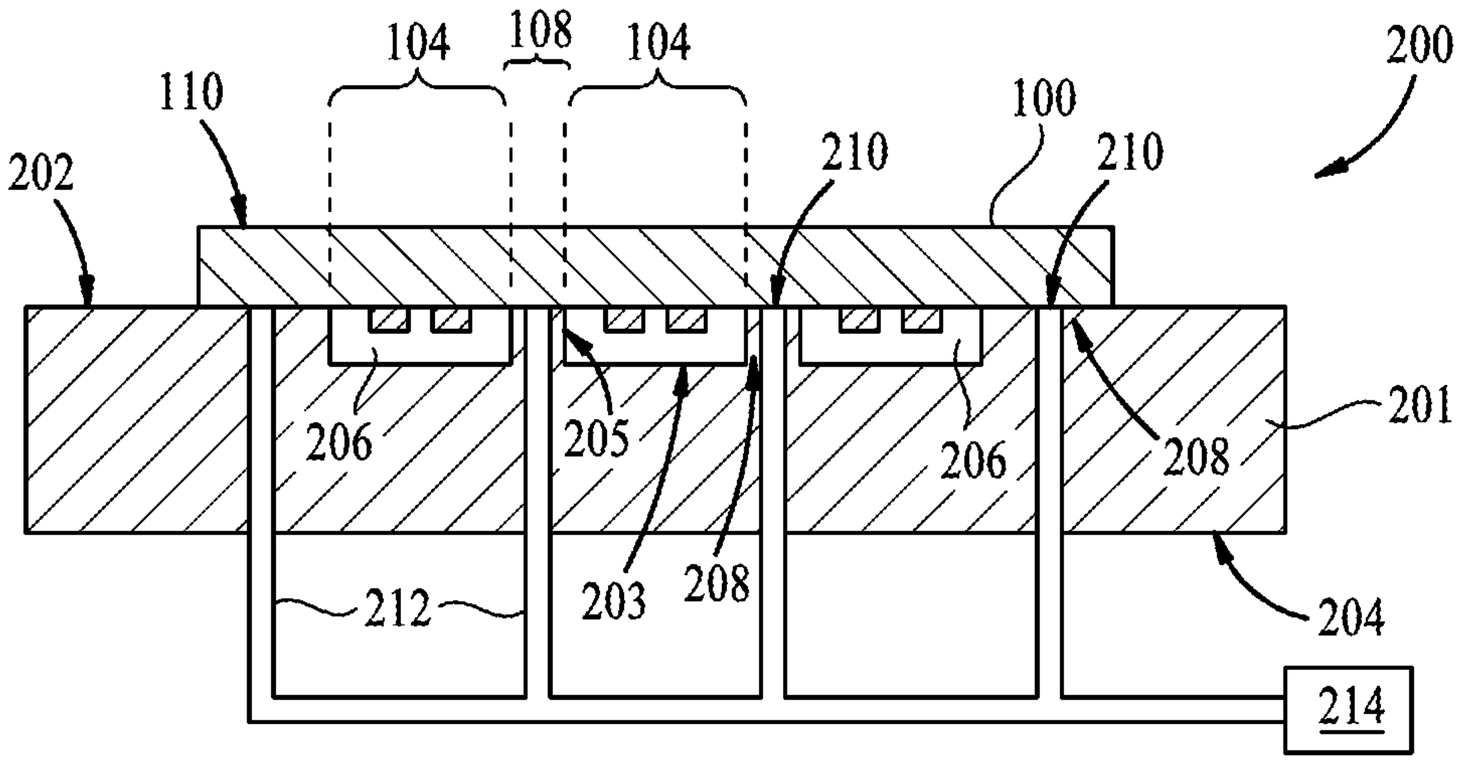
104
108
104
200
110
100
202
210
210
206
205
206
208
201
212
203
208
204
214

FIG. 3A

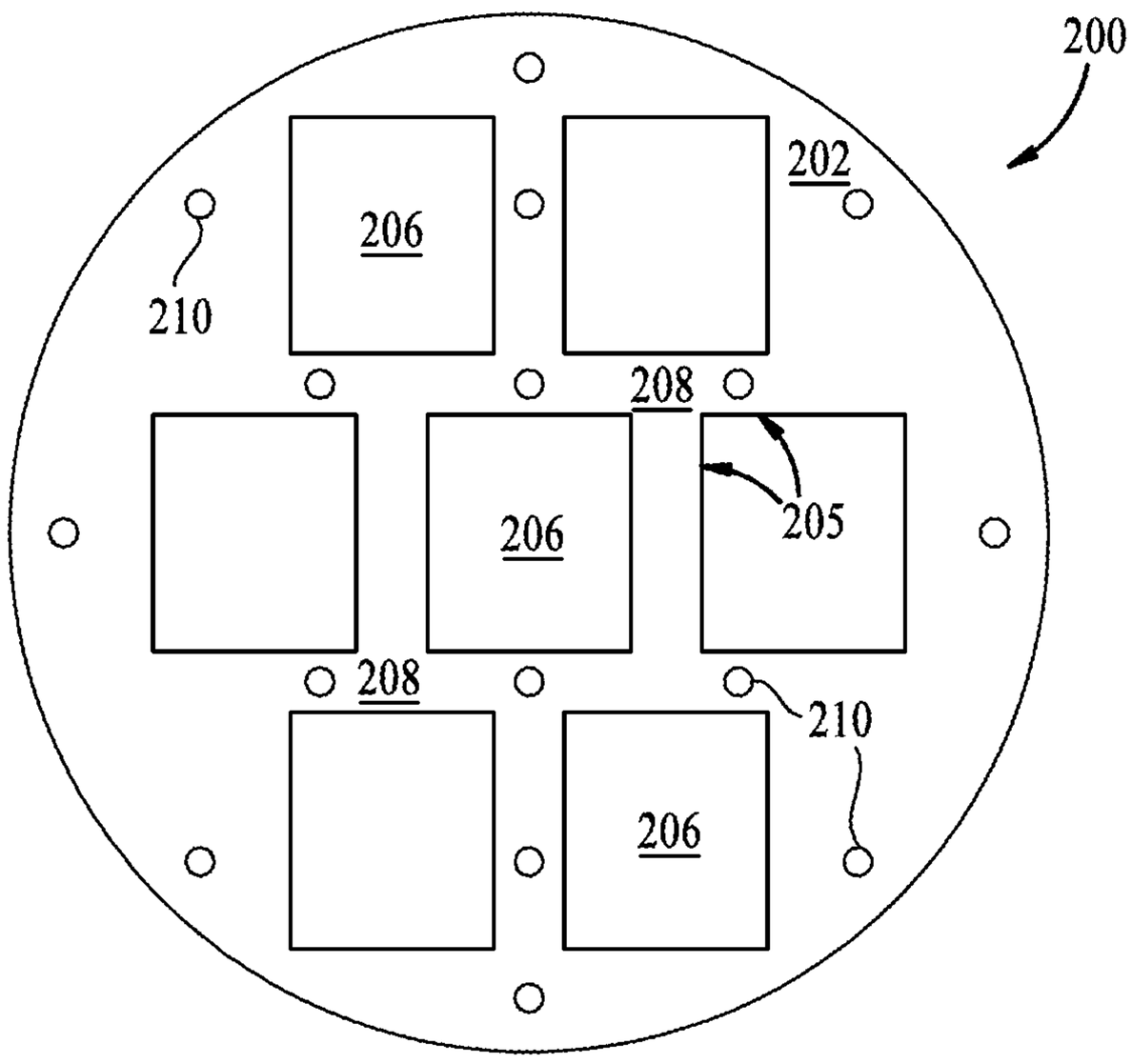
200
202
206
210
208
206
205
208
210
206

FIG. 3B

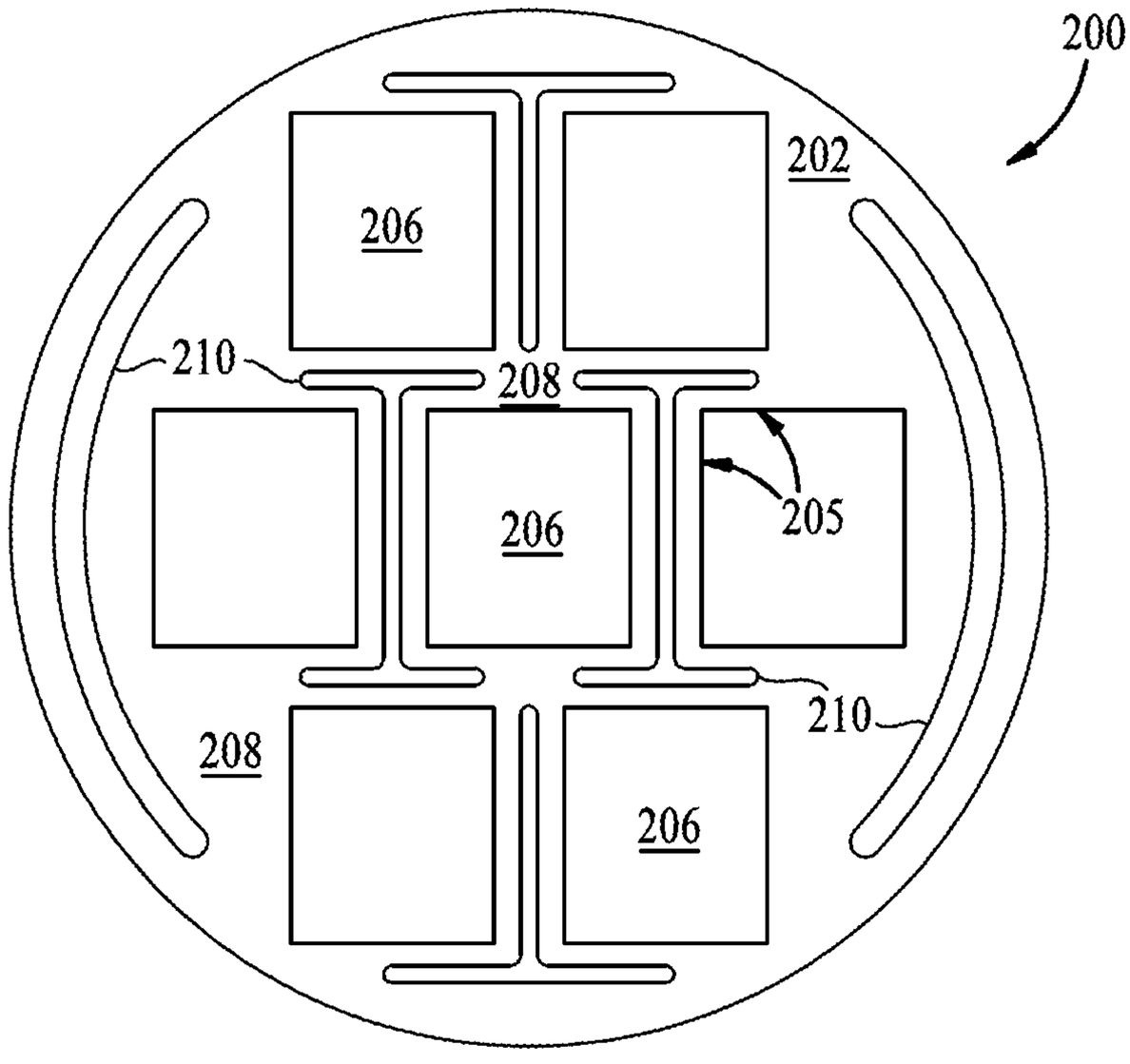
200
202
206
210
208
206
205
210
208
206

FIG. 4

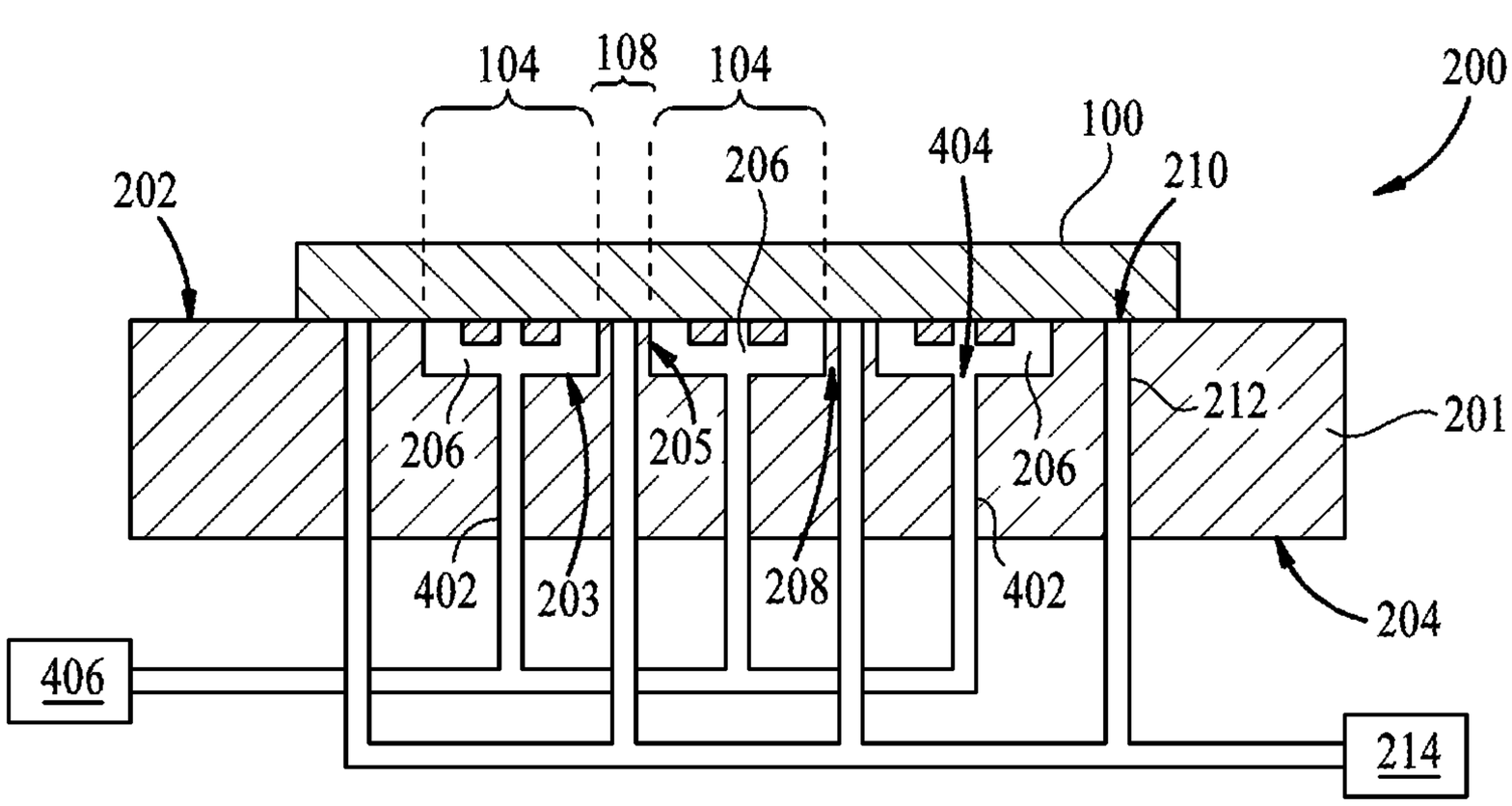
104
108
104
200
202
206
404
100
210
212
201
206
205
206
402
203
208
402
204
406
214

FIG. 5

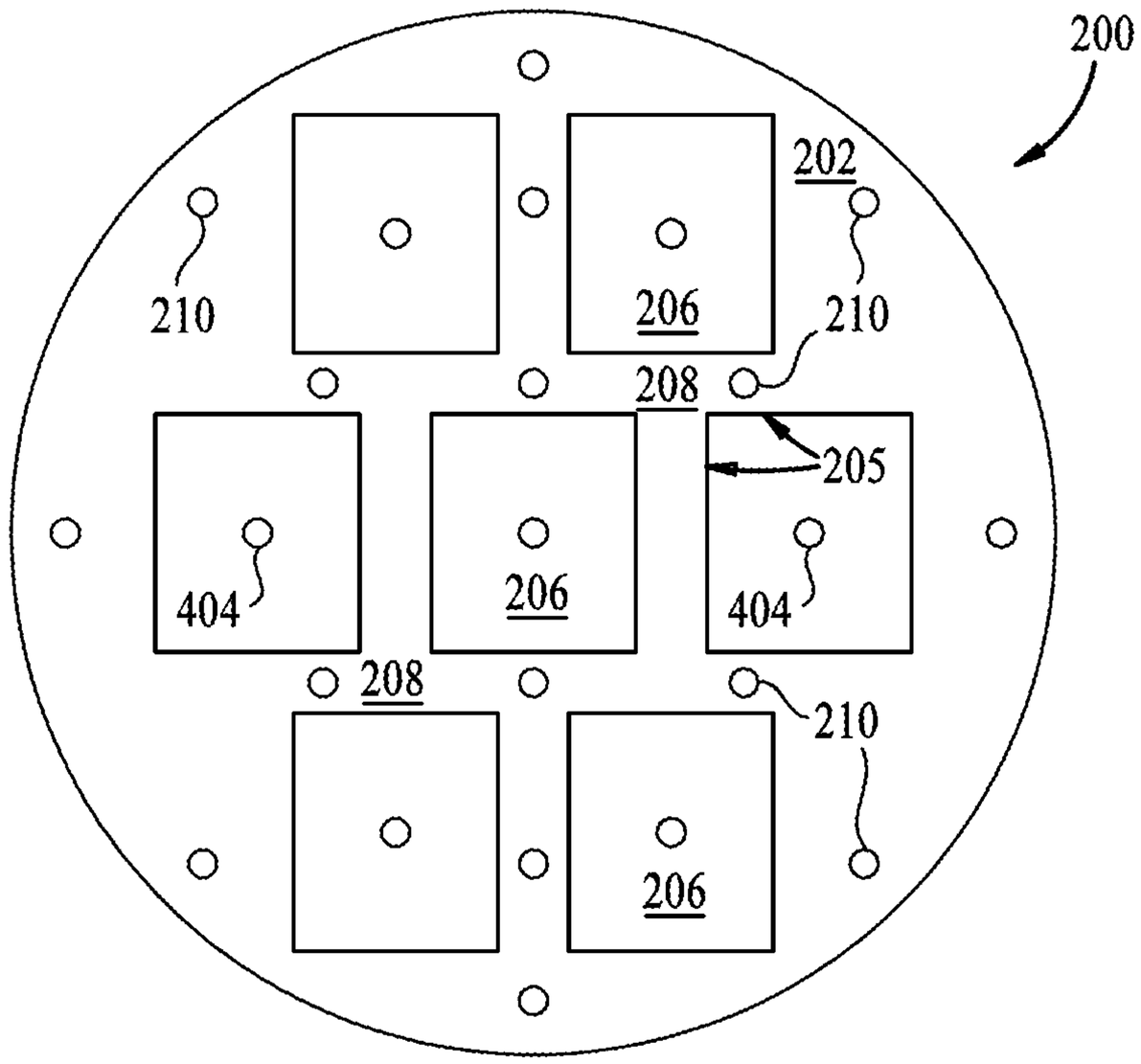
200
202
210
206
210
208
205
404
206
404
208
210
206

FIG. 6

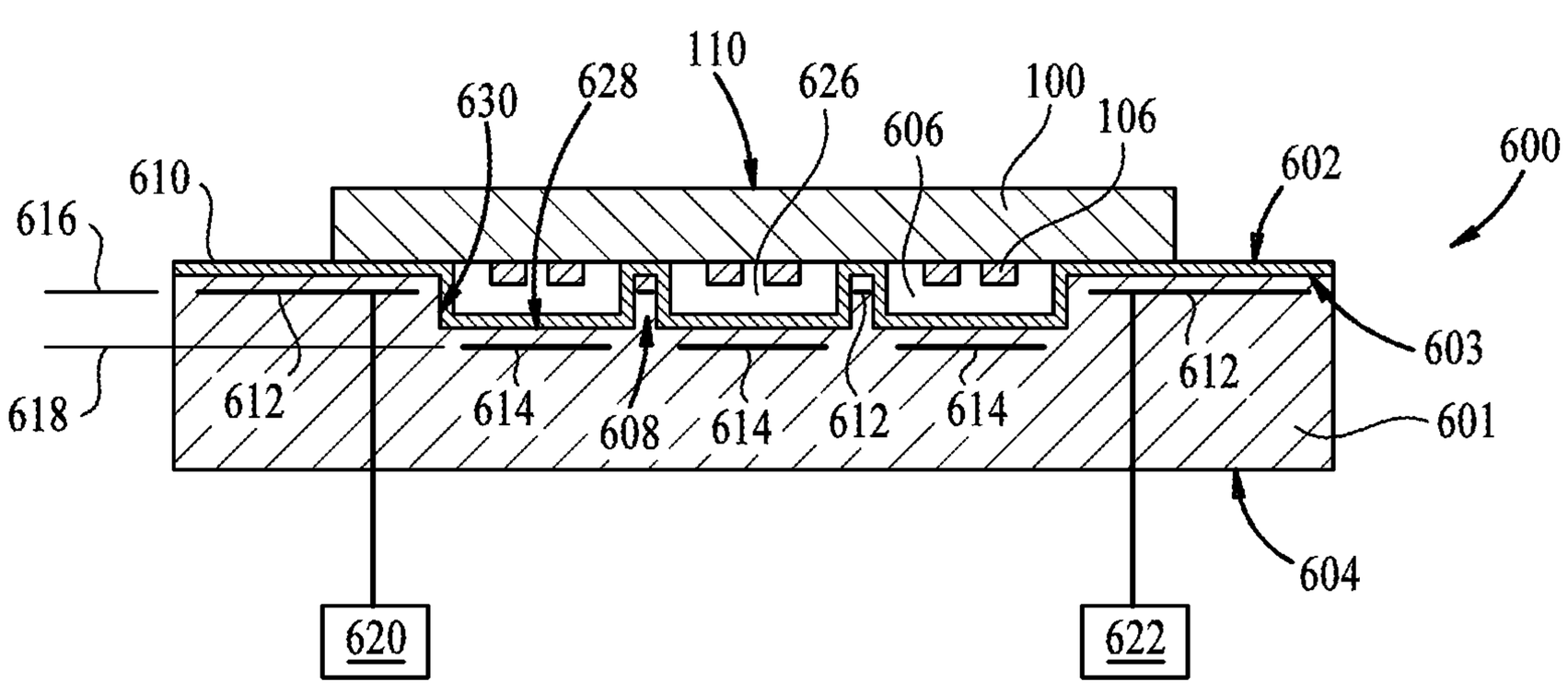
110
630
628
626
606
100
106
610
602
600
616
603
612
614
608
614
612
614
612
601
618
604
620
622

PATTERNED CHUCK FOR DOUBLE-SIDED PROCESSING

CROSS-REFERENCE TO RELATED APPLICATIONS

[0001] This application is a divisional of co-pending U.S. patent application Ser. No. 16/183,896, filed Nov. 8, 2018, which claims benefit of U.S. provisional patent application Ser. No. 62/584,285, filed Nov. 10, 2017. Each of the aforementioned related patent applications is herein incorporated by reference.

BACKGROUND

Field

[0002] Embodiments of the present disclosure generally relate to a substrate chuck. More specifically, embodiments described herein relate to a patterned substrate chuck.

Description of the Related Art

[0003] Substrate chucking apparatus are commonly used in the semiconductor and display industries to support a substrate during transfer or processing of the substrate. Emerging technologies have lead to the development of various advanced processing techniques for device and structure fabrication on substrates. For example, fabrication of waveguide apparatus for virtual reality and augmented reality applications have pushed the boundaries of conventional substrate processing techniques.

[0004] Waveguide apparatus incorporate microstructures formed on a glass or glass-like substrate. Often, microstructures are formed on a front side of the substrate and a backside of the substrate. However, handling and supporting a substrate with microstructures formed on the front and back of the substrate during processing is challenging. For example, conventional chucking apparatus may damage microstructures formed on a backside of the substrate while the front side is being processed.

[0005] Thus, what is needed in the art are improved chucking apparatus.

SUMMARY

[0006] In one embodiment, a substrate chucking apparatus is provided. The apparatus includes a body having a top surface and a bottom surface opposite the top surface, a plurality of cavities formed in the body and recessed from the top surface, and a plurality of support elements separating the plurality of cavities extending from the body to the top surface. A plurality of ports are formed in the body and extend from the top surface to the bottom surface through one or more of the plurality of support elements and a conduit is in fluid communication with each of the plurality of ports.

[0007] In another embodiment, a substrate chucking apparatus is provided. The apparatus includes a body having a top surface and a bottom surface opposite the top surface, a plurality of cavities formed in the body and recessed from the top surface, and a plurality of support elements separating the plurality of cavities extending from the body to the top surface. A first plurality of ports are formed in the body and extend from the top surface to the bottom surface through one or more of the plurality of support elements and a first conduit is in fluid communication with each of the first plurality of ports. A second plurality of ports are formed in the body and extend from a bottom surface of each of the plurality of cavities to the bottom surface of the body. A second conduit is in fluid communication with each of the second plurality of ports.

[0008] In another embodiment, a substrate chucking apparatus is provided. The apparatus includes a body having a top surface and a bottom surface opposite the top surface, a plurality of cavities formed in the body and recessed from the top surface, and a plurality of support elements separating the plurality of cavities and extending from the body to the top surface. A polymeric coating is disposed on the top surface of the body, the plurality of support elements, and within the plurality of cavities. A first electrode assembly is disposed adjacent the top surface of the body and within each of the plurality of support elements and a second electrode assembly is disposed adjacent each of the plurality of cavities.

BRIEF DESCRIPTION OF THE DRAWINGS

[0009] So that the manner in which the above recited features of the present disclosure can be understood in detail, a more particular description of the disclosure, briefly summarized above, may be had by reference to embodiments, some of which are illustrated in the appended drawings. It is to be noted, however, that the appended drawings illustrate only exemplary embodiments and are therefore not to be considered limiting of its scope, may admit to other equally effective embodiments.

[0010] FIG. **1**A illustrates a plan view of a substrate with dies having microstructures formed thereon according to an embodiment described herein.

[0011] FIG. **1**B illustrates a cross-sectional view of the substrate of FIG. **1**A taken along line **1**B-**1**B according to an embodiment described herein.

[0012] FIG. **2** illustrates a cross-section view of a vacuum chucking apparatus according to an embodiment described herein.

[0013] FIG. **3**A illustrates a plan view of the vacuum chucking apparatus of FIG. **2** according to an embodiment described herein.

[0014] FIG. **3**B illustrates a plan view of the vacuum chucking apparatus of FIG. **2** according to an embodiment described herein.

[0015] FIG. **4** illustrates a cross-sectional view of a vacuum chucking apparatus according to an embodiment described herein.

[0016] FIG. **5** illustrates a plan view of the vacuum chucking apparatus of FIG. **4** according to an embodiment described herein.

[0017] FIG. **6** illustrates a cross-sectional view of an electrostatic chucking apparatus according to an embodiment described herein.

[0018] To facilitate understanding, identical reference numerals have been used, where possible, to designate identical elements that are common to the figures. It is contemplated that elements and features of one embodiment may be beneficially incorporated in other embodiments without further recitation.

DETAILED DESCRIPTION

[0019] Embodiments described herein relate to a substrate chucking apparatus having a plurality of cavities formed

therein. The cavities are formed in a body of the chucking apparatus and a plurality of support elements extend from the body and separate each of the plurality of cavities. In one embodiment, a first plurality of ports are formed in a top surface of the body and extend to a bottom surface of the body through one or more of the plurality of support elements. In another embodiment, a second plurality of ports are formed in a bottom surface of the plurality of cavities and extend through the body to a bottom surface of the body. In yet another embodiment, a first electrode assembly is disposed adjacent the top surface of the body within each of the plurality of support elements and a second electrode assembly is disposed within the body adjacent each of the plurality of cavities.

[0020] FIG. **1**A illustrates a plan view of a substrate **100** with dies having microstructures **106** formed thereon according to an embodiment described herein. In one embodiment, the substrate **100** is formed from a glass or glass-like material, such as quartz or sapphire. In another embodiment, the substrate is formed from a semiconducting material, such as a silicon material or the like. Although the substrate **100** is illustrated as having a substantially circular shape, it is contemplated that the substrate **100** may be polygonal in shape, such as quadrilateral in shape, for example, rectangular or square shaped.

[0021] The substrate **100** is illustrated as having a plurality of dies **104** formed thereon. The dies **104** correspond to areas of the substrate **100** which are patterned with desired structures for subsequent utilization in various devices, such as a computing device, an optical device, or the like. The dies **104** include the microstructures **106** formed thereon. The microstructures **106** are features formed on the dies **104** by various fabrication processes, such as lithography processes, for example, nanoimprint lithography (NIL) processes. Alternatively, the microstructures **106** are features which are etched or deposited on the substrate **100**. In one embodiment, the microstructures **106** are grating structures and the die **104** is contemplated to be a waveguide or a portion of a waveguide apparatus.

[0022] The dies **104** are arranged on the substrate **100** with kerf areas **108** formed between adjacent dies **104**. The kerf areas **108** are regions of the substrate surface which are not occupied by the dies **104**. The kerf areas **108** substantially surround each individual die **104** and space individual dies **104** from one another. The kerf areas **108** may also extend between individual dies **104** and a perimeter of the substrate **100**. In one embodiment, the kerf areas **108** have substantially no microstructures or features formed thereon. In various implementations, the kerf areas **108** are regions which are subsequently removed during dicing operations to separate individual dies **104** during singulation.

[0023] FIG. **1**B illustrates a cross-sectional view of the substrate **100** of FIG. **1**A taken along line **1**B-**1**B according to an embodiment described herein. As described above, the kerf areas **108** are regions which are disposed between adjacent dies **104**. It should be noted that the substrate **100** is illustrated as having the microstructures **106** formed on a first side **102** of the substrate **100**. In one embodiment, the microstructures **106** extend a distance of between about 100 um and about 500 um from the first side **102** of the substrate **100**. In one embodiment, the first side **102** is the front side of the substrate **100**. A second side **110** of the substrate **100** exists opposite and parallel to the first side **102**. In the illustrated embodiment, the second side **110** is unprocessed such that no features or microstructures are formed on the second side **110**.

[0024] FIG. **2** illustrates a cross-section view of a vacuum chucking apparatus **200** according to an embodiment described herein. The substrate **100** is illustrated as having the first side **202** contacting the apparatus **200** such that the second side **110** is oriented away from the apparatus **200** in a position suitable for processing the second side **110**.

[0025] The chucking apparatus **200** includes a body **201** having a top surface **202** and a bottom surface **204** oriented opposite the top surface **202**. In one embodiment, the body **201** is formed from a metallic material, such as aluminum, stainless steel, or alloys, combinations, and mixtures thereof. In another embodiment, the body **201** is formed from a ceramic material, such as a silicon nitride material, an aluminum nitride material, an alumina material, or combinations and mixtures thereof. In certain embodiments, a coating is disposed on the top surface **202** of the body **201**. The coating, depending upon the desired implementation, is a polymeric material, such as one or more of a polyimide material, a polyamide material, or a polytetrafluoroethylene (PTFE) material.

[0026] A plurality of cavities **206** are formed in the body **201**. The cavities **206** are disposed within the body **201** and extend into the body **201** from the top surface **202**. The cavities **206** are defined by a bottom surface **203** and sidewalls **205**. A depth of the cavities **206** is between about 100 um and about 1000 um, for example between about 300 um and about 700 um. It is contemplated that the depth of the cavities **206** is sufficient to accommodate the microstructures **106** formed on the substrate **100** such that the microstructures **106** remain out of contact with the body **201** when the substrate **100** is positioned on the chucking apparatus **200**. In one embodiment, the plurality of cavities **206** are formed in a material layer disposed on the body **201**.

[0027] In one embodiment, a shape of the cavities **206** corresponds to a shape of the dies **104**. For example, if the dies **104** are square or rectangular shaped, the shape of the cavities **206** would similarly be square or rectangular in shape. However, it is contemplated that the size of the cavities **206** may be larger or smaller than an area corresponding to the dies **104**.

[0028] The cavities **206** are separated by a plurality of support elements **208** which are part of and extend from the body **201** to the top surface **202** of the body **201**. In addition to separating adjacent cavities **206**, the support elements **208** extend about and surround each of the cavities **206**. The support elements **208** further define the sidewalls **205** of the cavities **206**. In operation, the substrate **100** is positioned on the apparatus **200** such that the kerf areas **108** are aligned with and contact the support elements **208**. In this manner, the dies **104** are aligned with the cavities **206** such that the microstructures **106** remain out of contact with the body **201** of the apparatus **200**.

[0029] A first plurality of ports **210** are formed in the top surface **202** of the body **201**. In one embodiment, the first plurality of ports **210** are positioned on the top surface **202** of the support elements **208**. The first plurality of ports **210** are aligned with the support elements **208** between the cavities **206**. The first plurality of ports **210** are also formed in the top surface **202** of the body radially outward of the plurality of cavities **206**. A first plurality of conduits **212** extend from the first plurality of ports **210** at the top surface

202 through the body **201** to the bottom surface **204**. The first plurality of conduits **212** are coupled to a first vacuum source **214**. Thus, the first vacuum source **214** is in fluid communication with the top surface **202** of the body **201** via the first plurality of conduits **212** and the first plurality of ports **210**.

[0030] In operation, vacuum pressure is generated to chuck the substrate **100** to the body **201** at regions remote from the cavities **206**. It is contemplated that vacuum chucking the substrate **100** to the body **201** is sufficient to achieve desirable substrate flatness for subsequent processing of the unprocessed second side **110** of the substrate.

[0031] FIG. **3**A illustrates a plan view of the vacuum chucking apparatus **200** of FIG. **2** according to an embodiment described herein. The first plurality of ports **210** are disposed over regions corresponding to the support elements **208**. In the illustrated embodiment, the first plurality of ports **210** at the top surface **202** are substantially circular in shape. While circular ports may improve the ease of fabrication of the apparatus **200**, it is contemplated that any port shape may be utilized as described with regard to FIG. **3**B. Although several ports **210** are shown distributed across the top surface **202** of the body **201**, any number, arrangement, or distribution of ports **210** suitable to enable substantially flat chucking of the substrate **100** are contemplated to be within the scope of this disclosure.

[0032] FIG. **3**B illustrates a plan view of the vacuum chucking apparatus **200** of FIG. **2** according to an embodiment described herein. The illustrated ports **210** are irregularly shaped to increase the surface area of the substrate exposed to vacuum relative to the embodiment shown in FIG. **3**A. Any desirable shape may be utilized so long as the ports **210** are aligned with the support elements **208**.

[0033] FIG. **4** illustrates a cross-sectional view of the vacuum chucking apparatus **200** according to an embodiment described herein. In the illustrated embodiment, the apparatus **200** includes a second plurality of ports **404**, a second plurality of conduits **402**, and a second vacuum source **406**. The second plurality of ports **404** are formed in the bottom surface **203** of the cavities **206** and the second plurality of conduits **402** extend from each of the second plurality of ports **404** through the body **201** to the bottom surface **204**. The second plurality of conduits **402** are coupled to the second vacuum source **406** accordingly.

[0034] In operation, the apparatus **200** of FIG. **4** enables differential pressure chucking of the substrate **100**. The first vacuum source **214**, which is in fluid communication with the substrate **100** via the first plurality of conduits **212** and the first plurality of ports **210**, generates a first vacuum pressure to chuck the substrate to the top surface **202** of the body **201**. The second vacuum source **406**, which is in fluid communication with the cavities **206** via the second plurality of conduits **402** and the second plurality of ports **404**, generates a second vacuum pressure to further reduce a pressure with the cavities **206** and reduce or eliminate warpage of the substrate **100** during exposure to the first vacuum pressure. It is contemplated that the first vacuum pressure may be greater than, less than, or equal to the second vacuum pressure, depending upon desired chucking characteristics.

[0035] FIG. **5** illustrates a plan view of the vacuum chucking apparatus **200** of FIG. **4** according to an embodiment described herein. As illustrated, the second plurality of ports **404** are positioned within the cavities **206**. It is contemplated that one or both of the first and second plurality of ports **210**, **404**, may be used in concert with one another or independently to achieve chucking of the substrate **100** to the body **201**. While the second plurality of ports **404** are illustrated as being circular in shape, it is contemplated that various polygonal shapes may be alternately utilized, similar to the first plurality of port shapes illustrated in FIG. **3**B. For example, the second plurality of ports **404** may be annular in shape or a multitude of second ports **404** may be disposed within a single cavity **206**.

[0036] FIG. **6** illustrates a cross-sectional view of an electrostatic chucking apparatus **600** according to an embodiment described herein. Similar to the apparatus **200**, the apparatus **600** includes a body **601** having a top surface **603** and a bottom surface **604** oriented opposite the top surface **603**. In one embodiment, the body **601** is formed from a metallic material, such as aluminum, stainless steel, or alloys, combinations, and mixtures thereof. In another embodiment, the body **601** is formed from a ceramic material, such as a silicon nitride material, an aluminum nitride material, an alumina material, or combinations and mixtures thereof. In certain embodiments, a coating **602** is disposed on the top surface **603** of the body **601**. The coating **602**, depending upon the desired implementation, is a polymeric material, such as one or more of a polyimide material, a polyamide material, or a polytetrafluoroethylene (PTFE) material.

[0037] A plurality of cavities **626** are formed in the body **601**. The cavities **626** are disposed within the body **601** and extend into the body **601** from the top surface **603**. The cavities **626** are defined by a bottom surface **628** and sidewalls **630**. A depth of the cavities **626** is between about 0.5 um and about 1000 um, for example between about 300 um and about 700 um. It is contemplated that the depth of the cavities **626** is sufficient to accommodate the microstructures **106** formed on the substrate **100** such that the microstructures **106** remain out of contact with the body **601** when the substrate **100** is positioned on the chucking apparatus **600**.

[0038] The coating **602** extends along the top surface **603** of the body **601** and over the sidewalls **630** and bottom surface **628** of the cavities **626**. Similarly, the coating **602** extends over support members **608** which define the sidewalls **630** of the cavities **626**. A thickness of the coating **602** is contemplated to be sufficient to enable electrostatic chucking of the substrate **100** to the body **601**. As such, the coating **602** is believed to influence an electrostatic force applied to the substrate **100** via electrode assemblies **612**, **614**.

[0039] A first electrode assembly **612** is disposed within the body **601** adjacent the top surface **603** of the body **601**. The first electrode assembly **612** includes one or more leads coupled to a first power source **620**. In one embodiment, the first electrode assembly **612** is a single lead. Alternatively, the first electrode assembly **612** includes multiple leads. In this embodiment, the leads of the first electrode assembly **612** may be disposed in an interleaving arrangement. The first power source **620** is configured to deliver power of a desired polarity to the first electrode assembly **612**. In one embodiment, the first power source **620** delivers a current with positive polarity to the first electrode assembly **612**. In another embodiment, the first power source **620** delivers a current with negative polarity to the first electrode assembly **612**.

[0040] A second electrode assembly **614** is disposed within the body **601** adjacent the bottom surface **628** of the cavities **626**. Similar to the first electrode assembly **612**, the second electrode assembly **614** includes one or more leads. In one embodiment, the second electrode assembly **614** is a single lead. In another embodiment, the second electrode assembly **614** includes multiple leads. In this embodiment, the leads of the second electrode assembly **614** may be disposed in an interleaving arrangement. The second electrode assembly **614** is coupled to a second power source **622** which is configured to deliver power of a desired polarity to the second electrode assembly **614**. In one embodiment, the second power source **622** delivers a current with a positive polarity to the second electrode assembly **614**. In another embodiment, the second power source **622** delivers a current with negative polarity to the second electrode assembly **614**.

[0041] In one embodiment, the first power source **620** and second power source **622** deliver current having the same polarity to the first and second electrode assemblies **612**, **614**, respectively. Alternatively, the first power source **620** and the second power source **622** deliver current having different polarities to the first and second electrode assemblies **612**, **614**, respectively.

[0042] The first electrode assembly **612** is disposed in the body **601** at a first plane **616**. The second electrode assembly **614** is disposed in the body **601** at a second plane **618**. In one embodiment, the first plane **616** is disposed closer to the top surface **603** than the second plane **618**. In another embodiment, both of the first electrode assembly **612** and the second electrode assembly **614** are disposed in the second plane **618**. By positioning the electrode assemblies **612**, **614** with in the body **601** according to the embodiments described above, differential electrostatic chucking of the substrate **100** may be achieved in regions of the support elements **608** and the cavities **626**. Accordingly, substrate flatness may be tuned across the substrate **100** during electrostatic chucking.

[0043] While the apparatus **200**, **600** described above relate to vacuum and electrostatic chucking, respectively, it is contemplated that other substrate positioning apparatus, such as clamp rings, edge rings, shadow rings, and the like may also find advantageous implementation in accordance with the embodiments described herein. The substrate positioning apparatus may be used alone or in combination with the vacuum and electrostatic chucking capabilities of the apparatus **200**, **600**.

[0044] In summation, a substrate chucking apparatus having cavities formed therein enables chucking of substrates with surfaces having microstructures formed thereon for dual sided substrate processing. The chucking apparatus include various vacuum or electrostatic chucking elements as described above and a chucking body topography selected to support kerf areas of a substrate during processing.

[0045] While the foregoing is directed to embodiments of the present disclosure, other and further embodiments of the disclosure may be devised without departing from the basic scope thereof, and the scope thereof is determined by the claims that follow.

What is claimed is:

1. A substrate chucking apparatus, comprising:

a body having a top surface and a bottom surface opposite the top surface, the body having a plurality of cavities formed therein and recessed from the top surface, the body also having a plurality of support elements separating the plurality of cavities extending from the body to the top surface, and the body also having a plurality of ports formed therein and extending from the top surface to the bottom surface through one or more of the plurality of support elements; and

a conduit in fluid communication with each of the plurality of ports.

2. The apparatus of claim **1**, wherein the body is a metallic material.

3. The apparatus of claim **2**, wherein the metallic material is an aluminum material, a stainless steel material, or alloys, combinations, and mixtures thereof.

4. The apparatus of claim **1**, wherein the body is a ceramic material.

5. The apparatus of claim **4**, wherein the ceramic material is a silicon nitride material, an aluminum nitride material, an alumina material, or combinations and mixtures thereof.

6. The apparatus of claim **3**, further comprising a polymeric material disposed on the body wherein the polymeric material is selected from the group consisting of a polyimide material, a polyamide material, and a polytetrafluoroethylene material.

7. The apparatus of claim **5**, further comprising a polymeric material disposed on the body wherein the polymeric material is selected from the group consisting of a polyimide material, a polyamide material, and a polytetrafluoroethylene material.

8. A substrate chucking apparatus, comprising:

a body having a top surface and a bottom surface opposite the top surface, the body having a plurality of cavities formed therein and recessed from the top surface, the body also having a plurality of support elements separating the plurality of cavities extending from the body to the top surface, the body having a first plurality of ports formed therein and extending from the top surface to the bottom surface through one or more of the plurality of support elements, and the body having a second plurality of ports formed therein and extending from a bottom surface of each of the plurality of cavities to the bottom surface of the body;

a first conduit in fluid communication with each of the first plurality of ports; and

a second conduit in fluid communication with each of the second plurality of ports.

9. The apparatus of claim **8**, wherein the body is a metallic material.

10. The apparatus of claim **9**, wherein the metallic material is an aluminum material, a stainless steel material, or alloys, combinations, and mixtures thereof.

11. The apparatus of claim **8**, wherein the body is a ceramic material.

12. The apparatus of claim **11**, wherein the ceramic material is a silicon nitride material, an aluminum nitride material, an alumina material, or combinations and mixtures thereof.

13. The apparatus of claim **9**, further comprising a polymeric material disposed on the body wherein the polymeric material is selected from the group consisting of a polyimide material, a polyamide material, and a polytetrafluoroethylene material.

14. The apparatus of claim **11**, further comprising a polymeric material disposed on the body wherein the polymeric material is selected from the group consisting of a polyimide material, a polyamide material, and a polytetrafluoroethylene material.

15. A substrate chucking apparatus, comprising:

a body having a top surface and a bottom surface opposite the top surface, the body having a plurality of cavities formed therein and recessed from the top surface, the body having a plurality of support elements separating the plurality of cavities extending from the body to the top surface, the body having a first electrode assembly disposed adjacent the top surface of the body and within each of the plurality of support elements, and the body having a second electrode assembly disposed adjacent each of the plurality of cavities; and

a polymeric coating disposed on the top surface of the body, the plurality of support elements, and within the plurality of cavities.

* * * * *