US 20230123795A1

(19) **United States**

(12) **Patent Application Publication**

LEI et al.

(10) **Pub. No.: US 2023/0123795 A1**

(43) **Pub. Date: Apr. 20, 2023**

(54) **SINGULATION OF OPTICAL DEVICES FROM OPTICAL DEVICE SUBSTRATES VIA LASER ABLATION**

(71) Applicant: **Applied Materials, Inc.**, Santa Clara, CA (US)

(72) Inventors: **Wei-Sheng LEI**, San Jose, CA (US); **Zhengping YAO**, Cupertino, CA (US); **Mahendran CHIDAMBARAM**, Saratoga, CA (US); **Kangkang WANG**, San Jose, CA (US); **Zhihong John LIN**, Sunnyvale, CA (US); **Ludovic GODET**, Sunnyvale, CA (US); **Visweswaren SIVARAMAKRISHNAN**, Cupertino, CA (US)

(21) Appl. No.: **17/945,861**

(22) Filed: **Sep. 15, 2022**

Related U.S. Application Data

(60) Provisional application No. 63/256,415, filed on Oct. 15, 2021.

Publication Classification

(51) **Int. Cl.**

B23K 26/364 (2006.01)

B23K 26/0622 (2006.01)

(52) **U.S. Cl.**

CPC ***B23K 26/364*** (2015.10); ***B23K 26/0624*** (2015.10); *B23K 2103/50* (2018.08)

(57) **ABSTRACT**

A method and apparatus for dicing optical devices from a substrate are described herein. The method includes the formation of a plurality of trenches using radiation pulses delivered to the substrate. The radiation pulses are delivered in a pattern to form trenches with varying depth as the trenches extend outward from a top surface of the optical device. The varying depth of the trenches provides edges of each of the optical devices which are slanted. The radiation pulses are UV radiation pulses and are delivered in bursts around the silhouette of the optical devices.

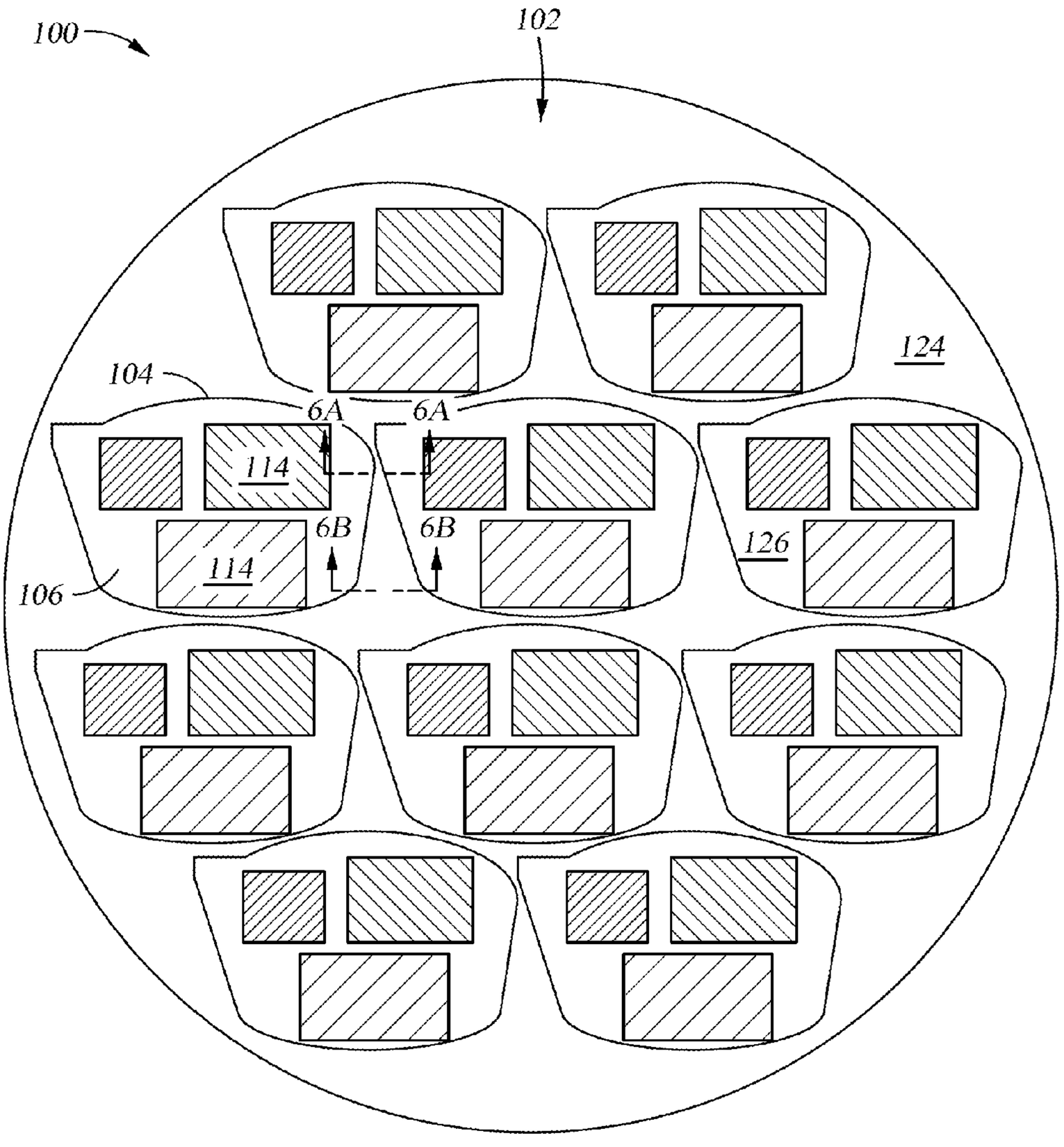

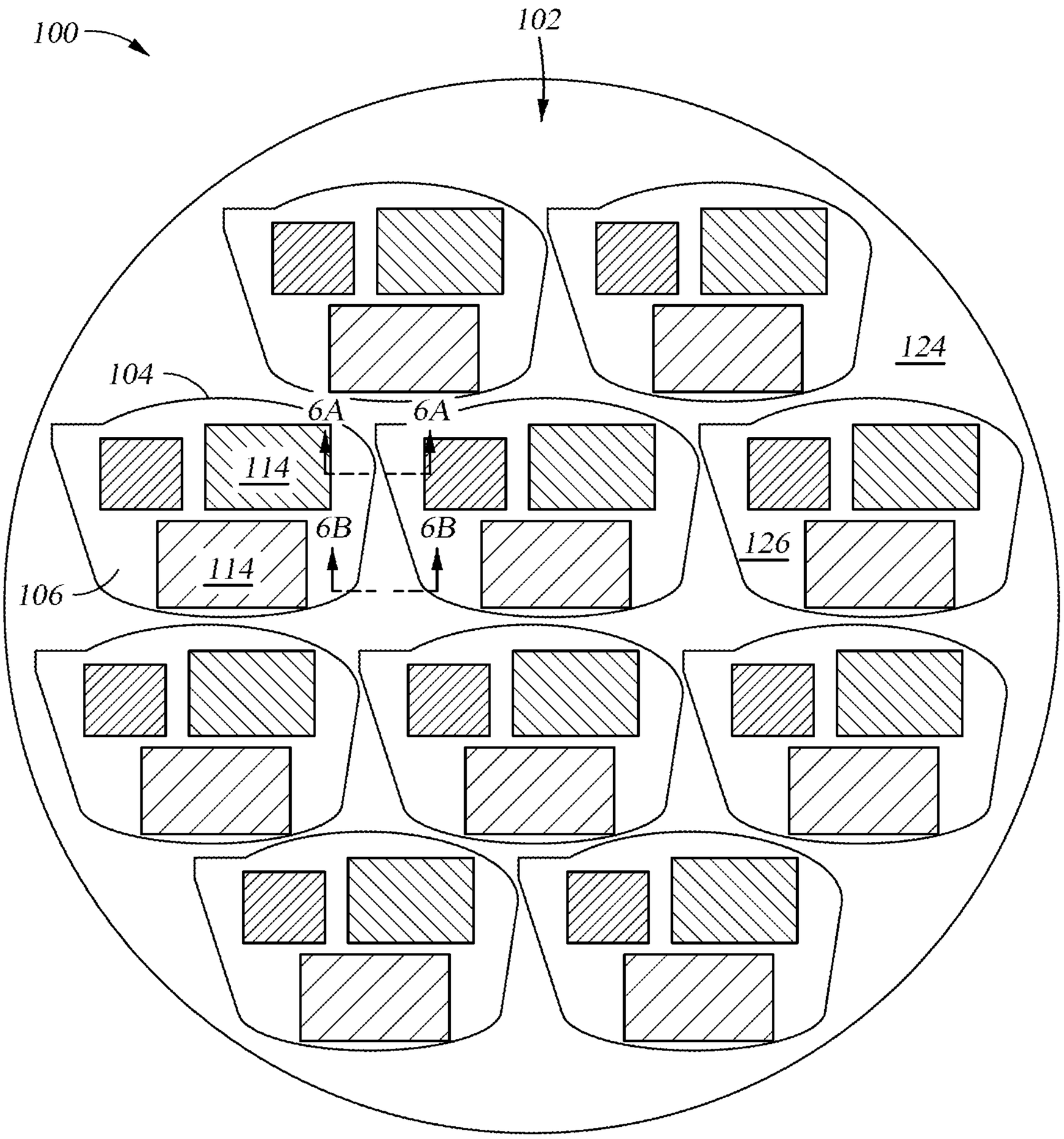

Fig. 1

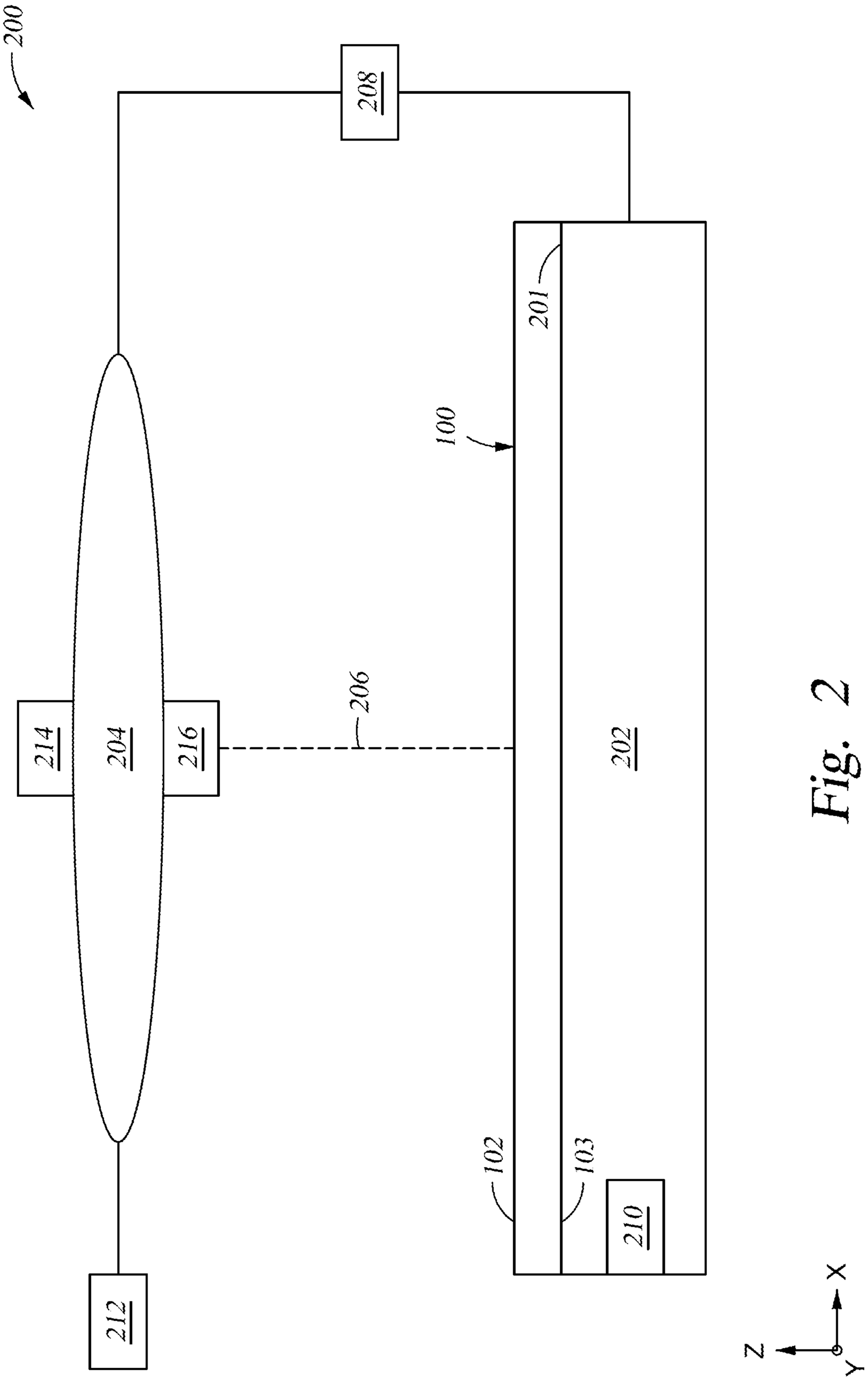

Fig. 2

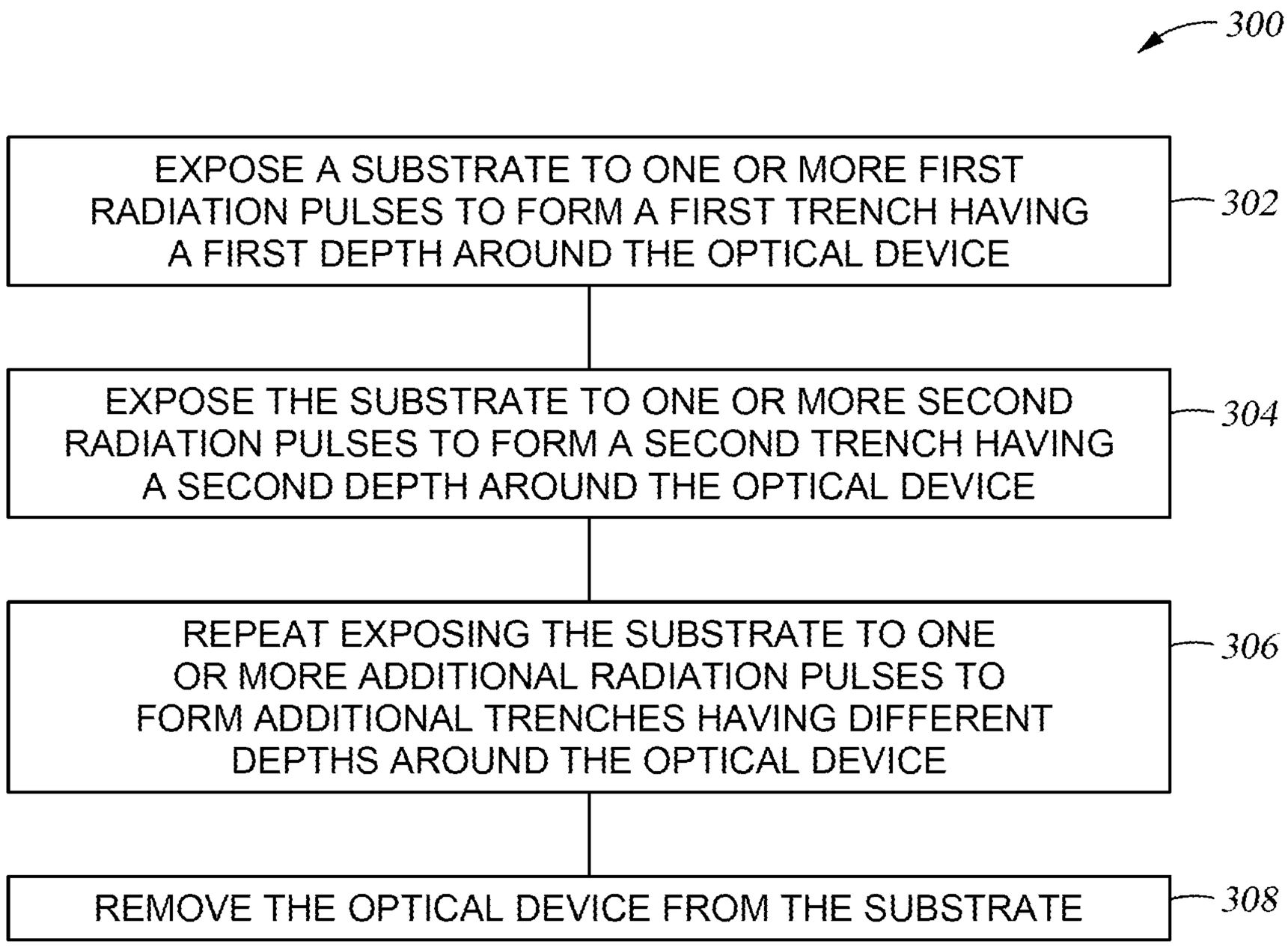
300
EXPOSE A SUBSTRATE TO ONE OR MORE FIRST RADIATION PULSES TO FORM A FIRST TRENCH HAVING A FIRST DEPTH AROUND THE OPTICAL DEVICE
302
EXPOSE THE SUBSTRATE TO ONE OR MORE SECOND RADIATION PULSES TO FORM A SECOND TRENCH HAVING A SECOND DEPTH AROUND THE OPTICAL DEVICE
304
REPEAT EXPOSING THE SUBSTRATE TO ONE OR MORE ADDITIONAL RADIATION PULSES TO FORM ADDITIONAL TRENCHES HAVING DIFFERENT DEPTHS AROUND THE OPTICAL DEVICE
306
REMOVE THE OPTICAL DEVICE FROM THE SUBSTRATE
308

Fig. 3

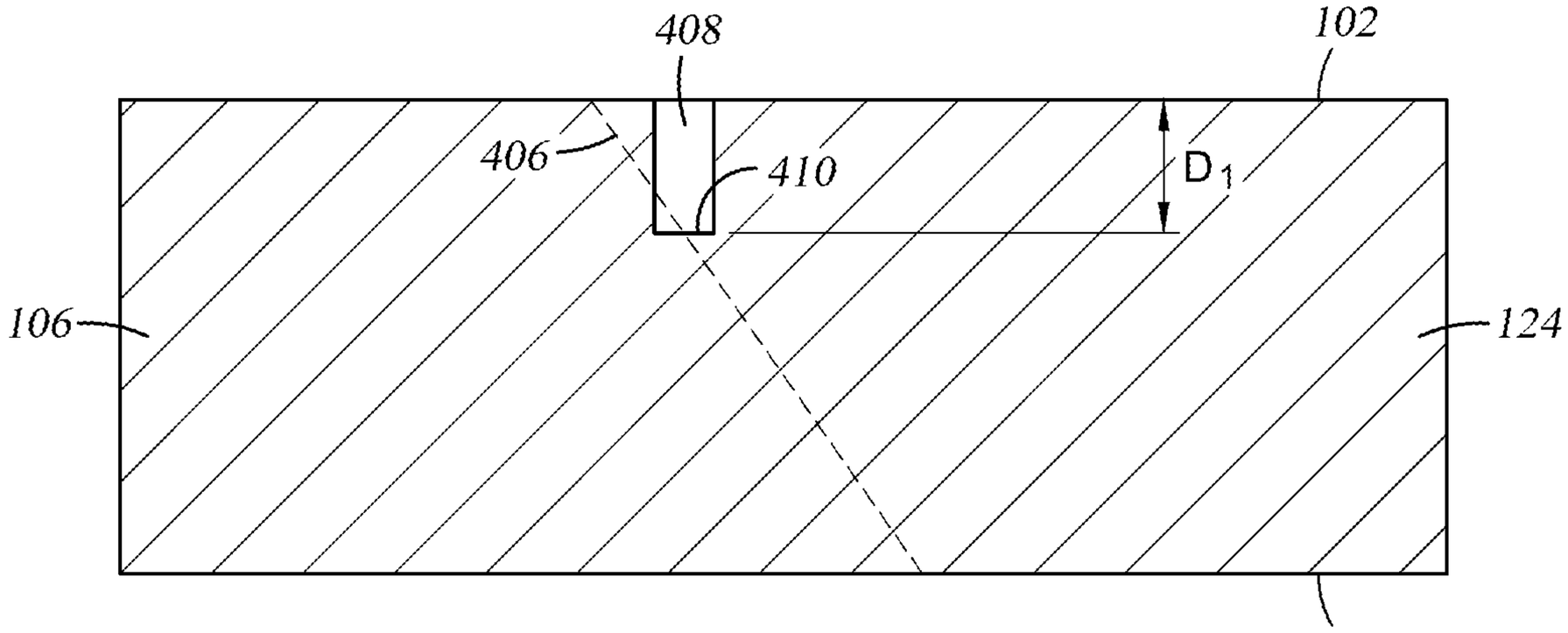

Fig. 4A

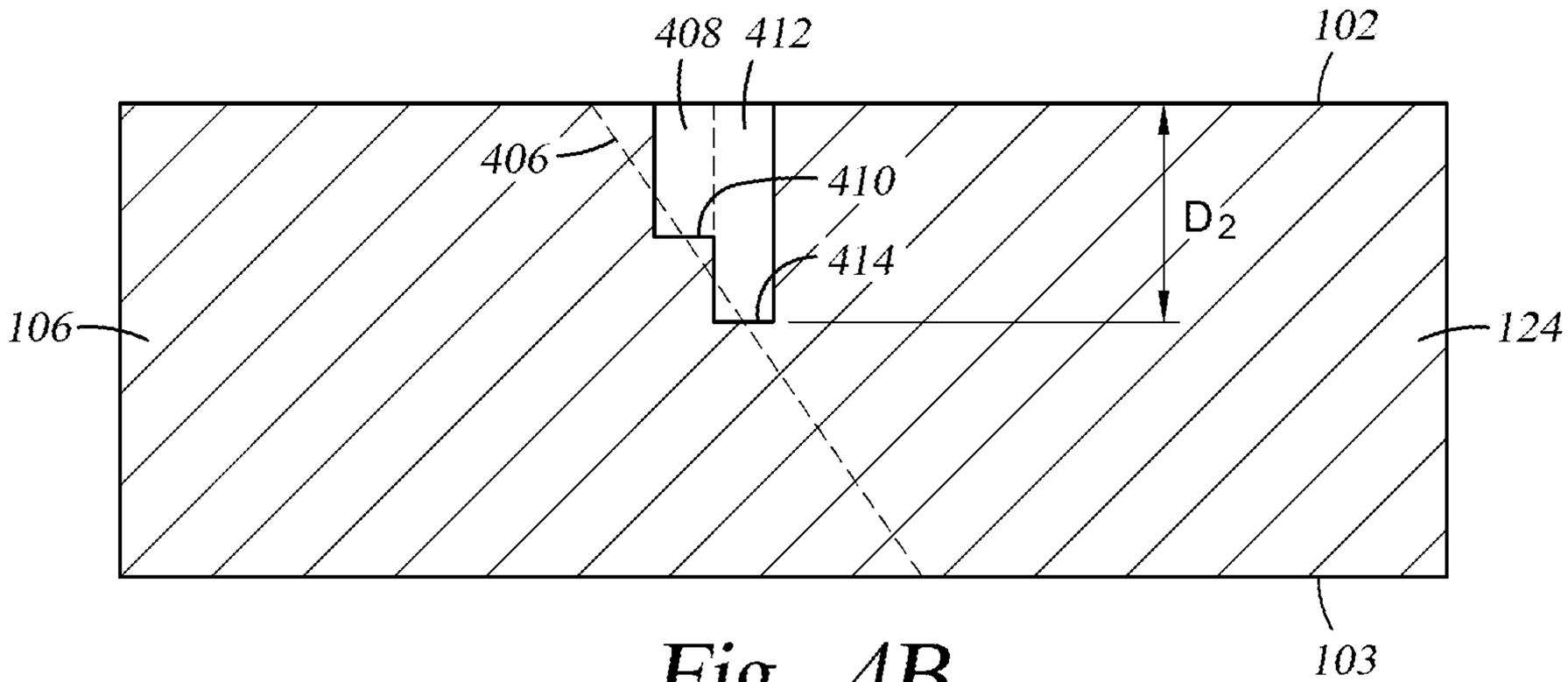

Fig. 4B

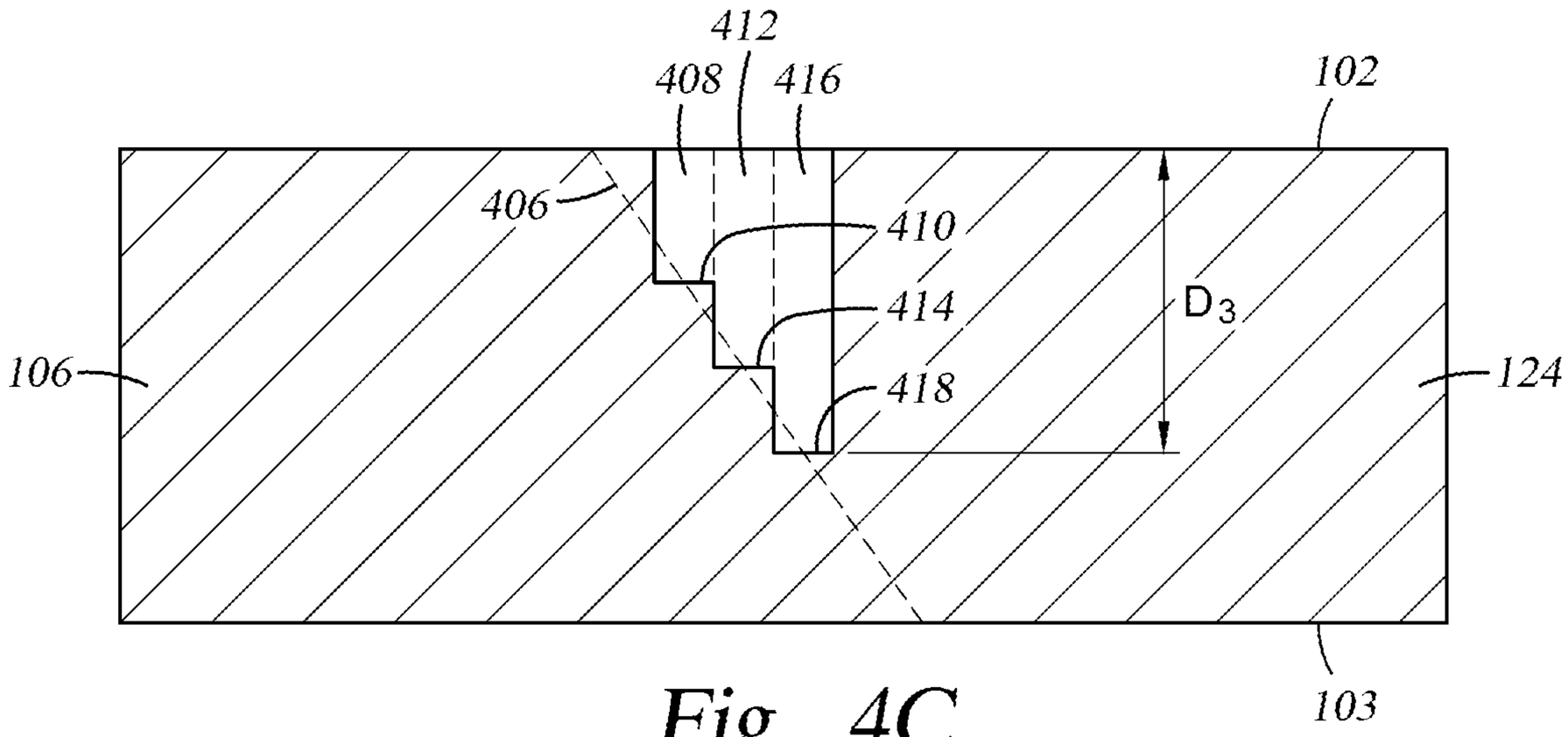

Fig. 4C

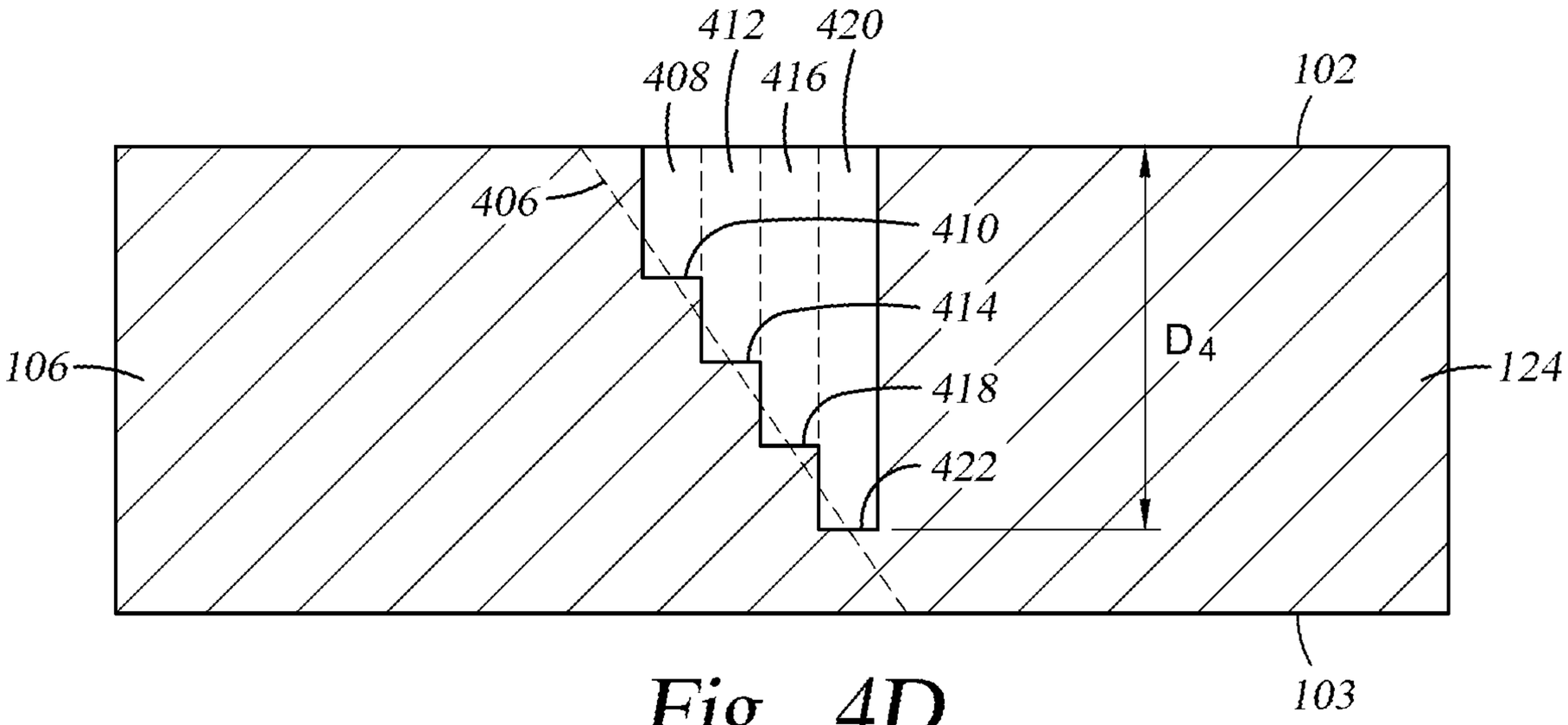
412
420
408
416
102
406
410
414
106
D4
124
418
422
103

Fig. 4D

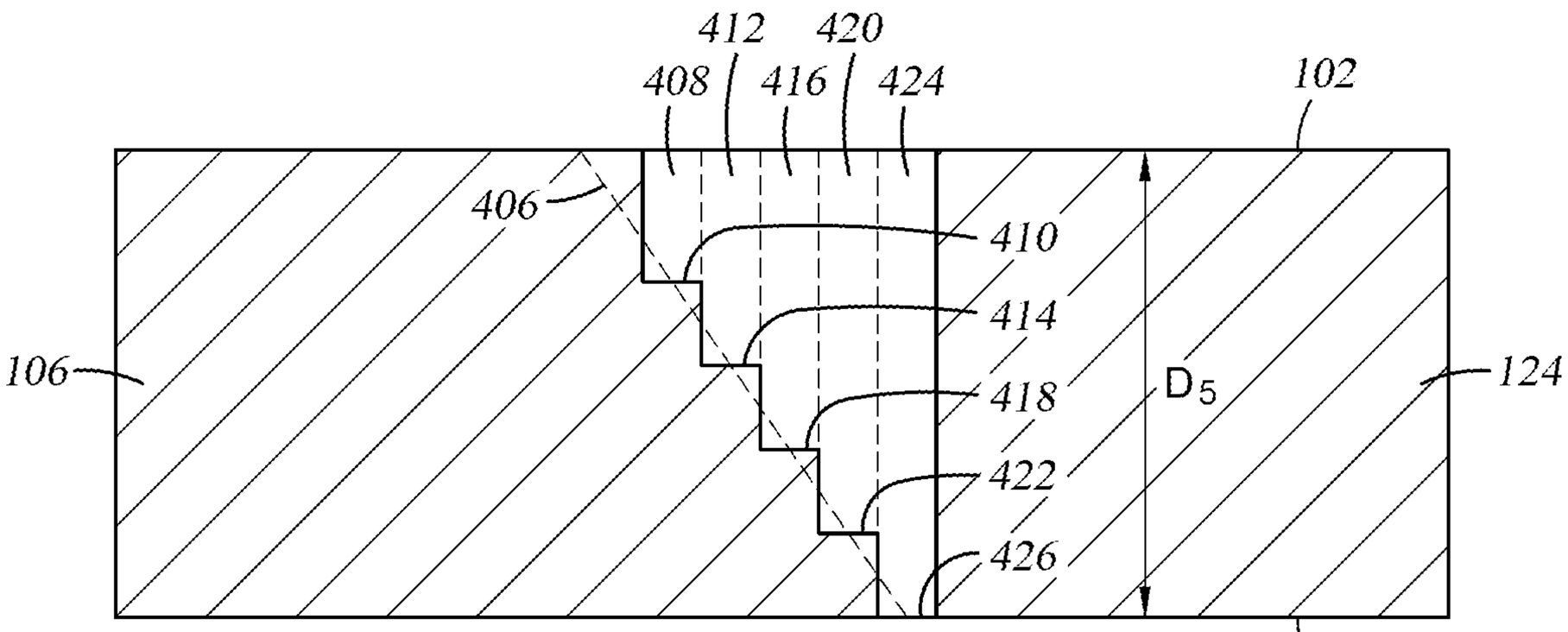
412
420
408
416
424
102
406
410
414
106
D5
124
418
422
426
103

Fig. 4E

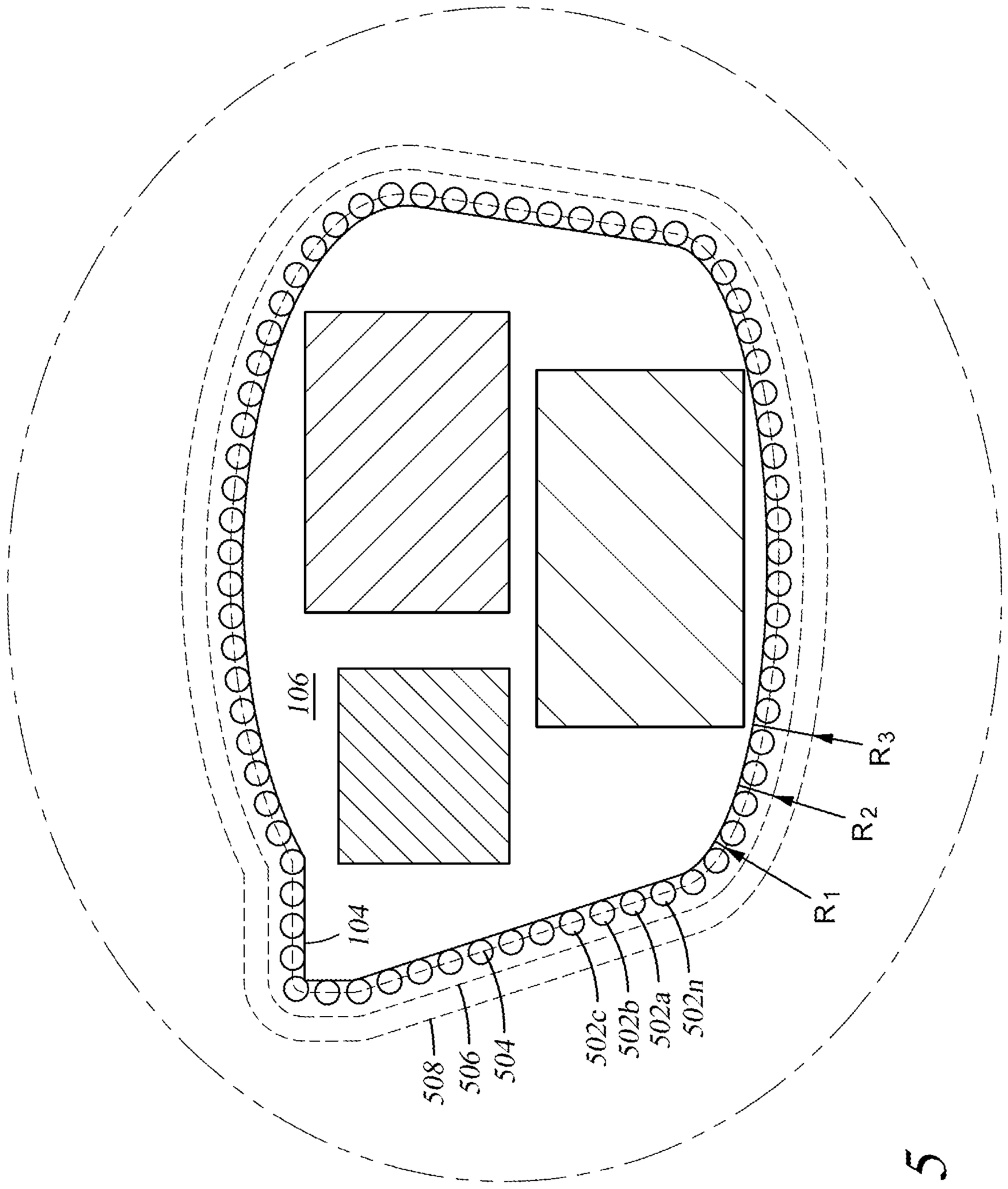

Fig. 5

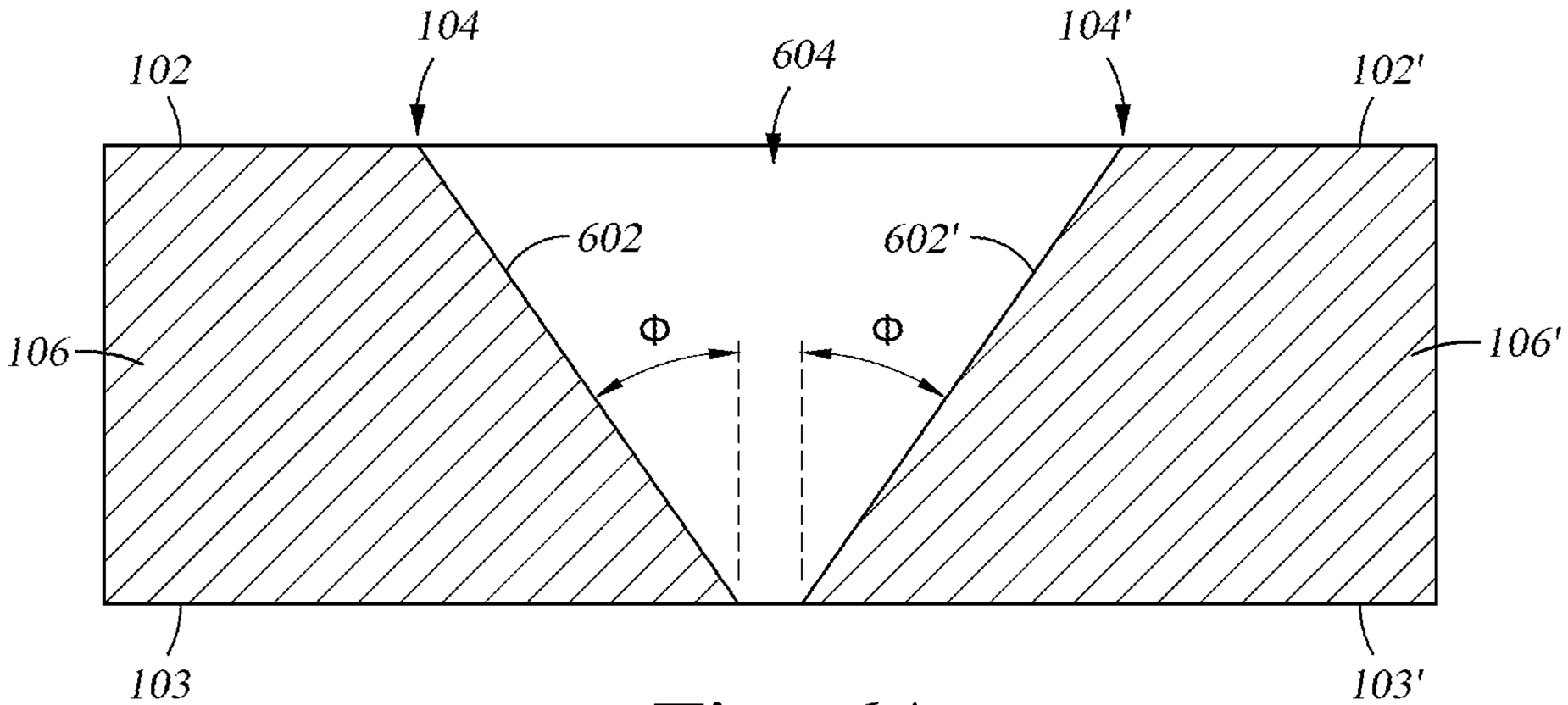

Fig. 6A

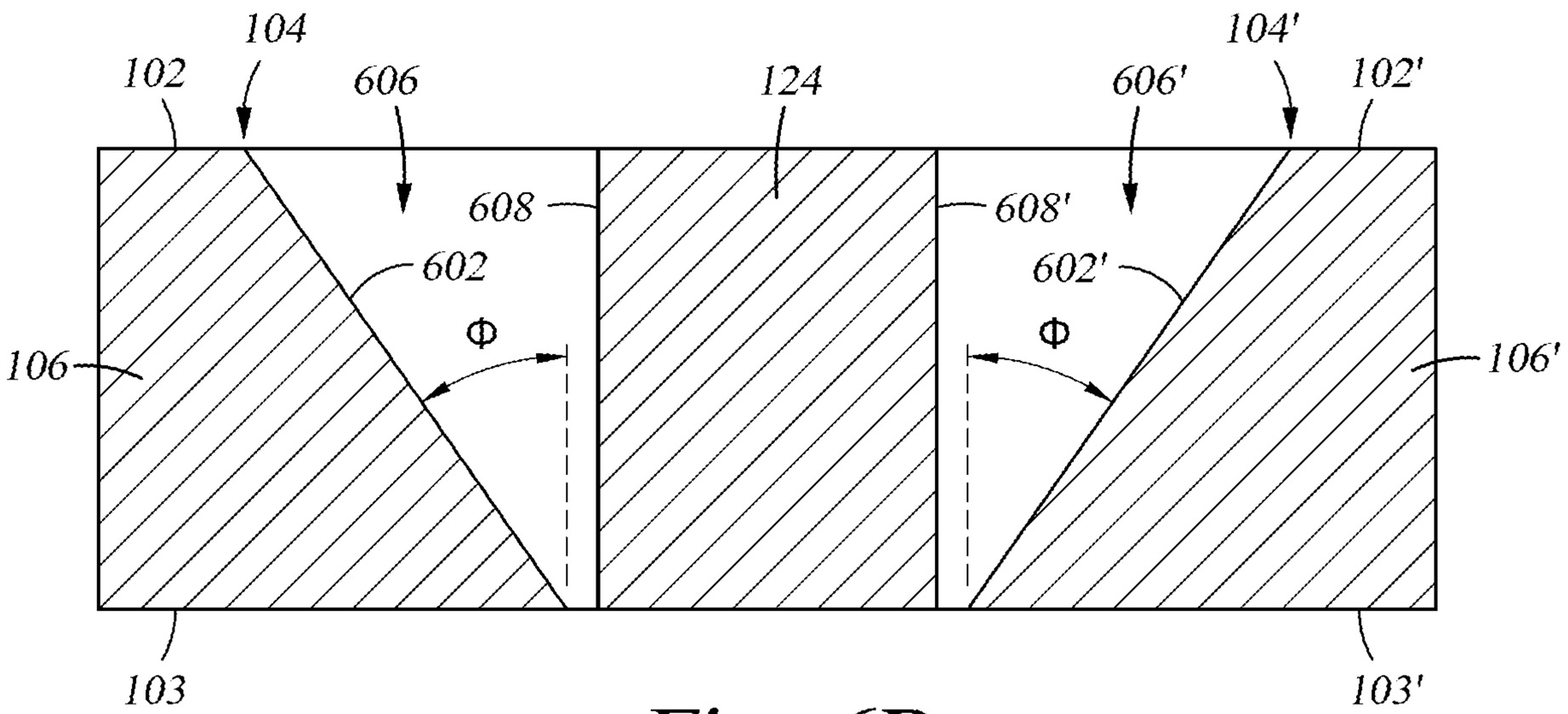

Fig. 6B

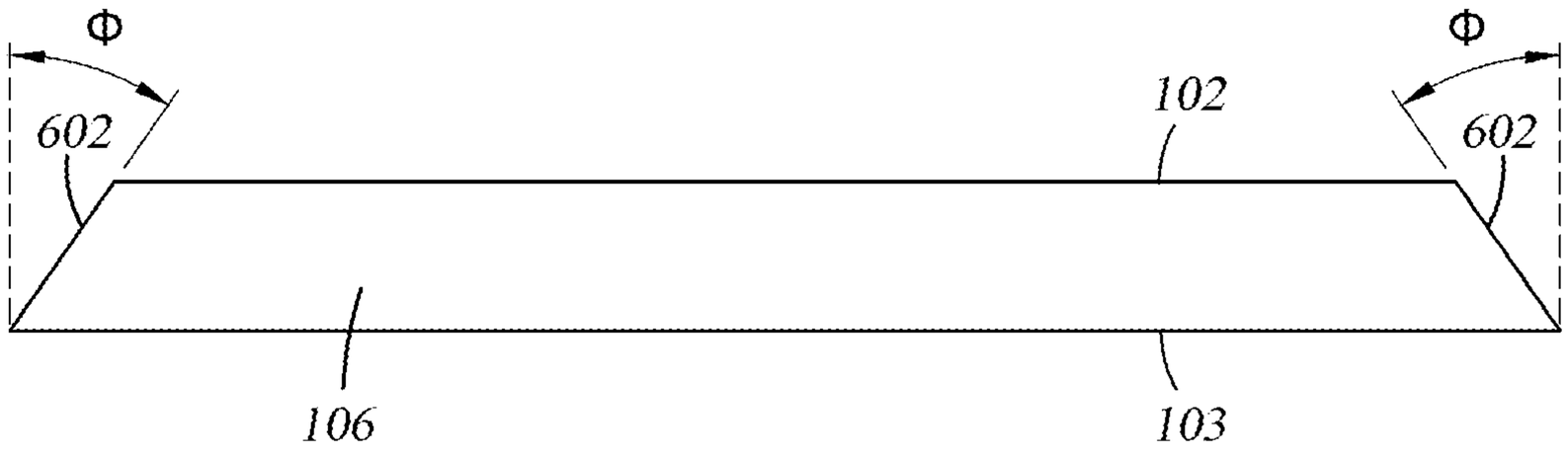

Fig. 7

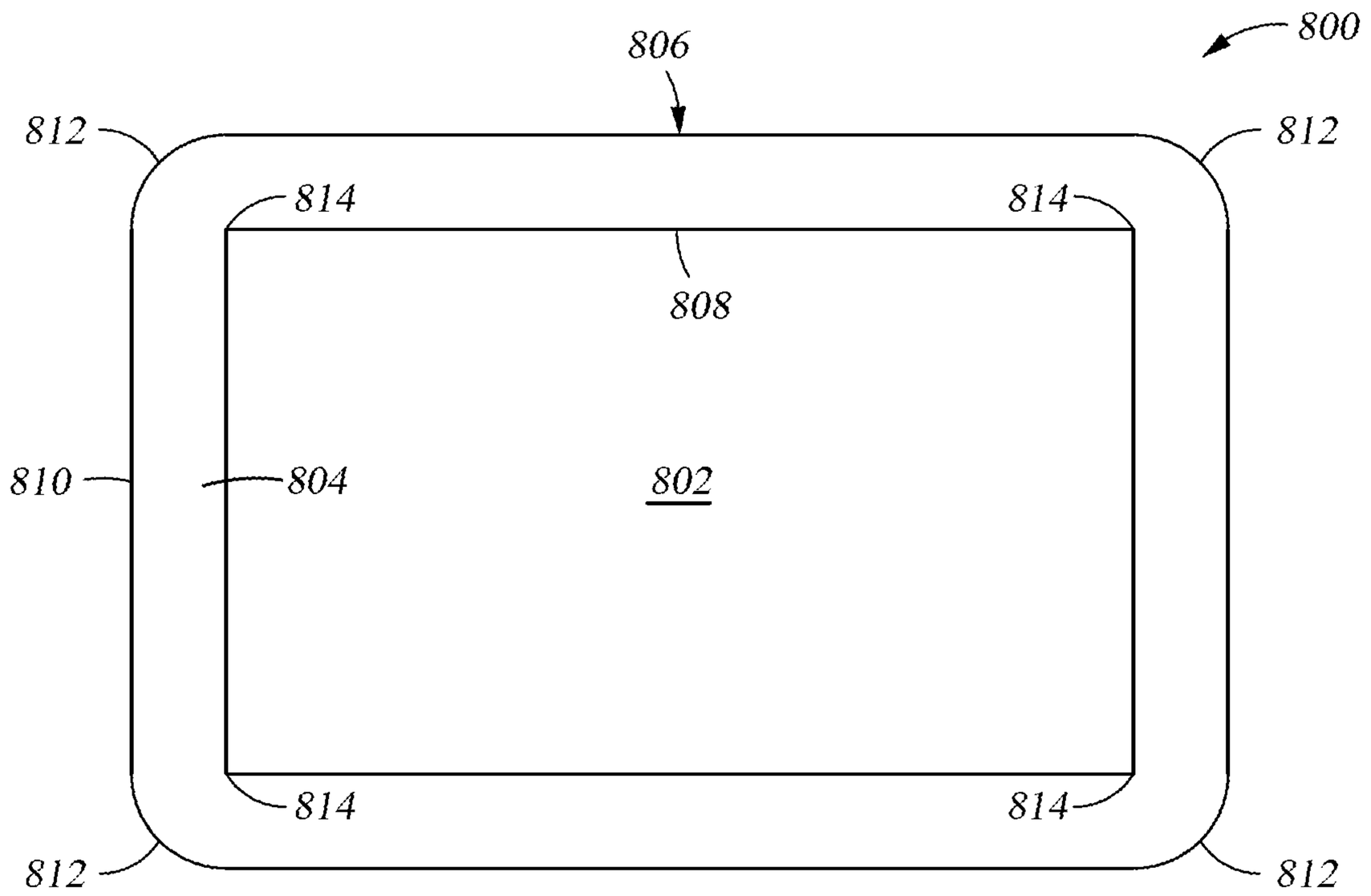
800
806
812
812
814
814
808
810
804
802
814
814
812
812

Fig. 8A

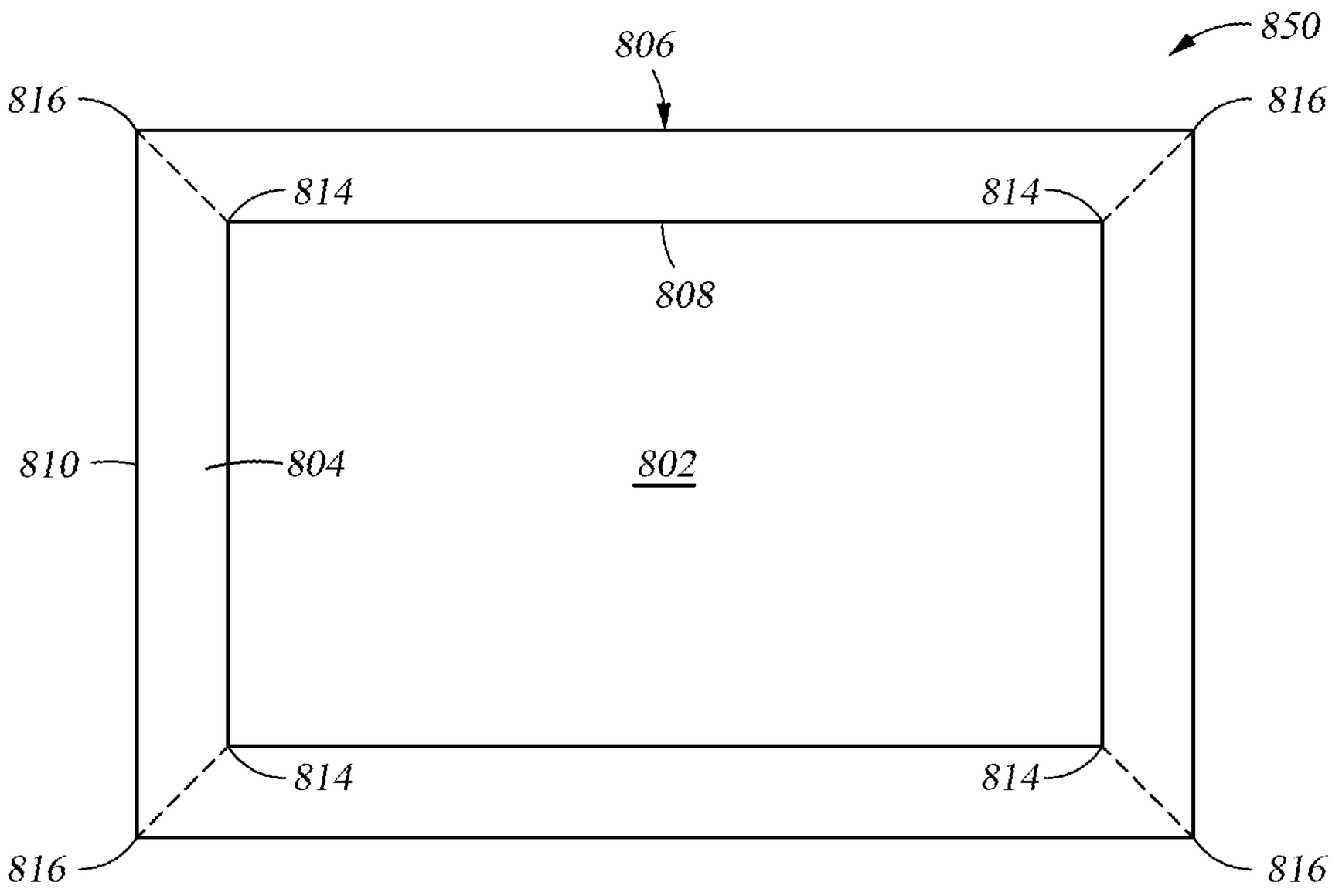
850
806
816
816
814
814
808
810
804
802
814
814
816
816

Fig. 8B

SINGULATION OF OPTICAL DEVICES FROM OPTICAL DEVICE SUBSTRATES VIA LASER ABLATION

CROSS-REFERENCE TO RELATED APPLICATIONS

[0001] This application claims the benefit of U.S. Provisional Patent Application Ser. No. 63/256,415, filed Oct. 15, 2021, which is incorporated by reference herein in its entirety.

BACKGROUND

Field

[0002] Embodiments of the present disclosure generally relate to optical devices. Specifically, embodiments of the present disclosure relates to a method for dicing one or more optical devices from a substrate with a laser machining system.

Description of the Related Art

[0003] Virtual reality (VR) is generally considered to be a computer generated simulated environment in which a user has an apparent physical presence. A VR experience can be generated in 3D and viewed with a head-mounted display (HMD), such as glasses or other wearable display devices that have near-eye display panels as lenses to display a VR environment that replaces an actual environment.

[0004] Augmented reality (AR), however, enables an experience in which a user can still see through the display lenses of the glasses or other HMD device to view the surrounding environment, yet also see images of virtual objects that are generated for display and appear as part of the environment. AR can include any type of input, such as audio and haptic inputs, as well as virtual images, graphics, and video that enhances or augments the environment that the user experiences. In order to achieve an AR experience, a virtual image is overlaid on an ambient environment, with the overlaying performed by optical devices.

[0005] Multiple optical devices are fabricated on a substrate and then diced prior to use on VR and AR devices. Conventional methods of dicing optically transparent materials such as glass and silicon carbide (SiC) substrates include laser ablation cutting or filamentation. During the methods for dicing one or more optical devices from a substrate, it is critical to accurately dice the optical devices from the substrate to retain the quality of the optical devices. The optical devices, generally including high bandgap materials, are brittle and sensitive to thermal or mechanical stresses. Further, the draft angle of the sidewall of each optical device has been found to influence the performance of the device. Attempts to form a draft angle using filamentation processes or laser waterjet dicing are difficult.

[0006] Accordingly, there is a need for a method for dicing one or more optical devices from a substrate with a laser machining system which enable angled sidewalls.

SUMMARY

[0007] The present disclosure generally relates to methods of dicing optical devices from a substrate. In one embodiment, a method of dicing an optical device from a substrate includes forming a first trench by exposing the substrate to one or more first radiation pulses around a circumference of the optical device, forming a second trench by exposing the substrate to one or more second radiation pulses around the circumference of the optical device, and forming one or more additional trenches by exposing the substrate to one or more additional radiation pulses around the circumference of the optical device. The first trench has a first depth. The second trench has a second depth greater than the first depth. The second trench is concentric about the first trench. Each additional trench of the one or more additional trenches has a depth greater than a previous depth of a previously formed trench. Each subsequently formed additional trench is concentric about a previously formed additional trench.

[0008] In another embodiment, a method of dicing one or more optical devices within a substrate is described. The method includes forming a first tapered edge around a first optical device by forming a plurality of trenches around the first optical device using one or more bursts of radiation pulses. The plurality of trenches vary in depth from a top surface of the substrate. A second tapered edge is formed around a second optical device by forming a plurality of trenches around the second optical device using one or more bursts of radiation pulses. The plurality of trenches vary in depth from the top surface of the substrate. The first optical device and the second optical device are removed from the substrate after forming the first tapered edge and the second tapered edge.

[0009] In yet another embodiment, a non-transitory computer-readable medium is described. The non-transitory computer-readable medium stores instructions that, when executed by a processor, cause a computer system to perform the steps of: forming a tapered edge around a first optical device. The tapered edge is formed by instructing a laser source to deliver one or more first radiation pulses to a substrate around a circumference of the first optical device to form a first trench. The first trench has a first depth and the substrate is disposed on a stage. One or both of the stage and the laser source are instructed to move during delivery of the first radiation pulses. The laser source is further instructed to deliver one or more second radiation pulses to the substrate around the circumference of the first optical device to form a second trench. The second trench has a second depth greater than the first depth and the second trench is formed radially outward of the first trench. One or both of the stage and the laser source are instructed to move during delivery of the first radiation pulses. The laser source is further instructed to deliver one or more additional radiation pulses to the substrate around the circumference of the first optical device to form one or more additional trenches. Each additional trench of the one or more additional trenches has a depth greater than a previous depth of a previously formed trench. Each subsequently formed additional trench is concentric about a previously formed additional trench. One or both of the stage and the laser source are instructed to move during delivery of the one or more additional radiation pulses.

BRIEF DESCRIPTION OF THE DRAWINGS

[0010] So that the manner in which the above recited features of the present disclosure can be understood in detail, a more particular description of the disclosure, briefly summarized above, may be had by reference to embodiments, some of which are illustrated in the appended drawings. It is to be noted, however, that the appended drawings illustrate only typical embodiments of this disclosure and are there-

fore not to be considered limiting of its scope, for the disclosure may admit to other equally effective embodiments.

[0011] FIG. **1** is a schematic top-view of a substrate according to embodiments.

[0012] FIG. **2** is a schematic cross-sectional view of a laser machining system according to embodiments.

[0013] FIG. **3** is a flow diagram of a method for dicing one or more optical devices from a substrate according to embodiments.

[0014] FIGS. **4**A-**4**E are schematic cross-sectional views of an optical device during the method of FIG. **3** according to embodiments.

[0015] FIG. **5** is a schematic plan view an optical device from a substrate according to embodiments.

[0016] FIGS. **6**A and **6**B are schematic cross-sectional views of an optical device after dicing according to embodiments.

[0017] FIG. **7** is a schematic side view of an optical device of the one or more optical devices after dicing according to embodiments.

[0018] FIGS. **8**A and **8**B are schematic plan views of optical devices after dicing according to embodiments.

[0019] To facilitate understanding, identical reference numerals have been used, where possible, to designate identical elements that are common to the figures. It is contemplated that elements and features of one embodiment may be beneficially incorporated in other embodiments without further recitation.

DETAILED DESCRIPTION

[0020] Embodiments of the present disclosure generally relate to optical devices. Specifically, embodiments of the present disclosure relates to a method for dicing one or more optical devices from a substrate with a laser machining system. The laser machining system applies a plurality of radiation pulses to a substrate and forms a plurality of trenches around the edge of each optical device within the substrate. Each of the trenches are formed with varying depths and radial positions relative to one another, such that they enable the formation of a slanted outer surface of each optical device. Different draft angles may be desirable for different optical devices to improve certain optical qualities of the optical device.

[0021] By utilizing radiation pulses to form trenches at different depths, the outer surface of each optical device may be slanted to a desired draft angle by varying the number, length, or power of the radiation pulses applied to form each trench. With decreased radiation beam widths and an increased number of radiation beams, low roughness outer surfaces may be obtained along the slanted outer surfaces.

[0022] FIG. **1** is a schematic, top-view of a substrate **100**. The substrate **100** includes a top surface **102** and a bottom surface **103** (FIG. **2**) opposite the top surface **102**. The substrate **100** includes one or more optical devices **106**, disposed on the top surface **102** and/or the bottom surface **103** of the substrate. The one or more optical devices **106** can include structures **114** (i.e., fins) having sub-micron critical dimensions, e.g., nano-sized critical dimensions.

[0023] The substrate **100** may be formed from any suitable material, provided that the substrate **100** can adequately transmit or absorb light in a desired wavelength or wavelength range and can serve as an adequate support for the one or more optical devices **106**. Substrate selection may include any suitable material, including, but not limited to, amorphous dielectrics, crystalline dielectrics, aluminum nitride, silicon oxide, silicon carbide, polyhedral oligomeric silsesquioxane (POSS), or combinations thereof. In some embodiments, which can be combined with other embodiments described herein, the substrate **100** include a transparent material. Suitable examples may include an oxide, sulfide, phosphide, telluride, or combinations thereof. In some embodiments, the substrate is formed from one or a combination of silicon, silicon carbide, silicon oxide, or aluminum nitride. Additionally, the substrate **100** may be varying shapes, thicknesses, and diameters. For example, the substrate **100** may have a diameter of about 150 mm to about 300 mm. The substrate **100** may have a circular, rectangular, or square shape. The substrate **100** may have a thickness of between about 300 μm to about 1 mm. The bandgap of the material of the substrate is about 5 eV to about 12 eV, such as about 6 eV to about 10 eV, such as about 8 eV to about 10 eV, such as about 9.2 eV.

[0024] It is to be understood that the one or more optical devices **106** described herein are exemplary optical devices. In one embodiment, which can be combined with other embodiments described herein, an optical device of the one or more optical devices **106** is a waveguide combiner, such as an augmented reality waveguide combiner. In another embodiment, which can be combined with other embodiments described herein, an optical device of the one or more optical devices **106** is a flat optical device, such as a metasurface.

[0025] Each optical device **106** of the one or more optical devices **106** includes a dicing path **104**. The dicing path **104** is disposed around the exterior edge of each optical device **106**. The dicing path **104** is the desired dicing path for a laser (shown in FIG. **2**) to travel along during the method **300** (FIG. **3**) such that the quality of the optical device **106** is maintained. Although only ten optical devices **106** are shown on the substrate **100**, any number of optical devices **106** may be disposed on the substrate **100**. The portion of the substrate **100** which corresponds to each of the optical devices **106** is an optical device portion **126**. The portion of the substrate **100** which is outside of the optical device portions **126** is an outer portion **124**. During the method described herein, the optical device portions **126** forming each of the optical devices **106** are separated from the outer portion **124** of the substrate **100** along the dicing paths **104**. The optical devices **106** may be separated via mechanical or thermal separation.

[0026] FIG. **2** is a schematic, cross-sectional view of a laser machining system **200**. The laser machining system is utilized in a method **300** for dicing one or more optical devices from a substrate **100** with the laser machining system **200**.

[0027] The laser machining system **200** includes a substrate **100** disposed on a surface **201** of a stage **202**. The stage **202** is disposed in the laser machining system **200** such that the surface **201** of the stage **202** is positioned opposite a scanner **204**. The scanner **204** includes a laser source **214**, an optical array **216**, and a laser **206** disposed from the optical array **216**. The laser machining system **200** is operable to dice the one or more optical devices **106** from the substrate **100** along the dicing path **104**. The laser machining system **200** includes a controller **208**. The controller **208** is in communication with the stage **202** and the scanner **204**.

[0028] The laser machining system **200** is operable to dice one or more optical devices **106** from a substrate **100**. In one embodiment, which can be combined with other embodiments described herein, the laser machining system **200** is operable to utilize laser ablation to dice the one or more optical devices **106** from the substrate **100**. Laser ablation includes supplying a radiation pulse from the laser source **214**. The radiation pulse passes through the optical array **216** and is focused into the laser **206**. The laser **206** etches a hole or a void in the substrate **100** through the thickness of the substrate **100** along the dicing path **104**. The laser **206** may further etch a trench into the substrate **100** along the dicing path **104** with the laser **206**.

[0029] The controller **208** is generally designed to facilitate the control and automation of the method described herein. The controller **208** may be coupled to or in communication with the laser source **214**, the optical array **216**, the stage **202**, and the scanner **204**. The stage **202** and the scanner **204** may provide information to the controller **208** regarding the method **300** and alignment of the substrate **100**. The controller **208** may be in communication with or coupled to a CPU (i.e., a computer system). The CPU can be a hardware unit or combination of hardware units capable of executing software applications and processing data. In some configurations, the CPU includes a central processing unit (CPU), a digital signal processor (DSP), an application-specific integrated circuit (ASIC), a graphic processing unit (GPU) and/or a combination of such units. The CPU is generally configured to execute the one or more software applications and process stored media data. The controller **208** may include a non-transitory computer-readable medium for storing instructions of forming a dicing path along a substrate as described herein. The non-transitory computer-readable medium may be a part of the CPU.

[0030] The laser **206** is a pulsed laser. In one embodiment, which can be combined with other embodiments described herein, the laser **206** includes a Gaussian beam profile with a beam quality "M^2-factor" of less than about 1.3. In another embodiment, which can be combined with other embodiments described herein, the laser **206** is a Bessel-type beam profile. In yet other embodiments, the laser **206** is a multi-focus laser and uses a bifocal lens as part of the optical array **216**. Multiple lenses may also be used within the optical array **216** to diffract the laser **206** and form multiple focal points within the substrate **100**. The laser **206** is in communication with the controller **208**. The controller **208** may control other input parameters or output parameters of the laser **206**, as described in the method **300**.

[0031] The stage **202** includes a stage actuator **210**. The stage actuator **210** allows the stage **202** to scan in the X direction, the Y direction, and the Z direction, as indicated by the coordinate system shown in FIG. **2**. The stage **202** is coupled to the controller **208** in order to provide information of the location of the stage **202** to the controller **208**. Additionally, the stage **202** is in communication with the controller **208** such that the stage **202** may move in a direction such that the laser **206** traces the dicing path **104**.

[0032] The scanner **204** includes a scanner actuator **212**. The scanner actuator **212** allows the scanner **204** to scan in the X direction, the Y direction, and the Z direction, as indicated by the coordinate system shown in FIG. **2**. The laser source **214** and the optical array **216** are disposed in the scanner **204**. The scanner **204** is coupled to the controller **208** in order to provide information of the location of the scanner **204** to the controller **208**. Additionally, the scanner **204** is in communication with the controller **208** such that the scanner **204** may move the laser **206** to trace the dicing path **104**. In one embodiment, which can be combined with other embodiments described herein, the scanner **204** is a galvo scanner.

[0033] In one embodiment, which can be combined with other embodiments described herein, the laser machining system **200** performing a method for dicing one or more optical devices **106** from a substrate **100** may utilize both the scanner **204** and the stage **202** to direct the laser **206** along the dicing path **104**. In another embodiment, which can be combined with other embodiments described herein, the laser machining system **200** performing the method for dicing one or more optical devices **106** from a substrate **100** may utilize only the scanner **204** to direct the laser **206** along the dicing path **104**. In yet another embodiment, which can be combined with other embodiments described herein, the laser machining system **200** performing the method for dicing one or more optical devices **106** from a substrate **100** may utilize only the stage **202** to direct the laser **206** along the dicing path **104**.

[0034] In embodiments with a substrate **100** including glass, the scanner **204** and the laser **206** are in a fixed position. The stage **202** is scanned such that the laser **206** moves along the dicing path **104**. The laser **206** includes a Gaussian type beam profile. The laser **206** is an ultra-violet (UV) laser. The wavelength of the laser **206** is less than about 500 nm. The laser **206** has a beam width of less than about 33 μm, such as less than about 25 μm, such as less than about 15 μm at the substrate **100**.

[0035] In embodiments with a substrate **100** including silicon carbide, the scanner **204**, such as a galvo scanner, is utilized to scan the laser **206** along the dicing path **104**. The stage **202** is utilized to scan the substrate **100** between the plurality of sections such that the laser **206** may move along each section along the dicing path **104**. The laser **206** includes a Gaussian type beam profile. The laser **206** is absorptive in the substrate **100** including silicon carbide, and thus is able to dice the one or more optical devices **106** of the substrate **100**. The laser **206** may be an infrared laser with a wavelength of about 1.0 μm to about 5 μm and the photon energy of the laser **206** may be less than about 1.0 eV.

[0036] FIG. **3** is a flow diagram of a method **300** for dicing one or more optical devices **106** from a substrate **100**. The method **300** enables the optical devices **106** to be diced from the substrate **100** with slanted sidewalls, such that the sidewalls are disposed at an angle other than 90 degrees with respect to the top surface **102** and the bottom surface **103** of the substrate **100**. Having angled sidewalls of the optical devices **106** enables improved device performance in some applications. The angle of the sidewalls relative to a vertical plane normal to the top surface **102** and the bottom surface **103** may be referred to as the draft angle. The method **300** has been shown to enable smoother sidewalls and an adjustable draft angle, while the number of chipping defects and the die strength remain the same. The method **300** is further illustrated in FIGS. **4**A-**4**E. FIGS. **4**A-**4**E illustrate schematic cross-sectional views of an optical device **106** and the substrate **100** during different operations of the dicing method **300**.

[0037] The method **300** includes an operation **302** of exposing a substrate, such as the substrate **100**, to one or more first radiation pulses. Exposing the substrate to one or

more first radiation pulses forms a first trench **408** as shown in FIG. **4**A. The first trench **408** is formed along the dicing path **104**. The dicing path **104** is a path surrounding the circumference of one of the optical devices **106**. The dicing path **104** may form a silhouette around one of the optical devices **106**. The dicing path **104** changes as the dicing path **104** extends into the substrate **100** from the top surface **102** to the bottom surface **103**. In embodiments described herein, the dicing path **104** extends at an angle Φ through the substrate **100** along a taper line **406**. The taper line **406** is a reference line indicating an approximation of an expected or chosen edge shape. The taper line **406** may be a linear, curved, or piecewise shape, such that the shape of the edge of each optical device **106** may be varied.

[0038] In the embodiment of FIGS. **4**A-**4**E, the taper line **406** and the subsequent edge shape from the top surface **102** to the bottom surface **103** is linear. The cross-sectional area of the optical device **106** therefore increases as the optical device **106** extends towards the bottom surface **103**. The angle Φ is the angle with respect to a plane normal to the top surface **102** and/or the bottom surface **103**. The angle Φ may be referred to as a taper angle and is about 1 degree to about 45 degrees, such as about 2 degrees to about 30 degrees, such as about 3 degrees to about 15 degrees, such as about 5 degrees to about 10 degrees.

[0039] The first trench **408** has a bottom surface **410**, which intersects the taper line **406**. The bottom surface **410** may intersect the taper line **406** at either an inner extreme, an outer extreme, or a midpoint of the bottom surface **410**. The bottom surface **410** of the first trench **408** is offset from the top surface **102** of the substrate **100** by a first depth D_1. The first depth D_1 of the first trench **408** at least partially defines the angle of the taper line **406**. The first trench **408** as described herein may be either a continuous trench around the entire circumference of the optical device **106** or several trenches around portions of the circumference of the optical device.

[0040] The first trench **408** may be formed during the operation **302** using one or more bursts of first radiation pulses. Each of the one or more bursts includes a plurality of first radiation pulses. The first radiation pulses are delivered from the laser source **214** to the top surface **102** of the substrate **100**. The first radiation pulses are UV radiation pulses. The first radiation pulses have a wavelength of less than about 500 nm, such as less than about 400 nm, such as about 100 nm to about 400 nm, such as about 200 nm to about 400 nm, such as about 250 nm to about 375 nm. The wavelength of the first radiation pulses may be varied depending on the 3rd harmonic generation crystal materials utilized. The frequency of the first radiation pulses is greater than 50 kHz, such as greater than 100 kHz, such as greater than 500 kHz, such as greater than 1 MHz, such as greater than 100 MHz, such as greater than 250 MHz, such as greater than 500 MHz, such as greater than 1 GHz. In some embodiments, the frequency of the first radiation pulses is described as a pulse repetition rate and the first radiation pulses are provided to the substrate **100** at the pulse repetition rate described herein. Using a high pulse frequency, such as 1 GHz or greater, enables the total burst energy applied to the substrate **100** to be maintained, while the individual pulse energy is increased and the pulse width is decreased.

[0041] The pulse width of each of the first radiation pulses is less than about 15 picoseconds, such as less than about 12 picoseconds, such as less than 10 picoseconds, such as less than about 5 picoseconds, such as less than about 2 picoseconds, such as about 500 femtoseconds. The pulse energy of each of the first radiation pulses is greater than about 30 nanojoules, such as greater than about 80 nanojoules, such as greater than about 100 nanojoules, such as greater than about 200 nanojoules. The pulse energy of each of the first radiation pulses is less than about 50 microjoules, such as less than about 40 microjoules, such as less than about 30 microjoules. There are a plurality of first radiation pulses within a first burst of radiation pulses. The first burst of radiation pulses includes 5 to 300 first radiation pulses, such as 10 to 250 first radiation pulses, such as 20 to 150 first radiation pulses. The total burst energy is about 400 nanojoules to about 30 microjoules, such as about 1 microjoule to about 30 microjoules, such as about 1 microjoule to about 20 microjoules.

[0042] After forming the first trench **408**, at operation **304**, the substrate is exposed to one or more second radiation pulses to form a second trench **412** as shown in FIG. **4**B. The one or more second radiation pulses are similar to the one or more first radiation pulses in frequency, wavelength, pulse width, and pulse energy. The total burst energy may be changed, such that the number of pulses or the pulse width may be increased. Increasing the total burst energy enables the second trench **412** to be formed to a second depth D_2. In some embodiments, the depth of focus/focal spot size of the radiation pulses is changed to enable forming the second depth D_2 of the second trench **412**. The second depth D_2 is greater than the first depth D_1. The second depth D_2 is defined between the top surface **102** of the substrate **100** and the bottom surface **414** of the second trench **412**. The difference between the first depth D_1 and the second depth D_2 may be varied depending on the slope of the taper line **406** and the width of each of the first trench **408** and the second trench **412**. In one embodiment, the difference between the first depth D_1 and the second depth D_2 is about 1 micrometer (μm) to about 10 μm, such as about 1 μm to about 5 μm, such as about 2 μm to about 4 μm, such as about 2 μm to about 3 μm, such as about 2 μm or about 2.5 μm. When the difference between the first depth D_1 and the second depth D2 is reduced, the roughness of the sidewall of the optical device **106** is reduced.

[0043] The bottom surface **414** of the second trench **412** intersects the taper line **406**. The bottom surface **414** intersects the taper line **406** at either an inner extreme, an outer extreme, or a midpoint of the bottom surface **414**. In embodiments where the bottom surface **414** intersects the taper line **406** at an inner extreme, the bottom surface **410** also intersects the taper line **406** at the inner extreme. When the bottom surface **414** of the second trench **412** intersects the taper line **406** at an outer extreme, the bottom surface **410** of the first trench **408** also intersects the taper line **406** at the outer extreme. When the bottom surface **414** of the second trench **412** intersects the taper line **406** at a midpoint, the bottom surface **410** of the first trench **408** also intersects the taper line **406** at the midpoint.

[0044] After forming the second trench **412**, the substrate is exposed to one or more additional radiation pulses to form additional trenches having different depths during an operation **306**. Exemplary additional trenches at different depths are illustrates in FIGS. **4**C-**4**E. The one or more additional radiation pulses include at least one or more third radiation pulses to form a third trench **416** as shown in FIG. **4**C, one

or more fourth radiation pulses to form a fourth trench **420** as shown in FIG. **4**D, and one or more fifth radiation pulses to form a fifth trench **424** as shown in FIG. **4**E. The one or more additional trenches are therefore formed by exposing the substrate to one or more additional radiation pulses around the circumference of the optical device. Each additional trench of the one or more additional trenches has a depth greater than a previous depth of a previously formed trench. Each subsequently formed additional trench is concentric about the previously formed additional trench. In some embodiments, each additional trench of the one or more additional trenches is greater in depth than the trench immediately preceding the additional trench.

[0045] A plurality of additional trenches may be formed depending on the desired sidewall roughness, the desired slope, and the total thickness of the substrate **100**. In some embodiments, there are about 100 trenches to about 750 trenches formed, such as about 100 trenches to about 500 trenches formed, such as about 150 trenches to about 300 trenches formed. The one or more additional radiation pulses are similar to the one or more first radiation pulses or the one or more second radiation pulses in frequency, wavelength, pulse width, and pulse energy. The total burst energy may be changed, such that the number of pulses or the pulse width may be increased. Increasing the total burst energy enables the additional trenches to be formed at varying depths.

[0046] The third trench **416** is formed to a third depth D_3, the fourth trench **420** is formed to a fourth depth D_4, and the fifth trench **424** is formed to a fifth depth D_5. The third depth D_3 is greater than the second depth D_2. The fourth depth D_4 is greater than the third depth D_3. The fifth depth D_5 is greater than the fourth depth D_4. The third depth D_3 is defined between the top surface **102** of the substrate **100** and a bottom surface **418** of the third trench **416**. The fourth depth D_4 is defined between the top surface **102** of the substrate **100** and a bottom surface **422** of the fourth trench **420**. The fifth depth D_5 is defined between the top surface **102** of the substrate **100** and a bottom surface **426** of the fifth trench **424**. Each of the bottom surfaces **410**, **414**, **418**, **422**, **426** intersect the taper line **406**. The bottom surfaces **410**, **414**, **418**, **422**, **426** intersect the taper line **406** at a similar inner extreme, outer extreme, or midpoint of the bottom surface of each bottom surface **410**, **414**, **418**, **422**, **426**. The bottom surface **426** of the fifth trench **424** is illustrated as being formed through the bottom surface **103** of the substrate **100**. In this embodiment, the fifth depth D_5 is the same as the total thickness of the substrate **100**. In alternative embodiments, the fifth depth D_5 is only a fraction of the total thickness of the substrate **100** and additional trenches are formed. In some embodiments, none of the trenches pass completely through the substrate and instead are only formed through a fraction of the substrate thickness. The optical devices **106** are then subsequently removed using other methods.

[0047] The difference between the depths of each of the trenches **416**, **420**, **424** may be varied depending on the slope of the taper line **406** and the width of each of the trenches **416**, **420**, **424**. In one embodiment, the difference in depth between each adjacent trench is about 1 micrometer (μm) to about 7.5 μm, such as about 1 μm to about 5 μm, such as about 2 μm to about 4 μm, such as about 2 μm to about 3 μm, such as about 2 μm or about 2.5 μm.

[0048] Each of the trenches are formed radially outward of the previously formed optical trenches and form a slanted sidewall. Each trench alternatively is formed radially inward of the previously formed optical trenches to form the slanted sidewall. Each of the trenches are formed concentrically about the previously formed trenches and the optical device **106**.

[0049] The plurality of trenches may subsequently be formed around each of the optical devices **106** within the substrate **100**. In some embodiments, the trenches are formed around each of the optical devices **106** simultaneously using a plurality of lasers.

[0050] After forming the plurality of trenches, the optical device **106** is removed from the substrate **100** during an operation **308**. The optical device **106** may be removed from the substrate **100** using thermal treatment, chemical treatment, or mechanical separation techniques. The optical device **106** may be removed from the substrate **100** in a process chamber or stage different from the laser machining system **200**.

[0051] FIG. **5** is a schematic plan view of an optical device **106** from a substrate **100**. The dicing path **104** of the laser machining system **200** is provided around the circumference of the optical device **106**. The dicing path **104** includes multiple silhouettes **504**, **506**, **508** of the optical device **106**. Each of the silhouettes **504**, **506**, **508** is disposed around the circumference of the optical device **106**. Each of the silhouettes **504**, **506**, **508** are concentric with one another and the one or more trenches are formed along the silhouettes **504**, **506**, **508**. In one embodiment, the first trench **408** is formed along a first silhouette **504**. The second trench **412** is formed along the second silhouette **506**. The third trench **416** is formed along a third silhouette **508**. Additional trenches may also be formed along additional silhouettes, such as the fourth trench **420** and the fifth trench **424** of FIGS. **4**D and **4**E being formed along a fourth silhouette or a fifth silhouette (not shown).

[0052] Each of the trenches **408**, **412**, **416**, **420**, **424** and the corresponding silhouettes **504**, **506**, **508** are formed using a plurality of radiation pulses. Each of the radiation pulses are applied to the substrate at one or more pulse positions **502***a*, **502***b*, **502***c*, **502***n*. As shown herein, one or more first radiation pulses is applied to the first pulse position **502***a* before one of the substrate **100** or the scanner **204** are moved to apply one or more second radiation pulses to the second pulse position **502***b*. The substrate **100** and/or the scanner **204** may subsequently be moved to apply one or more third radiation pulses to the third pulse position **502***c*. Additional radiation pulses are applied around the circumference of the first silhouette **504** to form the first trench **408**. A last pulse position **502***n* is disposed adjacent to the first pulse position **502***a*. Each of the adjacent pulse positions **502***a*, **502***b*, **502***c*, **502***n* overlap in some embodiments to form a continuous trench. In some embodiments, the silhouette **504** may be formed using a single burst of radiation pulses or a plurality of bursts of radiation pulses. Each of the voids at each of the first pulse position **502***a*, the second pulse position **502***b*, the third pulse position **502***c*, and the last pulse position **502***n* are formed using a burst of radiation pulses.

[0053] The silhouettes as described herein, may be the path around which the radiation pulses are applied, such that the center of each of the pulse positions **502***a*, **502***b*, **502***c*, **502***n* are disposed on the first silhouette **504**. Although not shown for clarity, similar pulse positions are disposed on each of the second silhouette **506** and the third silhouette

508. Each of the silhouettes **504**, **506**, **508** are disposed at different radial positions relative to the exterior edge of the optical device **106**. The exterior edge of the optical device **106** as described herein is the inner edge of the dicing path **104**. The first silhouette **504** is disposed a first radial distance R_1 from the exterior edge of the optical device **106**. The second silhouette **506** is disposed a second radial distance R_2 from the exterior edge of the optical device **106**. The third silhouette **508** is disposed a third radial distance R_3 from the exterior edge of the optical device **106**. The second radial distance R_2 is greater than the first radial distance R_1. The third radial distance R_3 is greater than the second radial distance R_2. The first radial distance R_1 and the second radial distance R_2 are separated by a radial difference. The second radial distance R_2 and the third radial distance R_3 are separated by a similar radial difference to the radial difference between the first radial distance R_1 and the second radial distance R_2. The radial difference between each of the silhouettes is less than about 10 μm, such as less than about 5 μm, such as less than about 3 μm.

[0054] FIGS. **6**A-**6**B are schematic cross-sectional views of an optical device **106** after dicing. The optical device **106** is diced using the method **300** of FIG. **3**. Each of the trenches **408**, **412**, **416**, **420**, **424** form a portion of the device edge **602**. In FIG. **6**A, two adjacent optical devices **106**, **106'** are shown at a first dicing position. The first dicing position is the position between two adjacent optical devices **106**, **106'** where the diced trenches of both of a first optical device **106** and a second optical device **106'** are close enough to form a single perforation **604** between the first optical device **106** and the second optical device **106'**. Using a single perforation **604** reduces the amount of wasted material and the likelihood of cracking or chipping along the edge of each of the optical devices **106**, **106'**. The second optical device **106'** is diced using a similar method to the first optical device **106** and includes a top surface **102'**, a bottom surface **103'** and a device edge **602'** formed along a dicing path **104'**.

[0055] The device edges **602**, **602'** are shown as linear surfaces, but may be curved or stepped surfaces. The number of trenches formed to dice each of the optical devices **106**, **106'** are increased to reduce the roughness of the device edges **602**, **602'**. When a large enough number of trenches are utilized, such as greater than 50 trenches or greater than 100 trenches, the device edges **602**, **602'** may approximate a smooth surface.

[0056] The device edges **602**, **602'** are disposed at the angle ϕ. The angle ϕ is an angle from a plane disposed between a reference plane and the device edge **602**, **602'**. The reference plane is normal to both the top surfaces **102**, **102'** and the bottom surfaces **103**, **103'** of the substrate **100**.

[0057] When a larger distance separates the first optical device **106** and the second optical device **106'**, the outer portion **124** is disposed between each of the device edges **602**, **602'**. In this embodiment, there are multiple perforations. A first perforation **606** separates the first optical device **106** and the outer portion **124**. A second perforation **606'** separates the second optical device **106'** and the outer portion **124**. The trenches formed to dice each of the optical devices **106**, **106'** have an outer surface **608**, **608'**. The outer surfaces **608**, **608'** are vertical surfaces and opposite the device edges **602**, **602'**.

[0058] FIG. **7** is a schematic side view of an optical device **106** after dicing. The optical device **106** includes the slanted device edge **602** between the top surface **102** and the bottom surface **103**. The slanted device edge **602** is disposed at the angle ϕ. The angle ϕ may be constant around the device edge **602** or may change at different points around the circumference of the optical device **106**.

[0059] FIGS. **8**A-**8**B are schematic plan views of optical device **800**, **850** after dicing. The optical devices **800**, **850** illustrate how the shape of each device edge **804** may be changed using the method described herein. Both of the optical devices **800**, **850** include an upper surface **802**, a lower surface **806**, and a slanted device edge **804**. The shapes of the outer edges of each of the upper surface **802** and the lower surface **806** are changed between the first optical device **800** and the second optical device **850**.

[0060] In the first optical device **800**, the upper surface **802** has a rectangular outer circumference **808**, such that the outer circumference **808** has a shape with corners **814** disposed at 90 degree angles. The lower surface **806** has a rectangular outer circumference **810**, but the corners **812** are curved, such that each of the corners **812** have a fillet.

[0061] In the second optical device **850**, the upper surface **802** again has a rectangular outer circumference **808** with sharp corners **814**. Unlike the first optical device **800**, the lower surface **806** of the second optical device **850** also has a rectangular outer circumference **810** with corners **816** disposed at 90 degree angles. The different shapes of the upper surface **802** and the lower surface **806** are enabled by using different combinations of trench spacing and trench depth. The trenches may similarly follow different silhouettes as the trenches progress radially outward or inward from the edge of the upper surface **802** of the optical devices **800**, **850**.

[0062] The apparatus and method described herein enable the dicing of optical devices from a substrate in a manner which produces slanted edges of each optical device. The angle/shape of the slanted edges may be varied by forming concentric trenches with varying depths. The trenches are formed using laser ablation. During laser ablation, a plurality of radiation pulses are applied to the substrate around the dicing path of one or more optical devices. The method described herein further enables the shape of the optical device edges to change at different portions of the circumference of the optical device. Enabling various edge shapes/angles assists in obtaining improved optical performance of the optical devices during some applications.

[0063] While the foregoing is directed to embodiments of the present disclosure, other and further embodiments of the disclosure may be devised without departing from the basic scope thereof, and the scope thereof is determined by the claims that follow.

1. A method of dicing an optical device from a substrate comprising:

forming a first trench by exposing the substrate to one or more first radiation pulses around a circumference of the optical device, the first trench having a first depth;

forming a second trench by exposing the substrate to one or more second radiation pulses around the circumference of the optical device, the second trench having a second depth greater than the first depth and the second trench being concentric about the first trench; and

forming one or more additional trenches by exposing the substrate to one or more additional radiation pulses around the circumference of the optical device, each additional trench of the one or more additional trenches having a depth greater than a previous depth of a

previously formed trench, each subsequently formed additional trench concentric about a previously formed additional trench.

2. The method of claim **1**, wherein each of the one or more first radiation pulses has a pulse width of less than about 30 picoseconds.

3. The method of claim **1**, wherein the one or more second radiation pulses are delivered outward of the one or more first radiation pulses by a radial distance of about 0.01 mm to about 0.05 mm.

4. The method of claim **1**, wherein the first trench and the second trench a tapered edge of the optical device, the tapered edge having a taper angle of about 1 degree to about 45 degrees with respect to a plane normal to a top substrate surface.

5. The method of claim **1**, wherein the substrate comprises one or a combination of silicon, silicon carbide, silicon oxide, or aluminum nitride.

6. The method of claim **1**, wherein the one or more first radiation pulses and the one or more second radiation pulses have a wavelength of less than about 500 nm.

7. The method of claim **1**, wherein each of the one or more first radiation pulses and the one or more second radiation pulses are delivered to one or more concentric silhouettes around the optical device.

8. The method of claim **1**, wherein each of the first radiation pulses and each of the second radiation pulses have a pulse energy of less than about 50 μJ.

9. A method of dicing one or more optical devices within a substrate comprising:

forming a first tapered edge around a first optical device by forming a plurality of trenches around the first optical device using one or more bursts of radiation pulses, the plurality of trenches varying in depth from a top surface of the substrate;

forming a second tapered edge around a second optical device by forming a plurality of trenches around the second optical device using one or more bursts of radiation pulses, the plurality of trenches varying in depth from the top surface of the substrate; and

removing the first optical device and the second optical device from the substrate after forming the first tapered edge and the second tapered edge.

10. The method of claim **9**, wherein the first tapered edge and the second tapered edge are disposed at an angle of about 1 degree and about 45 degrees, the angle defined between a plane normal to the top surface of the substrate and a taper line of each of the first optical device and the second optical device, wherein the taper line of each of the first optical device and the second optical device intersects a discreet point on each of the plurality of trenches.

11. The method of claim **10**, wherein the one or more bursts of radiation pulses comprise:

a pulse width of less than about 15 picoseconds;

a pulse frequency of greater than 50 kHz; and

a pulse energy of less than 200 nJ.

12. A non-transitory computer-readable medium storing instructions that, when executed by a processor, cause a computer system to perform the steps of:

forming a tapered edge around a first optical device by:

instructing a laser source to deliver one or more first radiation pulses to a substrate around a circumference of the first optical device to form a first trench, the first trench having a first depth and the substrate disposed on a stage, one or both of the stage and the laser source being instructed to move during delivery of the first radiation pulses;

instructing the laser source to deliver one or more second radiation pulses to the substrate around the circumference of the first optical device to form a second trench, the second trench having a second depth greater than the first depth and the second trench radially outward of the first trench, and one or both of the stage and the laser source being instructed to move during delivery of the first radiation pulses; and

instructing the laser source to deliver one or more additional radiation pulses to the substrate around the circumference of the first optical device to form one or more additional trenches, each additional trench of the one or more additional trenches having a depth greater than a previous depth of a previously formed trench, each subsequently formed additional trench concentric about a previously formed additional trench, and one or both of the stage and the laser source being instructed to move during delivery of the one or more additional radiation pulses.

13. The non-transitory computer-readable medium of claim **12**, wherein the tapered edge is disposed at an angle other than 0 degrees with respect to a vertical plane normal to a top substrate surface.

14. The non-transitory computer-readable medium of claim **13**, wherein the angle of the tapered edge is about 1 degree to about 45 degrees.

15. The non-transitory computer-readable medium of claim **12**, wherein each of the first radiation pulses and each of the second radiation pulses have a pulse width of less than about 15 picoseconds.

16. The non-transitory computer-readable medium of claim **15**, wherein each of the first radiation pulses and each of the second radiation pulses have a pulse frequency of greater than 50 kHz.

17. The non-transitory computer-readable medium of claim **16**, wherein each of the first radiation pulses and each of the second radiation pulses have a pulse energy of less than 200 nJ.

18. The non-transitory computer-readable medium of claim **17**, wherein each the first radiation pulses are delivered in a first burst and the second radiation pulses are delivered in a second burst, each of the first burst and the second burst having a burst energy of less than about 40 μJ.

19. The non-transitory computer-readable medium of claim **12**, wherein the first trench is formed along a first silhouette and the second trench is formed along a second silhouette, the first silhouette separated from the second silhouette by a radial distance of about 0.01 mm to about 0.05 mm.

20. The non-transitory computer-readable medium of claim **12**, wherein a change in depth between the first trench and the second trench is about 1 μm to about 7.5 μm.

* * * * *