US 20230221484A1

(19) **United States**

(12) **Patent Application Publication**

(10) **Pub. No.: US 2023/0221484 A1**

(43) **Pub. Date: Jul. 13, 2023**

MEYER TIMMERMAN THIJSSEN et al.

(54) **SELF-ALIGNED FORMATION OF ANGLED OPTICAL DEVICE STRUCTURES**

(71) Applicant: **Applied Materials, Inc.**, Santa Clara, CA (US)

(72) Inventors: **Rutger MEYER TIMMERMAN THIJSSEN**, Sunnyvale, CA (US); **Ludovic GODET**, Sunnyvale, CA (US)

(21) Appl. No.: **17/647,535**

(22) Filed: **Jan. 10, 2022**

Publication Classification

(51) **Int. Cl.**
F21V 8/00 (2006.01)

(52) **U.S. Cl.**
CPC ***G02B 6/0065*** (2013.01); ***G02B 6/0016*** (2013.01); ***G02B 6/0036*** (2013.01)

(57) **ABSTRACT**

Embodiments described herein provide for methods of forming angled optical device structures. The methods described herein utilize etching a mandrel material with an etch chemistry that is selective to the hardmask, i.e., the mandrel material is etched at a higher rate than the hardmask. Therefore, mandrel trenches are formed in the mandrel material. Device material of the angled optical device structures to be formed is deposited on the plurality of angled mandrels. An angled etch process is performed on portions of the device material such that the angled optical device structures are formed.

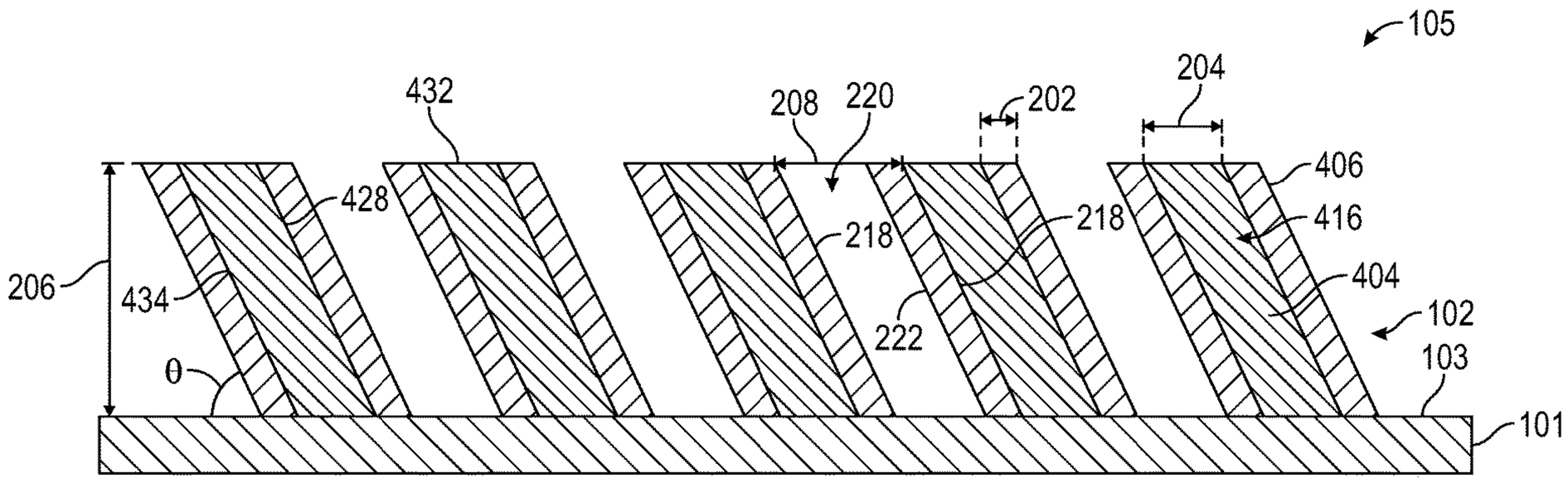

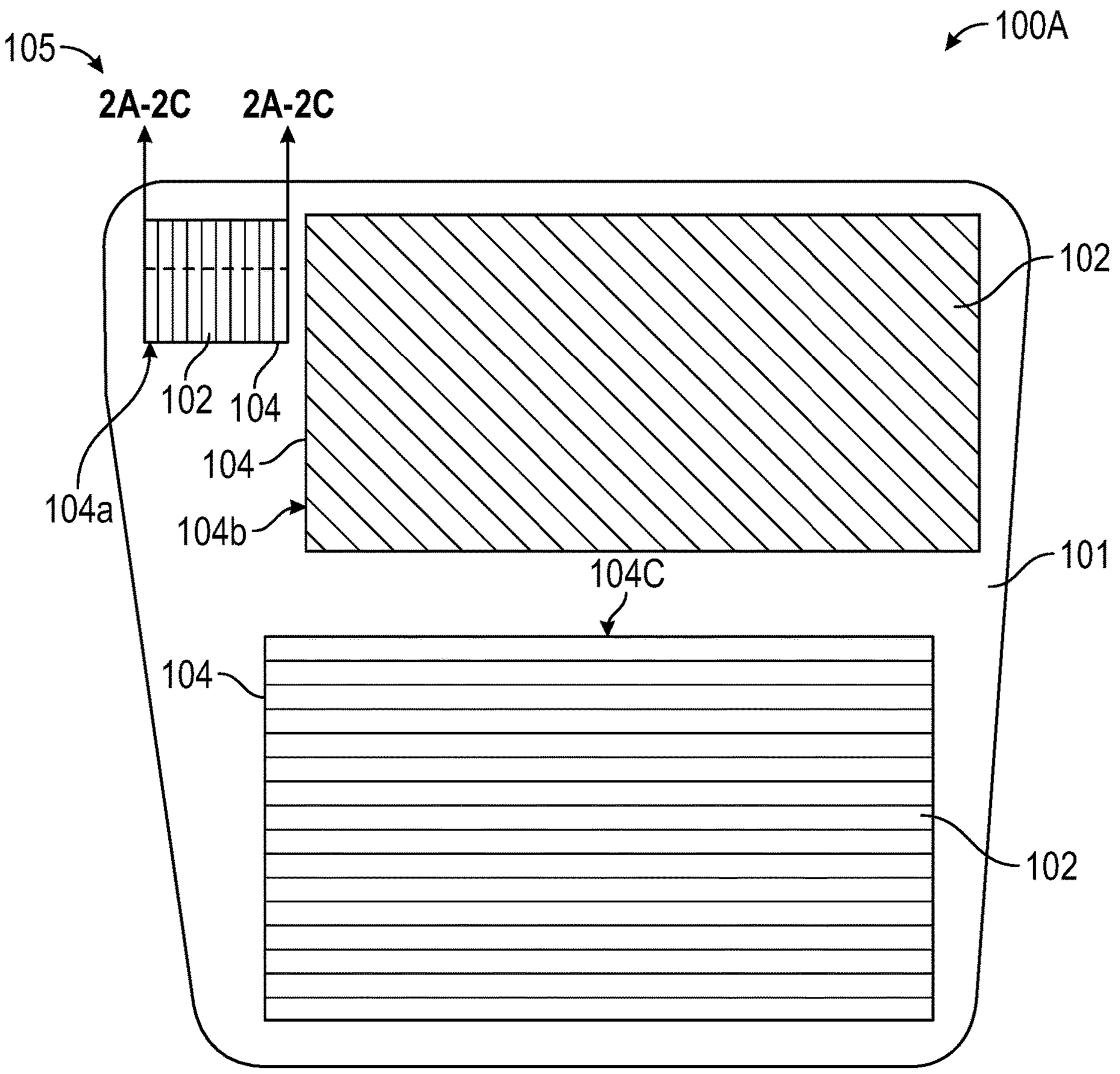

FIG. 1A

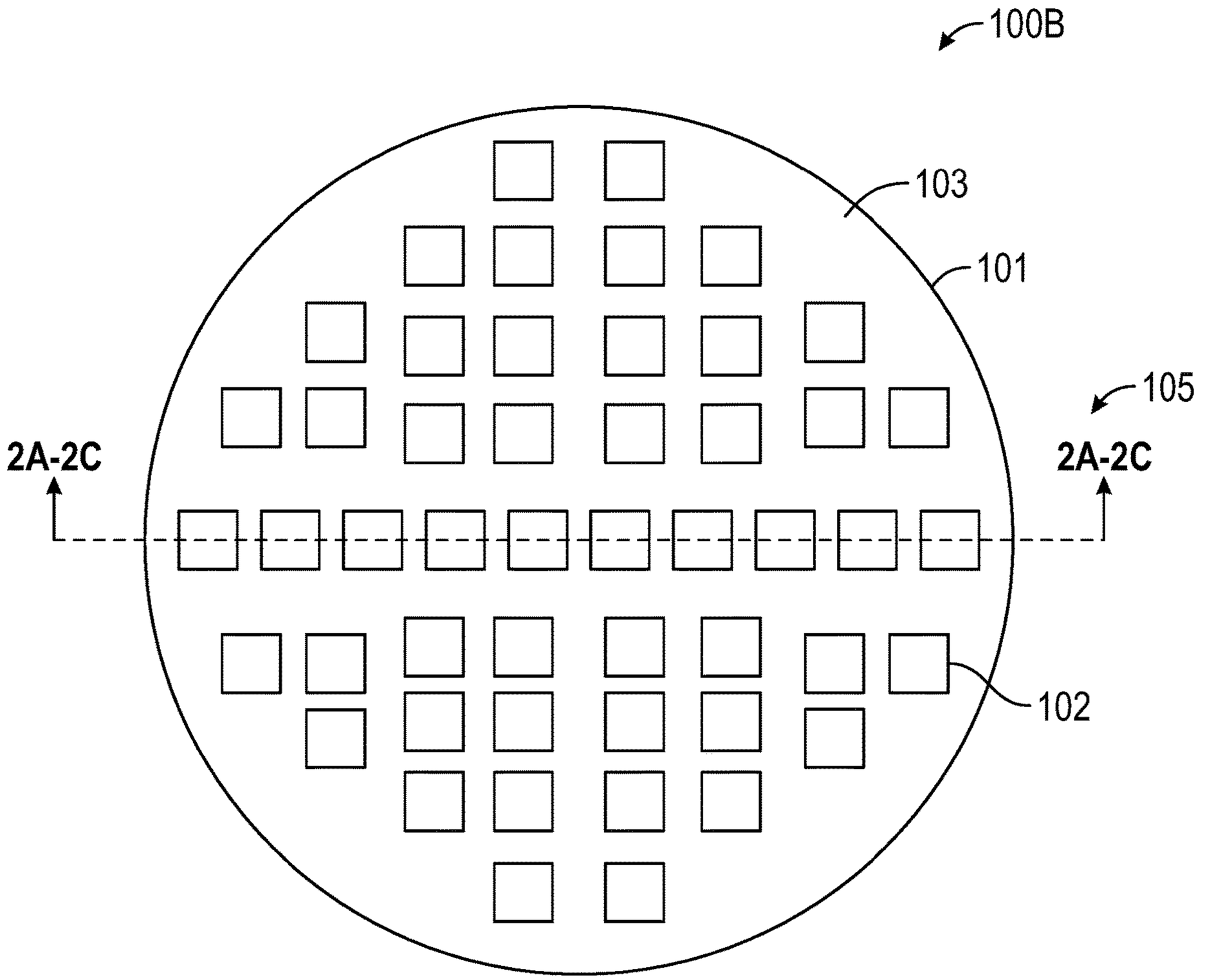

FIG. 1B

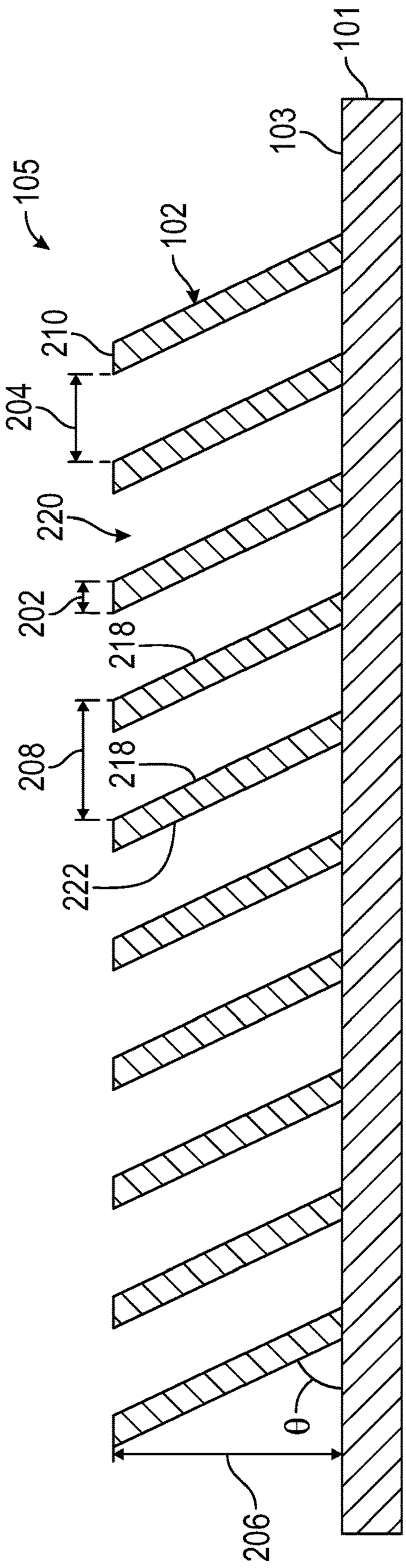
101
103
105
102
210
204
220
202
218
208
218
222
θ
206

FIG. 2A

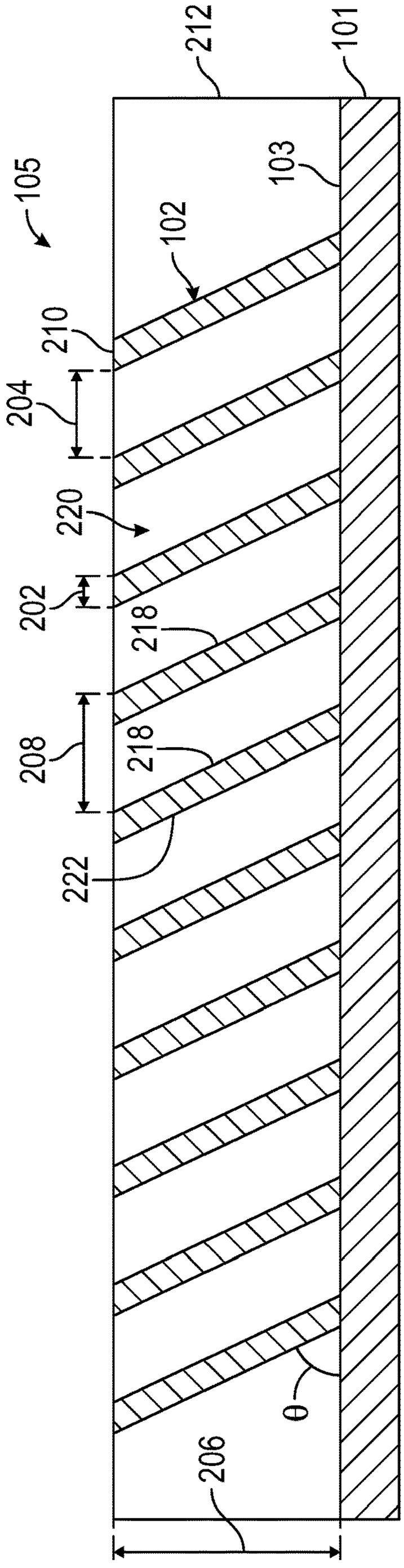
212
101
103
105
102
210
204
220
202
218
208
218
222
θ
206

FIG. 2B

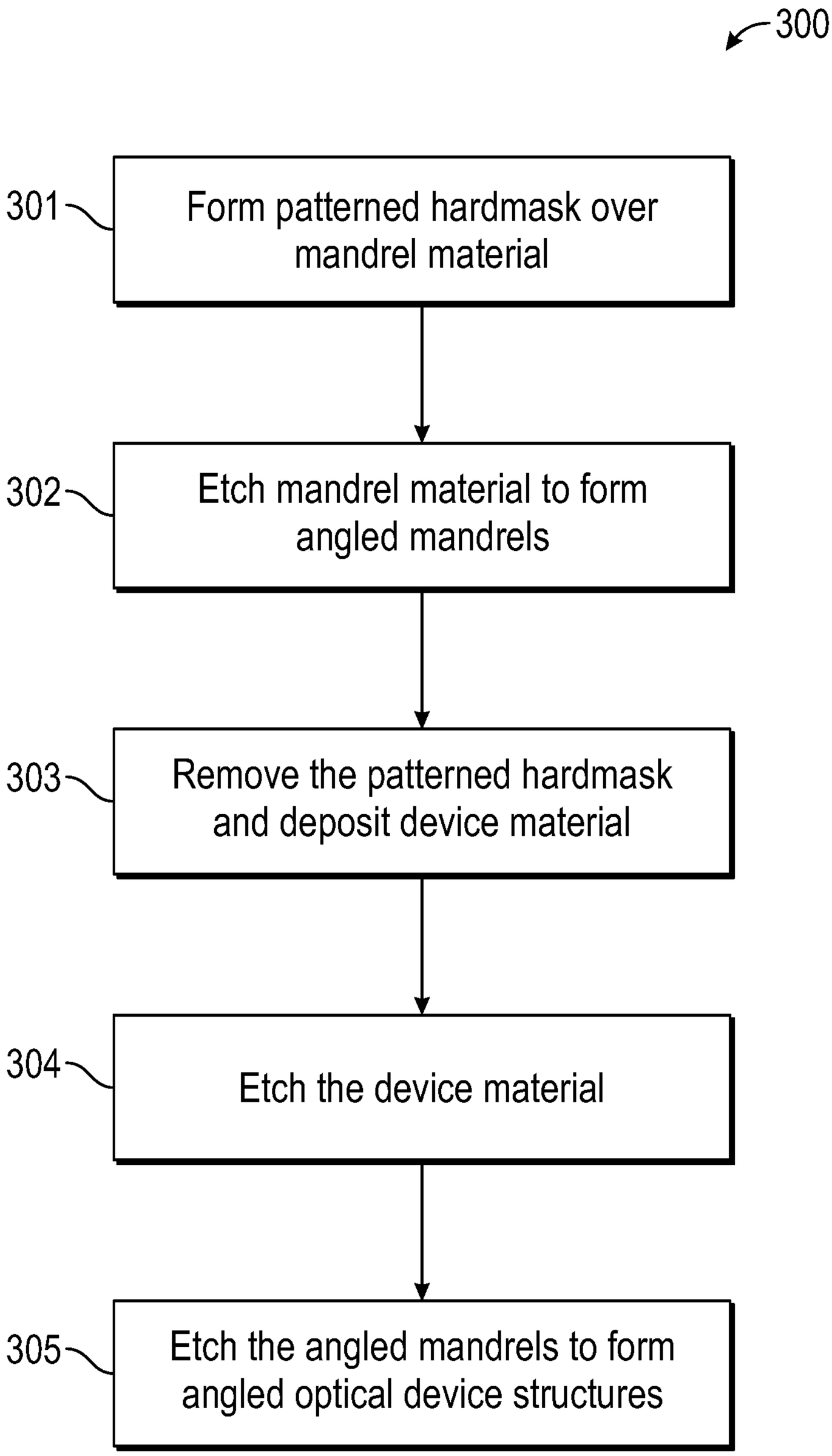
300
301
Form patterned hardmask over mandrel material
302
Etch mandrel material to form angled mandrels
303
Remove the patterned hardmask and deposit device material
304
Etch the device material
305
Etch the angled mandrels to form angled optical device structures

FIG. 3

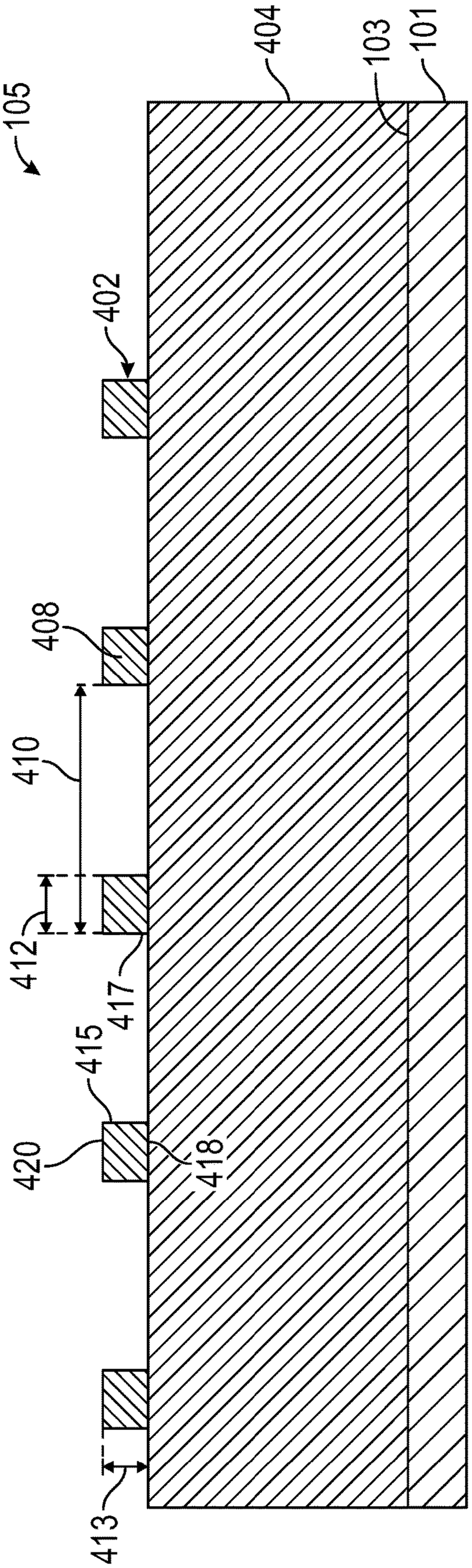
105
404
103
101
402
408
410
412
417
415
420
418
413

FIG. 4A

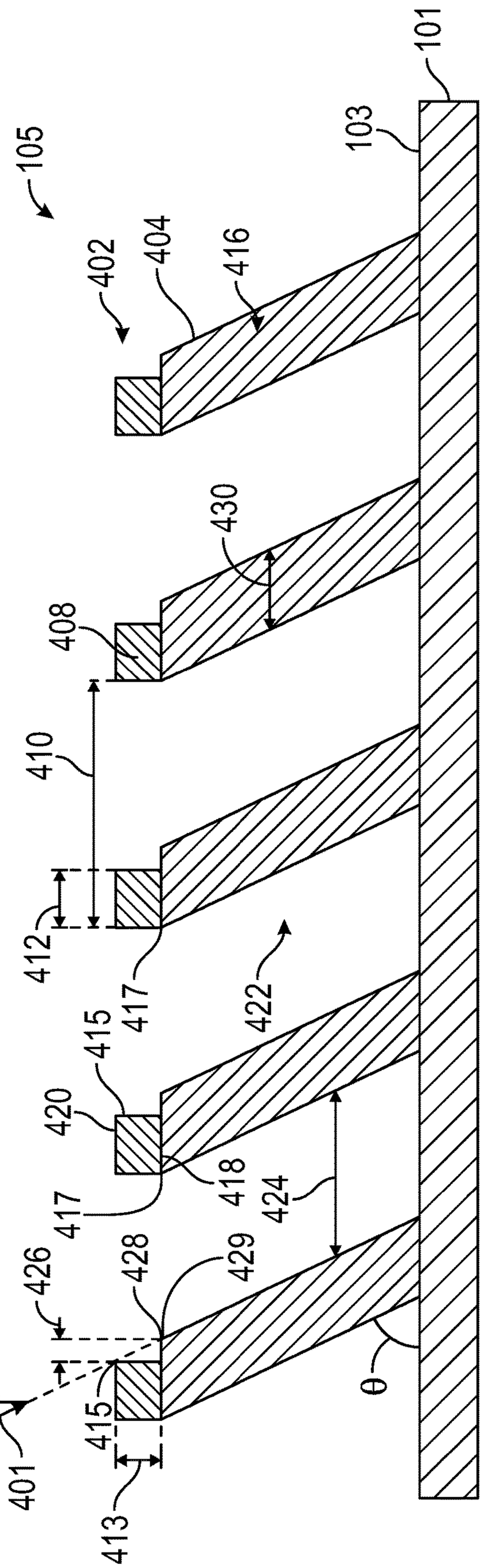
105
101
103
402
404
416
430
408
410
412
417
422
415
420
418
424
426
428
429
403
Ø
401
θ
413

FIG. 4B

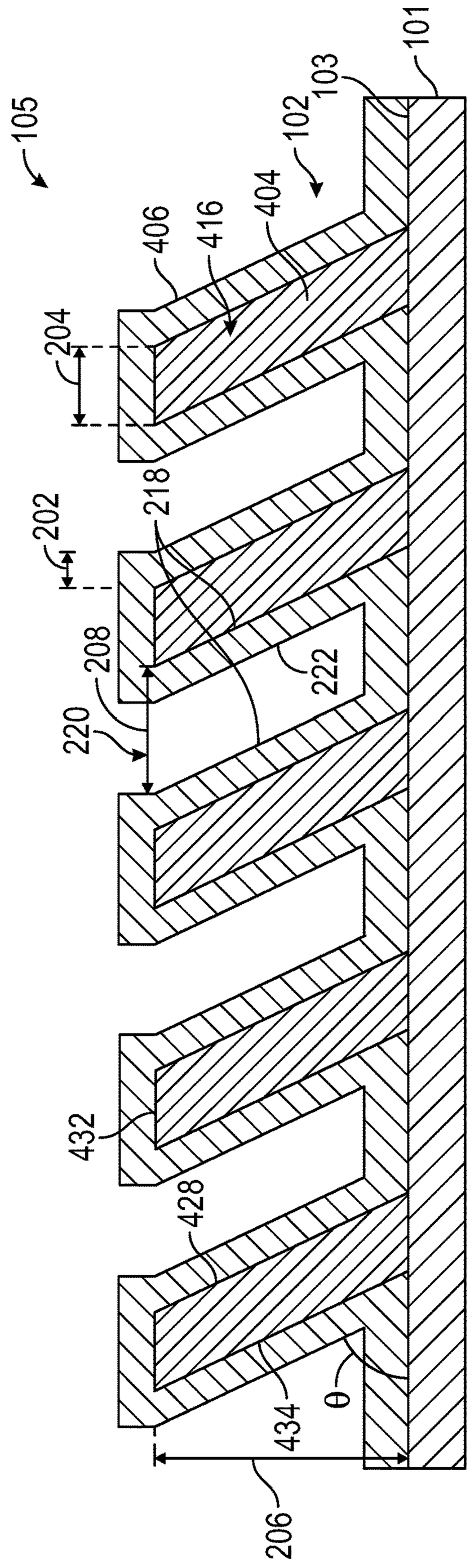
105
101
103
102
404
406
416
204
218
202
208
222
220
432
428
434
θ
206

FIG. 4C

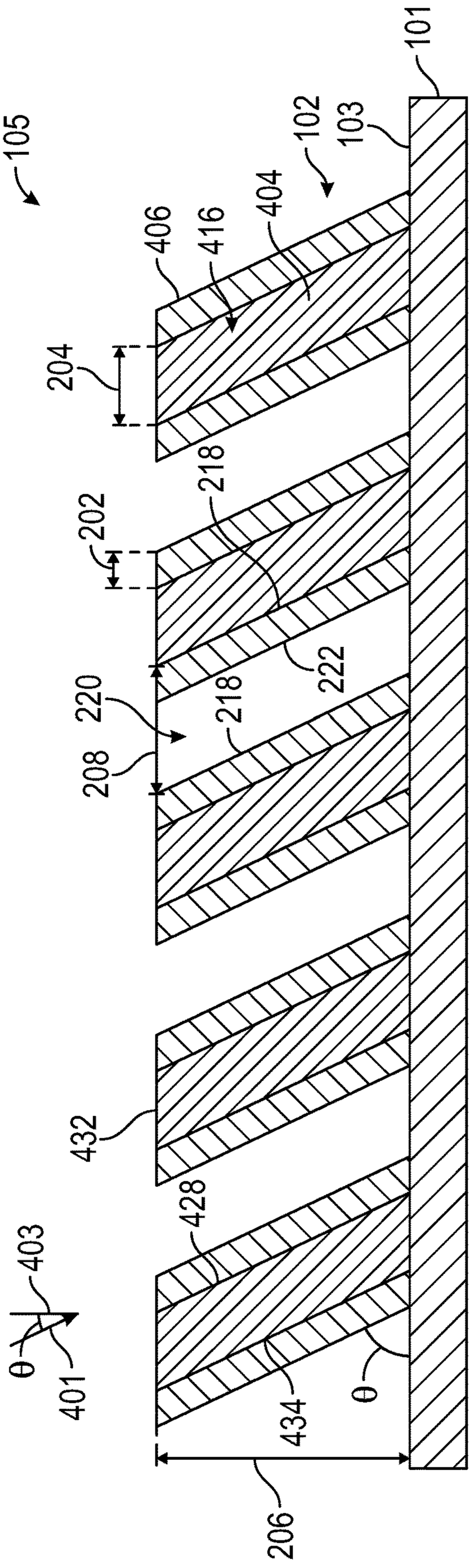
105
101
103
102
404
406
416
204
218
202
208
222
220
432
428
434
θ
403
401
206

FIG. 4D

SELF-ALIGNED FORMATION OF ANGLED OPTICAL DEVICE STRUCTURES

BACKGROUND

Field

[0001] Embodiments of the present disclosure generally relate to optical devices for augmented, virtual, and mixed reality. More specifically, embodiments described herein provide for angled optical device structures and a method of forming angled optical device structures.

Description of the Related Art

[0002] Virtual reality is generally considered to be a computer generated simulated environment in which a user has an apparent physical presence. A virtual reality experience can be generated in 3D and viewed with a head-mounted display (HMD), such as glasses or other wearable display devices that have near-eye display panels as lenses to display a virtual reality environment that replaces an actual environment. Augmented reality, however, enables an experience in which a user can still see through the display lenses of the glasses or other HMD device to view the surrounding environment, yet also see images of virtual objects that are generated for display and appear as part of the environment. Augmented reality can include any type of input, such as audio and haptic inputs, as well as virtual images, graphics, and video that enhances or augments the environment that the user experiences. As an emerging technology, there are challenges and design constraints with augmented reality.

[0003] One such challenge is displaying a virtual image overlaid on an ambient environment. Optical devices including waveguide combiners, such as augmented reality waveguide combiners, and flat optical devices, such as metasurfaces, are used to assist in overlaying images. Generated light is propagated through optical device structures of the optical device until the light exits the optical device and is overlaid on the ambient environment. However, forming the optical device structures can be time consuming and include costly patterning processes. Accordingly, what is needed in the art are improved methods of forming optical device structures.

SUMMARY

[0004] In one embodiment, a method is provided. The method includes disposing a hardmask layer on a mandrel material and the mandrel material is disposed on a substrate. The method further includes patterning the hardmask layer into a plurality of hardmask structures. The hardmask structures define exposed portions of the mandrel material. The method further includes etching the exposed portions of the mandrel material at a first etch angle to form a plurality of angled mandrels having a device angle and removing the hardmask structures. The method further includes depositing a device material on the substrate and on a mandrel upper surface, a leading sidewall, and a trailing sidewall of each of the plurality of angled mandrels and removing the device material disposed on the substrate and the mandrel upper surface of the plurality of angled mandrels with an angled etch process at a second etch angle to form a plurality of angled optical device structures having the device angle.

[0005] In another embodiment, a method is provided. The method includes disposing a hardmask layer on a mandrel material and the mandrel material is disposed on a substrate. The method further includes patterning the hardmask layer into a plurality of hardmask structures. The hardmask structures define exposed portions of the mandrel material. The method further includes etching the exposed portions of the mandrel material at a first etch angle to form a plurality of angled mandrels having a device angle and removing the hardmask structures. The method further includes depositing a device material on the substrate and on a mandrel upper surface, a leading sidewall, and a trailing sidewall of each of the plurality of angled mandrels. The method further includes removing the device material disposed on the substrate and the upper surface of the plurality of angled mandrels with an angled etch process at a second etch angle to form a plurality of angled optical device structures having the device angle and removing the plurality of angled mandrels between the plurality of angled optical device structures.

[0006] In yet another embodiment, a method is provided. The method includes disposing a hardmask layer on a mandrel material and the mandrel material is disposed on a substrate. The method further includes patterning the hardmask layer into a plurality of hardmask structures. The hardmask structures define exposed portions of the mandrel material. The plurality of hardmask structures include a patterned pitch between adjacent hardmask structures. The patterned pitch is from about 200 nm to about 2000 nm. The plurality of hardmask structures further include a hardmask structure critical dimension from about 50 nm to about 500 nm. The method further includes etching the exposed portions of the mandrel material to form a plurality of angled mandrels at a device angle and removing the hardmask structures. The method further includes depositing a device material on the substrate and on a mandrel upper surface, a leading sidewall, and a trailing sidewall of each of the plurality of angled mandrels. The method further includes removing the device material disposed on the substrate and the upper surface of the plurality of angled mandrels with an angled etch process at an etch angle to form a plurality of angled optical device structures at the device angle and removing the plurality of angled mandrels between the plurality of angled optical device structures.

BRIEF DESCRIPTION OF THE DRAWINGS

[0007] So that the manner in which the above recited features of the present disclosure can be understood in detail, a more particular description of the disclosure, briefly summarized above, may be had by reference to embodiments, some of which are illustrated in the appended drawings. It is to be noted, however, that the appended drawings illustrate only exemplary embodiments and are therefore not to be considered limiting of scope, as the disclosure may admit to other equally effective embodiments.

[0008] FIG. **1**A is a perspective, frontal view of an optical device according to embodiments described herein.

[0009] FIG. **1**B is schematic, top view of an optical device according to embodiments described herein.

[0010] FIGS. **2**A and **2**B are schematic, cross-sectional views of a portion of an optical device with a plurality of angled optical device structures according to embodiments described herein.

[0011] FIG. **3** is a flow diagram of a method for forming a plurality of angled optical device structures of an optical device according to embodiments described herein.

[0012] FIGS. **4**A-**4**D are schematic, cross-sectional views of a portion of an optical device during a method for forming a plurality of angled optical device structures according to embodiments described herein.

[0013] To facilitate understanding, identical reference numerals have been used, where possible, to designate identical elements that are common to the figures. It is contemplated that elements and features of one embodiment may be beneficially incorporated in other embodiments without further recitation.

DETAILED DESCRIPTION

[0014] Embodiments of the present disclosure generally relate to optical devices for augmented, virtual, and mixed reality. More specifically, embodiments described herein provide for methods of forming angled optical device structures. The methods described herein utilize etching a mandrel material with an etch chemistry that is selective to a patterned hardmask, e.g., the mandrel material is etched at a higher rate than the patterned hardmask. Therefore, angled mandrels are formed in the mandrel material such that device material of the angled optical device structures to be formed is deposited on the plurality of angled mandrels. The device material is etched at an etch angle such that a plurality of angled optical device structures remain.

[0015] FIG. **1**A is a perspective, frontal view of an optical device **100**A. FIG. **1**B is a schematic, top view of an optical device **100**B. It is to be understood that the optical devices **100**A and **100**B described below are exemplary optical devices. In one embodiment, which can be combined with other embodiments described herein, the optical device **100**A is a waveguide combiner, such as an augmented reality waveguide combiner. In another embodiment, which can be combined with other embodiments described herein, the optical device **100**B is a flat optical device, such as a metasurface. The optical devices **100**A and **100**B include a plurality of angled optical device structures **102** disposed on a surface **103** of a substrate **101**. The angled optical device structures **102** may be nanostructures having sub-micron dimensions, e.g., nano-sized dimensions. A portion **105** of the plurality of angled optical device structures **102** are shown in FIGS. **1**A and **1**B.

[0016] In one embodiment, which can be combined with other embodiments described herein, regions of the angled optical device structures **102** correspond to one or more gratings **104**, such as a first grating **104***a*, a second grating **104***b*, and a third grating **104***c*. In one embodiment, which can combined with other embodiments described herein, the optical devices **100**A is a waveguide combiner that includes at least the first grating **104***a* corresponding to an input coupling grating and the third grating **104***c* corresponding to an output coupling grating. The waveguide combiner according to the embodiment, which can be combined with other embodiments described herein, includes the second grating **104***b* corresponding to an intermediate grating. While FIGS. **1**A and **1**B depict the angled optical device structures **102** as having square or rectangular shaped cross-sections, the cross-sections of the angled optical device structures **102** may have other shapes including, but not limited to, circular, triangular, elliptical, regular polygonal, irregular polygonal, and/or irregular shaped cross-sections. In some embodiments, which can be combined with other embodiments described herein, the cross-sections of the angled optical device structures **102** on a single optical device **100**A or **100**B are different.

[0017] The substrate **101** may be formed from any suitable material, provided that the substrate **101** can adequately transmit light in a desired wavelength or wavelength range. Substrate selection may include substrates **101** of any suitable material, including, but not limited to, silicon (Si), silicon dioxide (SiO_2), doped SiO_2, fused silica, quartz, silicon carbide (SiC), germanium (Ge), silicon germanium (SiGe), indium phosphide (InP), gallium arsenide (GaAs), gallium nitride (GaN), diamond, or sapphire containing materials.

[0018] FIGS. **2**A and **2**B are schematic, cross-sectional views of a portion **105** of an optical device **100**A or **100**B with a plurality of angled optical device structures **102**. FIGS. **2**A and **2**B are a portion **105** of the optical device **100**A or the optical device **100**B, as shown in FIGS. **1**A and **1**B. Although FIG. **1**A shows the portion **105** corresponding to the first grating **104***a*, the portion **105** is not limited to the first grating **104***a* and may correspond to any of the first grating **104***a*, the second grating **104***b*, or the third grating **104***c*.

[0019] FIG. **2**B depicts the portion **105** of the optical device **100**A or **100**B with a gap-fill material **212** disposed over the plurality of angled optical device structures **102**. It is contemplated that the gap-fill material **212** may be included in the portion **105** for any of the embodiments of the plurality of angled optical device structures **102** described herein.

[0020] The portion **105** of the optical devices **100**A and **100**B include the plurality of angled optical device structures **102** disposed on a surface **103** of a substrate **101**. Each of the angled optical device structures **102** includes an upper surface **210**. The plurality of angled device structures **102** define a plurality of gaps **220**. Each gap of the plurality of gaps **220** is defined between adjacent angled optical device structures **102**.

[0021] Each angled optical device structure of the plurality of angled optical device structures **102** has a critical dimension **202**. In one embodiment, which may be combined with other embodiments described herein, the critical dimension **202** is less than 1 micrometer (μm) and corresponds to the width or the diameter of each angled optical device structure **102**, depending on the cross-section of the angled optical device structure **102**. In one embodiment, which can be combined with other embodiments described herein, at least one critical dimension **202** may be different from another critical dimension **202**. In another embodiment, which can be combined with other embodiments described herein, each critical dimension **202** of the plurality of angled optical device structures **102** is substantially equal to each other critical dimension **202**, as shown in FIGS. **2**A and **2**B. The critical dimension **202** is from about 10 nm to about 300 nm. Adjusting the critical dimension provides for adjustment of the efficiency of the optical devices **100**A and **100**B.

[0022] Each pair of adjacent angled optical device structures **102** has a spacewidth **204**. The spacewidth **204** is defined as the distance between adjacent angled optical device structures **102**. As shown in FIGS. **2**A and **2**B, the spacewidth **204** between each adjacent angled optical device structure **102** is substantially equal. In other embodiments, which can be combined with other embodiments described

herein, at least one spacewidth **204** of adjacent angled optical device structures **102** is different from the spacewidth **204** of other adjacent angled optical device structures **102** of the portion **105**. The spacewidth **204** is between about 150 nm and about 1500 nm.

[0023] Each angled optical device structure **102** of the plurality of angled optical device structures **102** has a height **206**. The height **206** is defined as the distance from the upper surface **210** of the plurality of angled optical device structures **102** to the surface **103** of the substrate **101**. In one embodiment, which can be combined with other embodiments described herein, at least one height **206** of the plurality of angled optical device structures **102** is different that the height **206** of the other angled optical device structures **102**. In another embodiment, which can be combined with other embodiments described herein, each height **206** of the plurality of angled optical device structures **102** is substantially equal, as shown in FIGS. **2**A and **2**B.

[0024] Each adjacent angled optical device structure **102** has a pitch **208**. The pitch **208** is defined as the distance between a first edge **218** of adjacent angled optical device structures **102**. As shown in FIGS. **2**A and **2**B, the pitch **208** of one or more adjacent angled optical device structures **102** is substantially equal to the pitch **208** of other surrounding angled optical device structures **102**. In other embodiments, which can be combined with other embodiments described herein, the pitch **208** of one or more adjacent angled optical device structure **102** is different from the pitch **208** of surrounding angled optical device structures **102**. The pitch **208** is from about 100 nm to about 100 nm.

[0025] The angled optical device structures **102** are formed at a device angle ϑ. The device angle ϑ is the angle between the surface **103** of the substrate **101** and a second edge **222** of the angled optical device structure **102**. In one embodiment, which can be combined with other embodiments described herein, each respective device angle ϑ for each angled optical device structure **102** is substantially equal throughout the portion **105**, as shown in FIGS. **2**A and **2**B. In another embodiment, which can be combined with other embodiments described herein, at least one respective device angle ϑ of the plurality of angled optical device structures **102** is different than another device angle ϑ of the plurality of angled optical device structures **102**. The device angle ϑ is about 0 degrees to about 75 degrees. For example, the device angle ϑ is about 15 degrees to about 65 degrees.

[0026] The plurality of angled optical device structures **102** are formed from a device material. In some embodiments, which can be combined with other embodiments described herein, the device material may have a device material refractive index between about 1.5 and about 2.65. In other embodiments, which can be combined with other embodiments described herein, the device material may have a refractive index between about 2.65 and about 4.0. The device material is chosen to improve the optical properties of the optical device **100**A or **100**B to be formed. For example, the device material is chosen based on the device material refractive index. In some embodiments, which can be combined with other embodiments described herein, the device material includes, but is not limited to, one or more of silicon oxycarbide (SiOC), silicon carbide (SiC), titanium dioxide (TiO_2), silicon dioxide (SiO_2), vanadium (IV) oxide (VOx), aluminum oxide (Al_2O_3), aluminum-doped zinc oxide (AZO), indium tin oxide (ITO), tin dioxide (SnO_2), zinc oxide (ZnO), tantalum pentoxide (Ta_2O_5), silicon nitride (Si_3N_4), zirconium dioxide (ZrO_2), niobium oxide (Nb_2O_5), cadmium stannate (Cd_2SnO_4), silicon carbon-nitride (SiCN) containing materials, or combinations thereof.

[0027] As shown in FIG. **2**B, a gap-fill material **212** is deposited over the plurality of angled optical device structures **102**. The gap-fill material **212** is deposited over the plurality of angled optical device structures **102**. The gap-fill material **212** is a conformal material. In one embodiment, the gap-fill material **212** is disposed over the plurality of angled optical device structures **102**. In another embodiment, the gap-fill material **212** is only disposed in the plurality of gaps **220** such that the gap-fill material does not contact the upper surface **210**.

[0028] The gap-fill material **212** may be chosen based on refractive index such that the refractive index contrast between the gap-fill material **212** and the device material increases. The gap-fill material **212** includes, but is not limited to, silicon oxycarbide (SiOC), titanium dioxide (TiO_2), silicon dioxide (SiO_2), vanadium (IV) oxide (VOX), aluminum oxide (Al_2O_3), indium tin oxide (ITO), zinc oxide (ZnO), tantalum pentoxide (Ta_2O_5), silicon nitride (Si_3N_4), titanium nitride (TiN), zirconium dioxide (ZrO_2), silicon carbon-nitride (SiCN) containing materials, organic polymer materials, fluoride based materials, or combinations thereof. In one embodiment, which can be combined with other embodiments described herein, the device material includes a refractive index greater than the gap-fill material **212**. In another embodiment, which can be combined with other embodiments described herein, the device material includes a refractive index less than the gap-fill material **212**.

[0029] In one embodiment, which can be combined with other embodiments described herein, the gap-fill material **212** can be deposited in each gap **220** of the portion **105**. In one embodiment, which can be combined with other embodiments described herein, the same gap-fill material **212** can be deposited into each gap **220**. In another embodiment, which can be combined with other embodiments described herein, the gap-fill material **212** disposed in each gap **220** is a different gap-fill material **212**. For example, two or more gap-fill materials **212** may be utilized in each of the gaps **220**.

[0030] FIG. **3** is a flow diagram of a method **300** for forming a plurality of angled optical device structures **102** of an optical device **100**A and **100**B as shown in FIGS. **4**A-**4**F. FIGS. **4**A-**4**F are schematic, cross-sectional views of a portion **105** of an optical device **100**A or **100**B during a method **300** for forming a plurality of angled optical device structures **102**. In one embodiment, which can be combined with other embodiments described herein, the portion **105** may correspond to a portion or a whole surface of the substrate **101** of a waveguide combiner, as shown in FIG. **1**A. In another embodiment, which can be combined with other embodiments described herein, the portion **105** may correspond to a portion or a whole surface of the substrate **101** of a flat optical device, as shown in FIG. **1**B. The portion **105** may correspond to one or more gratings **104**. In one embodiment, the portion **105** corresponds to the first grating **104***a*, the second grating **104***b*, and/or the third grating **104***c* of the optical device **100**A and **100**B.

[0031] At operation **301**, as shown in FIG. **4**A, a patterned hardmask **402** is formed. The patterned hardmask **402** is formed over a mandrel material **404**. The mandrel material **404** is disposed on a surface **103** of a substrate **101**. The patterned hardmask **402** includes a plurality of hardmask

structures **408**. Adjacent hardmask structures **408** expose portions of the mandrel material **404**. The mandrel material **404** may be chosen based on etch performance of the mandrel material **404**, as the mandrel material **404** will not always remain on the final optical device **100**A or **100**B. Therefore, the optical properties of the mandrel material **404** are not critical relative to the etch performance of the mandrel material **404**. The mandrel material **404** includes, but is not limited to, silicon oxycarbide (SiOC), titanium dioxide (TiO_2), silicon dioxide (SiO_2), vanadium (IV) oxide (VOX), aluminum oxide (Al_2O_3), indium tin oxide (ITO), zinc oxide (ZnO), tantalum pentoxide (Ta_2O_5), silicon nitride (Si_3N_4), titanium nitride (TiN), zirconium dioxide (ZrO_2), silicon carbon-nitride (SiCN) containing materials, or combinations thereof. The patterned hardmask **402** is formed by disposing a hardmask layer over the mandrel material **404** and subsequently patterning the hardmask layer. The patterned hardmask **402** includes, but is not limited to, silicon nitride (SiN), silicon oxide (SiO), silicon oxycarbide (SiOC), SiCONH, tantalum oxide (TaO), borophosphosilicate glass (BPSG), phosphosilicate glass (PSG), dielectric, or metallic alloy containing materials.

[0032] Each hardmask structure **408** includes a leading edge **415** at a top surface **420** of hardmask structure **408**. Each hardmask structure **408** has a trailing edge **417** at a bottom surface **418** contacting the mandrel material **404**. The patterned hardmask **402** includes a patterned pitch **410** between adjacent trailing edges **417**. The patterned pitch **410** is between about 200 nm and about 2000 nm. Each hardmask structure **408** has a hardmask thickness **413** from the bottom surface **418** to the top surface **420**. The hardmask thickness **413** is constant across the portion **105**. Each hardmask structure **408** has a hardmask structure critical dimension **412**. The hardmask structure critical dimension **412** is from about 50 nm to about 400 nm.

[0033] At operation **302**, as shown in FIG. **4**B, the mandrel material **404** is etched. The mandrel material **404** is exposed to etch beams **401**. The etch beams **401** contact the mandrel material **404** at an etch angle ϕ relative to a surface normal **403** of the surface **103** of the substrate **101**. The angled etch process is one of ion-beam etching, reactive ion etching, electron beam etching, wet etching, or combinations thereof. The angled etch process accelerates the etch beams **401** to the mandrel material **404**. The etch beams **401** have an etch chemistry corresponding to a gas or gas mixture activated to generate the etch beam. The etch beams **401** etch the mandrel material **404** at a higher etch rate than the patterned hardmask **402**. The etch beams **401** contact the mandrel material **404** at the etch angle ϕ relative to the surface normal **403** of the surface **103** of the substrate **101**. The angled etch process forms a plurality of angled mandrels **416** in the mandrel material **404**.

[0034] The plurality of angled mandrels **416** are defined by a plurality of cavities **422**. Each cavity **422** includes a linewidth **424**. The linewidth **424** is controlled by a shadow distance **426** defined as the distance from the leading edge **415** to a first location where the etch beams **401** contact the mandrel material **404**. Therefore, as shown in FIG. **4**B, the shadow distance **426** is defined from the leading edge **415** to an etch location **429** where a leading sidewall **428** of each angled mandrel **416** is to be formed. The shadow distance **426** corresponds to the linewidth **424** as the etch beams **401** provided at the etch angle ϕ do not contact the mandrel material **404** within the shadow distance **426**. Thus, the area defined by the shadow distance **426** and extending down through the mandrel material **404** along the etch angle ϕ forms the leading edge **415** of the plurality of angled mandrels **416**. Therefore, the mandrel material **404** disposed below the shadow distance **426** and extending down along the etch angle ϕ will not be etched as the hardmask structure **408** prevents the etch beams **401** from contacting the mandrel material **404** disposed below the shadow distance **426** and extending down along the etch angle ϕ.

[0035] Adjusting the hardmask structure critical dimension **412** and/or the etch angle ϕ will change the shadow distance **426** and therefore will change the linewidth **424**. The linewidth **424** will affect a critical dimension **202**, a spacewidth **204**, and a pitch **208** of the plurality of angled optical device structures **102** to be formed (shown in FIGS. **2**A-**2**C). The angled etching process forms the plurality of angled mandrels **416** such that the plurality of angled mandrels have a device angle ϑ relative to the surface **103** of the substrate **101**. In one embodiment, which can be combined with other embodiments described herein, the device angle ϑ is substantially the same for each angled mandrel **416**. The device angle ϑ substantially corresponds to the etch angle ϕ.

[0036] As the mandrel material **404** is chosen to have improved etch performance, the improved selectivity of the mandrel material **404** to the patterned hardmask **402** enables the plurality of cavities **422** to be formed. The patterned pitch **410** is substantially large such that etching lag is reduced when forming the angled mandrels **416**. Further, the patterned pitch **410** provides for a decrease in patterning difficulty. The patterned pitch **410** being from 200 nm to about 2000 nm allows for the etching of angled mandrels **416** having a mandrel width **430**, which leads to a faster angled etch rate, leading to time savings. The faster etch rate allows for higher effective selectivity between the mandrel material **404** and the patterned hardmask **402**, which improves etch performance and etch quality. Additionally, the patterned pitch **410** will allow for a simpler patterning process leading to cost savings. The spacewidth **204** decreases reactive ion etching lag effects.

[0037] At operation **303**, as shown in FIG. **4**C, the patterned hardmask **402** is removed and a device material **406** is deposited. The patterned hardmask **402** can be removed by a process that includes, but is not limited to, ion-beam etching, reactive ion etching, electron beam etching, wet etching, or combinations thereof. The device material **406** is deposited on the surface **103** of the substrate **101**. The device material **406** is also deposited on the leading sidewall **428**, a trailing sidewall **434**, and a mandrel upper surface **432** of the plurality of angled mandrels **416**. The device material **406** is deposited conformably to the plurality of angled mandrels **416**. The device material **406** is deposited by one or more processes such as one or more chemical vapor deposition (CVD), flowable CVD (FCVD), directional physical vapor deposition (PVD), atomic layer deposition (ALD), multi-beam-epitaxy (MBE), ion-beam-assisted-deposition (IBAD), epitaxy, spin-on-glass (SoG) or spin-on-coat (SoC) processes. The device material **406** deposited on the leading sidewall **428** and the trailing sidewall **434** of each of the plurality of angled mandrels **416** includes a critical dimension **202**. The critical dimension **202** of the device material **406** disposed on the leading sidewall **428** and the trailing sidewall **434** is substantially the same.

[0038] At operation **304**, as shown in FIG. **4**D, the device material **406** is etched. The device material **406** is exposed to etch beams **401**, such as ion beams. The etch beams **401** contact the device material **406** at an etch angle ϕ relative to the surface normal **403** of the surface **103** of the substrate **101**. The angled etch process is one of ion-beam etching, reactive ion etching, electron beam etching, wet etching, or combinations thereof. The angled etch process accelerates the etch beams **401** to the device material **406**. The etch chemistry may be chosen to allow for only the device material **406** to be removed. The etch beams **401** contact the device material **406** at the etch angle ϕ relative to the surface normal **403** of the surface **103** of the substrate **101**. The angled etch process removes the device material **406** disposed on the surface **103** of the substrate **101** and the mandrel upper surface **432** of the plurality of angled mandrels **416**. Therefore, only the device material **406** disposed on the leading sidewall **428** and the trailing sidewall **434** remain.

[0039] At optional operation **305**, the plurality of angled mandrels **416** are etched. The plurality of angled mandrels **416** are etched to form a plurality of angled optical device structures **102**, as shown in FIGS. **2**A-**2**C. The plurality of angled optical device structures **102** define a plurality of gaps **220**. Each gap of the plurality of gaps **220** is defined between adjacent angled optical device structures **102**. The plurality of angled optical device structures **102** are formed from the device material **406** at a device angle ϑ. The etching the angled mandrels **416** is one of ion-beam etching, reactive ion etching, electron beam etching, wet etching, or combinations thereof. The etch selectivity of the etch beams **401** allows the mandrel material **404** to be etched while the device material **406** remains. The etch beams **401** have an etch chemistry corresponding to a gas or gas mixture activated to generate the etch beam **401**. The plurality of angled mandrels **416** are etched at the etch angle ϕ.

[0040] In some embodiments, the plurality of angled mandrels **416** are not etched entirely from the plurality of gaps **220**. For example, the plurality of angled mandrels **416** may remain in the plurality of gaps. For example, when the inclusion of the mandrel material is beneficial to the optical performance of the optical device **100**A or **100**B to be formed, the mandrel material **404** is not etched.

[0041] Each pair of adjacent angled optical device structures **102** of the plurality of angled optical device structures **102** has the spacewidth **204** and the pitch **208** between each adjacent angled optical device structure **102**. The spacewidth **204** defines the width of the plurality of gaps **220** disposed between each adjacent angled optical device structure **102**. Each of the angled optical device structures **102** has the critical dimension **202**. By adjusting the hardmask structure critical dimension **412**, shown in FIG. **4**A, the plurality of angled mandrels **416** corresponding to the optical device **100**A or **100**B may be tuned as desired. For example, adjusting the hardmask structure critical dimension **412** will allow for the ability to tune the spacewidth **204**, the pitch **208**, and the critical dimension **202** of the plurality of angled optical device structures **102**. As the spacewidth **204**, the pitch **208**, and the critical dimension **202** in the optical device **100**A or **100**B to be formed is known prior the method **300**, the hardmask structure critical dimension **412** is calculated to achieve the desired spacewidth **204**, the pitch **208**, and the critical dimension **202**. Additionally, other parameters such as the hardmask thickness **413** or the etch angle ϕ (which will affect the shadow distance **426**) can be adjusted to achieve the desired spacewidth **204**, the pitch **208**, and the critical dimension **202** of the plurality of angled optical device structures **102**.

[0042] The method **300** described herein allows for the reliable formation of the plurality of angled optical device structures **102** having the critical dimension **202** less than 1 micrometer (μm). The method **300** provides for the number of the plurality of angled optical device structures **102** formed to be double the number of the plurality of angled mandrels **416** formed. For example, as shown in FIGS. **4**A-**4**D, patterning five angled mandrels **416** will allow the formation of ten angled optical device structures **102**. In order to reliably form the plurality of angled optical device structures **102** having the critical dimension **202** less than 1 micrometer (μm), forming the plurality of angled mandrels **416** with substantially large mandrel widths **430** is more controllable than directly etching the plurality of angled optical device structures **102**. For example, the deposition of the device material **406** having the critical dimension **202** onto the angled mandrels **416** is more reliable and controllable, leading to improved optical device performance. Additionally, forming the angled mandrels **416** with the patterned pitch **410** provides etching benefits such as time savings, cost savings, and etch performance.

[0043] In some embodiments, which can be combined with other embodiments described herein, the method **300** may further include depositing gap-fill material **212**. As shown in FIG. **2**B, a gap-fill material **212** is deposited over the plurality of angled optical device structures **102**. In other embodiments, which can be combined with other embodiments described herein, the method **300** may further include depositing a gap-fill material **212**. As shown in FIG. **2**C, the gap-fill material **212** can be deposited into the plurality of gaps **220** of the plurality of angled optical device structures **102**. The gap-fill material **212** may correspond to the mandrel material **404**. The gap-fill material **212** may be deposited in one or more of the plurality of gaps **220**. The gap-fill material **212** and the gap-fill material **212** may be included to improve the optical performance of the optical device **100**A or **100**B to be formed. Following the method **300**, other suitable processing procedures may be performed on the optical device **100**A or **100**B.

[0044] In summation, methods of forming angled optical device structures are described herein. The methods described herein utilize etching a mandrel material with an etch chemistry that is selective to a patterned hardmask, i.e., the mandrel material is etched at a higher rate than the patterned hardmask. Therefore, angled mandrels are formed in the mandrel material such that device material of the angled optical device structures to be formed is deposited on the plurality of angled mandrels. The device material is etched at an etch angle such that a plurality of angled optical device structures remain. The method described herein allows for the reliable formation of the plurality of angled optical device structures having a critical dimension less than 1 micrometer (μm). To reliably form the plurality of angled optical device structures having the critical dimension **202** less than 1 micrometer (μm), depositing device material having the critical dimension onto the angled mandrels is reliable and controllable. The reliable and controllable formation of the plurality of angled optical device structures leads to improved optical device performance.

[0045] While the foregoing is directed to embodiments of the present disclosure, other and further embodiments of the disclosure may be devised without departing from the basic scope thereof, and the scope thereof is determined by the claims that follow.

What is claimed is:

1. A method, comprising:

disposing a hardmask layer on a mandrel material, the mandrel material disposed on a substrate;

patterning the hardmask layer into a plurality of hardmask structures, the hardmask structures defining exposed portions of the mandrel material;

etching the exposed portions of the mandrel material at a first etch angle to form a plurality of angled mandrels having a device angle;

removing the hardmask structures;

depositing a device material on the substrate and on a mandrel upper surface, a leading sidewall, and a trailing sidewall of each of the plurality of angled mandrels; and

removing the device material disposed on the substrate and the mandrel upper surface of the plurality of angled mandrels with an angled etch process at a second etch angle to form a plurality of angled optical device structures having the device angle.

2. The method of claim **1**, further comprising depositing a gap-fill material between at least two adjacent angled optical device structures.

3. The method of claim **2**, wherein the gap-fill material contacts an upper surface of the plurality of angled optical device structures.

4. The method of claim **1**, wherein cross-sections of the plurality of angled optical device structures include circular, triangular, elliptical, regular polygonal, irregular polygonal, or irregular shaped cross-sections.

5. The method of claim **1**, wherein the etching includes ion-beam etching, reactive ion etching, electron beam etching, wet etching, or combinations thereof.

6. The method of claim **1**, wherein the device material includes one or more of silicon oxycarbide (SiOC), titanium dioxide (TiO_2), silicon dioxide (SiO_2), vanadium (IV) oxide (VOx), aluminum oxide (Al_2O_3), aluminum-doped zinc oxide (AZO), indium tin oxide (ITO), tin dioxide (SnO_2), zinc oxide (ZnO), tantalum pentoxide (Ta_2O_5), silicon nitride (Si_3N_4), zirconium dioxide (ZrO_2), niobium oxide (Nb_2O_5), cadmium stannate (Cd_2SnO_4), or silicon carbon-nitride (SiCN) containing materials.

7. The method of claim **1**, wherein the device material is deposited by one or more of chemical vapor deposition (CVD), flowable CVD (FCVD), physical vapor deposition (PVD), atomic layer deposition (ALD), multi-beam-epitaxy (MBE), ion-beam-assisted-deposition (IBAD), epitaxy, spin-on-glass (SoG). or spin-on-coat (SoC) processes.

8. The method of claim **1**, wherein a shadow distance is defined between a leading edge of the hardmask structures and an etch location where the leading sidewall of each angled mandrel is to be formed, wherein the mandrel material within the shadow distance and extending down through the mandrel material along the first etch angle are protected from etch beams by the hardmask structures such that the leading sidewall of each angled mandrel is formed at the etch location.

9. A method, comprising:

disposing a hardmask layer on a mandrel material, the mandrel material disposed on a substrate;

patterning the hardmask layer into a plurality of hardmask structures, the hardmask structures defining exposed portions of the mandrel material;

etching the exposed portions of the mandrel material at a first etch angle to form a plurality of angled mandrels having a device angle;

removing the hardmask structures;

depositing a device material on the substrate and on a mandrel upper surface, a leading sidewall, and a trailing sidewall of each of the plurality of angled mandrels;

removing the device material disposed on the substrate and the mandrel upper surface of the plurality of angled mandrels with an angled etch process at a second etch angle to form a plurality of angled optical device structures having the device angle; and

removing the plurality of angled mandrels between the plurality of angled optical device structures.

10. The method of claim **9**, wherein the etching includes ion-beam etching, reactive ion etching, electron beam etching, wet etching, or combinations thereof.

11. The method of claim **9**, further comprising depositing a gap-fill material over the angled optical device structures.

12. The method of claim **9**, wherein

each angled optical device structure of the plurality of angled optical device structures includes a critical dimension from 10 nm to about 300 nm.

13. The method of claim **9**, wherein the forming the plurality of angled optical device structures includes the plurality of angled optical device structures having a pitch from about 100 nm to about 1000 nm.

14. The method of claim **9**, wherein a shadow distance is defined between a leading edge of the hardmask structure and an etch location where the leading sidewall of each angled mandrel is to be formed, wherein the mandrel material within the shadow distance and extending down through the mandrel material along the first etch angle are protected from etch beams by the hardmask structures such that the leading sidewall of each angled mandrel is formed at the etch location.

15. A method, comprising:

disposing a hardmask layer on a mandrel material, the mandrel material disposed on a substrate;

patterning the hardmask layer into a plurality of hardmask structures, the hardmask structures defining exposed portions of the mandrel material, the plurality of hardmask structures including:

a patterned pitch between adjacent hardmask structures, wherein the patterned pitch is from about 200 nm to about 2000 nm; and

a hardmask structure critical dimension from about 50 nm to about 500 nm;

etching the exposed portions of the mandrel material to form a plurality of angled mandrels at a device angle;

removing the hardmask structures;

depositing a device material on the substrate and on a mandrel upper surface, a leading sidewall, and a trailing sidewall of each of the plurality of angled mandrels;

removing the device material disposed on the substrate and the mandrel upper surface of the plurality of angled mandrels with an angled etch process at an etch angle to form a plurality of angled optical device structures at the device angle; and

removing the plurality of angled mandrels between the plurality of angled optical device structures.

16. The method of claim **15**, further comprising depositing a gap-fill material between at least two adjacent angled optical device structures.

17. The method of claim **16**, wherein the forming the plurality of angled optical device structures includes the plurality of angled optical device structures having a pitch from about 100 nm to about 1000 nm.

18. The method of claim **15**, wherein the device material is deposited by one or more of chemical vapor deposition (CVD), flowable CVD (FCVD), physical vapor deposition (PVD), atomic layer deposition (ALD), multi-beam-epitaxy (MBE), ion-beam-assisted-deposition (IBAD), epitaxy, spin-on-glass (SoG) or spin-on-coat (SoC) processes.

19. The method of claim **15**, wherein the forming the plurality of angled optical device structures includes the plurality of angled optical device structures having a critical dimension from about 10 nm to about 300 nm.

20. The method of claim **15**, wherein the forming the plurality of angled optical device structures includes the plurality of angled optical device structures having a space-width between about 150 nm and about 1500 nm.

* * * * *