US 20230235447A1

(19) **United States**

(12) **Patent Application Publication**

OHNO et al.

(10) **Pub. No.: US 2023/0235447 A1**

(43) **Pub. Date: Jul. 27, 2023**

(54) **COMPOSITE PVD TARGETS**

(71) Applicant: **Applied Materials, Inc.**, Santa Clara, CA (US)

(72) Inventors: **Kenichi OHNO**, Sunnyvale, CA (US); **Takashi KURATOMI**, San Jose, CA (US); **Ludovic GODET**, Sunnyvale, CA (US)

(21) Appl. No.: **18/099,277**

(22) Filed: **Jan. 20, 2023**

Related U.S. Application Data

(60) Provisional application No. 63/301,939, filed on Jan. 21, 2022.

Publication Classification

(51) **Int. Cl.**

C23C 14/34 (2006.01)

C23C 14/50 (2006.01)

(52) **U.S. Cl.**

CPC ***C23C 14/3414*** (2013.01); ***C23C 14/50*** (2013.01)

(57) **ABSTRACT**

Embodiments of the present disclosure generally relate to composite PVD target. The target has a diameter, a connection face, a substrate face opposite the connection face, a thickness between the connection face and the substrate face, and a material distribution. The material distribution includes a silicon containing material arranged in a pattern, and a titanium containing material arranged in the pattern. The material distribution is uniform at any point along the thickness.

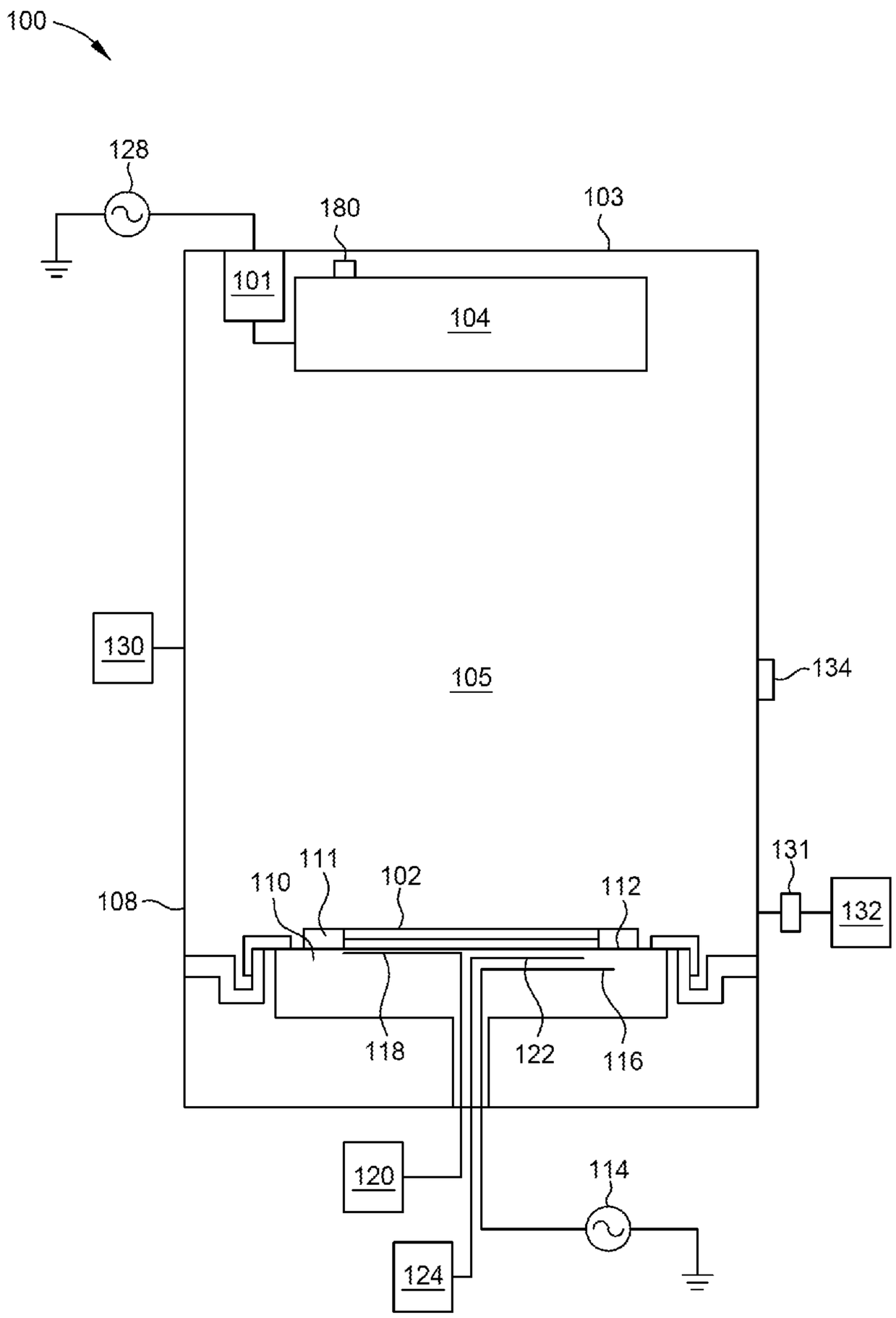

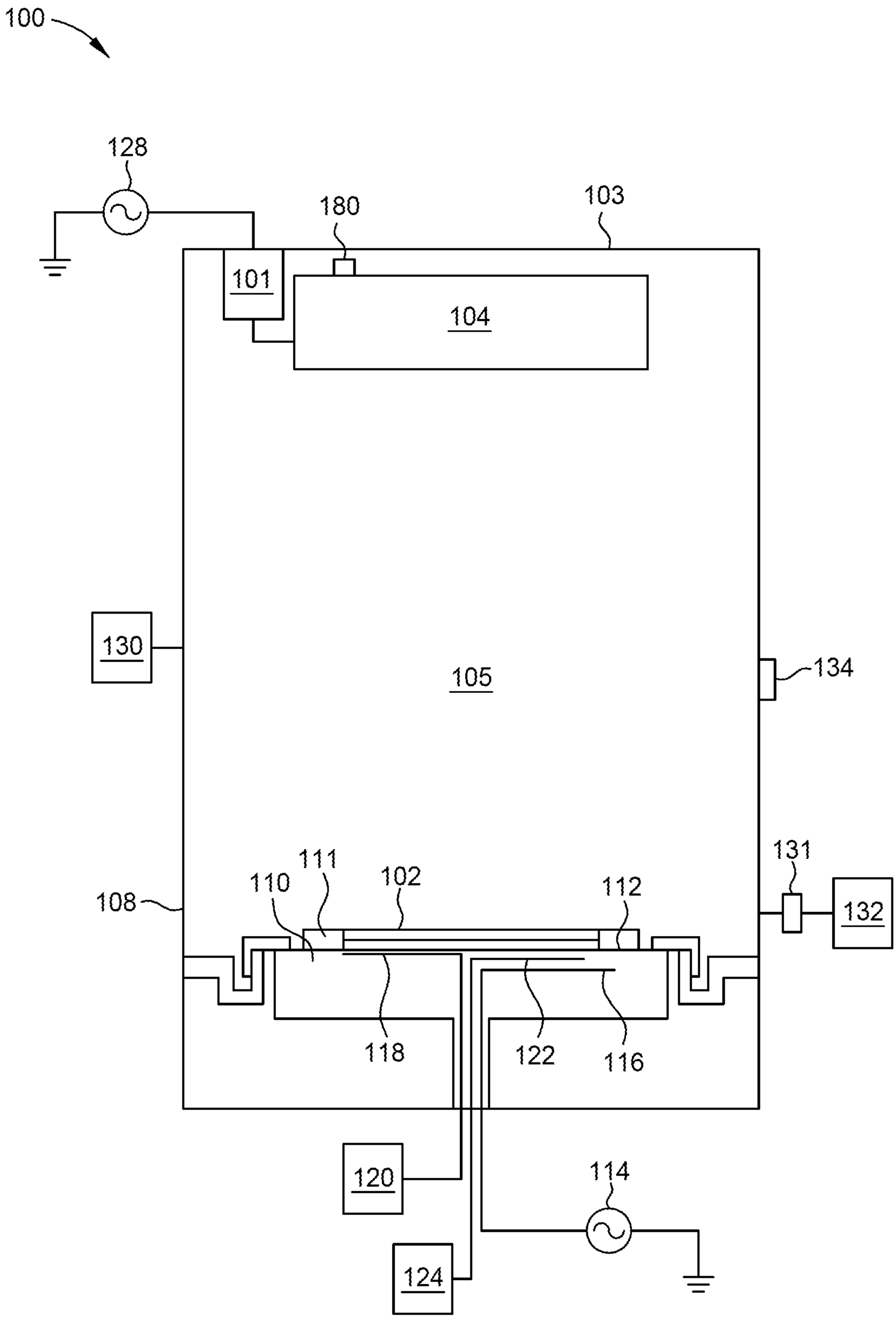
100
128
180
103
101
104
130
105
134
131
111
110
102
112
108
132
118
122
116
120
114
124

FIG. 1

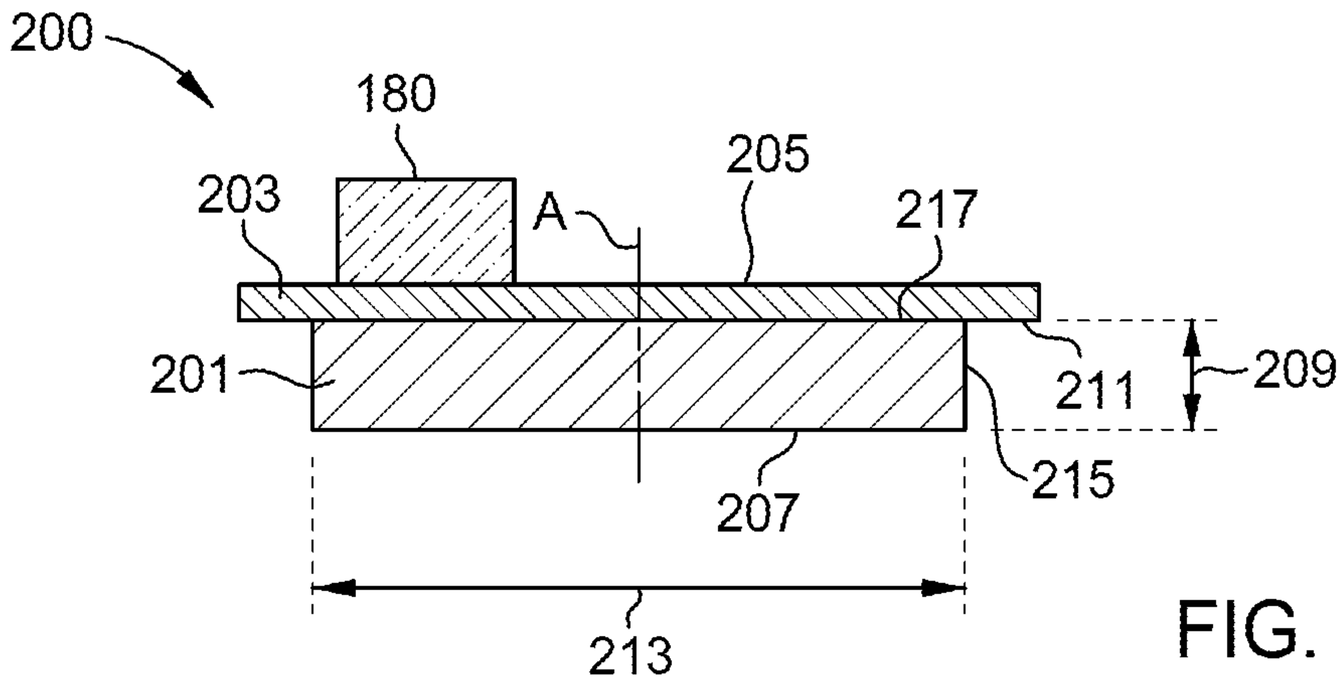

FIG. 2

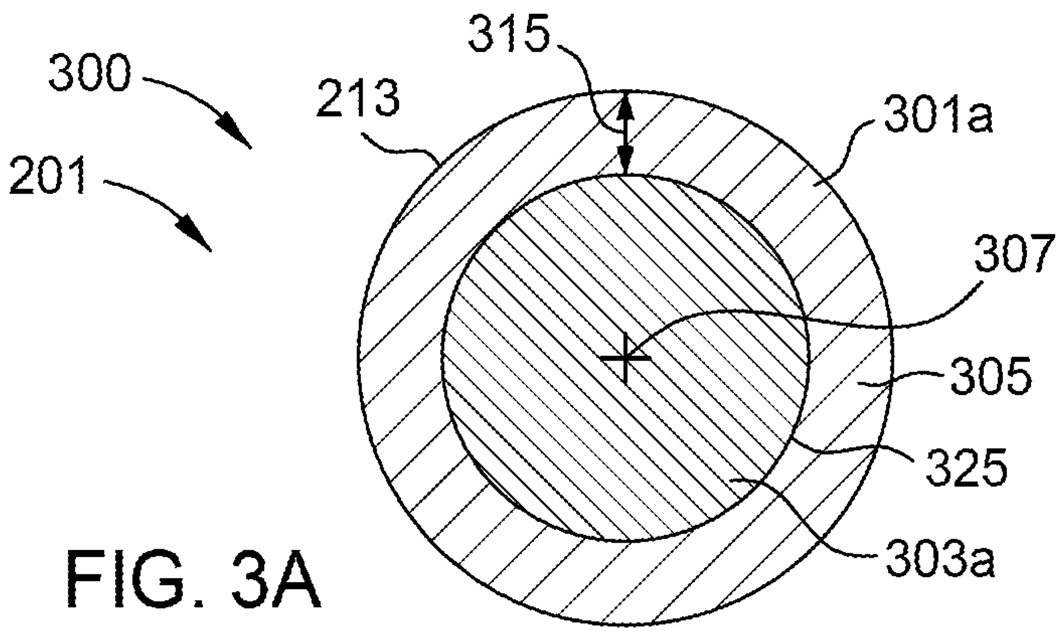

FIG. 3A

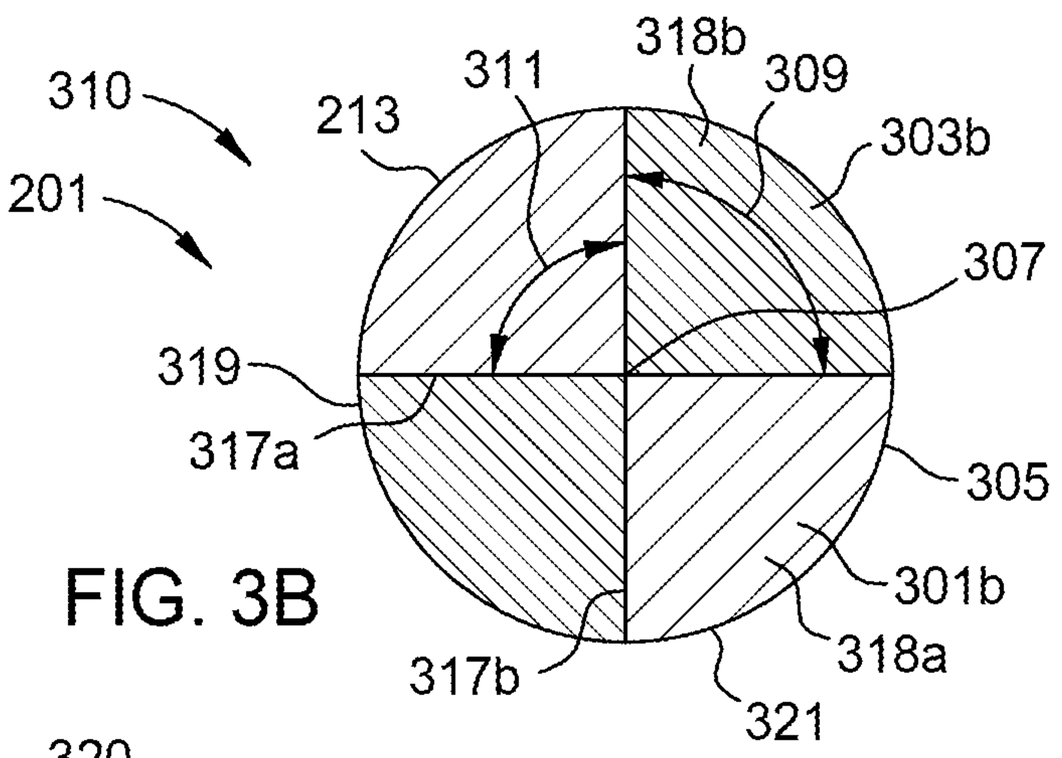

FIG. 3B

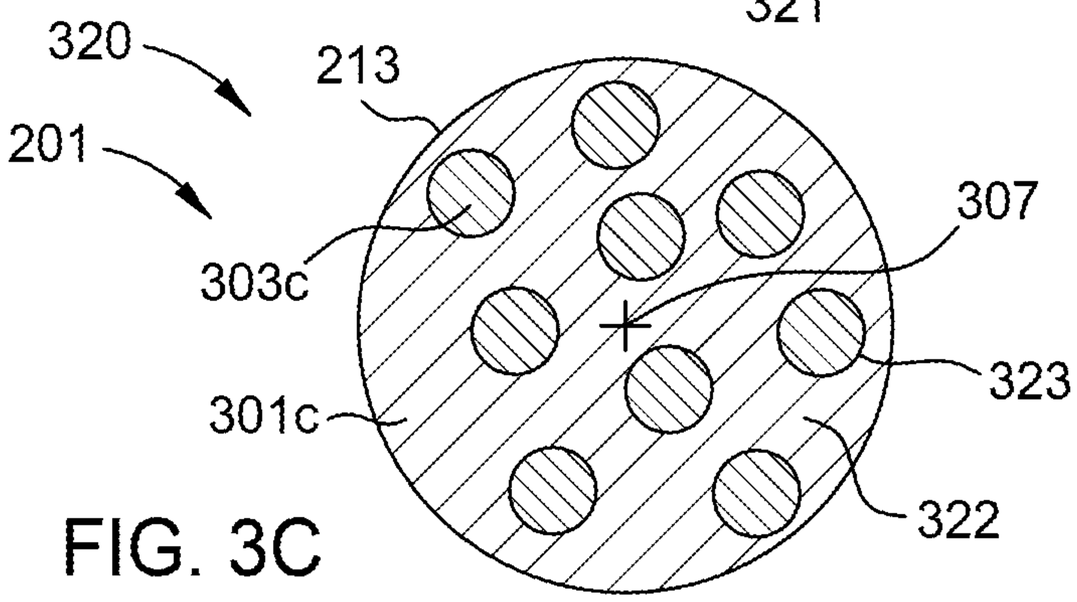

FIG. 3C

COMPOSITE PVD TARGETS

CROSS-REFERENCE TO RELATED APPLICATIONS

[0001] This application claims benefit of U.S. Provisional Patent Application No. 63/301,939, filed on Jan. 21, 2022, the entirety of which is herein incorporated by reference.

BACKGROUND

Field

[0002] Embodiments of the present disclosure generally relate to composite physical vapor deposition (PVD) targets. More specifically, embodiments described herein relate to titanium and silicon PVD composite targets.

Description of the Related Art

[0003] Ternary films are conventionally deposited using multi-cathode (MC) chambers, in which two targets of different composition are utilized. In a MC chamber, power is alternated between the two or more material targets in order to tune the amount of target material sputtered from each target to form a film on a substrate, e.g., TiSiO. However, MC chambers suffer from slow deposition rates. In addition, careful tuning of the power for each target is needed to maintain a predetermined composition profile in the as-deposited material.

[0004] To drive down manufacturing costs, integrated chip (IC) manufacturers demand higher throughput and higher yield from every substrate processed. To increase production, large diameter physical vapor deposition (PVD) targets are preferred. MC chambers are used because two PVD target can be utilized, but the two targets are smaller to fit within the chamber. The smaller targets limit the deposition rates and increase production time and costs.

[0005] $Ti_xSi_yO_z$ materials have various optical applications due to the material's refractive index (RI) tunability based on the specific $Ti_xSi_yO_z$ composition while maintaining reduced optical loss. Previous methods of $Ti_xSi_yO_z$ material deposition in multi-cathode chambers alternated between one or more targets of either Ti or Si in order to achieve the desired $Ti_xSi_yO_z$ composition. Since these conventional targets are smaller to accommodate multiple targets in the MC chamber, the deposition rate was lower and the amount of power utilized was finely tuned in order to achieve desired predetermined composition of $Ti_xSi_yO_z$ film on the substrate. However, as previously discussed, various limitations of MC chambers hamper the efficiency by which $Ti_xSi_yO_z$ materials can be deposited.

[0006] Thus, what is needed in the art is improved apparatus and methods for depositing materials via physical vapor deposition.

SUMMARY

[0007] Composite PVD targets are described herein that include at least two materials and have various patterns on the target face. These improved targets enable multi cathode style processes without the need for two or more separate targets.

[0008] In one embodiment, a composite PVD target is provided. The target includes a diameter, a connection face, a substrate face disposed opposite the connection face, a thickness between the connection face and the substrate face, and a material distribution. The material distribution includes a silicon containing material and a titanium containing material arranged in the pattern. The material distribution is uniform at any point along the thickness.

[0009] In another embodiment, a composite PVD target assembly is provided. The target assembly includes a backing plate and a composite PVD target coupled to a target face of the backing plate. The composite PVD target includes a diameter of at least about 200 mm, a connection face coupled to the backing plate, a substrate face disposed opposite the connection face, a silicon containing material arranged in a first pattern, and a titanium containing material arranged in a second pattern.

[0010] In yet another embodiment, a PVD chamber is provided. The PVD chamber includes a chamber body, a substrate support disposed within the chamber body configured to support a substrate, a composite PVD target assembly disposed within the chamber body on an upper side of the chamber body, and the target assembly is connected to power source. The composite PVD target assembly includes a backing plate and a composite PVD target coupled to a target side of the backing plate. The composite PVD target includes a diameter, a connection face coupled to the backing plate, a substrate face disposed opposite the connection face, a thickness defined by the connection face of the PVD target and the substrate face of the PVD target, and a material distribution. The material distribution includes an annular pattern, a sector pattern, or a random pattern. The material distribution also includes a silicon containing material and a titanium containing material. The silicon containing material and the titanium containing material are uniform at any point along the thickness. The PVD chamber also includes a process volume disposed between a substrate support and the composite PVD target, where the process volume is configured to hold a plasma, and the substrate support is configured to support a substrate. The PVD chamber also includes a gas supply coupled to the chamber body configured to supply gas to the chamber.

BRIEF DESCRIPTION OF THE DRAWINGS

[0011] So that the manner in which the above recited features of the present disclosure can be understood in detail, a more particular description of the disclosure may be had by reference to embodiments, some of which are illustrated in the appended drawings. It is to be noted, however, that the appended drawings illustrate only exemplary embodiments and are therefore not to be considered limiting of its scope, and may admit to other equally effective embodiments.

[0012] FIG. **1** is a schematic, cross-sectional view of a physical vapor deposition (PVD) process chamber, according to embodiments described herein.

[0013] FIG. **2** is a schematic, cross-sectional view of a PVD target assembly, according to embodiments described herein.

[0014] FIG. **3**A illustrates an annular TiSi target pattern, according to embodiments described herein.

[0015] FIG. **3**B illustrates a sector TiSi target pattern, according to embodiments described herein.

[0016] FIG. **3**C illustrates a distributed TiSi target pattern, according to embodiments described herein.

[0017] To facilitate understanding, identical reference numerals have been used, where possible, to designate identical elements that are common to the figures. It is

contemplated that elements and features of one embodiment may be beneficially incorporated in other embodiments without further recitation.

DETAILED DESCRIPTION

[0018] Embodiments of the present disclosure relate to composites targets for physical vapor deposition (PVD). More specifically, embodiments described herein relate to titanium (Ti) and silicon (Si) composite PVD targets.

[0019] Advantages of ternary TiSiO films deployed in optical applications include tuning optical refractive indexes (RIs) while maintaining low optical loss. Targets of the present application can be manufactured with a predetermined composition to achieve desired RIs and/or optical loss. Use of targets with a predetermined composition enables ternary films to be formed with a preselected composition more accurately than conventional approaches using multi-cathode systems.

[0020] FIG. **1** is a schematic, cross-sectional view of a physical vapor deposition (PVD) chamber **100** according to some embodiments. It is to be understood that the PVD chamber **100** described below is an exemplary PVD chamber and other PVD chambers, may be used with or modified to utilize the present disclosure.

[0021] In a PVD process performed in the PVD chamber **100**, material layers or films are formed onto a substrate **102** by sputtering, such as reactive sputtering. The PVD chamber **100** includes a target assembly **104** and a substrate support **110** disposed opposite the target assembly **104**. The target assembly **104** and substrate support **110** are disposed in a process volume **105** configured to receive one or more gases used to form a plasma therein. The PVD chamber **100** also includes a magnet **180**. The magnet **180** is configured to be moveable across the side of the target assembly **104** opposite the process volume **105**. As gas flows into the PVD chamber **100** and is ignited into a plasma. Once the plasma is formed, charged species from the plasma are accelerated toward the target assembly **104**. The charged species collide with a target material to facilitate deposition of a film on a substrate **102** disposed on the substrate support **110** opposite the target assembly **104**.

[0022] In one embodiment, the PVD chamber **100** is utilized to form film coatings for optical devices on a substrate **102**. The PVD chamber **100** includes a substrate carrier **111** disposed on the substrate support **110** which holds the substrate **102**. A target cathode **101** and the target assembly **104** and coupled to a body **108** of the PVD chamber **100**. The target cathode **101** is connected to a power source **128** that provides power to the target assembly **104** and biases the target assembly **104** for PVD sputtering operations.

[0023] The substrate support **110** has a support surface **112** to support the substrate carrier **111** and the substrate **102**. The PVD chamber **100** includes an opening **134** (e.g., a slit valve) in the body **108** through which the substrate **102** enters and exits the process volume **105** of the PVD chamber **100**. The substrate support **110** includes an RF bias power source **114** coupled to a bias electrode **116** disposed in the substrate support **110**. The PVD chamber **100** includes a gas source **136** that provides a sputter gas, such as argon (Ar), or nitrogen (N), combinations thereof, or other suitable sputter gasses (e.g. inert gases) to the process volume **105**.

[0024] The substrate support **110** includes a cooling conduit **118** disposed therein. The cooling conduit **118** controllably cools the substrate support **110**, the substrate carrier **111**, and the substrate **102** positioned thereon to a predetermined temperature. The cooling conduit **118** is coupled to a cooling fluid source **120** which provides a fluid through the cooling conduit **118**. The substrate support **110** also has a heater **122** embedded therein. The heater **122**, such as a resistive element, is coupled to a heater power source **124** and controllably heats the substrate support **110** and the substrate **102** positioned thereon to a predetermined temperature.

[0025] The PVD chamber **100** also includes a gas supply **130** that supplies a process gas to the process volume **105** of the PVD chamber **100**. For example, the gas supply **130** supplies oxygen-containing gas to the process volume **105** to form an oxidizing environment in the process volume **105**. Other examples include the gas supply **130** also supplying a nitrogen-containing gas, an argon and oxygen containing gas, or an argon and nitrogen containing gas to the process volume **105**. The PVD chamber **100** may also include a precursor gas source **132** to supply a precursor gas, for example a gaseous dopant precursor, which is controlled by a flow controller **131**.

[0026] FIG. **2** illustrates a target assembly **200**. In one embodiment, the target assembly **200** is utilized as the target assembly **104** in the PVD chamber **100**. The target assembly **200** includes a target **201** and a backing plate **203**. The target **201** is coupled to the backing plate **203** on a connection face **211** of the backing plate **203** and a connection face **217** of the target **201**. The backing plate **203** has a back face **205** opposite the connection face **211**. The backing plate **203** is larger than the target **201**, but the target **201** and backing plate **203** may be the same size. The backing plate **203** has a circular shape. Alternatively, other shapes are contemplated for the morphology of the backing plate **203**, for example a square or a rectangle. In one embodiment which may be combined with other embodiments, the target **201** is a circular shape. Similar to the backing plate **203**, other shapes are contemplated for the morphology of the target **201**, for example a square or a rectangle.

[0027] The target **201** includes a substrate face **207**, the connection face **217**, a thickness **209**, an outer surface **215**, and an outer diameter **213**. A vertical axis A extends in a direction perpendicular to a major axis of the target **201**. The outer diameter **213** is between about 100 mm and about 600 mm, for example, between about 200 mm and 400 mm. The outer diameter **213** has a correlation or relation to a substrate diameter (not shown). For example, the outer diameter **213** may be at least about equal to the substrate diameter. In another example, the outer diameter **213** is greater than the substrate diameter. The substrate face **207** is a substantially planar surface, but may have surface textures or contours in other embodiments. The thickness **209** of target **201** is defined by the distance between the substrate face **207** and the connection face **217**. The target **201** is a composite material fabricated of at least two different materials. In one embodiment which may be combined with other embodiments, a silicon (Si) material and a titanium (Ti) material are utilized to form the target **201**. The target **201** is substantially uniform across the thickness **209**. The target **201** also includes one or more patterns on the substrate face **207**.

[0028] The target **201** is a composite PVD target of at least a TiSi material. The TiSi composite target is represented as Ti_xSi_y, where x is the concentration (or relative amount per unit volume) of Ti and y is the concentration (or relative

amount per unit volume) of Si. The amounts of x and y in the composite are predetermined and premixed with x+y=100% of the composition of the composite (neglecting impurities and dopants). By predetermining the composition of the composite material, adjustment of process parameters to achieve a predetermined composition during the PVD process can be avoided, which increases throughput and reduces the probability of non-uniform material compositions being deposited on a substrate. In some embodiments which can be combined with other embodiments, x is between 0% and 75% of the composite (thus, y is between 25% and 100%). In other embodiments, x is between 0% and 10% (y between 90% and 100%), x is between 10% and 20% (y is between 80% and 90%), x is between 20% and 30% (y is between 70% and 80%), x is between 30% and 40% (y is between 60% and 70%), x is between 40% and 50% (y is between 50% and 60%), x is between 50% and 60% (y is between 40% and 50%), or x is between 60% and 75% (y is between 25% and 40%). The composition percentages can be by mass, volume, or surface area. The amounts of Ti and Si in the TiSi composite affects the composition of the TiSiO film that is deposited on the substrate. In one example, a higher Ti concentration in the composite would result in a greater amount of Ti in the deposited TiSi film.

[0029] The target **201** is circularly shaped and has a diameter of greater than 400 mm for the processing of a substrate of a diameter greater than 300 mm. However, it is contemplated that the target **201** may be greater than 300 mm, or greater than 200 mm, or greater than 100 mm, or greater than 50 mm, or greater than 10 mm. A larger target has a larger area for plasma exposure, which increases the deposition rate and increases throughput of the composite PVD film deposition process.

[0030] In other embodiments, the target **201** includes composite materials other than TiSi. For example, composites such as niobium-silicon (NbSi) or titanium-niobium (TiNb) are also contemplated by this disclosure for use in PVD processes. For such composites, ratios similar to those for TiSi described above are contemplated.

[0031] FIG. **2** further illustrates the magnet **180** disposed on the back face **205** of the backing plate **203** opposite the target **201**. The magnet **180** is configured to be moveable across the entirety of the backing plate **203**. The plasma characteristics can be controlled or influenced by the location of the magnet **180** to concentrate the plasma to a desired region of the target **201** by positioning the magnet **180** in a desired position on the back face **205** of the backing plate **203**. For example, if a higher concentration of Si than Ti is desired, the magnet **180** may be positioned in relation to an area of the target **201** that has a higher Si concentration. As the magnet **180** is moved from a Si region toward a Ti region, the concentration begins to shift in favor of Ti sputtering because the magnet **180** influences the plasma distribution about the face **207** of the target **201**. In some embodiments, when the magnet **180** is placed at the border of the Si/Ti regions, the concentration of Ti to Si is approximately 1:1. This enables control of the compositions being deposited throughout the PVD process. Multiple magnets are also contemplated. The film deposition characteristics can also be controlled by utilizing different patterns of material distributions **300** on the substrate face **207**, which are described in greater detail below.

[0032] FIGS. **3**A, **3**B, and **3**C illustrate different embodiments of the patterns of material distributions **300**, **310**, **320**, respectively, of the target **201**. The material distributions **300**, **310**, **320** of the target **201** include a first target material **301**, a second target material **303**, a center **307**, and an outer diameter **213** of the target **201**. The first target material **301** may be Si, but may also be Ti. The second target material **303** may be Si, but may also be Ti. Other materials for the first and second target material **301**, **303** are also contemplated. The first target material **301** and second target material **303** are uniform along the thickness **209** of the target **201**. However, non-uniform thicknesses across the target **201** are also contemplated. In some embodiments, the first target material **301** and second target material **303** may be Nb.

[0033] FIG. **3**A illustrates an example of the material distribution **300** having an annular pattern. The annular pattern includes a center circle **325** of a second material **303***a* with an annulus **305** of first material **301***a*. A diameter of the center circle **325** is between about 10 mm and about 450 mm. The annulus **305** includes a thickness **315**. The thickness **315** of the annulus **305** is the distance between the diameter of the center circle **325** and the outer diameter **213** of the target **201**. The thickness **315** may be between about 10 mm and about 250 mm. Additional annuluses alternating between the first material **301***a* and second material **303***a* are also contemplated. For example, a center circle **325** of the first material **301***a* is surrounded by a first annulus **305** of second material **303***a*. The first annulus **305** is then surrounded by a second annulus (not shown) of first material **301***a*. The annulus **305** or alternating annuluses each have an annular thickness **315**. The annular thickness **315** may be equal for each subsequent annulus or may vary based on the process requirements.

[0034] FIG. **3**B illustrates an example of the material distribution **310** having a sector pattern. The sector pattern includes a plurality of sectors **318**. The plurality of sectors **318** includes a plurality of first material sectors **318***a* and a plurality of second material sectors **318***b*. Each of the first material sectors **318***a* includes the first material **301***b* and are defined by a first radius **317***a*, a second radius **317***b*, a first material sector angle **311** between the radii **317***a*, **317***b*, and a first material arc **321** along the outer diameter **213**. Each of the second material sectors **318***b* includes the second material **303***b* and are defined by a first radius **317***a*, a second radius **317***b*, a second material sector angle **309** between the radii **317***a*, **317***b*, and a second material arc **319** along the outer diameter **213**. The first radius **317***a* and the second radius **317***b* each extend from the center **307** of the target **201** to the outer diameter **213**. The first material sector angles **311** and the second material sector angle **309** may each be in the range between about 1° to about 359°, for example about 10° to about 180°, such as about 90°. The plurality of first material sectors **301***b* and the plurality of second material sectors **318***b* alternate around the target center **307**. When the sector angles **309**, **311** are combined, equal 360°. The first material sector angles **311** and the second material sector angles **309** may be equal to each other or varied. FIG. **3**B illustrates a four sector or quadrant embodiment with equal first material sector angles **311** and the second material sector angles **309**, but embodiments with at least two, three, six, eight, and ten or more sectors are also contemplated.

[0035] As shown in the embodiment of FIG. **3**B, the target **201** has four sectors **318** within the outer diameter **213** of the target **201**. The sector angles **309**, **311** are 90° and sectors

318*a*, **318***b* alternate about the center **307**. The first material sector **318***a* is defined by the first radius **317***a*, the second radius **317***b*, the first material sector angle **311** between the radii **317***a*, **317***b*, and the first material arc **321**. The second material sector **318***b* is defined by the first radius **317***a*, the second radius **317***b*, the second material sector angle **309** between the radii **317***a*, **317***b*, and the second material arc **319**. The first material **301***b* of the first material sector **318***a* is a Si containing material (e.g., silicon) and the second material **303***b* of the second material sector **318***b* is a Ti containing material (e.g., titanium). Further, in other embodiments the materials **301***b*, **303***b* may also be Nb or other target material.

[0036] FIG. **3**C illustrates an example of a material distribution **320** having a distributed pattern, according to some embodiments. The target **201** has a target area **322** of the target face **207**, a first material section **301***c* and a plurality of second material sections **303***c* within the first material section **301***c*. The target area **322** is defined by the outer diameter **213**. In some embodiments the first material section **301***c* occupies more of the target area **322** than the second material sections **303***c*. The target area **322** includes a ratio between a total area of the first material section **301***c* and a total area of the second material section **303***c*. The ratio is determined by comparing the percentage of the target area **322** from the first material section **301***c* surface area to the second material section **303***c* surface area. For example, the target area **322** may include between about 10% and 90% first material section **301***c* and between about 10% and 90% second material section **303***c*. In another example, the percentages of the target area **322** may include between about 10% and about 50% first material section **301***c* and between about 10% and about 50% second material section **303***c*. In some embodiments the percentages of the target area **322** may be about 70% first material section **301***c* and about 30% second material section **303***c*. Still further, the percentages of the target area **322** may be about 30% first material section **301***c* and about 70% second material section **303***c*. Additionally, the percentages of the target area **322** may be about 50% first material section **301***c* and about 50% second material section **303***c*. The percentage of the first material section **301***c* and second material section **303***c* should equal about 100% but lower percentages are contemplated to account for dopants and impurities in the target **201**. The surface area ratio is adjustable to produce predetermined characteristics within the process volume **105** and film characteristics on the substrate **102**.

[0037] As illustrated in FIG. **3**C, the plurality of second material sections **303***c* are cylindrical section within the first material section **301***c*, but the sections **303***c* may also be, squared, triangular, squamous, or other shapes. The plurality of second material sections **303***c* may be in a pattern, a pattern offset from the center **307**, or any other geometric or non-geometric arrangement. The plurality of second material sections **303***c* are randomly distributed throughout the first material section **301***c*. The sections **301***c*, **303***c* are uniform along the thickness **209**. The second material sections **303***c* may also be a single section.

[0038] The embodiment of FIG. **3**C illustrates an example where the first material section **301***c* fills most of the target area **322** and a plurality of second material sections **303***c* are circles within the first material section **301***c*. Specifically, there are nine second material sections **303***c* distributed across the target area **322**. The nine circular second material sections **303***c* are defined by a sub diameter **323**. The sub diameter **323** is between about 1 mm to about 100 mm, for example in the range between about 20 mm to about 50 mm. It is to be noted, however, that more or less than material sections **303***c* are contemplated.

[0039] While the foregoing is directed to embodiments of the present disclosure, other and further embodiments of the disclosure may be devised without departing from the basic scope thereof, and the scope thereof is determined by the claims that follow.

What is claimed is:

1. A composite PVD target comprising:
a diameter;
a connection face;
a substrate face disposed opposite the connection face;
a thickness between the connection face and the substrate face; and
a material distribution comprising:
a silicon containing material arranged in a pattern; and
a titanium containing material arranged in the pattern, wherein the material distribution is uniform at any point along the thickness.

2. The composite PVD target of claim **1**, wherein the pattern is an annular pattern, a sector pattern, or a random pattern.

3. The composite PVD target of claim **2**, wherein the annular pattern comprises:
the silicon containing material arranged as a circle; and
the titanium containing material arranged as an annulus.

4. The composite PVD target of claim **2**, wherein the annular pattern comprises:
the titanium containing material arranged as a circle; and
the silicon containing material arranged as an annulus.

5. The composite PVD target of claim **2**, wherein the sector pattern comprises:
the titanium containing material arranged in a plurality of titanium sectors, wherein each titanium sector of the plurality of titanium sectors comprises a titanium sectors angle; and
the silicon containing material arranged in a plurality of silicon sectors, wherein each silicon sector of the plurality of silicon sectors comprises a silicon sectors angle, wherein the titanium sector angles of the plurality of titanium sectors and the silicon sector angles of the plurality of silicon sectors equal about 360°.

6. The composite PVD target of claim **2**, wherein the random pattern comprises:
the titanium containing material arranged randomly; and
the silicon containing material arranged randomly.

7. The composite PVD target of claim **1**, wherein the material distribution comprises more of the titanium containing material than the silicon containing material.

8. The composite PVD target of claim **1**, wherein the diameter of the target is at least about 300 mm.

9. The composite PVD target of claim **1**, wherein the diameter of the target is configured to be greater than a substrate diameter.

10. A composite PVD target assembly, comprising:
a backing plate; and
a composite PVD target coupled to a target face of the backing plate, wherein the composite PVD target comprises:
a diameter of at least about 200 mm;
a connection face coupled to the backing plate;

a substrate face disposed opposite the connection face;
a silicon containing material arranged in a first pattern; and
a titanium containing material arranged in a second pattern.

11. The composite PVD target assembly of claim **10**, wherein a material distribution is uniform at any point between the substrate face and the connection face; and
the first pattern is an annular pattern, a sector pattern, or a random pattern.

12. The composite PVD target assembly of claim **11**, wherein the second pattern is an annular pattern, a sector pattern, or a random pattern.

13. The composite PVD target assembly of claim **12**, wherein the annular pattern comprises:
the silicon containing material arranged as a circle; and
the titanium containing material arranged as an annulus.

14. The composite PVD target assembly of claim **12**, wherein the annular pattern comprises:
the titanium containing material arranged as a circle; and
the silicon containing material arranged as an annulus.

15. The composite PVD target assembly of claim **10**, wherein the target diameter is configured to be greater than a substrate diameter.

16. The composite PVD target assembly of claim **10**, wherein the target diameter is configured to be about equal to a substrate diameter.

17. The composite PVD target assembly of claim **12**, wherein the sector pattern comprises:
the silicon containing material arranged in a plurality of at least one or more silicon sectors, wherein each sector of the plurality of silicon sectors comprises a silicon sector angle; and
the titanium containing material arranged in a plurality of at least one or more titanium sectors, wherein each sector of the plurality of titanium sectors comprises a titanium sector angle.

18. The composite PVD target assembly of claim **12**, wherein the random pattern comprises:
the titanium containing material arranged randomly; and
the silicon containing material arranged randomly.

19. A PVD chamber comprising:
a chamber body;
a substrate support disposed within the chamber body configured to support a substrate;
a process volume disposed between the substrate support and the chamber body, wherein
the process volume is configured to hold a plasma; and
the substrate support is configured to support a substrate;
a gas supply coupled to the chamber body configured to supply a gas;
a composite PVD target assembly disposed within the chamber body, on a upper side of the chamber body, connected to a power source, wherein the composite PVD target assembly comprises:
a backing plate; and
a composite PVD target coupled to a target side of the backing plate, wherein the composite PVD target comprises:
a diameter;
a connection face coupled to the backing plate;
a substrate face disposed opposite the connection face;
a thickness defined by the connection face of the PVD target and the substrate face of the PVD target; and
a material distribution comprising:
a pattern, wherein the pattern is an annular pattern, a sector pattern, or a random pattern;
a silicon containing material arranged in the pattern; and
a titanium containing material arranged in the pattern, wherein the silicon containing material and the titanium containing material are uniform at any point along the thickness.

20. The PVD chamber of claim **19**, wherein the diameter of the composite PVD target is at least about 300 mm.

* * * * *