US 20230251161A1

(19) **United States**

(12) **Patent Application Publication**

WU et al.

(10) **Pub. No.: US 2023/0251161 A1**

(43) **Pub. Date: Aug. 10, 2023**

(54) **HIGH-PRECISION AND HIGH-THROUGHPUT MEASUREMENT OF PERCENTAGE LIGHT LOSS OF OPTICAL DEVICES**

(71) Applicant: **Applied Materials, Inc.**, Santa Clara, CA (US)

(72) Inventors: **Baochen WU**, Santa Clara, CA (US); **Yangyang SUN**, San Jose, CA (US); **Ravi KOMANDURI**, Milpitas, CA (US); **Jinxin FU**, Fremont, CA (US); **Ludovic GODET**, Sunnyvale, CA (US)

(21) Appl. No.: **18/163,766**

(22) Filed: **Feb. 2, 2023**

Related U.S. Application Data

(60) Provisional application No. 63/308,826, filed on Feb. 10, 2022.

Publication Classification

(51) **Int. Cl.**
G01M 11/02 (2006.01)

(52) **U.S. Cl.**
CPC ***G01M 11/0207*** (2013.01)

(57) **ABSTRACT**

Embodiments described herein relate to an optical device metrology system including a light source to emit a light and a non-polarizing beam splitter to split the light into a first photodetector light path and an optical light path. A first photodetector is disposed in the first photodetector light path and measures a total power of the light. The optical device substrate is disposed in the optical light path and splits the light into a second and a third photodetector light path. A second photodetector is disposed in the second photodetector light path from the optical device substrate. The second photodetector measures a reflected power of the light. A third photodetector is disposed in the third photodetector light path. The third photodetector measures a transmitted power of the light. The controller receives measurements from the first, second, and third photodetectors to calculate a percentage light loss within the optical device substrate.

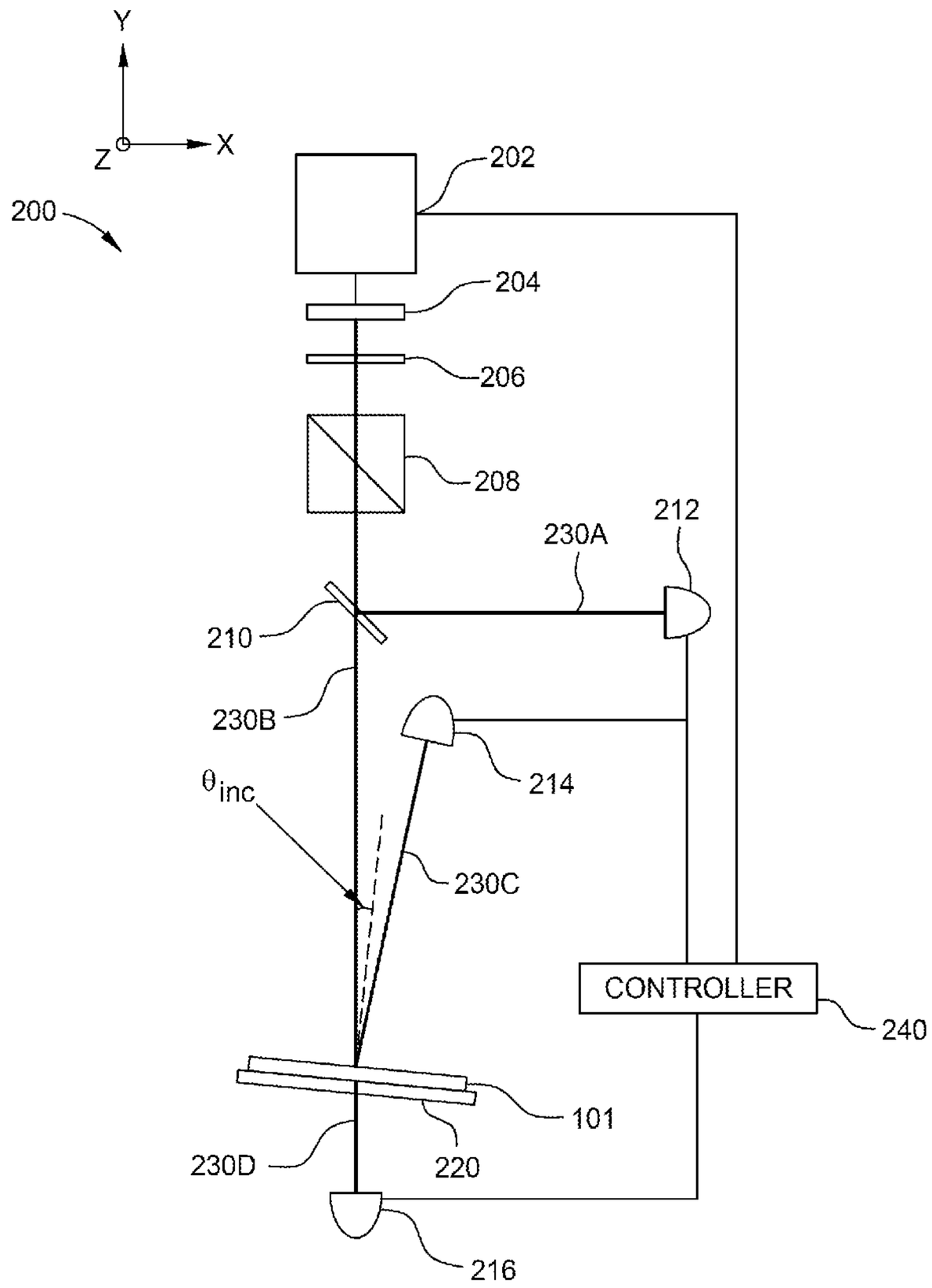

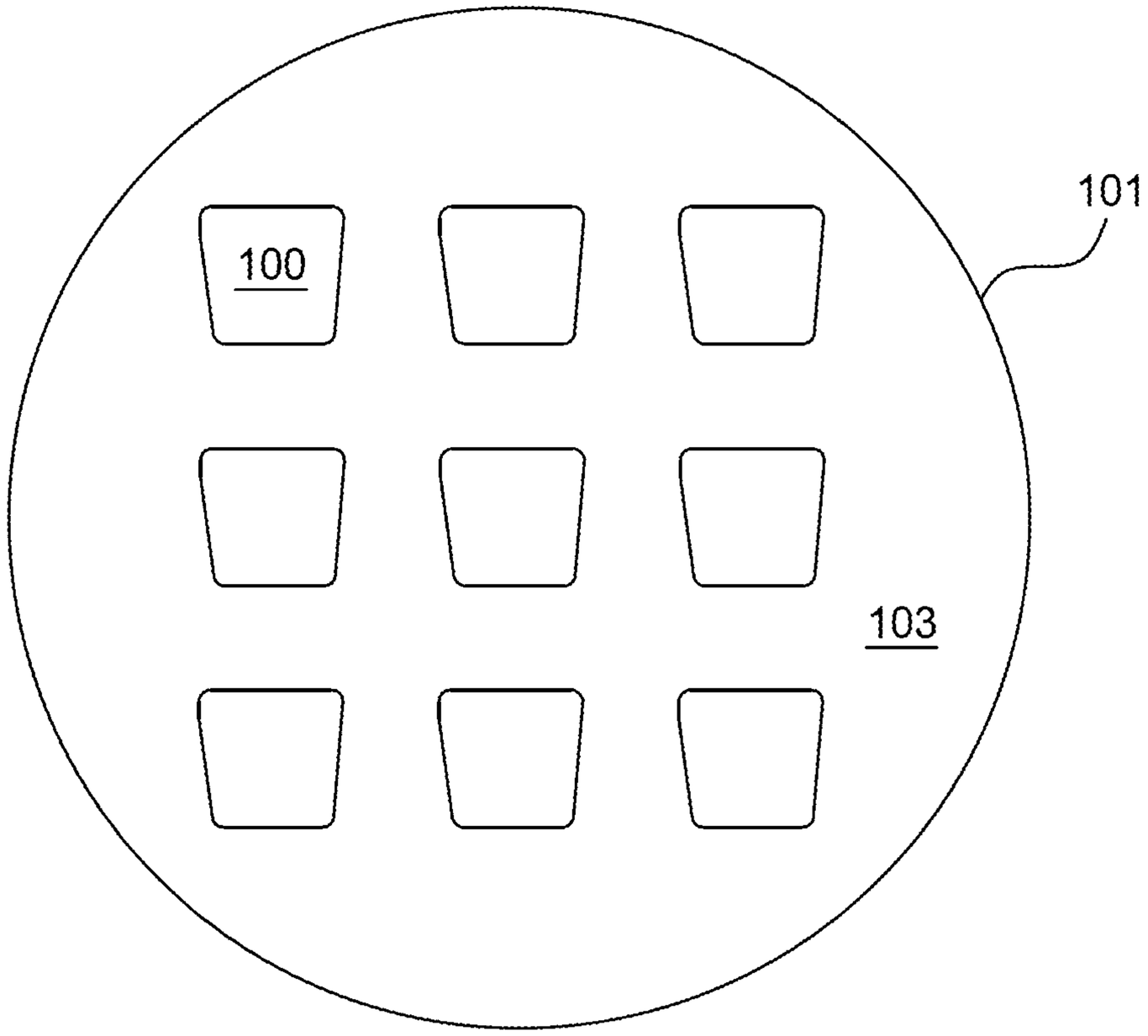

FIG. 1

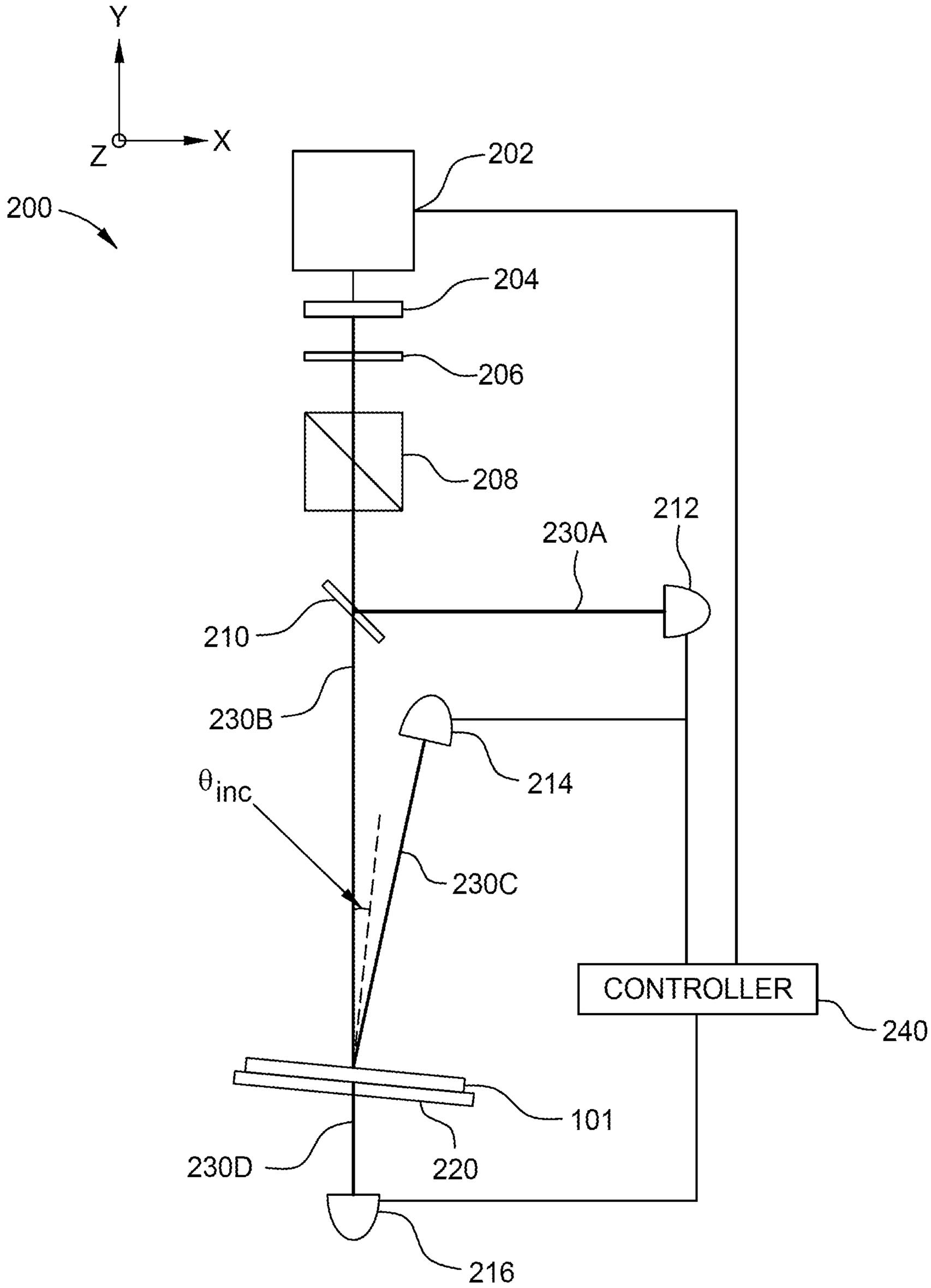
Y
X
Z
200
202
204
206
208
212
230A
210
230B
214
θ_{inc}
230C
CONTROLLER
240
101
220
230D
216

FIG. 2

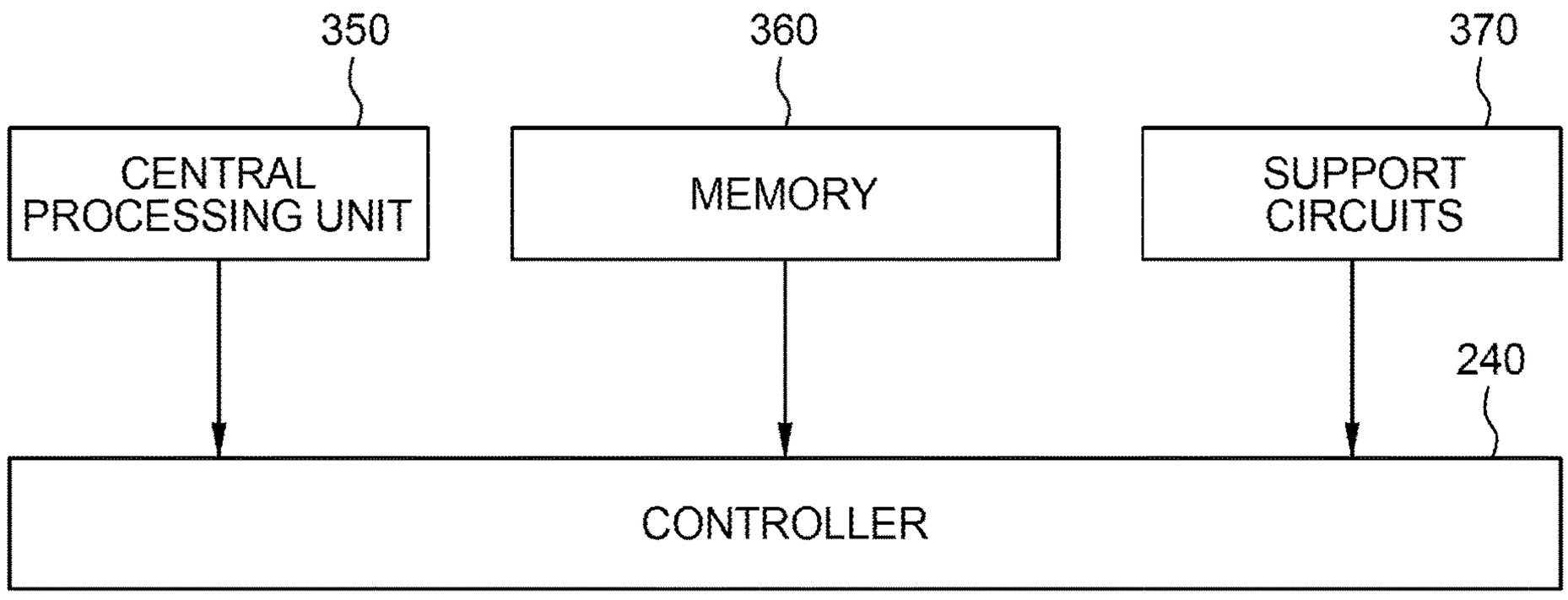
350
360
370
CENTRAL PROCESSING UNIT
MEMORY
SUPPORT CIRCUITS
240
CONTROLLER

FIG. 3

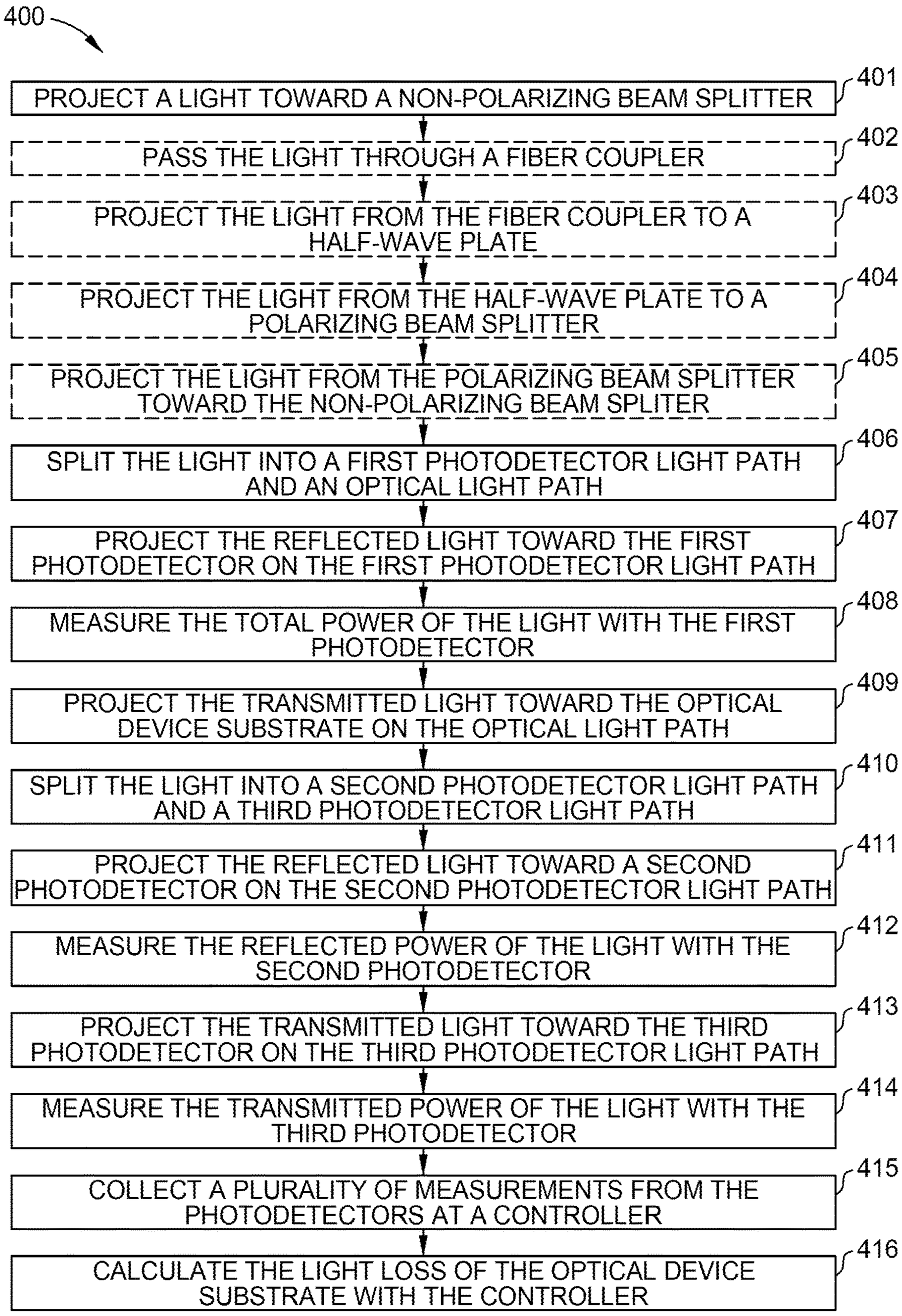
400
PROJECT A LIGHT TOWARD A NON-POLARIZING BEAM SPLITTER
401
PASS THE LIGHT THROUGH A FIBER COUPLER
402
PROJECT THE LIGHT FROM THE FIBER COUPLER TO A HALF-WAVE PLATE
403
PROJECT THE LIGHT FROM THE HALF-WAVE PLATE TO A POLARIZING BEAM SPLITTER
404
PROJECT THE LIGHT FROM THE POLARIZING BEAM SPLITTER TOWARD THE NON-POLARIZING BEAM SPLITER
405
SPLIT THE LIGHT INTO A FIRST PHOTODETECTOR LIGHT PATH AND AN OPTICAL LIGHT PATH
406
PROJECT THE REFLECTED LIGHT TOWARD THE FIRST PHOTODETECTOR ON THE FIRST PHOTODETECTOR LIGHT PATH
407
MEASURE THE TOTAL POWER OF THE LIGHT WITH THE FIRST PHOTODETECTOR
408
PROJECT THE TRANSMITTED LIGHT TOWARD THE OPTICAL DEVICE SUBSTRATE ON THE OPTICAL LIGHT PATH
409
SPLIT THE LIGHT INTO A SECOND PHOTODETECTOR LIGHT PATH AND A THIRD PHOTODETECTOR LIGHT PATH
410
PROJECT THE REFLECTED LIGHT TOWARD A SECOND PHOTODETECTOR ON THE SECOND PHOTODETECTOR LIGHT PATH
411
MEASURE THE REFLECTED POWER OF THE LIGHT WITH THE SECOND PHOTODETECTOR
412
PROJECT THE TRANSMITTED LIGHT TOWARD THE THIRD PHOTODETECTOR ON THE THIRD PHOTODETECTOR LIGHT PATH
413
MEASURE THE TRANSMITTED POWER OF THE LIGHT WITH THE THIRD PHOTODETECTOR
414
COLLECT A PLURALITY OF MEASUREMENTS FROM THE PHOTODETECTORS AT A CONTROLLER
415
CALCULATE THE LIGHT LOSS OF THE OPTICAL DEVICE SUBSTRATE WITH THE CONTROLLER
416

FIG. 4

HIGH-PRECISION AND HIGH-THROUGHPUT MEASUREMENT OF PERCENTAGE LIGHT LOSS OF OPTICAL DEVICES

CROSS-REFERENCE TO RELATED APPLICATIONS

[0001] This application claims benefit of U.S. Provisional Patent Application No. 63/208,826, filed Feb. 10, 2022, which is herein incorporated by reference in its entirety.

BACKGROUND

Field

[0002] Embodiments of the present disclosure generally relate to optical devices. More specifically, embodiments described herein relate to a measurement system and a method to measure percentage light loss of at least one of an optical film, optical device, or an optical device substrate.

Description of the Related Art

[0003] Optical devices including waveguide combiners, such as augmented reality waveguide combiners, and flat optical devices, such as metasurfaces, are used to assist in overlaying images. Generated light is propagated through the optical device until the light exits the optical device and is overlaid on the ambient environment.

[0004] Fabricated optical devices tend to lose light through absorption or scattering as the light is propagated through the optical device or optical device substrate. The optical devices are fabricated from optical device substrates, and in some instances optical films, e.g., when an optical device is fabricated from an optical film disposed on an optical device substrate. It is beneficial to measure the percentage light loss from the optical film and the optical device substrate prior to, during, and after fabricating the optical device.

[0005] Therefore, what is needed in the art is a measurement system and a method to measure percentage light loss of at least one of an optical film, an optical device, or an optical device substrate.

SUMMARY

[0006] In one embodiment, an optical device metrology system is provided. The optical device metrology system includes a light source operable to emit a light, a non-polarizing beam splitter disposed in a path of the light, a first photodetector, a second photodetector, a third photodetector, and a controller. The non-polarizing beam splitter is operable to split the light into a first photodetector light path and an optical light path. The first photodetector is disposed in the first photodetector light path and is operable to measure a total power of the light. The optical device substrate is disposed in the optical light path and operable to split the light into a second photodetector light path and a third photodetector light path. The second photodetector is disposed in the second photodetector light path from the optical device substrate. The second photodetector is operable to measure a reflected power of the light. The third photodetector is disposed in the third photodetector light path. The third photodetector is operable to measure a transmitted power of the light. The controller is operable to receive a plurality of measurements from the first photodetector, second photodetector, and third photodetector to calculate a percentage light loss within the optical device substrate.

[0007] In another embodiment, a method of using an optical device metrology system is provided. The method includes projecting a light from a light source toward a non-polarizing beam splitter; splitting the light into a first photodetector light path and an optical light path at the non-polarizing beam splitter; projecting the light to a first photodetector in the first photodetector light path; measuring a total power of the light in the first photodetector light path at the first photodetector; projecting the light to an optical device substrate in the optical light path; splitting the light into a second photodetector light path and a third photodetector light path at the optical device substrate; projecting the light to a second photodetector in the second photodetector light path; measuring a reflected power of the light in the second photodetector light path at the second photodetector; projecting the light to a third photodetector in the third photodetector light path; measuring a transmitted power of the light in the third photodetector light path at the third photodetector; collecting a plurality of measurements from the first photodetector, second photodetector, and third photodetector at a controller, the plurality of measurements comprising the total power, the reflected power, and the transmitted power; and calculating a percentage light loss at the optical device substrate using the plurality of measurements.

[0008] In yet another embodiment, a controller of an optical device metrology system is provided. The controller stores instructions that, when executed by a computer processor, cause the controller to calculate a percentage light loss of an optical device substrate using a plurality of measurements from a first photodetector, a second photodetector, and a third photodetector. The plurality of measurements are collected by projecting a light from a light source toward a non-polarizing beam splitter, measuring a total power of the light at the first photodetector in the first photodetector light path, measuring a reflected power of the light at the second photodetector in a second photodetector light path, and measuring a transmitted power of the light at the third photodetector in a third photodetector light path. The non-polarizing beam splitter splits the light into a first photodetector light path and an optical light path. The second photodetector light path is formed from the light reflecting off the optical device substrate disposed in the optical light path. The third photodetector light path is formed from the light transmitted through the optical device substrate disposed in the optical light path. The plurality of measurements comprises the total power, the reflected power, and the transmitted power.

BRIEF DESCRIPTION OF THE DRAWINGS

[0009] So that the manner in which the above recited features of the present disclosure can be understood in detail, a more particular description of the disclosure, briefly summarized above, may be had by reference to embodiments, some of which are illustrated in the appended drawings. It is to be noted, however, that the appended drawings illustrate only exemplary embodiments and are therefore not to be considered limiting of its scope, and may admit to other equally effective embodiments.

[0010] FIG. **1** is a perspective, frontal view of an optical device substrate according to embodiments described herein.

[0011] FIG. **2** is a schematic view of an optical device metrology system according to embodiments described herein.

[0012] FIG. **3** is a schematic diagram of a controller according to embodiments described herein.

[0013] FIG. **4** is a flow diagram of a method of determining the percentage light loss according to embodiments described herein.

[0014] To facilitate understanding, identical reference numerals have been used, where possible, to designate identical elements that are common to the figures. It is contemplated that elements and features of one embodiment may be beneficially incorporated in other embodiments without further recitation.

DETAILED DESCRIPTION

[0015] Embodiments of the present disclosure generally relate to optical devices. More specifically, embodiments described herein relate to an optical device metrology system for measuring the light lost in optical films, optical devices, and transparent optical device substrates.

[0016] FIG. **1** is a perspective, frontal view of an optical device substrate **101** according to embodiments described herein. In some embodiments, the optical device substrate **101** includes a plurality of optical devices **100** disposed on a surface **103** of the optical device substrate **101**. The optical devices **100** may be waveguide combiners utilized for virtual, augmented, or mixed reality. In some embodiments, which can be combined with other embodiments described herein, the optical devices **100** are flat optical devices, such as metasurfaces.

[0017] The optical device substrate **101** can be any optical device substrate used in the art, depending on the use of the optical device substrate **101**. Additionally, the optical device substrate **101** may be of varying shapes, thicknesses, and diameters. For example, the optical device substrate **101** may have a diameter of about 150 mm to about 300 mm. The optical device substrate **101** may have a circular, rectangular, or square shape. The optical device substrate **101** may have a thickness of between about 300 μm to about 1 mm. Although only nine optical devices **100** are shown on the optical device substrate **101**, any number of optical devices **100** may be disposed on the surface **103**. The optical metrology system **200** and the method **400** described herein are utilized to measure the percentage light loss of the optical films, optical device substrates **101**, and optical devices **100** described herein.

[0018] FIG. **2** is a schematic view of an optical device metrology system **200**. The optical device metrology system **200** is operable to measure the amount of light lost (e.g., absorbed) by an optical device substrate **101**, an optical film disposed on the optical device substrate **101**, or an optical device **100**. The optical device substrate **101**, optical device **100**, or optical device film of the optical device substrate **101** may be measured at one or more stages of manufacturing.

[0019] The optical device metrology system **200** includes light source **202**, a fiber coupler **204**, a half-wave plate **206**, a polarizing beam splitter **208**, a non-polarizing beam splitter **210**, a first photodetector **212**, a second photodetector **214**, and a third photodetector **216**. The light source **202**, first photodetector **212**, second photodetector **214**, and third photodetector **216** are in communication with a controller **240**.

[0020] The optical device metrology system **200** is operable to support the optical device substrate **101**. The optical device substrate **101** may include at least one optical device **100** disposed on the optical device substrate **101**. In some embodiments, the optical device substrate **101** includes an optical film disposed thereon. In some embodiments, the optical device substrate **101** may be disposed on a substrate support **220** (e.g., an edge ring) to support the optical device substrate **101** in the optical device metrology system **200**.

[0021] The light source **202** is operable to emit a light through the fiber coupler **204**. In one embodiment, which can be combined with other embodiments described herein, the light source **202** is a light-emitting diode (LED). In another embodiment, the light source is a laser, such as a red/green/blue (RGB) laser. The RGB laser can alternately or simultaneously emit a combination of blue light having a wavelength of about 473 nm, green light having a wavelength of about 520 nm, and red light having a wavelength of about 642 nm.

[0022] The light emitted from the light source **202** is split into a first photodetector light path **230**A and an optical light path **230**B at the non-polarizing beam splitter **210**. The first photodetector light path **230**A is directed toward the first photodetector **212**. The first photodetector **212** is operable to measure a total power (P_{tot}) of the light emitted from the light source **202**. The optical light path **230**B is directed toward the optical device substrate **101**.

[0023] The light following the optical light path **230**B is split into a second photodetector light path **230**C and a third photodetector light path **230**D at the optical device substrate **101**. The second photodetector light path **230**C is directed toward the second photodetector **214**. The second photodetector **214** is operable to measure a reflected power (P_{refl}) of the light emitted from the light source **202**. The second photodetector **214** is positioned at an incident angle θ_{inc} relative to the optical light path **230**B. In one embodiment, the θ_{inc} is maintained so that the optical path length inside the optical device substrate **101** stays unchanged as different types of light are emitted from the light source **202**. In one embodiment, the incident angle is about 6°±0.5°. In other embodiments, other angles may be used. The third photodetector light path **230**D is directed toward the third photodetector **216**. The third photodetector **216** is operable to measure a transmitted power (P_{trans}) of the light emitted from the light source **202**.

[0024] The use of the first photodetector **212** disposed in the first photodetector light path **230**A to measure the total power P_{tot}, the second photodetector **214** disposed in the second photodetector light path **230**C to measure the reflected power P_{refl}, and the third photodetector **216** in the third photodetector light path **230**D to measure the transmitted power P_{trans} captures measurements of the power of the projected light at three detection points. The total power P_{tot}, reflected power P_{refl}, and transmitted power P_{trans} along the three separate light paths allows for a fully-optical method of measuring percentage light loss. The optical device metrology system **200** provides for the capture of the three power measurements without contacting the optical device substrate **101** and does not require mode-excitation of the optical device substrate **101**, optical device **100**, or optical film. Measurements without contact and mode-excitation allow for increased precision of the percentage light

loss measurements and increased throughput throughout manufacturing of the optical device substrates **101**, optical devices **100**, or optical films.

[0025] FIG. **3** illustrates the controller **240** of the optical device metrology system **200**. The optical device metrology system **200** is in communication with the controller **240**. The controller **240** facilitates the control and automation of the method **400** for measuring percentage light loss of the optical device substrates **101** described herein. The controller **240** may include a central processing unit (CPU) **350**, a memory **360**, and support circuits **370**. The CPU **350** may be one of any form of computer processors that are used in industrial settings for controlling various processes and hardware (e.g., motors and other hardware) and monitoring the processes (e.g., changes in the percentage light loss in an optical device substrate **101** throughout the manufacturing process). The memory **360** is connected to the CPU and may be readily available memory, such as random access memory (RAM). Software instructions and data can be coded and stored within the memory **360** for instructing the CPU **350**. The support circuits **370** are also connected to the CPU for supporting the processor. The support circuits **370** may include cache, power supplies, clock circuits, input/output circuitry, subsystems, and the like. A program (or computer instructions) readable by the controller determines which tasks are performable on the optical device substrate **101**. The program may be software readable by the controller **340** and may include code to monitor, for example, the change in the percentage light loss in an optical device substrate **101** throughout the manufacturing process or the wavelength of light emitted by the light source **202**.

[0026] The controller **240** is configured to facilitate the operation of the optical device metrology system **200**. In some embodiments, the controller **240** includes one or more inputs (e.g., **3** inputs) for the first photodetector **212**, second photodetector **214**, and third photodetector **216**, and a common ground. The controller **240** is operable to select the wavelength of light that is emitted from the light source **202**. In some embodiments, the controller **240** may emit a red light, a blue light, or a green light simultaneously. In some embodiments, the controller **240** may emit some combination of blue light, red light, or green light simultaneously. In some embodiments, the controller **240** may alternate between a red light, a blue light, and a green light.

[0027] The controller **240** is operable to calculate the percentage light loss of the optical device substrate **101** using a plurality of measurements from the first photodetector **212**, the second photodetector **214**, and the third photodetector **216**. The plurality of measurements includes the total power P_{tot}, the reflected power P_{refl}, and the transmitted power P_{trans}. The three channels give data with both offsets and fluctuations of the order 100 nV.

[0028] Embodiments of the optical device metrology system **200** described herein provide for the ability to eliminate electrical noise, such as DC offsets, to increase the precision of the percentage light loss measurements. The DC offsets can come from, among other things, light source power drift or fluctuations in the photodetector readings. Any DC offsets in the optical device metrology system **200** would be measured by each of the first photodetector **212**, second photodetector **214**, and third photodetector **216**. The controller **240** includes the common ground in order to eliminate the DC offsets. The controller **240** having a common ground between the first photodetector **212**, second photodetector **214**, and third photodetector **216** allows the controller **240** to determine the level of DC offsets in the optical device metrology system **200**. The controller **240** ensures that the obtained power measurements from the first photodetector **212**, second photodetector **214**, and third photodetector **216** are non-floating, allowing for more accurate and precise measurement of the power obtained at each photodetector.

[0029] FIG. **4** is a flow diagram of a method **400** of determining the percentage light loss (e.g., optical loss) with an optical device metrology system **200**. A controller **240** is operable to facilitate the operations of the method **400**. At operation **401**, a light is projected from a light source **202** toward a non-polarizing beam splitter **210**. In some embodiments, at optional operation **402**, the light is passed through a fiber coupler **204** to emit the light. The fiber coupler **204** couples the light from the light source **202** to allow for flexible optics set-ups.

[0030] At optional operation **403**, the light is projected from the fiber coupler **204** to a half-wave plate **206**. The half-wave plate **206** aligns the polarization of the light emitted from the fiber coupler **204**. At optional operation **404**, the light is projected from the half-wave plate to a polarizing beam splitter **208**. The polarizing beam splitter **208** further fine tunes the alignment of the light emitted from the fiber coupler **204** and filters out non-aligned light. At optional operation **405**, the light is projected from the polarizing beam splitter **208** toward the non-polarizing beam splitter **210**.

[0031] At operation **406**, the non-polarizing beam splitter **210** splits the light into a first photodetector light path **230**A and an optical light path **230**B. A first photodetector **212** is disposed in the first photodetector light path **230**A. The first photodetector light path **230**A is formed from the light that reflects off the non-polarizing beam splitter **210**. An optical device substrate **101** is disposed in the optical light path **230**B. The optical light path **230**B is formed from the light that is transmitted through the non-polarizing beam splitter **210** and travels toward the optical device substrate **101**.

[0032] At operation **407**, the light that is reflected off the non-polarizing beam splitter **210** is projected towards to the first photodetector **212** on the first photodetector light path **230**A. At operation **408**, the total power P_{tot} is measured by the first photodetector **212**. The non-polarizing beam splitter **210** has a transmission/reflection splitting ratio. The total power (P_{tot}) is calculated using a splitting ratio of the non-polarizing beam splitter **210**. The non-polarizing beam splitter **210** can split the light from about 20% reflection (80% transmission) to about 80% reflection (20% transmission). In one embodiment, the light that is projected towards the first photodetector **212** and the light traveling toward the optical device substrate **101** are oriented at about a 90-degree angle to one another, though other angles are contemplated by this disclosure.

[0033] At operation **409**, the light that is transmitted through the non-polarizing beam splitter **210** is projected towards the optical device substrate **101** on the optical light path **230**B. In some embodiments, the optical device substrate **101** includes an optical film disposed over the optical device substrate **101**. In some embodiments, the optical film is a patterned optical film. In some embodiments, the optical device substrate **101** includes one or more optical devices. At operation **410**, the optical device substrate **101** splits the light into a second photodetector light path **230**C and a third photodetector light path **230**D. When the light interacts with

the optical device substrate **101**, a portion is absorbed within the optical device substrate **101** (e.g., a percentage light loss l), a portion is reflected (e.g., reflected power P_{refl}), and a portion is transmitted (e.g., transmitted power P_{trans}). A second photodetector **214** is disposed in the second photodetector light path **230**C. A third photodetector **216** is disposed in the third photodetector light path **230**D.

[0034] At operation **411**, the portion of light that is reflected off the optical device substrate **101** is projected towards the second photodetector **214** on the second photodetector light path **230**C. At operation **412**, the reflected power P_{refl} is measured by the second photodetector **214**. The second photodetector **114** is positioned at an incident angle θ_{inc} relative to the optical light path **230**B. In one embodiment, the θ_{inc} is maintained so that the optical path length inside the optical device substrate **101** stays unchanged as different types of light are emitted from the light source **202**. In one embodiment, the incident angle is about 6°±0.5°. In some embodiments, other angles may be used.

[0035] At operation **413**, the portion of light that is transmitted through the optical device substrate **101** is projected towards the third photodetector **216** on the third photodetector light path **230**D. At operation **414**, the transmitted power P_{trans} is measured by the third photodetector **216**.

[0036] At operation **415**, a controller **240** collects a plurality of measurements from the first photodetector **212**, the second photodetector **214**, and the third photodetector **216**. The plurality of measurements comprises the total power P_{tot}, the reflected power P_{refl}, and the transmitted power P_{trans}. The total power P_{tot}, reflected power P_{refl}, and transmitted power P_{trans} are measured simultaneously at the first photodetector **212**, the second photodetector **214**, and the third photodetector **216**, respectively, to reduce drift or fluctuations in the light source **202**. In some embodiments, the optical loss for blue light, green light, and red light can be measured individually.

[0037] At operation **416**, the controller **240** calculates the percentage light loss l at the optical device substrate **101** using the plurality of measurements. The percentage light loss l (e.g., optical loss) can be measured using equation (1):

$$l = 1 - \frac{P_{refl}}{P_{tot}} - \frac{P_{trans}}{P_{tot}} \quad (1)$$

[0038] In some embodiments, the percentage light loss of the optical device substrate **101** is calculated before the optical device substrate **101** has been processed. In other embodiments, the percentage light loss of the optical device substrate **101** is calculated during the processing of the optical device substrate **101**. In still other embodiments, the percentage light loss of the optical device substrate **101** is calculated after the processing of the optical device substrate **101**. In still other embodiments, the percentage light loss of the optical device substrate **101** is calculated before, during, and after processing, or some combination thereof.

[0039] The method **400** is able to give measurements from the first photodetector **212**, second photodetector **214**, and third photodetector **216** in about the 100 mV range, allowing the three channels give data with both offsets and fluctuations on the order of 100 nV (e.g., 10^{-6} precision). A fully-optical method allows for high-throughput and measurement of percentage light loss with wavelengths ranging from ultraviolet to infrared. A fully-optical method means that the optical device substrate **101** that is being measured interacts only with the light projected onto it, and not with any other physical apparatus. The design is compatible with multiple substrate chuck designs, allowing full automation of the measurement.

[0040] In summation, optical device metrology systems and methods of calculating the percentage light loss of an optical device substrate or optical device are provided herein. The optical device metrology system splits an emitted light into a first photodetector light path and an optical light path. The optical device substrate splits the light into a second photodetector light path and a third photodetector light path. A first photodetector is disposed in the first photodetector light path, a second photodetector is disposed in the second photodetector light path, and a third photodetector is disposed in a third photodetector light path. The use of the photodetectors captures measurements of the power of the projected light at three detection points along the three separate light paths. The total power P_{tot}, reflected power P_{refl}, and transmitted power P_{trans} along the three separate light paths allows for a fully-optical method of measuring percentage light loss. The optical device metrology system provides for the capture of the three powers measurements without contacting the optical device substrate and does not require mode-excitation of the optical device substrate, optical device, or optical film. Measurements without contact and mode-excitation allow for increased precision of the percentage light loss measurements and increased throughput throughout manufacturing of the optical device substrates, optical devices, or optical films. The percentage light loss is calculated at a controller, which receives the measurements from the first photodetector, second photodetector, and third photodetector. The percentage light loss can be calculated before, during, or after processing the optical device substrate or optical device, enabling higher throughput. A common ground eliminates DC offsets within the optical device metrology system, allowing for the optical metrology system to measure offsets and fluctuations on the order of 100 nV (e.g., 10^{-6} precision of percentage light loss measurements).

What is claimed is:

1. An optical device metrology system, comprising:

a light source operable to emit a light;

a non-polarizing beam splitter disposed in a path of the light, the non-polarizing beam splitter operable to split the light into a first photodetector light path and an optical light path;

a first photodetector disposed in the first photodetector light path operable to measure a total power of the light;

a second photodetector disposed in a second photodetector light path from an optical device substrate, wherein the optical device substrate is disposed in the optical light path and operable to split the light in the second photodetector light path into the second photodetector light path and a third photodetector light path, the second photodetector operable to measure a reflected power of the light;

a third photodetector disposed in the third photodetector light path, the third photodetector operable to measure a transmitted power of the light; and

a controller, the controller operable to receive a plurality of measurements from the first photodetector, second

photodetector, and third photodetector to calculate a percentage light loss within the optical device substrate.

2. The optical device metrology system of claim **1**, wherein the second photodetector is positioned at an incident angle of about 5.5° to about 6.5° from the optical light path.

3. The optical device metrology system of claim **1**, wherein the controller comprises a common ground for the plurality of measurements.

4. The optical device metrology system of claim **1**, further comprising:

a half-wave plate; and

a polarizing beam splitter, wherein the half-wave plate and polarizing beam splitter are operable to align the polarization of the light emitted from the light source.

5. The optical device metrology system of claim **1**, wherein a substrate support is operable to support the optical device substrate.

6. The optical device metrology system of claim **1**, the optical device metrology system is non-mode excitation.

7. A method, comprising:

projecting a light from a light source toward a non-polarizing beam splitter;

splitting the light into a first photodetector light path and an optical light path at the non-polarizing beam splitter;

projecting the light to a first photodetector in the first photodetector light path;

measuring a total power of the light in the first photodetector light path at the first photodetector;

projecting the light to an optical device substrate in the optical light path;

splitting the light into a second photodetector light path and a third photodetector light path at the optical device substrate;

projecting the light to a second photodetector in the second photodetector light path;

measuring a reflected power of the light in the second photodetector light path at the second photodetector;

projecting the light to a third photodetector in the third photodetector light path;

measuring a transmitted power of the light in the third photodetector light path at the third photodetector;

collecting a plurality of measurements from the first photodetector, second photodetector, and third photodetector at a controller, the plurality of measurements comprising the total power, the reflected power, and the transmitted power; and

calculating a percentage light loss at the optical device substrate using the plurality of measurements.

8. The method of claim **7**, further comprising:

passing the light from the light source through a fiber coupler;

projecting the light from the fiber coupler to a half-wave plate;

projecting the light from the half-wave plate to a polarizing beam splitter; and

projecting the light from the polarizing beam splitter toward the non-polarizing beam splitter.

9. The method of claim **7**, wherein the method is a fully-optical method.

10. The method of claim **7**, wherein the percentage light loss of the optical device substrate can be measured before a processing of the optical device substrate, during the processing of the optical device substrate, after the processing of the optical device substrate, or a combination thereof.

11. The method of claim **7**, wherein the second photodetector is positioned at an incident angle of about 5.5° to about 6.5° from the optical light path.

12. The method of claim **7**, wherein a substrate support is operable to support the optical device substrate.

13. The method of claim **7**, wherein the controller comprises a common ground for the plurality of measurements.

14. A controller of an optical device metrology system storing instructions that, when executed by a computer processor, cause the controller to:

calculate a percentage light loss of an optical device substrate using a plurality of measurements from a first photodetector, a second photodetector, and a third photodetector, wherein the plurality of measurements are collected by:

projecting a light from a light source toward a non-polarizing beam splitter, wherein the non-polarizing beam splitter splits the light into a first photodetector light path and an optical light path;

measuring a total power of the light at the first photodetector in the first photodetector light path;

measuring a reflected power of the light at the second photodetector in a second photodetector light path, wherein the second photodetector light path is formed from the light reflecting off the optical device substrate disposed in the optical light path; and

measuring a transmitted power of the light at the third photodetector in a third photodetector light path, wherein the third photodetector light path is formed from the light transmitted through the optical device substrate disposed in the optical light path;

wherein the plurality of measurements comprises the total power, the reflected power, and the transmitted power.

15. The controller of claim **14**, wherein a substrate support is operable to support the optical device substrate.

16. The controller of claim **14**, wherein the controller further comprises a common ground for the plurality of measurements.

17. The controller of claim **14**, wherein the controller is operable to select a wavelength of light that is emitted from the light source.

18. The controller of claim **17**, wherein the wavelength of light comprises a blue light, a red light, a green light, or a combination thereof.

19. The controller of claim **14**, wherein the second photodetector is positioned at an incident angle of about 5.5° to about 6.5° from the optical light path.

20. The controller of claim **14**, wherein the percentage light loss of the optical device substrate can be measured before a processing of the optical device substrate, during the processing of the optical device substrate, after the processing of the optical device substrate, or a combination thereof.

* * * * *