US 20230408928A1

(19) **United States**

(12) **Patent Application Publication**

XU et al.

(10) **Pub. No.: US 2023/0408928 A1**

(43) **Pub. Date: Dec. 21, 2023**

(54) **AUTOMATED METROLOGY METHOD FOR LARGE DEVICES**

(71) Applicant: **Applied Materials, Inc.**, Santa Clara, CA (US)

(72) Inventors: **Yongan XU**, Santa Clara, CA (US); **Jin XU**, Sunnyvale, CA (US); **Ludovic GODET**, Sunnyvale, CA (US)

(21) Appl. No.: **18/332,027**

(22) Filed: **Jun. 9, 2023**

Related U.S. Application Data

(60) Provisional application No. 63/366,110, filed on Jun. 9, 2022.

Publication Classification

(51) **Int. Cl.**

G03F 7/20	(2006.01)
G03F 9/00	(2006.01)

(52) **U.S. Cl.**

CPC ***G03F 7/70475*** (2013.01); ***G03F 7/70633*** (2013.01); ***G03F 9/7046*** (2013.01); ***G03F 7/70683*** (2013.01); ***G03F 9/7088*** (2013.01)

(57) **ABSTRACT**

A system, software application, and method for optical device metrology of optical device patterns formed from lithography stitching are provided. In one example, the method includes creating a stitched design file comprising images of a plurality of masks; defining target coordinates for each of the plurality of masks in the stitched design file; defining an alignment mark for the stitched design file; capturing images of an optical device pattern at each of the target coordinates; comparing the captured images of the optical device pattern at each of the target coordinates to virtual images of the stitched design file at each of the target coordinates; and determining whether the optical device pattern at each of the target coordinates meets a threshold value.

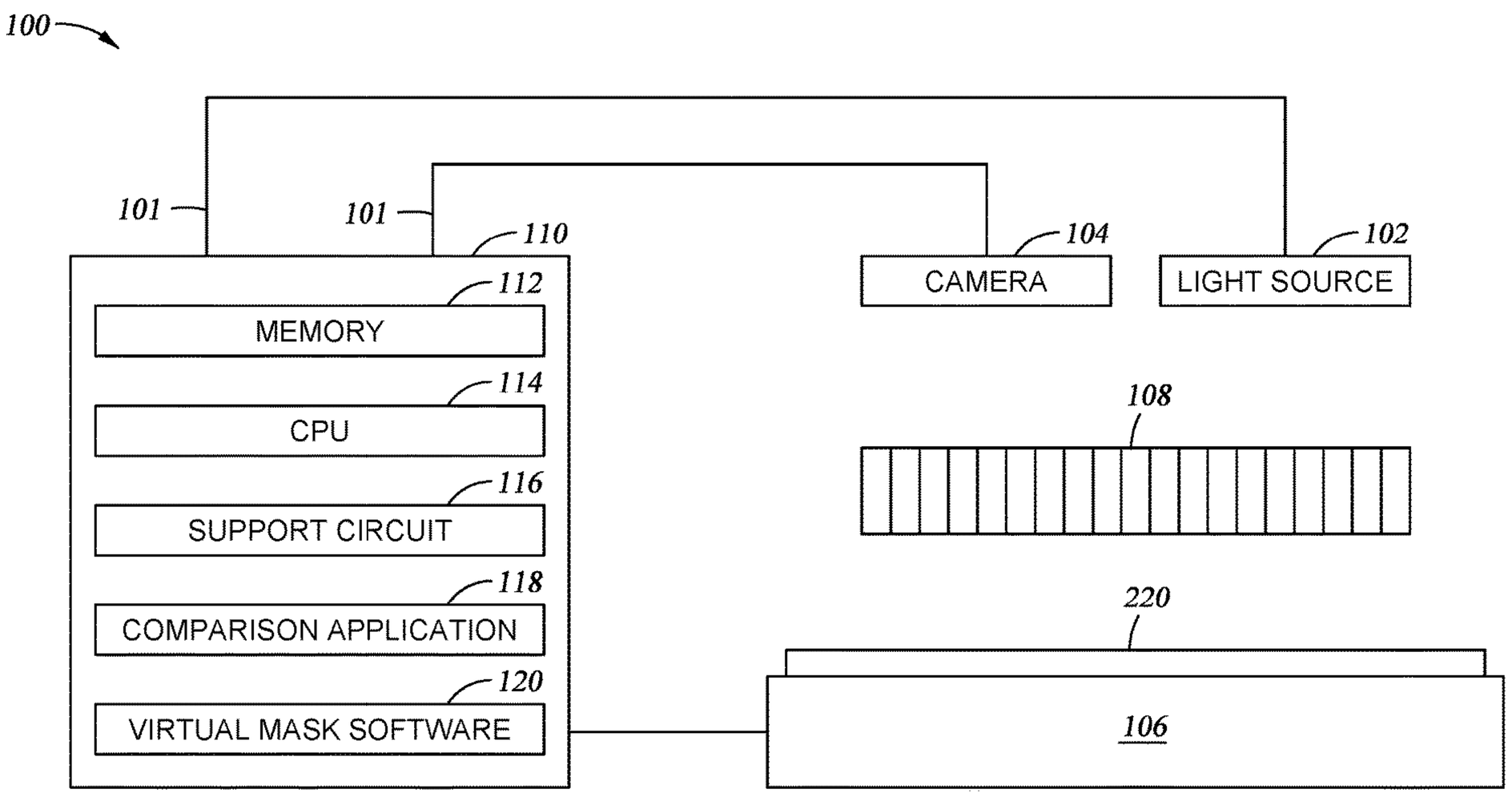

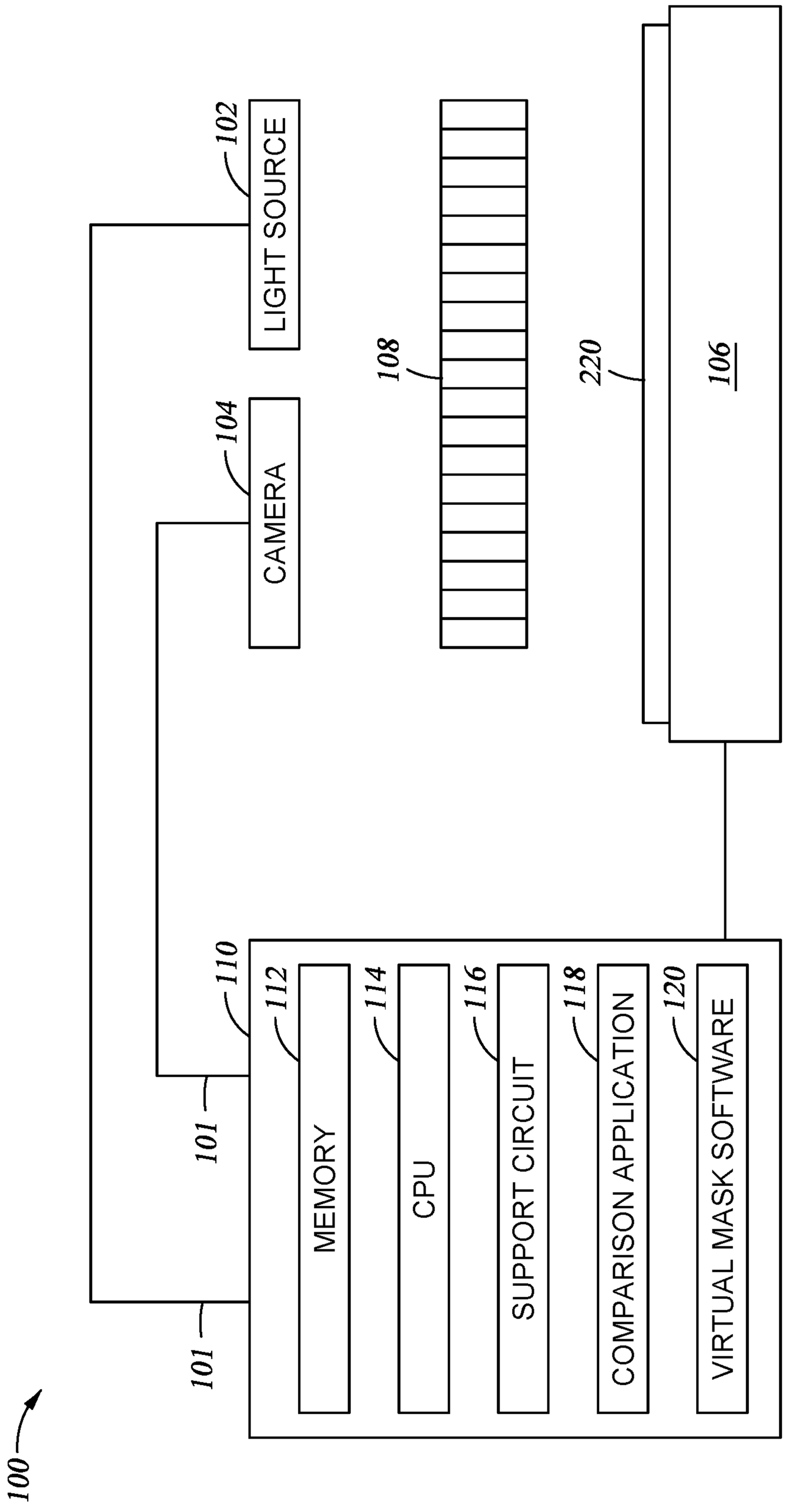
100
101
102
LIGHT SOURCE
104
CAMERA
108
220
106
110
112
MEMORY
114
CPU
116
SUPPORT CIRCUIT
118
COMPARISON APPLICATION
120
VIRTUAL MASK SOFTWARE

Fig. 1

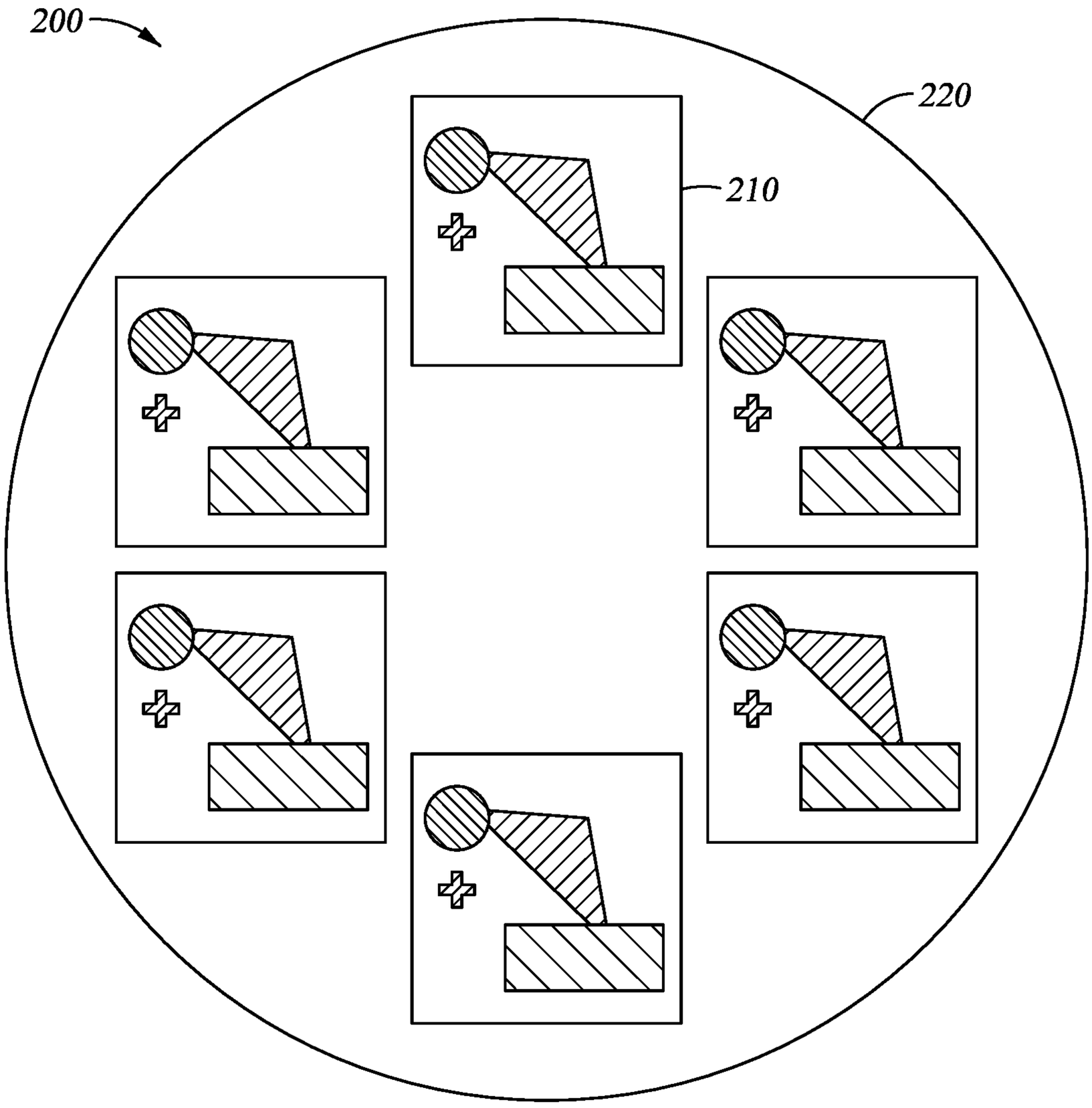

Fig. 2A

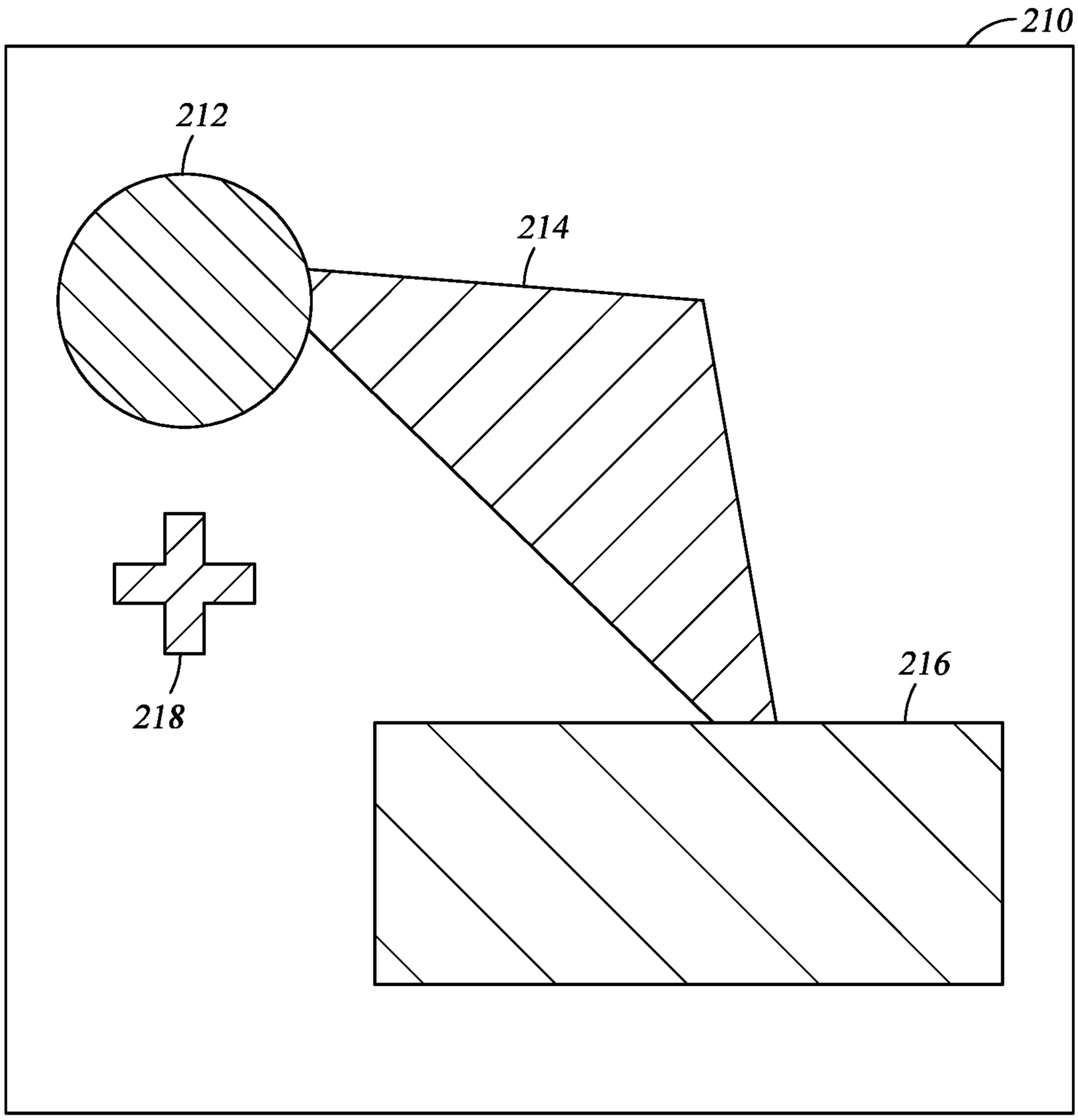

Fig. 2B

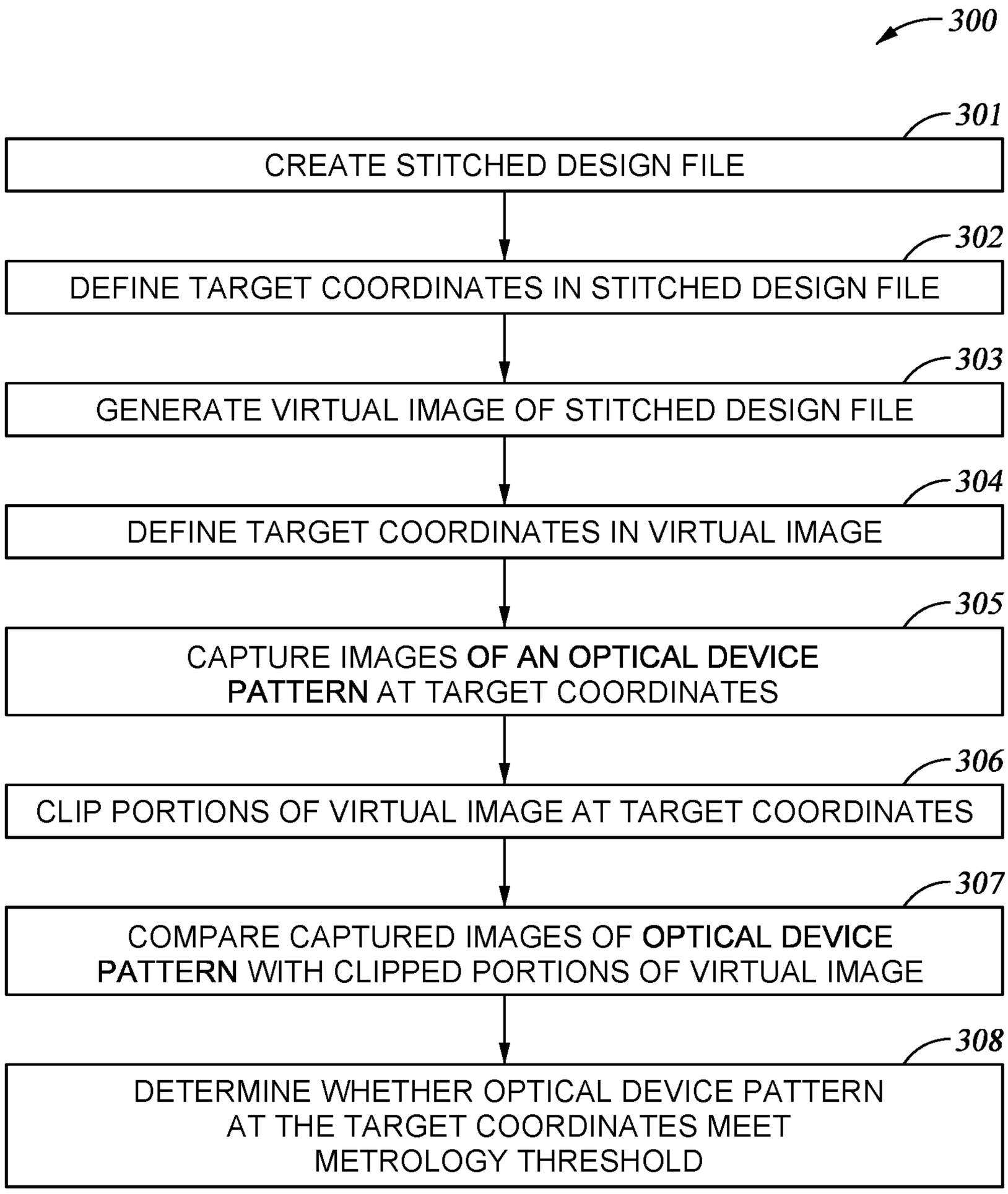
300
301
CREATE STITCHED DESIGN FILE
302
DEFINE TARGET COORDINATES IN STITCHED DESIGN FILE
303
GENERATE VIRTUAL IMAGE OF STITCHED DESIGN FILE
304
DEFINE TARGET COORDINATES IN VIRTUAL IMAGE
305
CAPTURE IMAGES OF AN OPTICAL DEVICE PATTERN AT TARGET COORDINATES
306
CLIP PORTIONS OF VIRTUAL IMAGE AT TARGET COORDINATES
307
COMPARE CAPTURED IMAGES OF OPTICAL DEVICE PATTERN WITH CLIPPED PORTIONS OF VIRTUAL IMAGE
308
DETERMINE WHETHER OPTICAL DEVICE PATTERN AT THE TARGET COORDINATES MEET METROLOGY THRESHOLD

Fig. 3

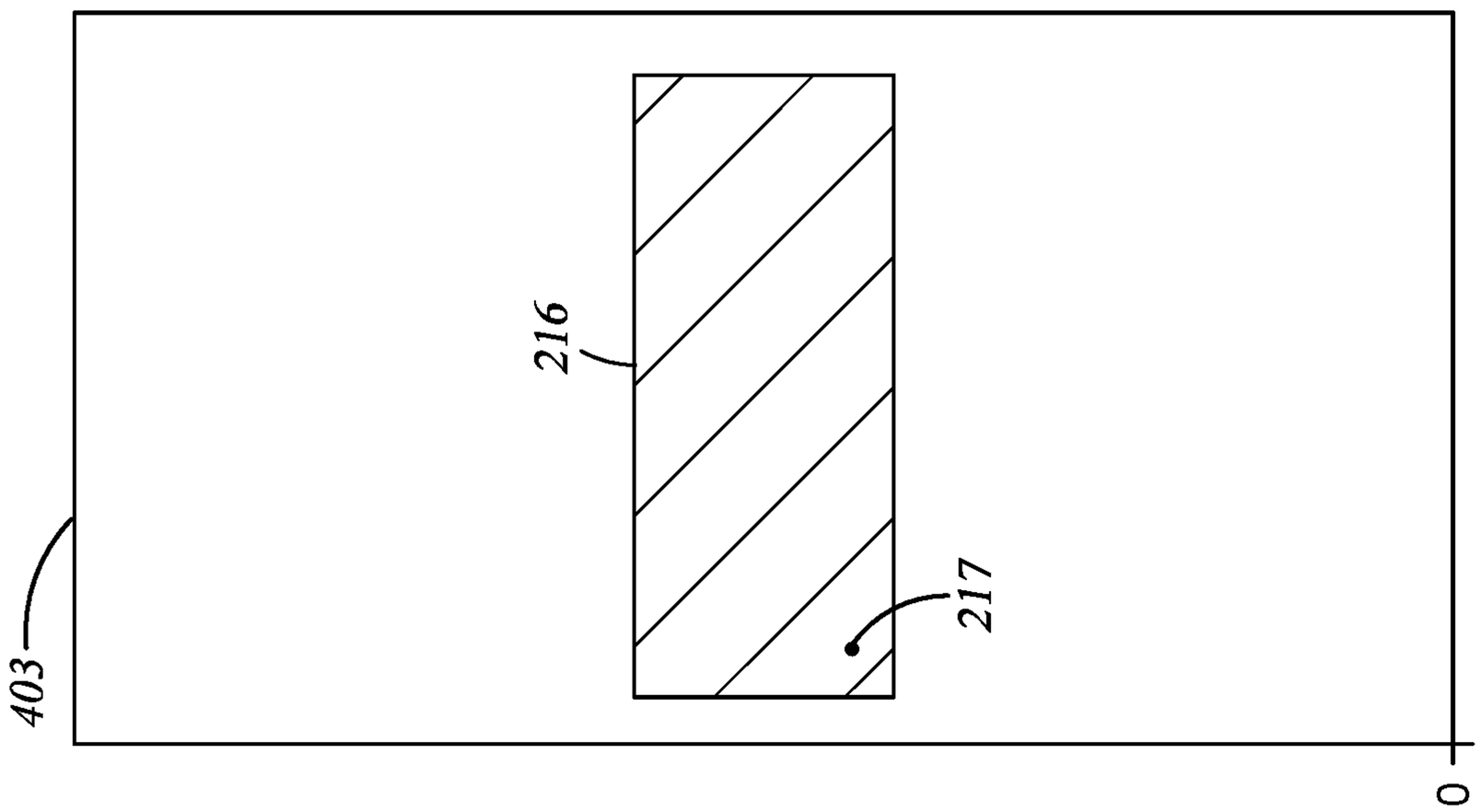

Fig. 4C

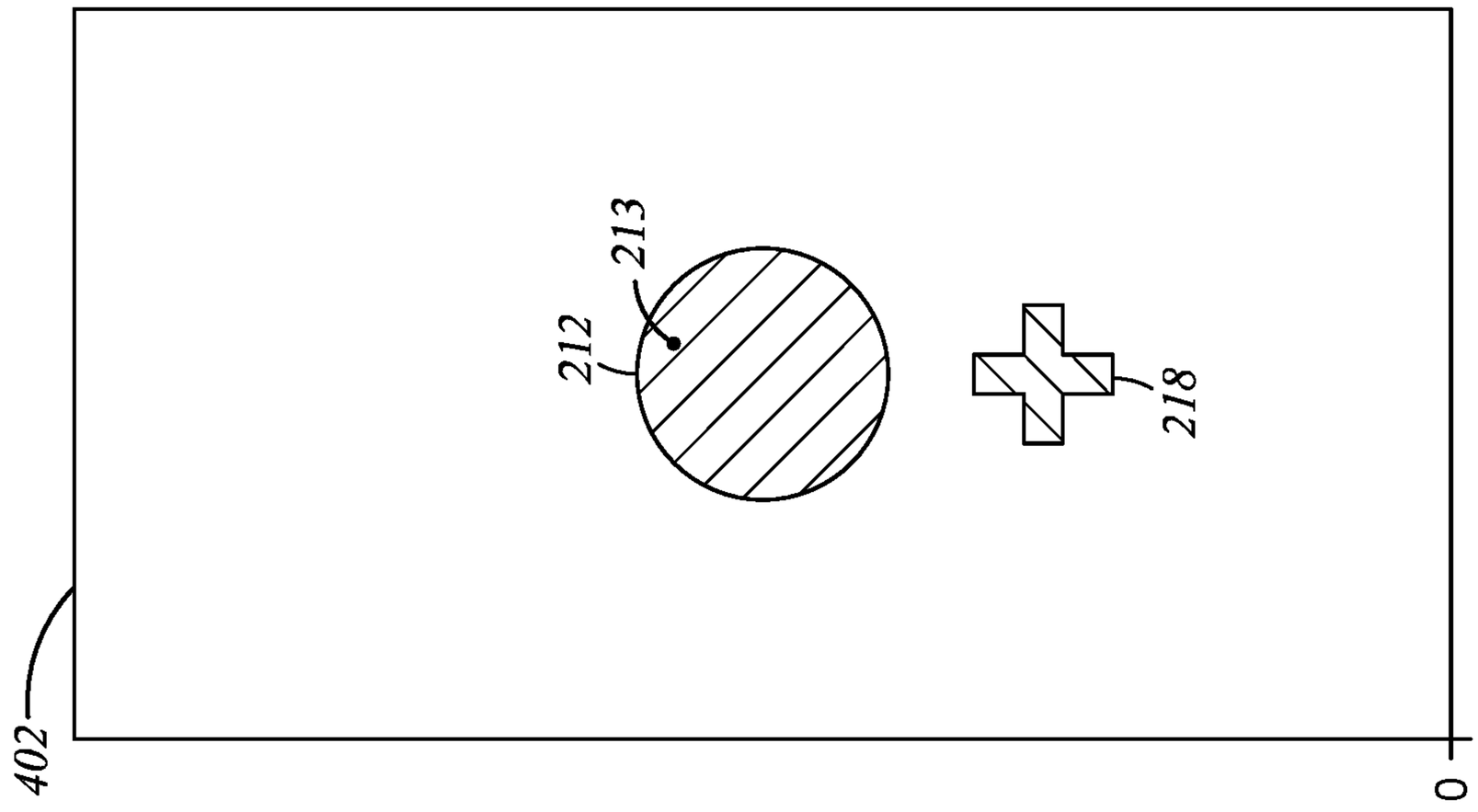

Fig. 4B

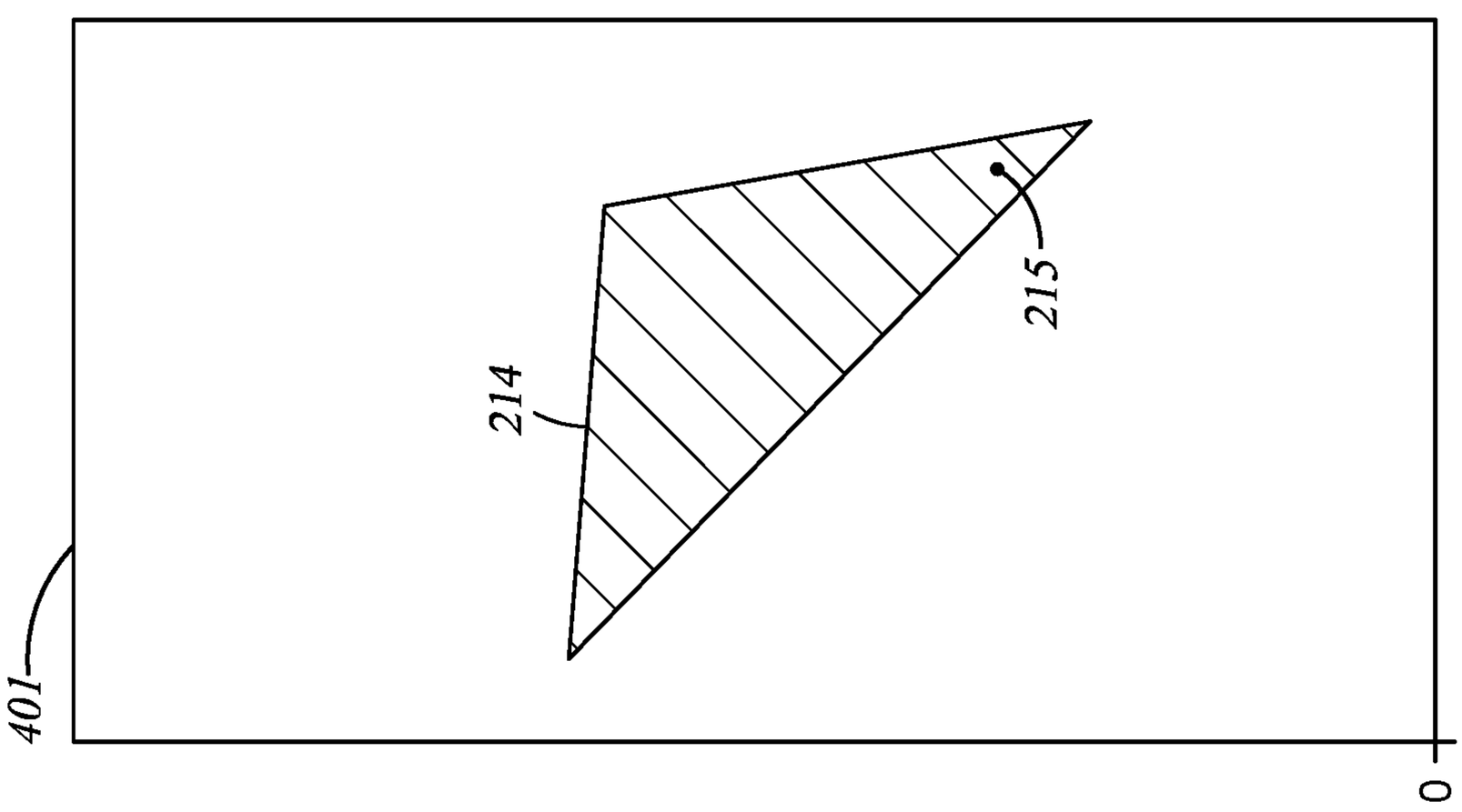

Fig. 4A

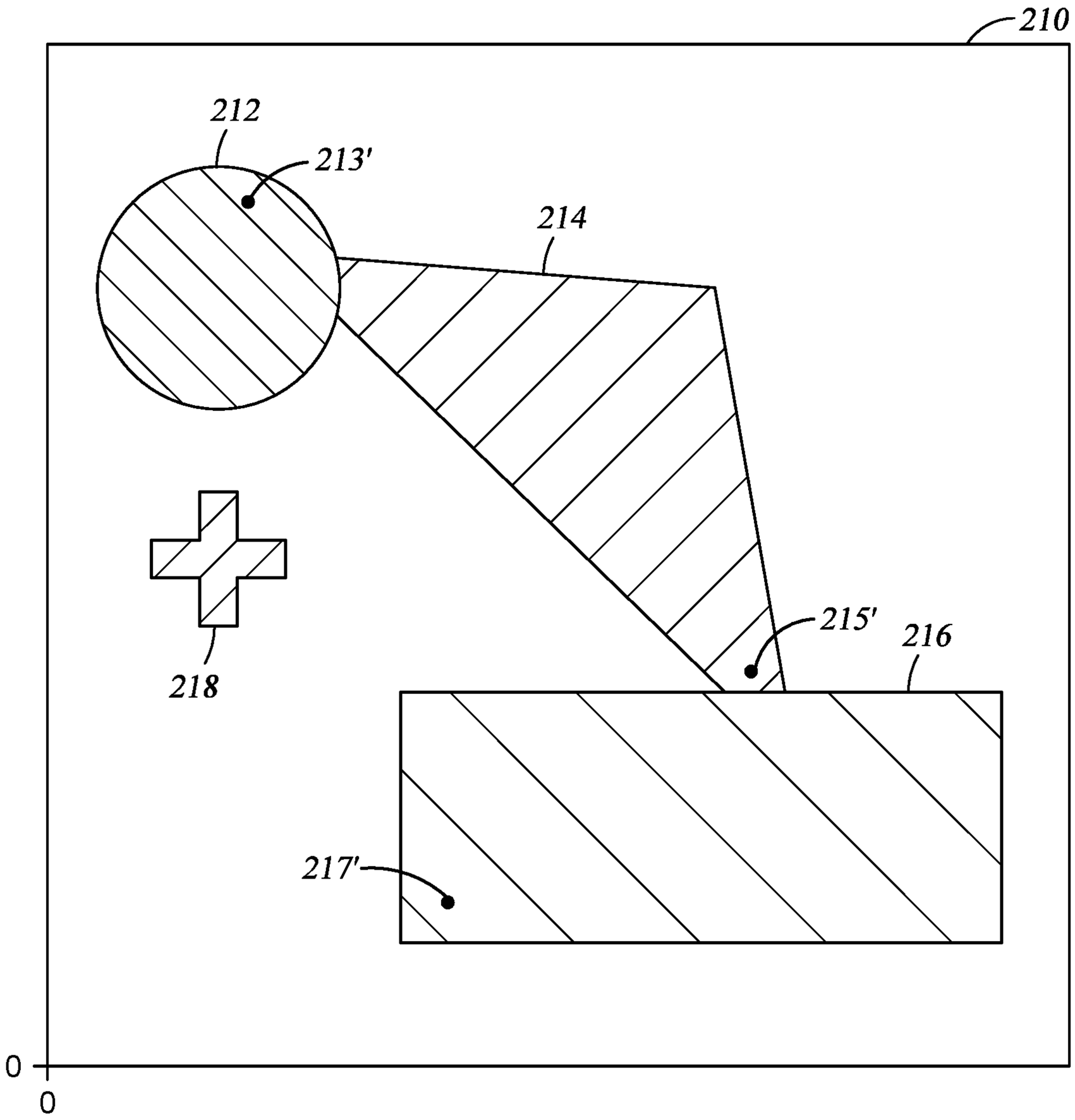

Fig. 5

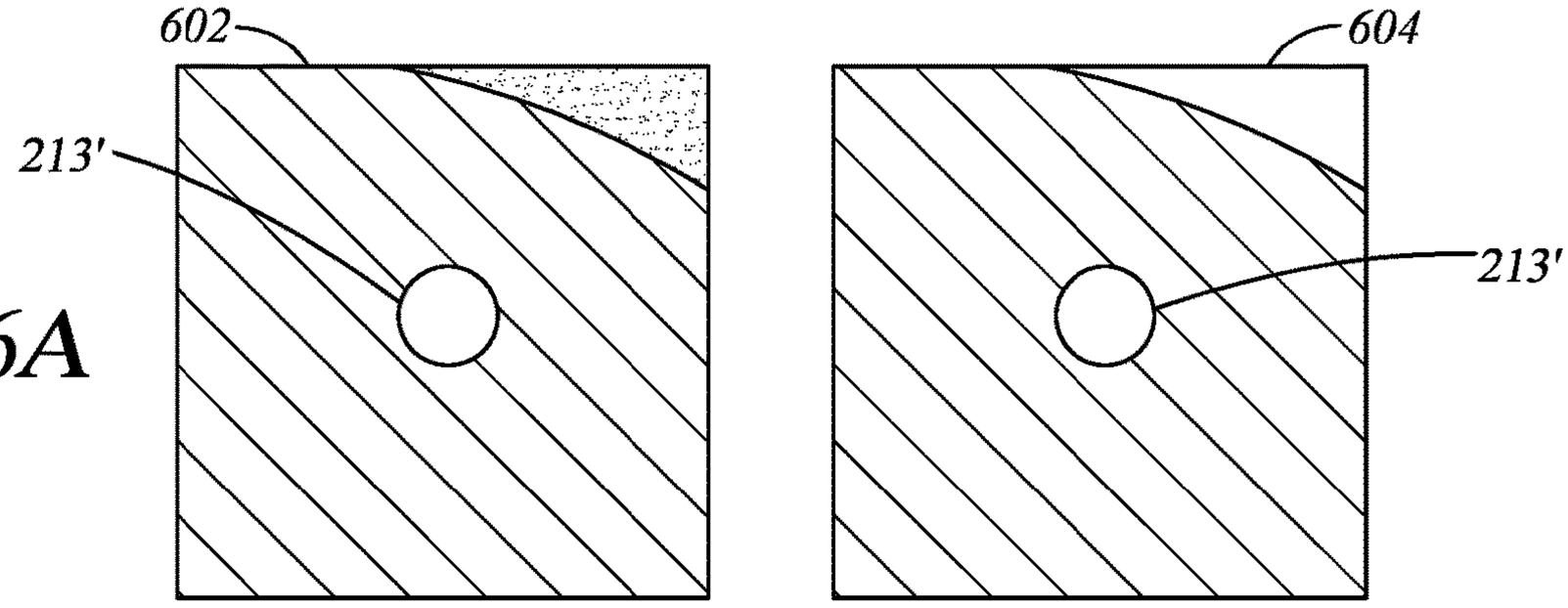

Fig. 6A

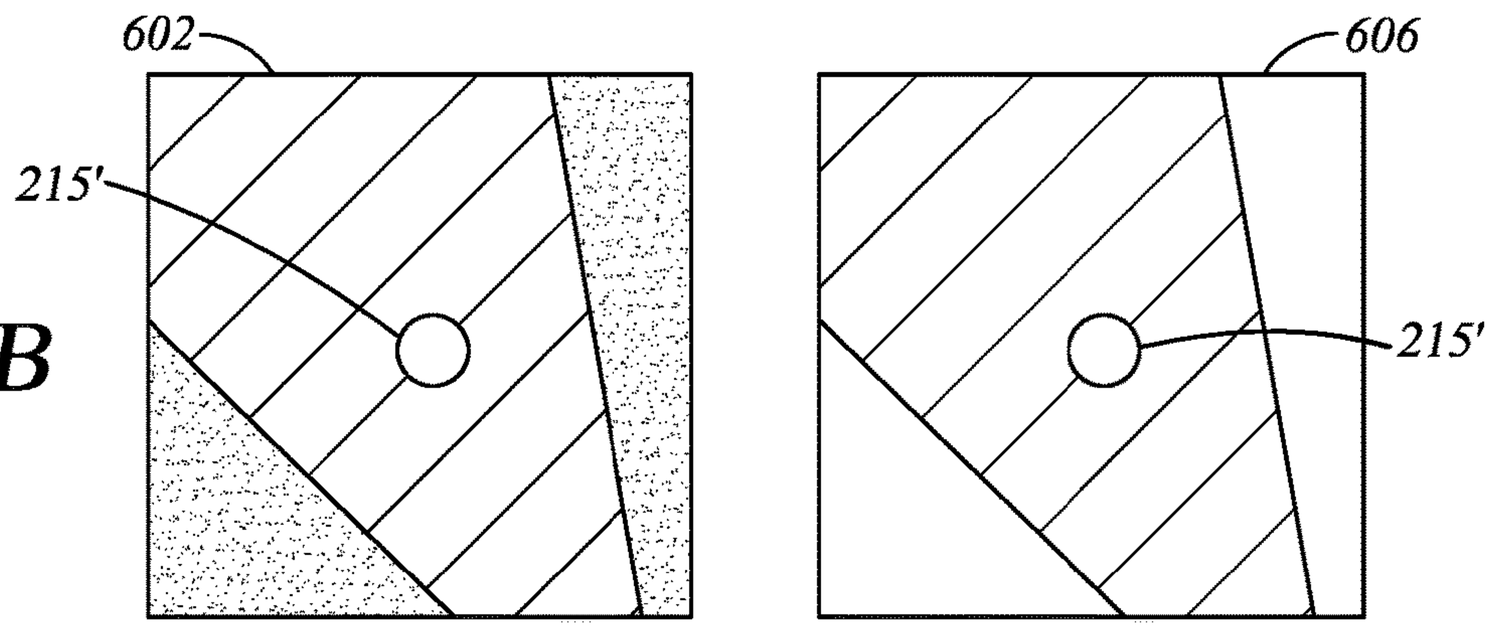

Fig. 6B

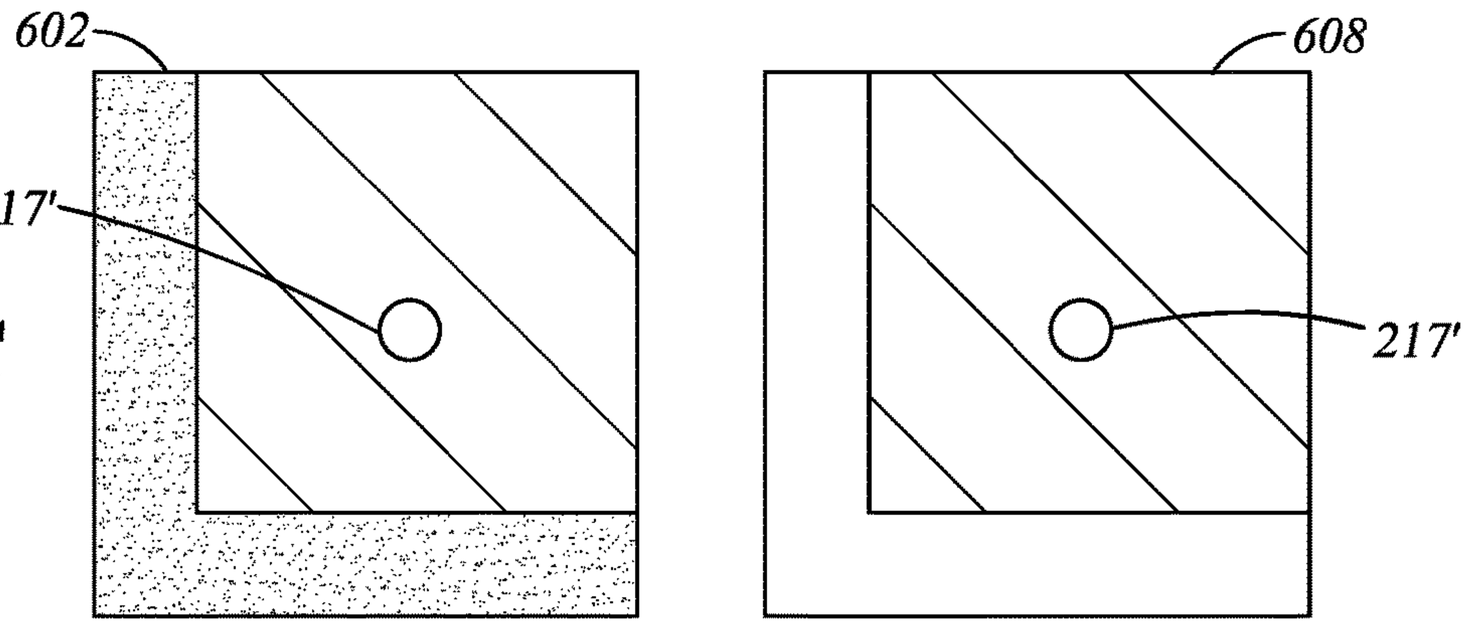

Fig. 6C

AUTOMATED METROLOGY METHOD FOR LARGE DEVICES

RELATED APPLICATIONS

[0001] This application claims benefit of and priority to U.S. Application No. 63/366,110, filed Jun. 9, 2022, the entire contents of which are incorporated herein by reference.

BACKGROUND

[0002] Embodiments of the present disclosure generally relate to optical devices and a method of optical device metrology. More specifically, embodiments described herein relate to a system, a software application, and a method for optical device metrology of optical device patterns formed from lithography stitching.

DESCRIPTION OF THE RELATED ART

[0003] Virtual reality is generally considered to be a computer generated simulated environment in which a user has an apparent physical presence. A virtual reality experience can be generated in 3D and viewed with a head-mounted display (HMD), such as glasses or other wearable display devices that have near-eye display panels as optical devices to display a virtual reality environment that replaces an actual environment.

[0004] Augmented reality, however, enables an experience in which a user can still see through the optical devices of the glasses or other HMD device to view the surrounding environment, yet also see images of virtual objects that are generated for display and appear as part of the environment. Augmented reality can include any type of input, such as audio and haptic inputs, as well as virtual images, graphics, and video that enhances or augments the environment that the user experiences. As an emerging technology, there are many challenges and design constraints with augmented reality.

[0005] Specifically, maintaining color uniformity and a high coupling efficiency of optical devices can be challenging. Color uniformity and coupling efficiency are related to the optical interference between different light paths within the optical device. Accordingly, what is needed in the art are improved methods of modulating the optical interference to enhance the light coupling efficiency to the outcoupler and optimizing the efficiency across the field of view is desired.

[0006] Photolithography is widely used in the manufacturing of semiconductor devices and display devices, such as optical devices. In certain embodiments, these optical devices, may be fabricated from a substrate having a diameter of 200 mm or greater, such as a 200 mm or 300 mm substrate, i.e., a large-scale substrate. The large-scale substrate may then be processed to form multiple optical devices.

[0007] Conventionally, lithography techniques on a large-scale substrate to form an optical device pattern for each of the multiple optical devices requires multiple masks to be stitched together in order to accommodate the large substrate size. A large-scale substrate-sized mask may in turn result in reduced resolution. Stitching of multiple masks is required as the size of the optical device pattern for each optical device is larger than the size of a conventional mask. However, when multiple masks are stitched together, the location at the mask doesn't align with the location on a pattern because the patterns generally comprise single masks. Additionally, when multiple masks are used for lithography via stitching, conventional data based metrology (DBM) may not be obtainable. Further, when there are multiple masks, no automated critical dimension (CD)-SEM recipe is available.

[0008] Accordingly, what is needed in the art is a system, a software application, and a method for optical device metrology of optical device patterns formed from lithography stitching.

SUMMARY

[0009] Embodiments described herein generally relate to a system of optical device metrology. More particularly, the present disclosure described herein provides an optical device metrology system having a stage; a camera; a mask; and a controller. The system further includes the controller being configured to create a stitched design file comprising images of a plurality of masks; define target coordinates for each of the plurality of masks in the stitched design file; define an alignment mark for the stitched design file; capture images of an optical device pattern at each of the target coordinates with the camera, the optical device pattern corresponding to a substrate disposed on the stage and patterned using the mask; compare the captured images of the optical device pattern at each of the target coordinates to virtual images of the stitched design file at each of the target coordinates; and determine whether the optical device pattern at each of the target coordinates meets a threshold value.

[0010] In another embodiment, a method for optical device metrology of optical device patterns is provided. The method includes creating a stitched design file comprising images of a plurality of masks; defining target coordinates for each of the plurality of masks in the stitched design file; defining an alignment mark for the stitched design file; capturing images of an optical device pattern at each of the target coordinates; comparing the captured images of the optical device pattern at each of the target coordinates to virtual images of the stitched design file at each of the target coordinates; and determining whether the optical device pattern at each of the target coordinates meets a threshold value.

[0011] In yet another embodiment, a non-transitory computer readable medium has instructions stored thereon, which, when executed by a processor, causes a computer system to perform operations of the above method.

BRIEF DESCRIPTION OF THE DRAWINGS

[0012] So that the manner in which the above recited features of the present disclosure can be understood in detail, a more particular description of the disclosure, briefly summarized above, may be had by reference to embodiments, some of which are illustrated in the appended drawings. It is to be noted, however, that the appended drawings illustrate only exemplary embodiments and are therefore not to be considered limiting of its scope, and may admit to other equally effective embodiments.

[0013] FIG. **1** is a schematic diagram of a lithography environment according to embodiments described herein.

[0014] FIG. **2**A is a top view of an exemplary large optical device substrate according to embodiments described herein.

[0015] FIG. **2**B is a top view of an exemplary stitched design file according to embodiments described herein.

[0016] FIG. **3** is a flow diagram according to embodiments described herein.

[0017] FIG. **4**A-**4**C shows top views of separate design files according to embodiments described herein.

[0018] FIG. **5** is a top view of an exemplary stitched design file according to embodiments described herein.

[0019] FIGS. **6**A-**6**C are top views of example design file comparisons according to embodiments described herein.

[0020] To facilitate understanding, identical reference numerals have been used, where possible, to designate identical elements that are common to the figures. It is contemplated that elements and features of one embodiment may be beneficially incorporated in other embodiments without further recitation.

DETAILED DESCRIPTION

[0021] Embodiments of the present subject matter generally relate to optical device fabrication. In particular, embodiments described herein relate to methods for optical device metrology of optical device patterns formed from lithography stitching.

[0022] As used herein "large optical device" relates to any optical device which is larger in size in at least one dimension than a photomask used to pattern the optical device in a lithography process. Additionally, in the aspects described below alignment mark shapes and polygons are representative to give an example. The shape of an alignment mark is not limited by the cross shape. The alignment mark may be any shape. Similarly, the shape of the polygons for the design files are not limited by the circle, triangle, and rectangles shown. The polygons may be any shape. The illustrated embodiments, therefore, are merely descriptive in nature and should not be considered limiting.

[0023] FIG. **1** is a schematic diagram of an exemplary lithography environment **100**, according to certain embodiments. As shown, the lithography environment **100** includes, but is not limited to, lithography environment devices including a light source **102**, a camera **104**, a stage **106**, a mask **108**, a controller **110**, and communication links **101**. The controller **110** is operable to facilitate the transfer of a digital pattern file (e.g., data) to the controller **110**. Each of the lithography environment devices is operable to be connected to each other via the communication links **101**. Each of the lithography environment devices is operable to be connected to the controller **110** by the communication links **101**. The lithography environment **100** can be located in the same area or production facility, or the each of the lithography environment devices can be located in different areas.

[0024] Each of the plurality of lithography environment devices are additionally indexed with method **300** operations described herein. In one embodiment, which can be combined with other embodiments described herein, the controller **110** includes a memory **112**, a central processing unit (CPU) **114**, a support circuit **116**, a comparison application **118**, and a virtual mask software **120**. The controller **110** is operable to execute the comparison application **118** and the virtual mask software application **120**. The memory **112** is configured to store instructions corresponding to any portion of the method **300** described below. The communication links **101** may include at least one of wired connections, wireless connections, satellite connections, and the like. The communications links **101** facilitate sending and receiving files to store data, according to embodiments further described herein. Transfer of data along communications links **101** can include temporarily or permanently storing files or data in the cloud, before transferring or copying the files or data.

[0025] As noted above, the controller **110** includes central processing unit (CPU) **114**, support circuits **116** and memory **112**. The CPU **114** can be one of any form of computer processor that can be used in an industrial setting for controlling the lithography environment devices. The memory **112** is coupled to the CPU **114**. The memory **112** can be one or more of readily available memory, such as random access memory (RAM), read only memory (ROM), floppy disk, hard disk, or any other form of digital storage, local or remote. The support circuits **116** are coupled to the CPU **114** for supporting the processor. These circuits include cache, power supplies, clock circuits, input/output circuitry, subsystems, and the like. The controller **110** can include the CPU **114** that is coupled to input/output (I/O) devices found in the support circuits **116** and the memory **112**.

[0026] The controller **110** can include one or more software applications, such as the comparison application **118** and the virtual mask software **120**. The controller **110** can also include media data stored by the memory **112** that is used by the CPU **114** to perform the method **300** described herein. The CPU **114** can be a hardware unit or combination of hardware units capable of executing software applications and processing data. In some configurations, the CPU **114** includes a digital signal processor (DSP), an application-specific integrated circuit (ASIC), and/or a combination of such units. The CPU **114** is configured to execute the one or more software applications, such as the comparison application **118** and the virtual mask software **120**, and process the stored media data, which can be each included within the memory **112**. The controller **110** controls the transfer of data and files to and from the various lithography environment devices. The memory **112** is also configured to store instructions corresponding to any operation of the method **300** according to embodiments described herein.

[0027] The controller **110** may facilitate the control and automation of a digital lithography process based on the digital pattern file provided. The digital pattern file (or computer instructions), which may be referred to as an imaging design file, readable by the controller **110**, determines which tasks are performable on a substrate. The digital pattern file corresponds to an optical device pattern to be written into the photoresist using electromagnetic radiation output.

[0028] The digital pattern file may be provided in different formats. For example, the format of the digital pattern file may be one of a GDS format or an OASIS format, among others. The digital pattern file includes information corresponding to features of exposure patterns to be generated on a substrate. The digital pattern file may include areas of interest which correspond to one or more structural elements. The structural elements may be constructed as geometrical shapes (e.g., polygons).

[0029] A stage **106** is provided to support a substrate. In some embodiments, the stage is operable to move in the X and Y directions for processing. The processing position may be located beneath the light source **102** and/or the camera **104**, for example. A metrology system measures the

X and Y lateral position coordinates of the stage **106** in real-time so that the location of the patterns can be accurately measured.

[0030] The light source **102** is configured to produce a light beam having a predetermined wavelength. In one example a wavelength in the blue range, less than about 450 nm, is produced by the light source **102**. The light source **102** is any suitable light source, such as a light emitting diode (LED) or a laser, capable of producing a light having predetermined wavelength. In some embodiments, the light source **102** may include microLEDs, digital micromirror devices (DMDs) and liquid crystal displays (LCDs). In operation, the light source **102** is used to project the light through the mask **108** to the substrate.

[0031] The camera **104** is configured to capture an image of the substrate once the light source **102** projects light through the mask **108** onto the substrate. The captured image is stored in memory **112** for use by the comparison application **118**. The comparison application **118** is executable to compare a captured image of the substrate to the digital pattern file. The CPU **114** is configured to execute the comparison application **118** software program. In another embodiment, which can be combined with other embodiments described herein, the comparison application **118** may be a remote computer server which includes a controller and a memory (e.g., data store).

[0032] In some embodiments, the camera **104** is fixed over the stage **106** containing the substrate. In other embodiments, the camera **104** may be movable over the surface of the substrate to allow for scanning of the surface. In other embodiments, more than one camera **104** may be used such that the entire field of view of all the cameras may view the entire substrate.

[0033] The digital pattern file is provided to the controller **110**. As will be discussed in more detail below, the digital pattern file comprises a stitched digital pattern file. The controller **110** applies the virtual mask software application **120** to the digital pattern file. The virtual mask software application **120** can be a vMASC software. In one embodiment, which can be combined with other embodiments described herein, the virtual mask software application **120** is a software program stored in the memory **112** of the controller **110**. The CPU **114** is configured to execute the software program. In another embodiment, which can be combined with other embodiments described herein, the virtual mask software application **120** may be a remote computer server which includes a controller and a memory (e.g., data store).

[0034] The digital pattern file is converted into a virtual mask file by the virtual mask software application **120**. The virtual mask file is a digital representation of the design to be printed by the lithography environment device. The virtual mask file is provided to the lithography environment device via the communication links **101**.

[0035] While FIG. **1** depicts an exemplary embodiment of a photolithography system, other systems, environments, and configurations are also contemplated herein. For example, photolithography systems including any suitable number of stages are also contemplated.

[0036] FIG. **2**A is a top view of an exemplary large optical device substrate **220** with a plurality of stitched design files **210** projected thereunto, according to embodiments described herein. The large optical device substrate **220** may be supported by a stage, such as stage **106** of the lithography environment **100** depicted in FIG. **1**. The plurality of stitched design files **210** are projected unto the large optical device substrate **220** in order to accommodate the size of the substrate **220**.

[0037] The substrate **220** comprises any suitable material, for example, glass, which is used as part of an optical device. In some embodiments, the large optical device substrate **220** includes a material selected from silicon (Si), silicon dioxide (SiO_2), germanium (Ge), silicon germanium (SiGe), sapphire, high-index transparent materials such as high-refractive-index glass, or a combination thereof. In other embodiments, which can be combined with other embodiments described herein, the substrate **220** is made of other materials capable of being used as a part of an optical device. The substrate **220** has a film layer to be patterned and formed thereon, such as by pattern etching thereof, and a photoresist layer formed on the film layer to be patterned, which is sensitive to electromagnetic radiation, for example UV or deep UV "light".

[0038] The photoresist layer for patterning the film layer on the substrate **220** may be a positive photoresist or a negative photoresist. A positive photoresist includes portions of the photoresist, when exposed to radiation, are respectively soluble to a photoresist developer applied to the photoresist after the pattern is written into the photoresist using the electromagnetic radiation. A negative photoresist includes portions of the photoresist, when exposed to radiation, will be respectively insoluble to photoresist developer applied to the photoresist after the pattern is written into the photoresist using the electromagnetic radiation. The chemical composition of the photoresist determines whether the photoresist is a positive photoresist or negative photoresist. Examples of photoresists include, but are not limited to, at least one of diazonaphthoquinone, a phenol formaldehyde resin, poly(methyl methacrylate), poly(methyl glutarimide), and SU-8. After exposure of the photoresist to the electromagnetic radiation, the photoresist is developed to leave an exposure of the underlying film layer. Then, using the patterned photoresist, the underlying thin film is pattern etched through the openings in the patterned photoresist to form a portion of the electronic circuitry of the display panel.

[0039] FIG. **2**B is a top view of an exemplary stitched design file **210** according to embodiments described herein. The stitched design file **210** may comprise one or more polygons, including a first polygon **212**, a second polygon **214**, and a third polygon **216**. The one or more polygons correspond to portions of the photoresist layer to be exposed to electromagnetic radiation. Design files for each of the one or more polygons are stitched together to create the stitched design file **210**. The stitched design file **210** also comprises an alignment mark **218**.

[0040] FIG. **3** is a flow diagram of a method for metrology of optical device design patterns formed from lithography stitching, according to embodiments described herein; FIGS. **4**A-**4**C are top views of examples of each of a plurality of masks that may be stitched together to form optical device design patterns, according to embodiments described herein; and FIG. **5** is a top view of an exemplary stitched design file, according to embodiments described herein. FIGS. **3**, **4**A-**4**C, and **5** are herein described together for clarity.

[0041] Method **300** begins at operation **301** with the creating of a stitched design file, for example, the stitched

design file **210** in FIG. **5** comprising images of a plurality of masks stitched together. In one embodiment, the plurality of masks comprises a first mask **401**, a second mask **402**, and a third mask **403**, as shown in FIGS. **4**A-**4**C. In certain embodiments, the plurality of masks may be stitched together by a lithography stitching process. In some embodiments, in order to accommodate a large optical device substrate, such as the large optical device substrate **220** in FIG. **2**A, the plurality of masks stitched together is larger than 26×33 mm in at least one dimension. In some embodiments, the plurality of masks is larger than 26×33 mm in two dimensions.

[0042] As shown in FIGS. **4**A-**4**C, the plurality of masks stitched together to form the stitched design file **210** in FIG. **5** may each include one or more polygons. In the example shown, the first mask **410**, the second **402**, and the third mask **403** include the first polygon **212**, the second polygon **214**, and the third polygon **216**, respectively. In one embodiment, which can be combined with other embodiments herein, one or more targets are defined in each of the plurality of masks prior to the stitching process in operation **301**. The one or more targets correspond to the one or more polygons in each of the masks and are each defined with a corresponding target coordinate. In the example shown, a first target **213** is defined on the first mask **401** for the first polygon **212**, a second target **215** is defined on the second mask **402** for second polygon **214**, and a third target **217** is defined on the third mask **403** for the third polygon **216**. The corresponding target coordinates for targets **213**, **215**, and **217** on each of the plurality of masks may be defined based on a reference point defined on each of the plurality of masks. In the example shown in FIGS. **4**A-**4**C, the reference point for defining the target coordinates is the lower left corner (0,0) in each individual mask of the plurality of masks. The corresponding target coordinates in the first, second, and third masks **401**, **402**, **403** shown may each be defined as (x1, y1) for Target **213**, (x2, y2) for Target **215**, and (x3, y3) for Target **217**.

[0043] In some embodiments, an alignment mark, such as the alignment mark **218** in FIG. **4**B, may also be defined on one or more of each of the plurality of masks stitched together in operation **301**. In some embodiments, the alignment mark **218** may be defined by both SEM alignment and optical alignment. In some embodiments, the alignment mark **218** may comprise a segmented mark or a solid mark. In some embodiments, the alignment mark **218** may be of a cross or any other polygon or shape.

[0044] At operation **302**, a second set of target coordinates corresponding to the targets **213**, **215**, and **217** on each of the plurality of masks is defined in the stitched design file **210**. The second set of target coordinates are defined based on a reference point on the stitched design file **210**.

[0045] As shown in FIG. **5**, in one embodiment, which can be combined with other embodiments herein, the second set of target coordinates in the stitched design file **210** for targets corresponding to the targets **213**, **215**, and **217** on the first, second, and third polygons **212**, **214**, and **216** are defined based on the lower left corner (0,0) reference point of the stitched design file **210**. In the stitched design file **210**, the second set of target coordinates for the targets **213**, **215**, **217** may each be defined as (x1', y1') for Target **213**, (x2', y2') for Target **215**, and (x3', y3') for Target **217**. The second set of target coordinates for the stitched design file **210** may be utilized for CD-SEM measurement to locate the targets **213**, **215**, and **217** on the optical device pattern.

[0046] At operation **303**, a virtual image of the stitched design file **210** is generated by combining the individual GDS files used to fabricate each of the plurality of masks stitched together in the stitched design file **210**. The virtual image is a combination of individual GDS files corresponding to each of the plurality of masks of the stitched design file **210**. The individual GDS files are combined in order to create one GDS file which the resulting virtual image shows the same optical device pattern as the stitched design file **210**.

[0047] In operation **304**, targets **213**, **215**, and **217** defined in the stitched design file **210** in operation **302** and any alignment marks on the stitched design file **210**, such as the alignment mark **218**, are correspondingly also defined in the virtual image generated in operation **303**. The targets in the virtual image may correspondingly be defined as targets **213'**, **215'**, and **217'**. The targets **213'**, **215'**, and **217'** in the virtual image are defined using the same reference point used to define the second set of target coordinates in the stitched design file **210**. In one embodiment, the targets **213'**, **215'**, and **217'** in the virtual image are defined based on the same lower left corner (0,0) reference point of the virtual image as in the stitched design file **210**. Accordingly, the target coordinates defined for the targets **213'**, **215'**, and **217'** in the virtual image may in turn match the second set of target coordinates defined for the stitched design file **210** in operation **302**.

[0048] At operation **305**, the method **300** continues with capturing images of portions of an optical device pattern at each of the target coordinates defined in operation **304** for the virtual image. With reference to the FIG. **1**, the optical device pattern may correspond to the substrate **220** disposed on the stage **106** and patterned with the mask **108**. A GDS clip tool may be used to take images of the optical device pattern at each of the target coordinates, in order to achieve alignment and target automatic pattern recognition and CD-SEM measurement.

[0049] In operation **306**, portions of the virtual image generated in operation **303** are clipped at each of the target coordinates defined in operation **304**.

[0050] At operation **307**, the captured images of the optical device pattern from operation **305** are compared to the clipped portions of the virtual image from operation **306**, as shown in FIGS. **6**A-**6**C.

[0051] Method **300** concludes at operation **308** with determining whether the optical device pattern at each of the target coordinates defined in operation **304** meets a threshold value when compared to the clipped portions of the virtual image at the same target coordinates.

[0052] FIGS. **6**A-C are top views of example design file comparisons between the captured images of the optical device pattern from operation **305** and the clipped portions of a virtual image **602**, such as the clipping of the virtual image from method **300** in operation **306**, according to embodiments described herein. For example, FIG. **6**A corresponds to images of portions of the first polygon **212** from the virtual image **602** and a corresponding captured image **604**; FIG. **6**B corresponds to images of portions of the second polygon **214** from the virtual image **602** and a corresponding captured image **606**, and FIG. **6**C corresponds to images of portions of the third polygon **216** from the virtual image **602** and corresponding captured image

608. A comparison between the captured images of the optical device pattern at each of the targets **213'**, **215'**, **217'** (on the right) and the clipped portions of the virtual image **602** at corresponding targets **213'**, **215'**, and **217'** (on the left) is performed in order to determine whether the optical device pattern at the targets **213'**, **215**, **217'** meet a metrology threshold value.

[0053] In summation, aspects of the methods and apparatus provide significant advantages compared to conventional apparatus and methods. The methods provided allow for device metrology of optical device patterns formed from lithography stitching. This provides a way to accurately perform lithography for large optical devices, while improving conventional resolution and accuracy.

[0054] While the foregoing is directed to embodiments of the present disclosure, other and further embodiments of the disclosure may be devised without departing from the basic scope thereof, and the scope thereof is determined by the claims that follow.

What is claimed is:

1. An optical device metrology system, the system comprising:

a stage;

a camera;

a mask; and

a controller, wherein the controller is configured to:

create a stitched design file comprising images of a plurality of masks;

define target coordinates for each of the plurality of masks in the stitched design file;

define an alignment mark for the stitched design file;

capture images of an optical device pattern at each of the target coordinates with the camera, the optical device pattern corresponding to a substrate disposed on the stage and patterned with the mask;

compare the captured images of the optical device pattern at each of the target coordinates to virtual images of the stitched design file at each of the target coordinates; and

determine whether the optical device pattern at each of the target coordinates meets a threshold value.

2. The system of claim **1**, wherein the plurality of masks when stitched together is larger than 26×33 mm.

3. The system of claim **1**, wherein the stitched design file comprises images of a first mask, a second mask, and a third mask stitched together.

4. The system of claim **3**, wherein:

the image of the first mask comprises a first polygon;

the image of the second mask comprises a second polygon; and

the image of the third mask comprises a third polygon.

5. The system of claim **4**, wherein the first polygon, the second polygon, and the third polygon comprise different shapes.

6. The system of claim **1**, wherein the alignment mark is a segmented mark.

7. The system of claim **1**, wherein the alignment mark is a solid mark.

8. A non-transitory computer-readable medium storing instruction that, when executed by a processor, cause a computer system to perform the operations of:

creating a stitched design file comprising images of a plurality of masks;

defining target coordinates for each of the plurality of masks in the stitched design file;

defining an alignment mark for the stitched design file;

capturing images of an optical device pattern at each of the target coordinates;

comparing the captured images of the optical device pattern at each of the target coordinates to virtual images of the stitched design file at each of the target coordinates; and

determining whether the optical device pattern at each of the target coordinates meets a threshold value.

9. The non-transitory computer-readable medium of claim **8**, wherein the plurality of masks when stitched together is larger than 26×33 mm.

10. The non-transitory computer-readable medium of claim **8**, wherein the stitched design file comprises images of a first mask, a second mask, and a third mask stitched together.

11. The non-transitory computer-readable medium of claim **10**, wherein:

the image of the first mask comprises a first polygon;

the image of the second mask comprises a second polygon; and

the image of the third mask comprises a third polygon.

12. The non-transitory computer-readable medium of claim **11**, wherein the first polygon, the second polygon, and the third polygon comprise different shapes.

13. The non-transitory computer-readable medium of claim **8**, wherein the alignment mark is a segmented mark.

14. The non-transitory computer-readable medium of claim **8**, wherein the alignment mark is a solid mark.

15. A method for optical device metrology of optical device patterns, the method comprising:

creating a stitched design file comprising images of a plurality of masks;

defining target coordinates for each of the plurality of masks in the stitched design file;

defining an alignment mark for the stitched design file;

capturing images of an optical device pattern at each of the target coordinates;

comparing the captured images of the optical device pattern at each of the target coordinates to virtual images of the stitched design file at each of the target coordinates; and

determining whether the optical device pattern at each of the target coordinates meets a threshold value.

16. The method of claim **15**, wherein the plurality of masks when stitched together is larger than 26×33 mm.

17. The method of claim **15**, wherein the stitched design file comprises images of a first mask, a second mask, and a third mask stitched together.

18. The method of claim **17**, wherein:

the image of the first mask comprises a first polygon;

the image of the second mask comprises a second polygon; and

the image of the third mask comprises a third polygon.

19. The method of claim **15**, wherein the alignment mark is a segmented mark.

20. The method of claim **15**, wherein the alignment mark is a solid mark.

* * * * *