US 20240084435A1

(19) **United States**

(12) **Patent Application Publication**

GODET et al.

(10) **Pub. No.: US 2024/0084435 A1**

(43) **Pub. Date: Mar. 14, 2024**

(54) **PVD DIRECTIONAL DEPOSITION FOR ENCAPSULATION**

(71) Applicant: **Applied Materials, Inc.**, Santa Clara, CA (US)

(72) Inventors: **Ludovic GODET**, Sunnyvale, CA (US); **Bencherki MEBARKI**, Santa Clara, CA (US); **Jinxin FU**, Fremont, CA (US)

(21) Appl. No.: **18/511,631**

(22) Filed: **Nov. 16, 2023**

Related U.S. Application Data

(63) Continuation of application No. 16/716,691, filed on Dec. 17, 2019, now Pat. No. 11,851,740.

(60) Provisional application No. 62/780,793, filed on Dec. 17, 2018.

Publication Classification

(51) **Int. Cl.**

C23C 14/04	(2006.01)
C23C 14/22	(2006.01)
C23C 14/34	(2006.01)
G02B 6/132	(2006.01)
G02B 27/01	(2006.01)
G02B 27/10	(2006.01)

(52) **U.S. Cl.**

CPC ***C23C 14/046*** (2013.01); ***C23C 14/042*** (2013.01); ***C23C 14/225*** (2013.01); ***C23C 14/3407*** (2013.01); ***C23C 14/3464*** (2013.01); ***G02B 6/132*** (2013.01); ***G02B 27/0172*** (2013.01); ***G02B 27/1073*** (2013.01); *G02B 2027/0178* (2013.01)

(57) **ABSTRACT**

Embodiments described herein relate to encapsulated nano-structured optical devices and methods of encapsulating gratings of such devices by asymmetric selective physical vapor deposition (PVD). In some embodiments, a method for encapsulating optical device gratings includes a first PVD process and a second PVD process that may be carried out simultaneously or sequentially. The first PVD process may provide a first stream of material at a first angle non-perpendicular to a substrate of the grating. The second PVD process may provide a second stream of material at a second angle non-perpendicular to the substrate of the grating. The combination of the first PVD process and the second PVD process forms an encapsulation layer over the grating and one or more air gaps between adjacent fins of the grating.

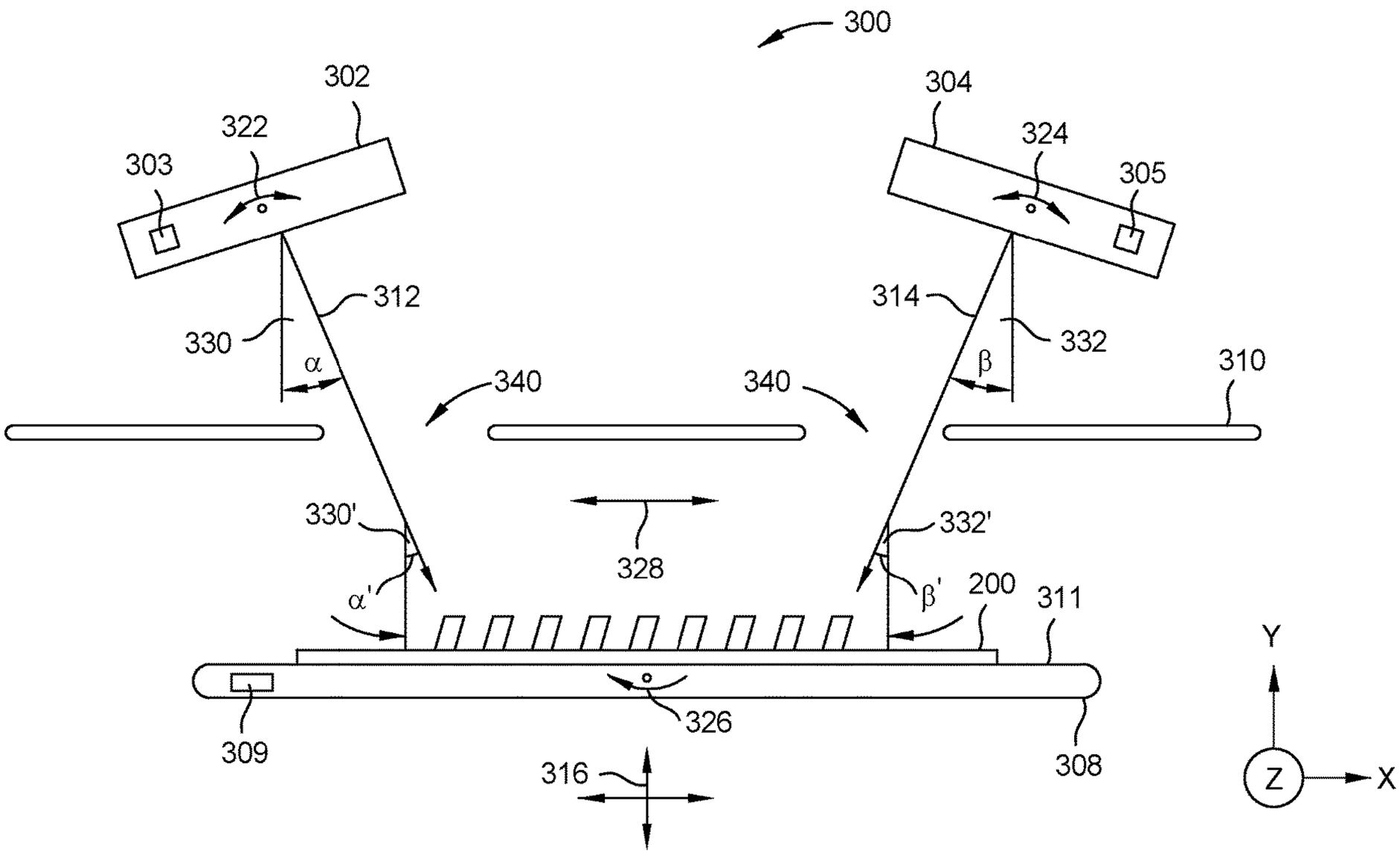

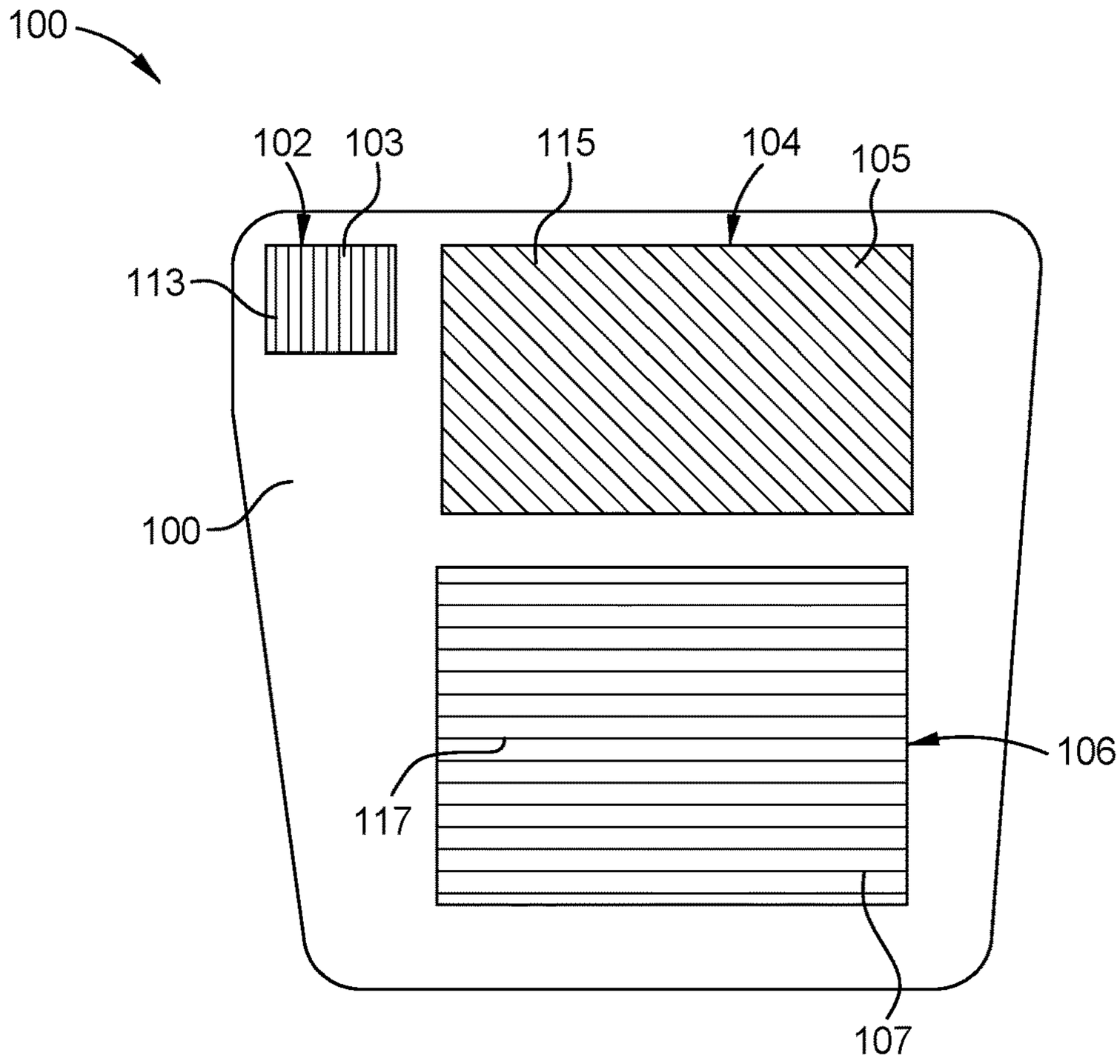
100
102
103
115
104
105
113
100
117
106
107

FIG. 1

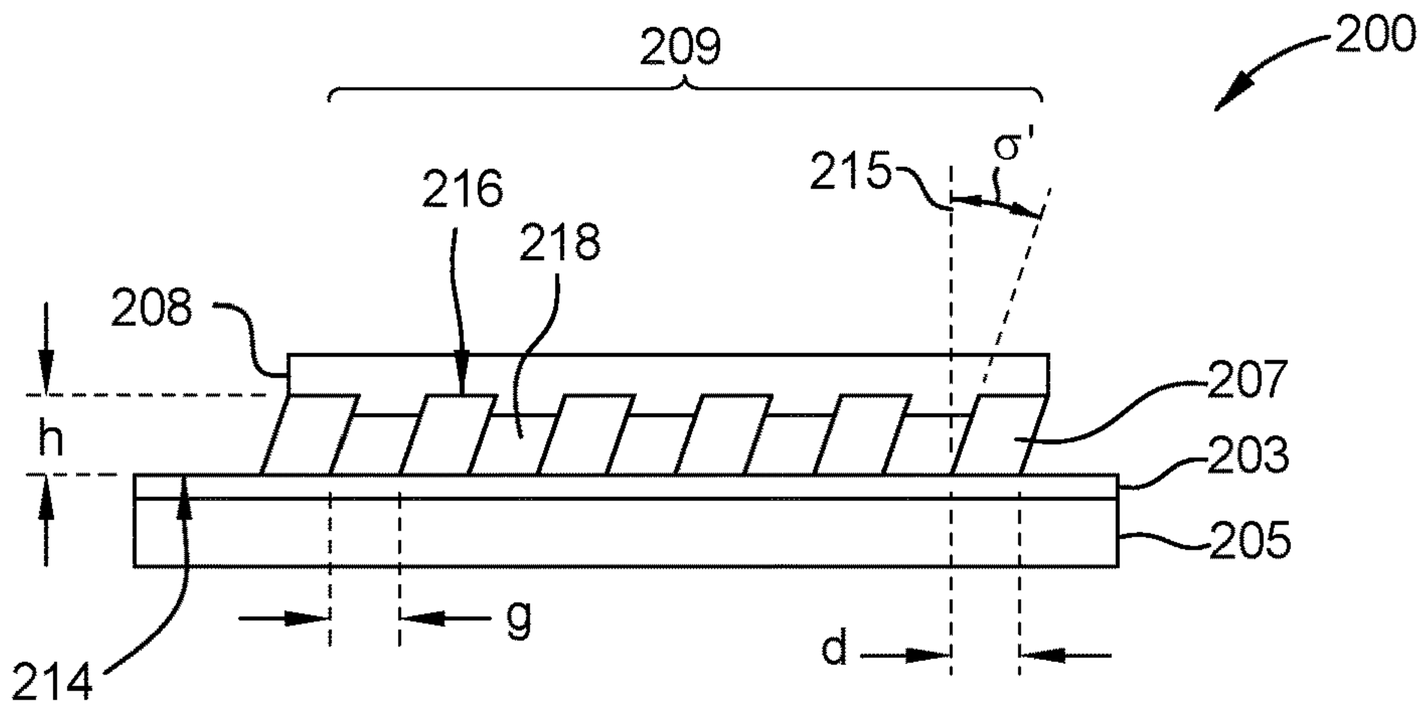
200
209
215
σ'
216
218
208
207
h
203
205
214
g
d

FIG. 2

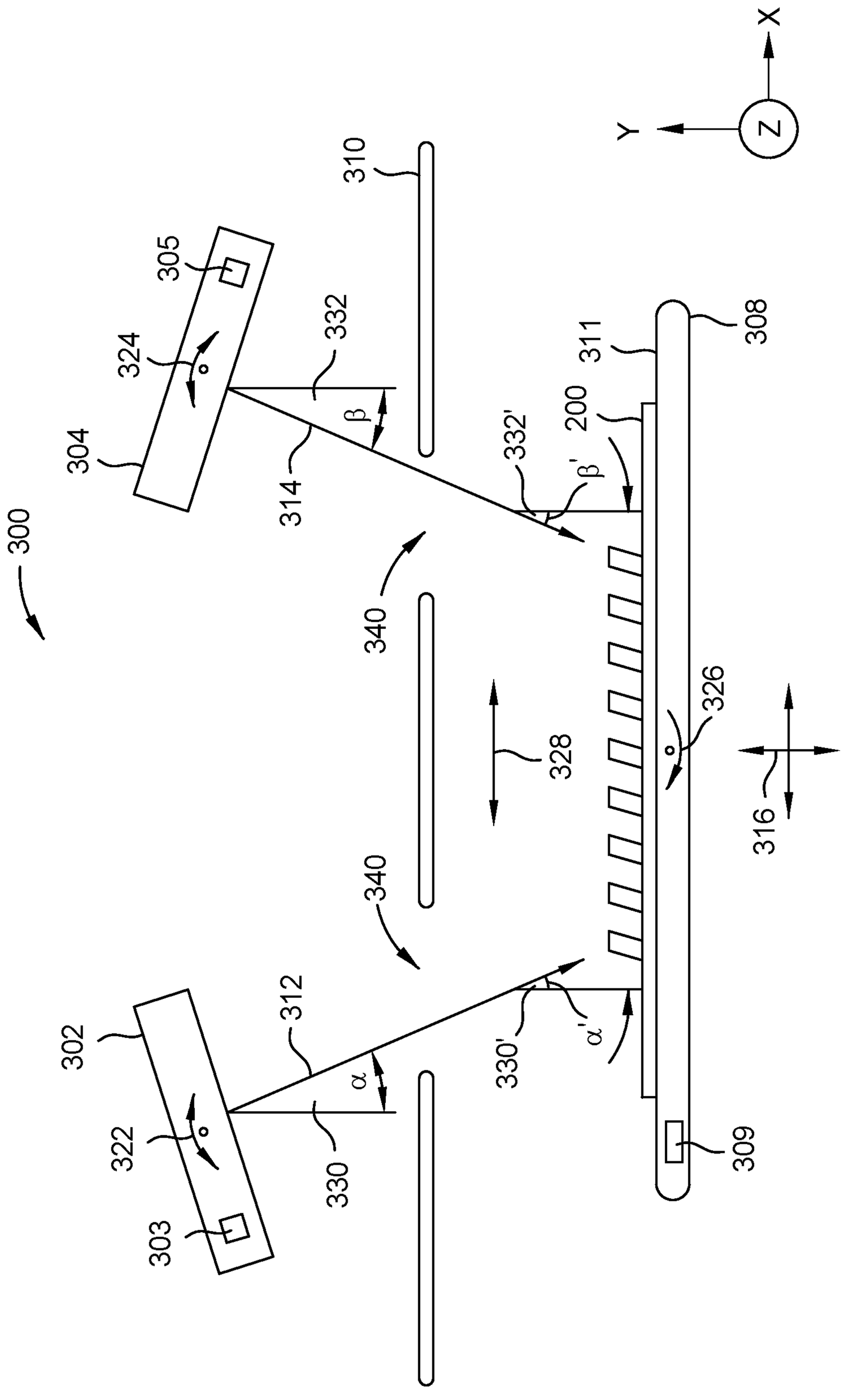
X
Y
Z
310
305
332
324
304
β
314
332'
β'
200
311
308
300
340
328
326
316
340
312
302
α
330
330'
α'
322
303
309

FIG. 3

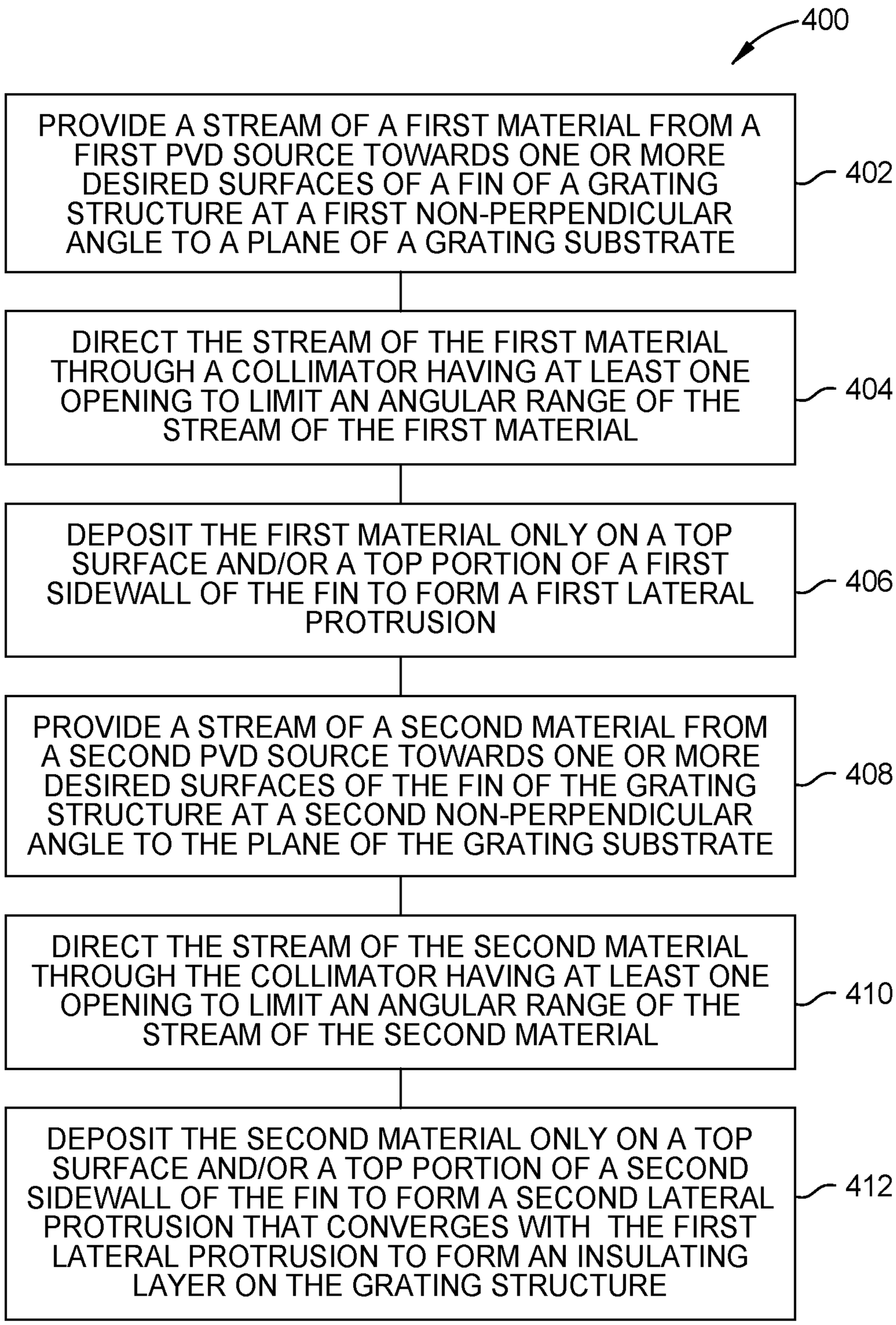
400
PROVIDE A STREAM OF A FIRST MATERIAL FROM A FIRST PVD SOURCE TOWARDS ONE OR MORE DESIRED SURFACES OF A FIN OF A GRATING STRUCTURE AT A FIRST NON-PERPENDICULAR ANGLE TO A PLANE OF A GRATING SUBSTRATE
402
DIRECT THE STREAM OF THE FIRST MATERIAL THROUGH A COLLIMATOR HAVING AT LEAST ONE OPENING TO LIMIT AN ANGULAR RANGE OF THE STREAM OF THE FIRST MATERIAL
404
DEPOSIT THE FIRST MATERIAL ONLY ON A TOP SURFACE AND/OR A TOP PORTION OF A FIRST SIDEWALL OF THE FIN TO FORM A FIRST LATERAL PROTRUSION
406
PROVIDE A STREAM OF A SECOND MATERIAL FROM A SECOND PVD SOURCE TOWARDS ONE OR MORE DESIRED SURFACES OF THE FIN OF THE GRATING STRUCTURE AT A SECOND NON-PERPENDICULAR ANGLE TO THE PLANE OF THE GRATING SUBSTRATE
408
DIRECT THE STREAM OF THE SECOND MATERIAL THROUGH THE COLLIMATOR HAVING AT LEAST ONE OPENING TO LIMIT AN ANGULAR RANGE OF THE STREAM OF THE SECOND MATERIAL
410
DEPOSIT THE SECOND MATERIAL ONLY ON A TOP SURFACE AND/OR A TOP PORTION OF A SECOND SIDEWALL OF THE FIN TO FORM A SECOND LATERAL PROTRUSION THAT CONVERGES WITH THE FIRST LATERAL PROTRUSION TO FORM AN INSULATING LAYER ON THE GRATING STRUCTURE
412

FIG. 4

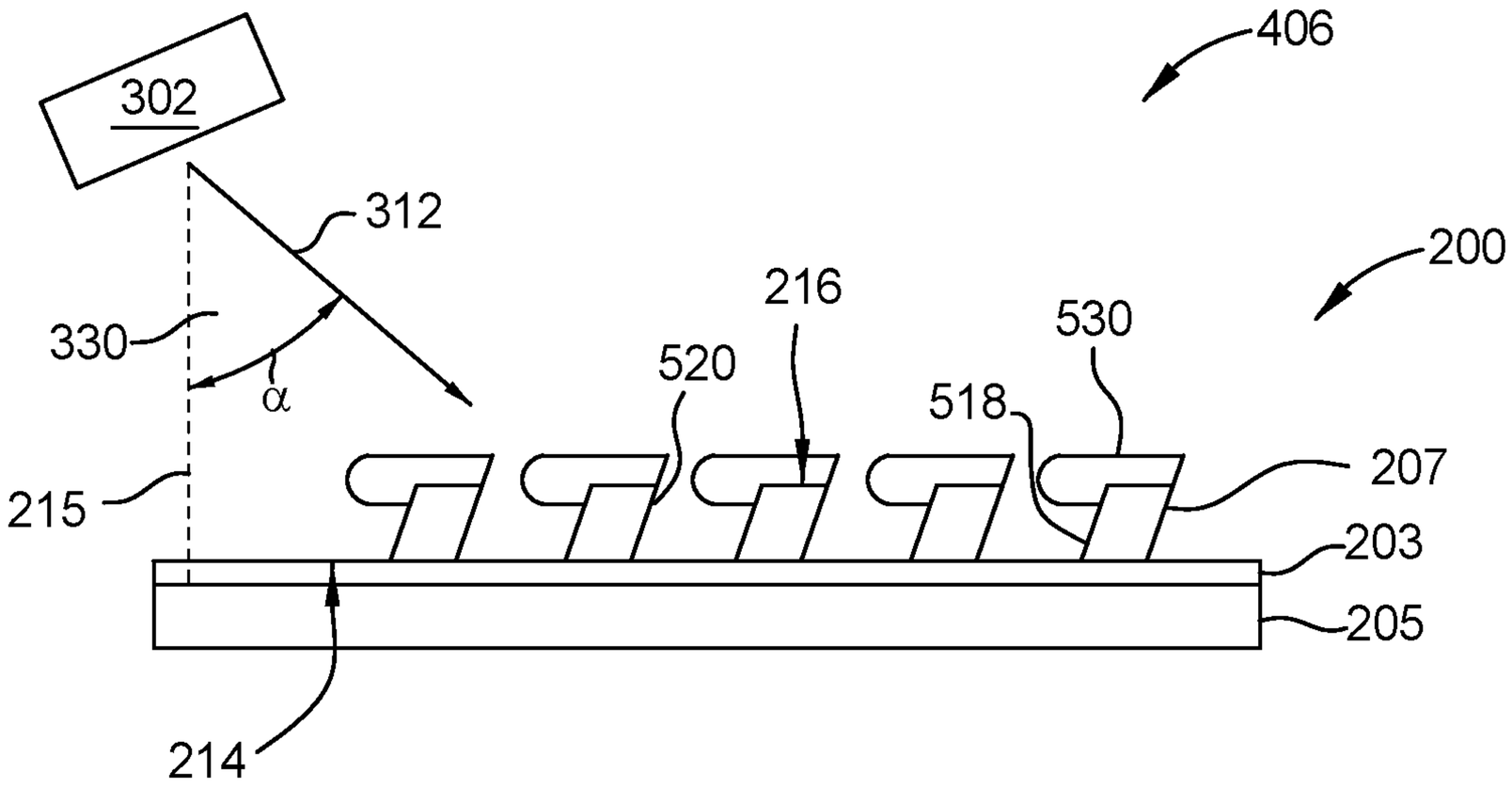
406
302
312
200
216
530
330
α
520
518
207
215
203
205
214

FIG. 5A

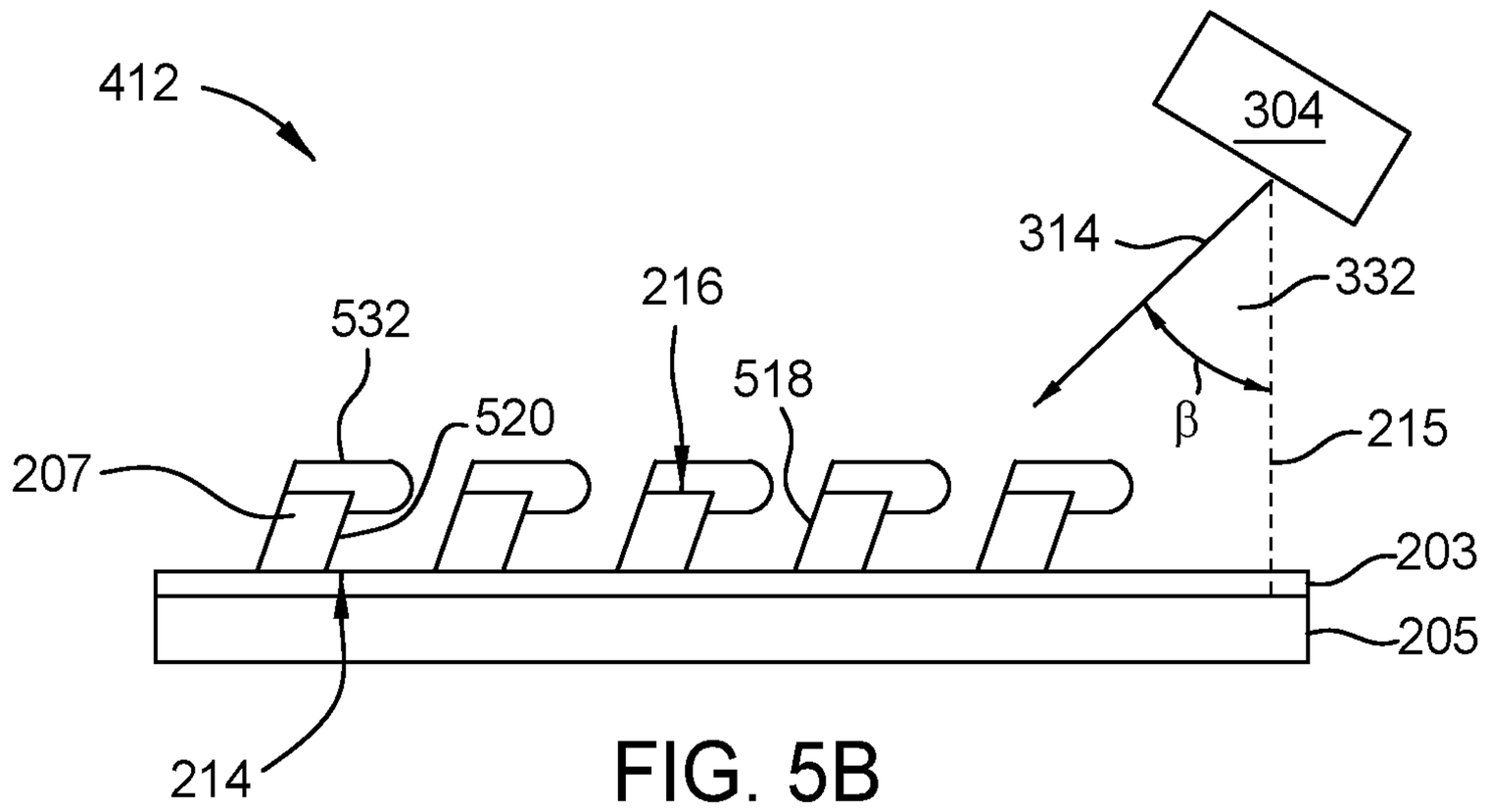
412
304
314
216
332
532
518
520
β
207
215
203
205
214

FIG. 5B

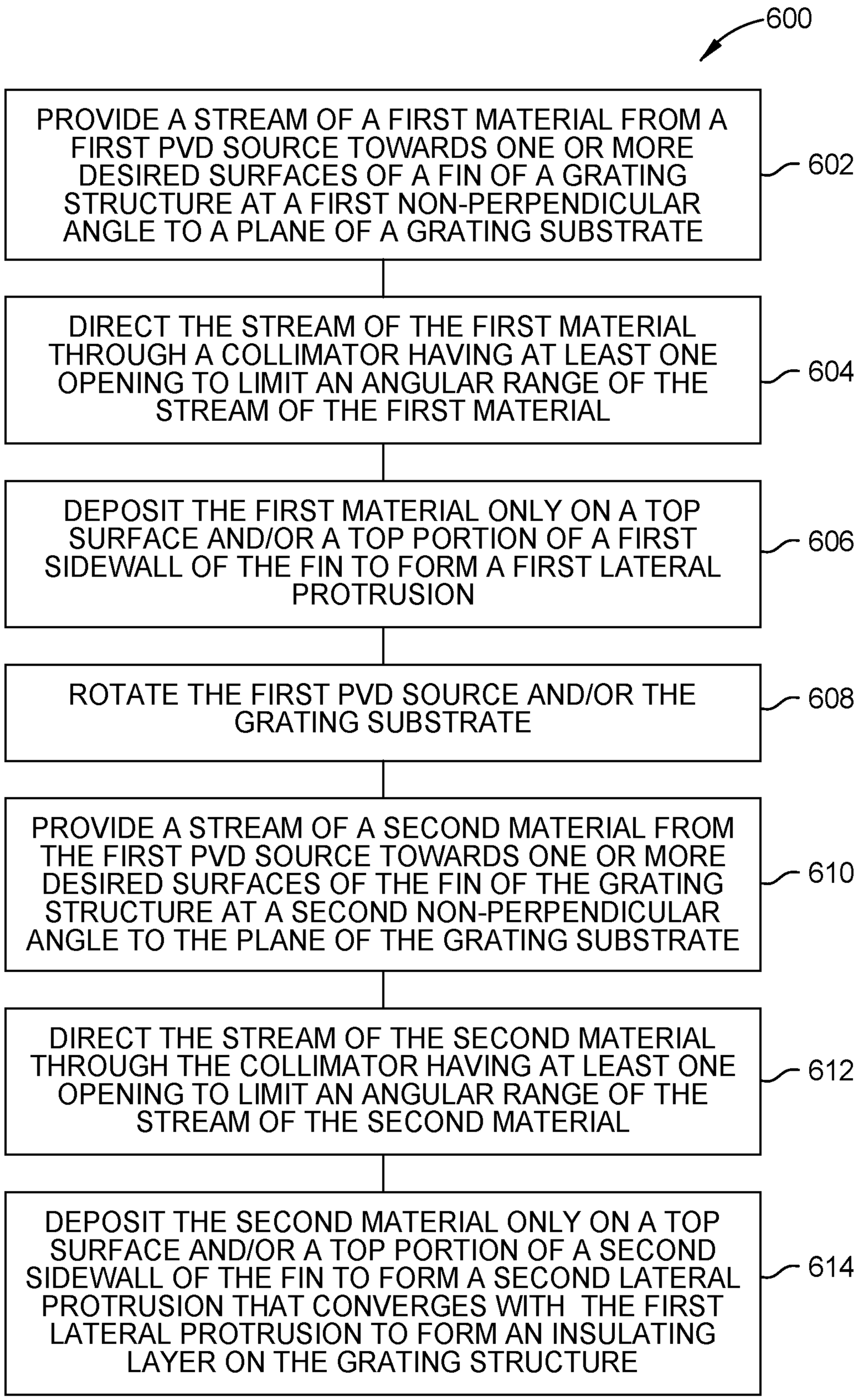
600
PROVIDE A STREAM OF A FIRST MATERIAL FROM A FIRST PVD SOURCE TOWARDS ONE OR MORE DESIRED SURFACES OF A FIN OF A GRATING STRUCTURE AT A FIRST NON-PERPENDICULAR ANGLE TO A PLANE OF A GRATING SUBSTRATE
602
DIRECT THE STREAM OF THE FIRST MATERIAL THROUGH A COLLIMATOR HAVING AT LEAST ONE OPENING TO LIMIT AN ANGULAR RANGE OF THE STREAM OF THE FIRST MATERIAL
604
DEPOSIT THE FIRST MATERIAL ONLY ON A TOP SURFACE AND/OR A TOP PORTION OF A FIRST SIDEWALL OF THE FIN TO FORM A FIRST LATERAL PROTRUSION
606
ROTATE THE FIRST PVD SOURCE AND/OR THE GRATING SUBSTRATE
608
PROVIDE A STREAM OF A SECOND MATERIAL FROM THE FIRST PVD SOURCE TOWARDS ONE OR MORE DESIRED SURFACES OF THE FIN OF THE GRATING STRUCTURE AT A SECOND NON-PERPENDICULAR ANGLE TO THE PLANE OF THE GRATING SUBSTRATE
610
DIRECT THE STREAM OF THE SECOND MATERIAL THROUGH THE COLLIMATOR HAVING AT LEAST ONE OPENING TO LIMIT AN ANGULAR RANGE OF THE STREAM OF THE SECOND MATERIAL
612
DEPOSIT THE SECOND MATERIAL ONLY ON A TOP SURFACE AND/OR A TOP PORTION OF A SECOND SIDEWALL OF THE FIN TO FORM A SECOND LATERAL PROTRUSION THAT CONVERGES WITH THE FIRST LATERAL PROTRUSION TO FORM AN INSULATING LAYER ON THE GRATING STRUCTURE
614

FIG. 6

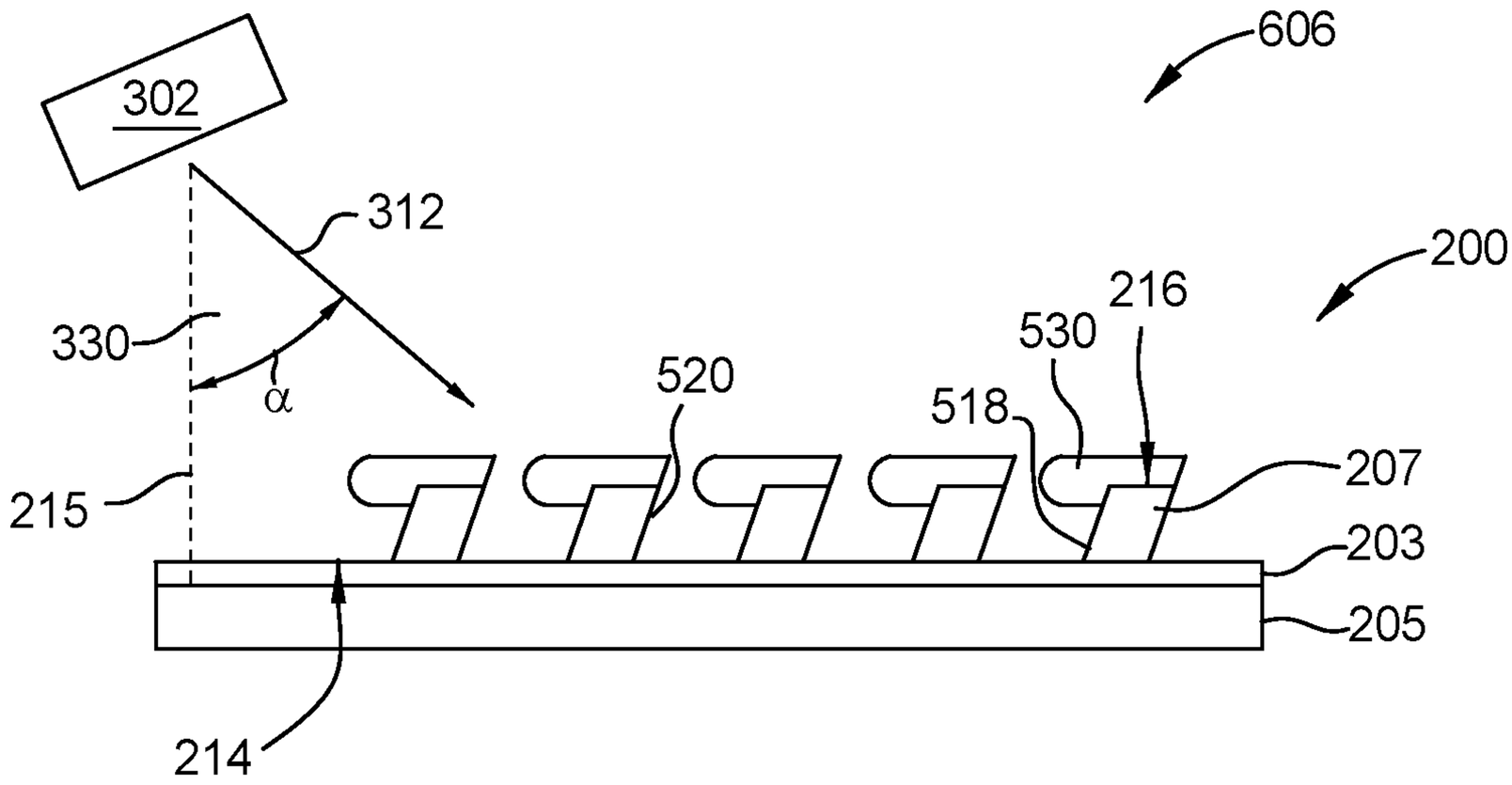
606
302
312
200
330
α
216
530
520
518
207
215
203
205
214

FIG. 7A

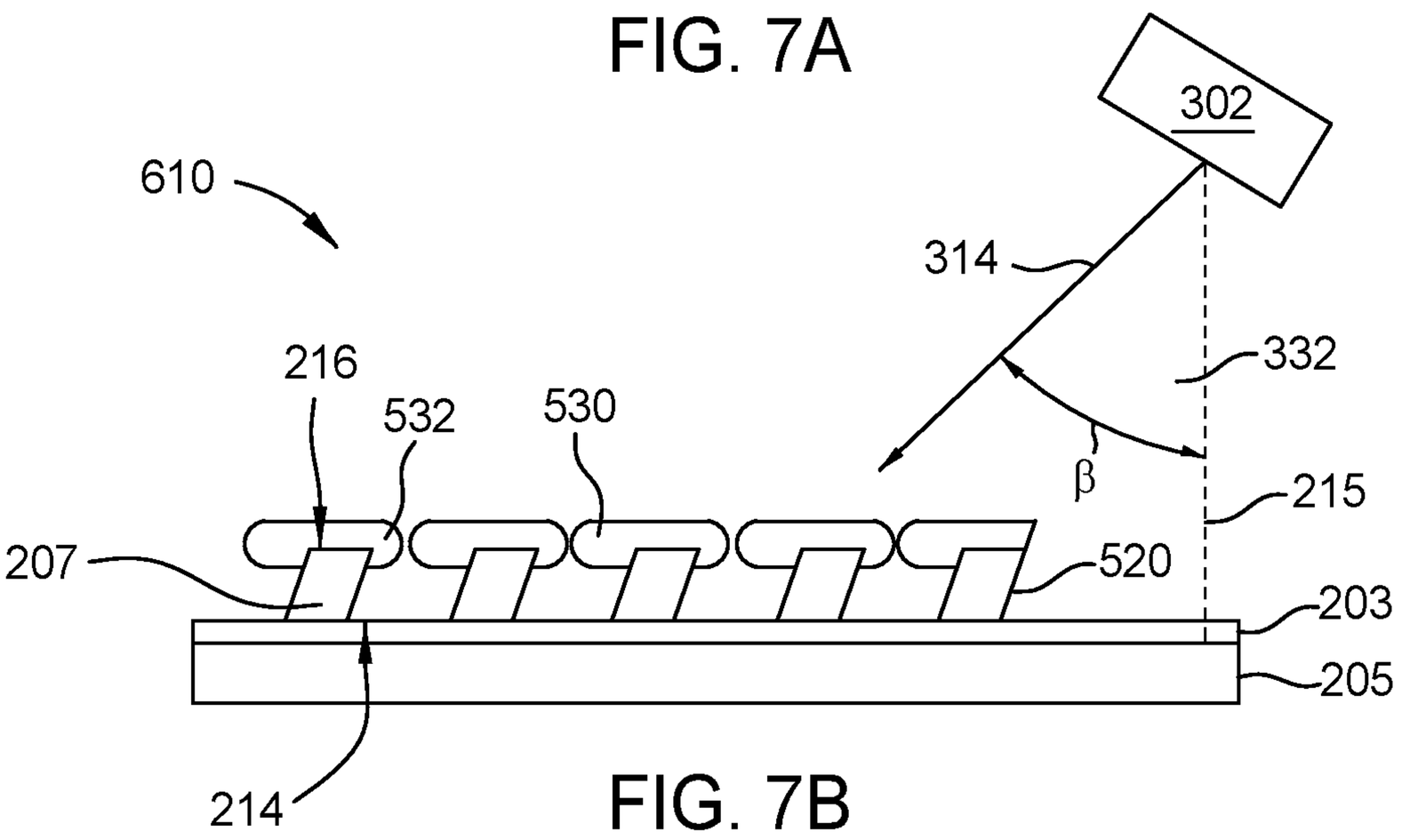
610
302
314
216
532
530
332
β
215
207
520
203
205
214

FIG. 7B

PVD DIRECTIONAL DEPOSITION FOR ENCAPSULATION

CROSS-REFERENCE TO RELATED APPLICATIONS

[0001] This application is a Continuation of co-pending U.S. patent application Ser. No. 16/716,691, filed Dec. 17, 2019 which claims benefit of U.S. Provisional Patent Application Ser. No. 62/780,793, filed Dec. 17, 2018, which are herein incorporated by reference in their entireties.

BACKGROUND

Field

[0002] Embodiments of the present disclosure generally relate to optical devices. More specifically, embodiments of the present disclosure relate to a method of encapsulating gratings of nanostructured optical devices.

Description of the Related Art

[0003] Virtual reality is generally considered to be a computer-generated simulated environment in which a user has an apparent physical presence. A virtual reality experience can be generated in 3D and viewed with a head-mounted display (HMD), such as glasses or other wearable display devices that have near-eye display panels as lenses to display a virtual reality environment that replaces an actual environment.

[0004] Augmented reality, however, enables an experience in which a user can still see through the display lenses of the glasses or other HMD device to view the surrounding environment, yet also see images of virtual objects that are generated for display and appear as part of the environment. Augmented reality can include any type of input, such as audio and haptic inputs, as well as visual images, graphics, and video that enhances or augments the real environment that the user experiences. As an emerging technology, there are many challenges and design constraints with augmented reality.

[0005] One such challenge is displaying a virtual image overlaid on an ambient environment. Waveguides are used to assist in overlaying images. Generated light is propagated through a waveguide until the light exits the waveguide and is overlaid on the ambient environment. Fabricating waveguides can be challenging as waveguides tend to have non-uniform properties. Accordingly, what is needed in the art is an improved method of encapsulating gratings of waveguides.

SUMMARY

[0006] In one embodiment, a method of encapsulating gratings of optical devices by asymmetric selective physical vapor deposition (PVD) is shown and described herein. The method includes providing a first stream of a first material from a first PVD source in a first direction towards one or more surfaces of a first fin structure on a substrate at a first non-perpendicular angle relative to a substrate surface, depositing the first material on the one or more surfaces of the first fin structure to form a first protrusion extending laterally from the first fin structure, providing a second stream of a second material from a second PVD source in a second direction towards one or more surfaces of a second fin structure on the substrate at a second non-perpendicular angle relative to the substrate surface, and depositing the second material on the one or more surfaces of the second fin structure to form a second protrusion extending laterally from the second fin structure. The second protrusion converges with the first protrusion to form an encapsulation layer over the first and second fin structures.

[0007] In one embodiment, a method of encapsulating gratings of optical devices by asymmetric selective physical vapor deposition (PVD) is shown and described herein. The method includes providing a first stream of a first material from a first PVD source in a first direction towards one or more surfaces of a grating disposed on a substrate at a first non-perpendicular angle relative to a plane of an upper surface of the substrate, depositing the first material on the one or more surfaces of the grating, providing a second stream of a second material from a second PVD source in a second direction towards the one or more surfaces of the grating at a second non-perpendicular angle relative to the plane of the upper surface of the substrate, and depositing the second material on the one or more surfaces of the grating. The deposition of the first material and the second material on the one or more surfaces of the grating forms an encapsulation layer over the grating, the encapsulation layer partially defining one or more air gaps between adjacent fins of the grating.

[0008] In one embodiment, a method of encapsulating gratings of optical devices by asymmetric selective physical vapor deposition (PVD) is shown and described herein. The method includes providing a first stream of a first material from a first PVD source in a first direction towards one or more surfaces of a first fin structure on a substrate and at a first non-perpendicular angle relative to the substrate surface, directing the first stream of the first material through a collimator having at least one opening to limit an angular range of the first material passing through the at least one opening, depositing the first material on the one or more surfaces of the first fin structure to form a first protrusion extending laterally from a top portion of the first fin structure, providing a second stream of a second material from a second PVD source in a second direction towards one or more surfaces of a second fin structure on the substrate and at a second non-perpendicular angle relative to the substrate surface; directing the second stream of the second material through the collimator having the at least one opening

BRIEF DESCRIPTION OF THE DRAWINGS

[0009] So that the manner in which the above-recited features of the present disclosure can be understood in detail, a more particular description of the disclosure, briefly summarized above, may be had by reference to embodiments, some of which are illustrated in the appended drawings. It is to be noted, however, that the appended drawings illustrate only exemplary embodiments and are therefore not to be considered limiting of its scope, and may admit to other equally effective embodiments.

[0010] FIG. **1** is a schematic, frontal view of a waveguide combiner according to an embodiment described herein.

[0011] FIG. **2** is a schematic, cross-sectional view of a region of a waveguide combiner having encapsulated gratings according to an embodiment described herein.

[0012] FIG. **3** is a schematic diagram of an apparatus used for PVD deposition according to an embodiment described herein.

[0013] FIG. **4** is a flow diagram of a method of forming an encapsulation layer over a grating of a waveguide according to an embodiment described herein.

[0014] FIGS. **5**A and **5**B are schematic illustrations of a method of forming an encapsulation layer over a grating of a waveguide according to an embodiment described herein.

[0015] FIG. **6** is a flow diagram of a method of forming an encapsulation layer over a grating of a waveguide according to an embodiment described herein.

[0016] FIGS. **7**A and **7**B are schematic illustrations of a method of forming an encapsulation layer over a grating of a waveguide according to an embodiment described herein.

[0017] To facilitate understanding, identical reference numerals have been used, where possible, to designate identical elements that are common to the figures. It is contemplated that elements and features of one embodiment may be beneficially incorporated in other embodiments without further recitation.

DETAILED DESCRIPTION

[0018] Embodiments of the present disclosure relate to angled PVD apparatus and methods. More specifically, embodiments described herein provide a method of depositing an encapsulation layer on a grating.

[0019] Embodiments described herein relate to encapsulated nanostructured optical devices and methods of encapsulating gratings of such devices by asymmetric selective physical vapor deposition (PVD). Examples of nanostructured optical devices include waveguides and metalenses. In some embodiments, a method for encapsulating optical device gratings includes a first PVD process and a second PVD process that may be carried out simultaneously or sequentially. The first PVD process may provide a first stream of material at a first angle non-perpendicular to a substrate of the grating. The second PVD process may provide a second stream of material at a second angle non-perpendicular to the substrate of the grating. The combination of the first PVD process and the second PVD process forms an encapsulation layer over the grating and one or more air gaps between adjacent fins of the grating.

[0020] FIG. **1** illustrates a perspective, frontal view of an exemplary waveguide combiner **100** (e.g. for VR or AR applications) having three gratings **103**, **105**, and **107**. It is to be understood that the waveguide combiner **100** described below is an exemplary waveguide combiner that may be formed utilizing the systems and methods described herein, and that the systems and methods of the present disclosure may be utilized to form or modify other optical devices and nanostructured optical devices, such as other waveguide combiners. For example, an optical device having more than three gratings may be formed, such as five or more gratings. Alternatively, an optical device having less than three gratings may be formed, such as two pluralities of gratings. In another example, an optical device having gratings on both major planar sides may be formed. In yet another example, an optical device having more than one input coupling region and more than one output coupling region may be formed.

[0021] The waveguide combiner **100** includes an input coupling region **102** defined by the first grating **103**, an intermediate region **104** defined by the second grating **105**, and an output coupling region **106** defined by the third grating **107**. Each grating **103**, **105**, and **107** includes a plurality of fins **113**, **115**, **117**, respectively. In some embodiments, one or more of the pluralities of fins **113**, **115**, and **117** include fins having different geometries, such as different slant angles or dimensions from that of other fins in that grating. Additionally, a slant angle of one discreet fin within the plurality of fins **113**, **115**, or **117** may be different across a length or width of the grating thereof. In some embodiments, the input coupling region **102**, intermediate region **104**, and output coupling region **106** are arranged so as to achieve substantially total internal reflection of light between the input coupling region **102** and the output coupling region **106**.

[0022] FIG. **2** illustrates a schematic, cross-sectional view of an exemplary grating **200** according to embodiments described herein. The grating **200** may be substantially similar to one of the gratings **103**, **105**, or **107** and thus, may be utilized in one of the input coupling region **102**, the intermediate region **104**, or the output coupling region **106**.

[0023] The grating **200** includes a grating material layer **203** disposed on a substrate **205**. In some embodiments, the grating material layer **203** may be disposed on one or more spacer layers (not shown) disposed on the substrate **205**. In embodiments including a spacer layer, the spacer layer is operable to provide support for the grating **200** and is of a thickness and material according to the desired optical characteristics of the grating **200**.

[0024] The substrate **205** may be formed from any suitable material and have any suitable thickness, provided that the substrate **205** can adequately transmit light in a desired wavelength or wavelength range and can serve as an adequate support for the grating **200**. In some embodiments, the material of the substrate **205** includes, but is not limited to, one or more of silicon (Si), silicon dioxide (SiO_2), glass, plastic, polycarbonate, and sapphire-containing materials. In some embodiments, the substrate **205** includes doped glass. For example, the substrate **205** includes glass doped with a heavy dopant such as lanthanum (La), zirconium (Zr), zinc (Zn), and the like. The materials of the substrate **205** may further have rollable and flexible properties. In some embodiments, the material of the substrate **205** includes, but is not limited to, materials having a refractive index between about 1.5 and about 2.4. For example, the substrate **205** may be a doped high index substrate having a refractive index between about 1.7 and about 2.4.

[0025] The grating material layer **203** includes at least one of silicon oxycarbide (SiOC), titanium oxide (TiO_x), TiO_x nanomaterials, niobium oxide (NbO_x), niobium-germanium (Nb_3Ge), silicon dioxide (SiO_2), silicon oxycarbonitride (SiOCN), vanadium (IV) oxide (VOx), aluminum oxide (Al_2O_3), indium tin oxide (ITO), zinc oxide (ZnO), tantalum pentoxide (Ta_2O_5), silicon nitride (Si_3N_4), Si_3N_4 silicon-rich, Si_3N_4 hydrogen-doped, Si_3N_4 boron-doped, silicon carbon nitrate (SiCN), titanium nitride (TiN), zirconium dioxide (ZrO_2), germanium (Ge), gallium phosphide (GaP), poly-crystalline (PCD), nanocrystalline diamond (NCD), and doped diamond containing materials. The grating material layer **203** may be formed over the surface of the substrate **205** by any suitable means. For example, the grating material layer **203** may be formed by one or more of PVD, chemical vapor deposition (CVD), plasma-enhanced CVD (PECVD), flowable CVD (FCVD), atomic layer deposition (ALD), and spin-on processes. In some embodiments, the material of the grating material layer **203** has a refractive index between about 1.5 and about 2.65. In some embodi-

ments, the material of the grating material layer **203** has a refractive index between about 3.5 and 4.0.

[0026] The grating material layer **203**, in accordance with the methods described herein, includes a plurality of fins **207** disposed thereon having a height h and a lateral distance d. In the embodiment illustrated in FIG. **2**, the height h of the fins **207** is defined as the distance from a surface **214** of the grating material layer **203** to a top surface **216** of the fins **207**. In embodiments without a grating material layer **203**, the height h of the fins **207** may be defined as the distance from a top surface of the substrate **205** to the top surface **216** of the fins **207**. A gap g is the distance between adjacent fins **207** of the grating **200**. In some embodiments, the gap g of each of the adjacent fins **207** of the plurality of fins **207** is substantially the same. In another embodiment, the gap g of at least one set of adjacent fins **207** is different than the gap g of additional sets of adjacent fins **207** of the plurality of fins **207**. In some embodiments (as shown in FIG. **2**), the plurality of fins **207** may have a single portion **209** of fins **207**, each fin **207** therein having the same slant angle θ' relative to the surface normal **215**. In some embodiments (not shown), the plurality of fins **207** may have two or more portions of fins **207**, each of which may have a different slant angle θ' relative to the surface normal **215** of the substrate **205**. In some embodiments, the material of the grating material layer **203** is selected based on the desired depth and slant angle of the plurality of fins **207**. In some embodiments, the fins **207** may have a slant angle θ' equal to zero relative the surface normal **215**, and thus, the fins **207** may be binary fins.

[0027] The grating **200** further includes an encapsulation layer **208** disposed over the plurality of fins **207**. The encapsulation layer **208** is a substantially planar layer of material disposed over the top surfaces **216** of the fins **207** that, together with the fins **207** and the surface **214** of the substrate **205** or top surface of the spacer layer, defines one or more air gaps (e.g., cavities) **218** disposed between adjacent fins **207**. In some embodiments, the encapsulation layer **208** has a thickness between about 5 nm and about 1000 nm, such as between about 50 nm and about 750 nm. For example, the encapsulation layer **208** has a thickness between about 100 nm and about 600 nm, such as between about 200 nm and about 400 nm, such as about 300 nm.

[0028] Typically, the encapsulation layer **208** has a refractive index that is lower than that of the grating material layer **203**. In some embodiments, the refractive index of the encapsulation layer **208** is between about 1.0 and about 1.7, such as between about 1.2 and about 1.5. In some embodiments, the encapsulation layer **208** has an absorption coefficient less than about 0.001. The encapsulation layer **208** may be formed of any suitable transparent materials, including but not limited to silica-containing materials and non-silica-containing materials, such as polymer-containing materials, for example, fluoropolymer materials. In some embodiments, the encapsulation layer **208** is formed of silicon dioxide (SiO_2) or a low-k dielectric films such as carbon- and nitride-doped silicon oxide (SiCON) or silicon carbon nitride (SiCN). In some embodiments, the encapsulation layer **208** includes fluorine-containing materials, such as aluminum fluoride (AlF_3) and magnesium fluoride (MgF_2). In other embodiments, the encapsulation layer **208** and the substrate **205** or the grating material layer **203** are formed of substantially the same materials.

[0029] Each air gap **218** has a height substantially similar to the height h of the fins **207** adjacent thereto and a width equal to the gap g between the adjacent fins **207**. The air gaps **218** may be filled with atmospheric air or any other suitable gas. Air has a refractive index of 1.0 and an absorption coefficient of 0 and thus, having the air gaps **218** filled with air may enable improved optical transmission through the gratings **200** as compared to using a gap-fill material or other coating. Accordingly, the air gaps **218** may enable better efficiency of the grating **200** and reduce the height h of the fins **207** needed in the optical device design. In some embodiments, the air gaps **218** are filled with one or more gases at or near atmospheric pressure. In other embodiments, the air gaps **218** are filled with one or more gases at sub-atmospheric pressure.

[0030] FIG. **3** is a schematic side view of an apparatus **300** for PVD deposition in accordance with at least some embodiments of the present disclosure. Specifically, FIG. **3** schematically depicts an apparatus **300** for angled PVD onto a grating to form a generally planar encapsulation layer thereon. The apparatus **300** generally includes a first PVD source **302**, a support **308** for supporting the grating **200**, and an optional collimator **310**. The first PVD source **302** is configured to provide a first directed stream of material (stream **312** as depicted in FIG. **3**) from the PVD source **302** toward the support **308** (and the grating **200** or other substrate disposed on the support **308**). In some embodiments, the apparatus **300** includes a second directed stream of material flux (stream **314** as depicted in FIG. **3**) from a PVD source **304** toward the support **308** (and the grating **200** or other substrate disposed on the support **308**). The first and/or second PVD sources **302**, **304** may be coupled to rotatable lid (not shown) or other rotatable support structure to enable up to 360 degrees or 180 degrees rotation of the first and/or second PVD sources **302**, **304** about a y-axis with respect to the support **308**.

[0031] The support **308** includes a support surface **311** to support the grating **200** such that one or more working surfaces of the grating **200** to be deposited on is exposed to the first stream **312** and the second stream **314**. The support **308** may be configured to move (e.g., scanned) along an x-, y-, and z-axes with respect to the first and second PVD sources **302**, **304**, as indicated by arrows **316**, where the movement can be linear or non-linear. Optionally, the support **308** may additionally be configured to rotate about the y-axis or tilt about x- and z-axes, as indicated by the arrows **316**. Generally, the support **308** is coupled to an actuator **309** for translational and rotational actuation of the support **308** about the x-, y-, and z-axes.

[0032] The first and second PVD sources **302**, **304** include target material to be sputter deposited on the grating **200**. In some embodiments, the target material of the first and second PVD sources **302**, **304** are the same target material. In other embodiments, the target material provided by the first and second PVD sources **302**, **304** are different from each other. In some embodiments, the target material includes one or more materials to be included in the encapsulation layer **208** described above. For example, the target material may include silica-containing materials and non-silica-containing materials, such as polymer-containing materials, for example, fluoropolymer materials. In some embodiments, the target material includes a silicon-containing (Si) material, such as silicon dioxide (SiO_2), carbon- and nitride-doped silicon oxide (SiCON), and/or silicon carbon

nitride (SiCN). In some embodiments, the target material includes aluminum-containing (Al) materials. In some embodiments, the target material includes fluorine-containing (F_2) materials, such as aluminum fluoride (AlF_3) and magnesium fluoride (MgF_2). Other materials may suitably be used as well in accordance with the teaching provided herein. The PVD sources **302**, **304** further include, or are coupled to, a power source to provide suitable power for forming a plasma proximate the target material and for sputtering atoms off of the target material. The power source can be either or both of a DC or an RF power source.

[0033] In some embodiments, unlike an ion beam or other ion source, the first and second PVD sources **302**, **304** are configured to provide mostly neutrals and few ions of the target material. As such, a plasma may be formed having sufficiently low density to avoid ionizing too many of the sputtered atoms of target material. The power or power density applied can be scaled for other size waveguides or other substrates. In addition, other parameters may be controlled to assist in providing mostly neutrals in the streams **312**, **314** of material. For example, the pressure may be controlled to be sufficiently low so that the mean free path is longer than the general dimensions of an opening of the first and second PVD sources **302**, **304** through which the stream of material flux passes toward the support **308**. In some embodiments, the pressure may be controlled to be between about 0.5 millitorr (mTorr) and about 25 mTorr, such as between about 1 mTorr and about 20 mTorr, such as between about 5 mTorr and about 15 mTorr, such as about 10 mTorr.

[0034] In embodiments consistent with the present disclosure, the lateral angles of incidence of the first and second streams **312**, **314** of material flux can be controlled. For example, FIG. **3** depicts the apparatus **300** illustrating material deposition angle α **330** of the first stream **312** from the first PVD source **302** and angle β **332** of the second stream **314** from the second PVD source **304** in accordance with at least some embodiments of the present disclosure. In some embodiments, the angles α **330** and β **332** can either be fixed or adjustable by tilting the first PVD source **302** as shown by arrow **332** and/or tilting the second PVD source **304** as shown by arrow **324**. Accordingly, the first and second PVD sources **302**, **304** are communicatively coupled to actuators **303**, **305** for tilting the PVD sources **302**, **304** about the x- and z-axes.

[0035] As described above, the apparatus **300** may include an optional collimator **310**. In some embodiments, the collimator **310** is a physical structure such as a shroud, a disk, or a plurality of baffles having one or more openings **340** that is interposed between the PVD sources **302**, **304** and the grating **200** such that the streams **312**, **314** of material flux travel through the structure (e.g., collimator **310**). Any materials with an angle too large or too small to pass through the openings **340** of the collimator **310** will be blocked, thus limiting a permitted angular range of material reaching the grating **200**. In some embodiments, the collimator **310** may include a single opening. In other embodiments, the apparatus **300** includes a single collimator **310** having multiple openings. Still, in other embodiments, the collimator **310** may include multiple collimators, each having one or more openings. As used herein, the collimator **310** functions as a spread angle control apparatus that controls the angle of the spread of materials being sputtered from the first and/or second PVD sources **302**, **304**. In some embodiments, the one or more collimators **310** can move linearly as shown by the arrow **328**.

[0036] In some embodiments, the angles of incidence **330'**, **332'** at which the streams **312**, **314** of material actually contact one or more surfaces of the grating **200** may be different than the angles of incidence **330**, **332** at which the streams **312**, **314** of material are provided by the first PVD source **302** and the second PVD source **304**. The angles of incidence **330'**, **332'** at which the streams **312**, **314** of material actually contact the grating **200** surfaces can be controlled (e.g., altered) by one or more of the following: the angles of incidence **330**, **332** at which the streams of material are provided by the first and second PVD sources **302**, **304**, the number and placement of openings in the optional collimator **310**, the linear position of the optional collimator **310** relative to the PVD sources **302**, **304** and the grating **200** or support **308**, and the rotation **326** and linear movement **316** of the support **308**.

[0037] The methods and embodiments disclosed herein advantageously enable deposition of materials to encapsulate gratings of waveguides. For example, FIG. **4** is a flow diagram of a method **400** of forming the encapsulation **208** layer over a plurality of fins **207** of the grating **200** using the apparatus **300**, according to an embodiment. FIGS. **5**A and **5**B are schematic illustrations of the method **400** of forming the encapsulation layer **208**, according to an embodiment. Specifically, FIGS. **5**A and **5**B depict schematic cross-sectional views of the grating **200** having the encapsulation layer **208** deposited thereon. Although the grating **200** is depicted, other structures including optical devices having features such as pillars, trenches, vias, or the like may equally benefit from the methods described herein.

[0038] The method **400** for depositing the encapsulation layer **208** on the grating **200** begins at operation **402**, where a first stream **312** of material is provided from the first PVD source **302** towards one or more surfaces of the fins **207** in a first direction. For example, the first PVD source **302** may be biased and bombarded with inert gas ions, such as argon (Ar), krypton (Kr), and xenon (Xe) ions, to sputter deposit the first stream **312** of material onto the plurality of fins **207**. In some embodiments, the PVD chemistry is a reactive PVD chemistry. For example, the PVD chemistry may include oxygen (O_2), nitrogen (N_2), hydrogen (H_2), a mixture of argon and oxygen, and/or a mixture of argon and fluorine (F_2) gases. The first stream **312** of material is provided at the first angle α **330** which is non-perpendicular relative to a plane of the top surface **214** of the substrate **205**. The first angle α **330** is selected based upon the desired dimensions of the encapsulation layer **208** and the fins **207**, as well as the slant angle(s) of the fins **207**. In some embodiments, the first angle α **330** is between about 45 degrees and about 89 degrees relative to the surface normal **215** of the substrate **205**, such as between about 60 degrees and about 89 relative to the surface normal **215** of the substrate **205**. For example, the first angle α **330** is between about 75 degrees and about 85 degrees, such as between about 78 degrees and about 82 degrees, relative to the surface normal **215** of the substrate **205**.

[0039] At operation **404**, the first stream **312** of material is optionally directed through the collimator **310** having at least one opening **340** to further limit the angular range (e.g., spread) of the first stream **312** passing therethrough, thus further limiting the angle of deposition of the first stream

312 of material onto the fins 207. In some embodiments, it is the combination of the angle of the stream provided by the first PVD source 302, the physical structure and placement of the optional collimator 310, a surface angle of the support 308 that controls the angle of incidence 330' that the first stream 312 of material contacts the fins 207. By controlling the angle of incidence 330', as well as linearly moving the grating 200 relative to the first PVD source 302 and/or the collimator 310 during deposition, selective and asymmetric deposition of the target material onto the fins 207 may be accomplished. Specifically, at operation 406 (depicted in FIG. 5A), the first stream 312 material is deposited only on desired surfaces of the fins 207, such as the top surface 216 and/or a top portion of a first sidewall 518 of at least one fin 207. As shown in FIG. 5A, there is no deposition of the first stream 312 of material on a second sidewall 520 and little or no deposition of the first stream 312 of material near the top surface 214 of the substrate 205. Accordingly, one or more first lateral protrusions 530 are formed by the deposition of the first stream 312 of material that extends laterally from the top portion of the first sidewall 518 and/or the top surface 216 of the fins 207. The first lateral protrusions 530 eventually form a portion of the encapsulation layer 208 upon completion of the method 400.

[0040] At operation 408, which may occur simultaneously with or sequentially after any of the operations 402 through 406 above, a second stream 314 of material is provided from the second PVD source 304 towards one or more surfaces of the fins 207 in a second direction. For example, the second PVD source 304 may be biased and bombarded with inert gas ions to sputter deposit the second stream 314 of material onto the plurality of fins 207. The second stream 314 of material is provided at the second angle β 332 that is non-perpendicular relative to a plane of the top surface 214 of the substrate 205. The second angle β 332 is selected based upon the desired dimensions of the encapsulation layer 208 and the fins 207, as well as the slant angle(s) of the fins 207. In some embodiments, the second angle β 332 is between about 45 degrees and about 89 degrees relative to the surface normal 215 of the substrate 205, such as between about 60 degrees and about 89 degrees relative to the surface normal 215 of the substrate 205. For example, the first angle β 332 is between about 75 degrees and about 85 degrees, such as between about 78 degrees and about 82 degrees, relative to the surface normal 215 of the substrate 205.

[0041] At operation 410, the second stream 314 of material is optionally directed through the collimator 310 having at least one opening 340 to further limit the angular range (e.g., spread) of the second stream 314 passing therethrough, thus further limiting the angle of deposition of second stream 314 of material onto the fins 207. As described above, the combination of the angle of the stream provided by the second PVD source 304, the physical structure and placement of the optional collimator 310, and a surface angle of the support 308 may control the angle of incidence 332' that the second stream 314 of material contacts the fins 207.

[0042] At operation 412 (depicted in FIG. 5B), the second stream 314 of material is deposited only on desired surfaces of the fins 207, such as the top surface 216 and/or a top portion of the second sidewall 520 of at least one fin 207. As shown in FIG. 5B, there is no deposition of the second stream 314 of material on the first sidewall 518 and little or no deposition of the second stream 314 of material near the top surface 214 of the substrate 205. Accordingly, one or more second lateral protrusions 532 are formed by the deposition of the second stream 314 of material that extends laterally towards the first lateral protrusions 530 from the top portion of the second sidewall 520 and/or the top surface 216 of the fins 207. Upon further deposition as described above, first lateral protrusions 530 and the second lateral protrusions 532 eventually converge and integrate with one another to form the encapsulation layer 208 (depicted in FIG. 2).

[0043] FIG. 6 is a flow diagram of an alternative method 600 of forming the encapsulation layer 208 over a plurality of fins 207 of the grating 200 using the apparatus 300, according to an embodiment. The method 600 is substantially similar to method 400 and includes several operations 602, 204, and 606 that are substantially similar to the operations 402, 404, and 406. Accordingly, only operations 608, 610, 612, and 614 of the method 600 will be herein described for clarity. FIGS. 7A and 7B are schematic illustrations of the method 600 of forming the encapsulation layer 208, according to an embodiment. Specifically, FIGS. 7A and 7B depict schematic cross-sectional views of the grating 200 having the encapsulation layer 208 deposited thereon. Although the grating 200 is depicted, other structures including optical devices having features such as pillars, trenches, vias, or the like may equally benefit from the methods described herein.

[0044] After deposition of the first stream 312 of material on desired surfaces of the fins 207 to form the first lateral protrusions 530 (shown in FIG. 7A), the grating 200 and/or the first PVD source 302 may be rotated about the y-axis at operation 608. For example, the support 308 and/or the first PVD source 302 may be rotated between about 1 degree and about 360 degrees, such as between about 1 degree and about 180 degrees, such as between about 1 degree and about 90 degrees, about the y-axis. Rotation of the support 308 and/or the first PVD source 302 causes the first PVD source 302 to have a different translational and angular orientation relative to the grating 200 than during formation of the first lateral protrusions 530, shown in FIG. 7B. Accordingly, rotation of the first PVD source 302 and/or the support 308 enables the provision of the second stream 314 of material from the first PVD source 302 in a second direction without the utilization of a second PVD source. Thus, the second lateral protrusions 532 may be formed to complete the formation of the encapsulation layer 208 with only the first PVD source 302.

[0045] At operation 610, the second stream 314 of material is provided from the first PVD source 302 towards one or more surfaces of the fins 207 in the second direction. For example, after rotation of the first PVD source 302 and/or the grating 200 on the support 308, the first PVD source 302 may again be biased and bombarded with inert gas ions to sputter deposit the second stream 314 of material onto the plurality of fins 207, this time in the second direction. Similar to operation 408, the second stream 314 of material is provided at the second angle β 332 that is based upon the desired dimensions of the encapsulation layer 208 and the fins 207, as well as the slant angle(s) of the fins 207. In some embodiments, the second angle β 332 is between about 45 degrees and about 89 degrees relative to the surface normal 215 of the substrate 205, such as between about 60 degrees and about 89 degrees relative to the surface normal 215 of the substrate 205. For example, the first angle β 332 is between about 75 degrees and about 85 degrees, such as

between about 78 degrees and about 82 degrees, relative to the surface normal **215** of the substrate **205**.

[0046] At operation **612**, the second stream **314** of material is optionally directed through the collimator **310** having at least one opening **340** to further limit the angular range (e.g., spread) of the second stream **314** passing therethrough, thus further limiting the angle of deposition of second stream **314** of material onto the fins **207**. As described above, the combination of the angle of the stream provided by the first PVD source **302**, the physical structure and placement of the optional collimator **310**, and a surface angle of the support **308** may control the angle of incidence **332'** that the second stream **314** of material contacts the fins **207**.

[0047] At operation **614** (depicted in FIG. **7**B), the second stream **314** of material is deposited only on desired surfaces of the fins **207**, such as the top surface **216** and/or a top portion of the second sidewall **520** of at least one fin **207**. As shown in FIG. **7**B, there is no deposition of the second stream **314** of material on the first sidewall **518** and little or no deposition of the second stream **314** of material near the top surface **214** of the substrate **205**. Accordingly, one or more second lateral protrusions **532** are formed by the deposition of the second stream **314** of material that extends laterally towards the first lateral protrusions **530** from the top portion of the second sidewall **520** and/or the top surface **216** of the fins **207**. Upon further deposition, first lateral protrusions **530** and the second lateral protrusions **532** eventually converge and integrate with one another to form the encapsulation layer **208** (depicted in FIG. **2**).

[0048] Although depicted and described with reference to a single PVD source, the method **600** may be performed with both the first and second PVD sources **302**, **304**. Accordingly, two or more streams of material may be provided and deposited simultaneously or sequentially during any of the operations **602** through **614** above. Furthermore, in some embodiments, deposition may be performed simultaneously while the support **308** and/or the first and second PVD sources **302**, **304** are rotated.

[0049] In summation, embodiments described herein provide waveguides with encapsulated gratings and methods of forming the same. The utilization of angled or direction PVD enables the formation of an encapsulation layer over a grating such that air gaps are formed between adjacent fins thereof. The utilization of air gaps between adjacent fins of a grating rather than a gap fill material may enable improved optical transmission through the grating, thus enhancing the optical performance of optical devices integrating such gratings.

[0050] While the foregoing is directed to examples of the present disclosure, other and further examples of the disclosure may be devised without departing from the basic scope thereof, and the scope thereof is determined by the claims that follow.

What is claimed is:

1. A waveguide combiner, comprising

a substrate comprising a substrate material;

an input coupling grating comprising:

first structures of a grating material disposed on the substrate;

an encapsulation layer of an encapsulation material disposed on top surfaces of the first structures and upper portion of sidewalls of the first structures, the encapsulation layer, the substrate, and the first structures define cavities having a refractive index of about 1.0; and

an output coupling grating comprising:

second structures of the grating material disposed on the substrate; and

the encapsulation layer of the encapsulation material disposed on the top surfaces of the second structures and the upper portion of the sidewalls of the second structures, the encapsulation layer, the substrate, and the second structures define the cavities having the refractive index of about 1.0.

2. The waveguide combiner of claim **1**, wherein the sidewalls of the first structures have at a non-perpendicular angle relative to the substrate.

3. The waveguide combiner of claim **1**, wherein the grating material comprises:

at least one of silicon oxycarbide (SiOC), titanium oxide (TiO_X), TiO_X nanomaterials, niobium oxide (NbO_X), niobium-germanium (Nb_3Ge), silicon dioxide (SiO_2), silicon oxycarbonitride (SiOCN), vanadium (IV) oxide (VO_X), aluminum oxide (Al_2O_3), indium tin oxide (ITO), zinc oxide (ZnO), tantalum pentoxide (Ta_2O_5), silicon nitride (Si_3N_4), Si_3N_4 silicon-rich, Si_3N_4 hydrogen-doped, Si_3N_4 boron-doped, silicon carbon nitrate (SiCN), titanium nitride (TiN), zirconium dioxide (ZrO_2), germanium (Ge), gallium phosphide (GaP), poly-crystalline (PCD), nanocrystalline diamond (NCD), or doped diamond containing materials.

4. The waveguide combiner of claim **1**, wherein the grating material has a grating refractive index between about 1.5 to about 2.65, or about 3.5 to about 4.0.

5. The waveguide combiner of claim **1**, wherein the substrate material comprises one or more of silicon (Si), silicon dioxide (SiO_2), plastic, polycarbonate, sapphire-containing materials, lanthanum (La) doped glass, zirconium (Zr) doped glass, or Zinc (Zn) doped glass.

6. The waveguide combiner of claim **1**, wherein the substrate material has a substrate refractive index between about 1.5 to about 2.4.

7. The waveguide combiner of claim **1**, wherein the encapsulation material comprises silica-containing materials, polymer-containing materials, fluoropolymer materials silicon dioxide (SiO_2), carbon- and nitride-doped silicon oxide (SiCON), silicon carbon nitride (SiCN), aluminum fluoride (AlF_3), or magnesium fluoride (MgF_2).

8. The waveguide combiner of claim **1**, wherein the encapsulation material has a encapsulation refractive index between about 1.0 to about 1.7.

9. The waveguide combiner of claim **1**, wherein an encapsulation refractive index of the encapsulation layer is lower than a grating refractive index of the grating material.

10. The waveguide combiner of claim **1**, wherein the cavities have atmospheric air disposed therein at or about atmospheric pressure.

11. The waveguide combiner of claim **1**, wherein the cavities have atmospheric air disposed therein at sub-atmospheric pressure.

12. A waveguide combiner, comprising

a substrate comprising a substrate material;

an input coupling grating comprising:

first structures of a grating material disposed on the substrate, the first structures having sidewalls at a non-perpendicular angle relative to the substrate;

an encapsulation layer of an encapsulation material disposed on top surfaces of the first structures, the encapsulation layer, the substrate, and the first structures define cavities having a refractive index of about 1.0; and

an output coupling grating comprising:

second structures of the grating material disposed on the substrate; and

the encapsulation layer of the encapsulation material disposed on the top surfaces of the second structures, the encapsulation layer, the substrate, and the second structures define the cavities having the refractive index of about 1.0.

13. The waveguide combiner of claim **12**, wherein the grating material comprises:

at least one of silicon oxycarbide (SiOC), titanium oxide (TiO_X), TiO_X nanomaterials, niobium oxide (NbO_X), niobium-germanium (Nb_3Ge), silicon dioxide (SiO_2), silicon oxycarbonitride (SiOCN), vanadium (IV) oxide (VO_X), aluminum oxide (Al_2O_3), indium tin oxide (ITO), zinc oxide (ZnO), tantalum pentoxide (Ta_2O_5), silicon nitride (Si_3N_4), Si_3N_4 silicon-rich, Si_3N_4 hydrogen-doped, Si_3N_4 boron-doped, silicon carbon nitrate (SiCN), titanium nitride (TiN), zirconium dioxide (ZrO_2), germanium (Ge), gallium phosphide (GaP), poly-crystalline (PCD), nanocrystalline diamond (NCD), or doped diamond containing materials.

14. The waveguide combiner of claim **12**, wherein the grating material has a grating refractive index between about 1.5 to about 2.65, or about 3.5 to about 4.0.

15. The waveguide combiner of claim **12**, wherein the substrate material comprises one or more of silicon (Si), silicon dioxide (SiO_2), plastic, polycarbonate, sapphire-containing materials, lanthanum (La) doped glass, zirconium (Zr) doped glass, or Zinc (Zn) doped glass.

16. The waveguide combiner of claim **12**, wherein the substrate material has a refractive index between about 1.5 to about 2.4.

17. The waveguide combiner of claim **12**, wherein the encapsulation material comprises silica-containing materials, polymer-containing materials, fluoropolymer materials silicon dioxide (SiO_2), carbon- and nitride-doped silicon oxide (SiCON), silicon carbon nitride (SiCN), aluminum fluoride (AlF_3), or magnesium fluoride (MgF_2).

18. The waveguide combiner of claim **12**, wherein the encapsulation material has a refractive index between about 1.0 to about 1.7.

19. The waveguide combiner of claim **12**, wherein an encapsulation refractive index of the encapsulation layer is lower than a grating refractive index of the grating material.

20. A waveguide combiner, comprising

a substrate, comprising a substrate material;

an input coupling grating comprising:

first structures of a grating material disposed on the substrate the first structures having sidewalls at a non-perpendicular angle relative to the substrate;

an encapsulation layer of an encapsulation material disposed on top surfaces of the first structures and upper portion of sidewalls of the first structures, the encapsulation layer, the substrate, and the first structures define cavities having a refractive index of about 1.0; and

an output coupling grating comprising:

second structures of the grating material disposed on the substrate; and

the encapsulation layer of the encapsulation material disposed on the top surfaces of the second structures and the upper portion of the sidewalls of the second structures, the encapsulation layer, the substrate, and the second structures define the cavities having the refractive index of about 1.0.

* * * * *