US 20240124969A1

(19) **United States**

(12) **Patent Application Publication**

PI et al.

(10) **Pub. No.: US 2024/0124969 A1**

(43) **Pub. Date: Apr. 18, 2024**

(54) **ION IMPLANTATION TO MODIFY GLASS LOCALLY FOR OPTICAL DEVICES**

(71) Applicant: **Applied Materials, Inc.**, Santa Clara, CA (US)

(72) Inventors: **Nai-Wen PI**, San Jose, CA (US); **Jinxin FU**, Fremont, CA (US); **Kang LUO**, San Jose, CA (US); **Ludovic GODET**, Sunnyvale, CA (US)

(21) Appl. No.: **18/537,504**

(22) Filed: **Dec. 12, 2023**

Related U.S. Application Data

(62) Division of application No. 17/655,849, filed on Mar. 22, 2022, now Pat. No. 11,873,554.

(60) Provisional application No. 63/165,958, filed on Mar. 25, 2021.

Publication Classification

(51) **Int. Cl.**

C23C 14/48	(2006.01)
C03C 23/00	(2006.01)
C23C 14/00	(2006.01)
C23C 14/02	(2006.01)
C23C 14/58	(2006.01)

(52) **U.S. Cl.**

CPC ***C23C 14/48*** (2013.01); ***C03C 23/0095*** (2013.01); ***C23C 14/0031*** (2013.01); ***C23C 14/021*** (2013.01); ***C23C 14/5873*** (2013.01); *G02B 6/10* (2013.01)

(57) **ABSTRACT**

Embodiments described herein provide for optical devices with methods of forming optical device substrates having at least one area of increased refractive index or scratch resistance. One method includes disposing an etch material on a discrete area of an optical device substrate or an optical device layer, disposing a diffusion material in the discrete area, and removing excess diffusion material to form an optical material in the optical device substrate or the optical device layer having a refractive index greater than or equal to 2.0 or a hardness greater than or equal to 5.5 Mohs.

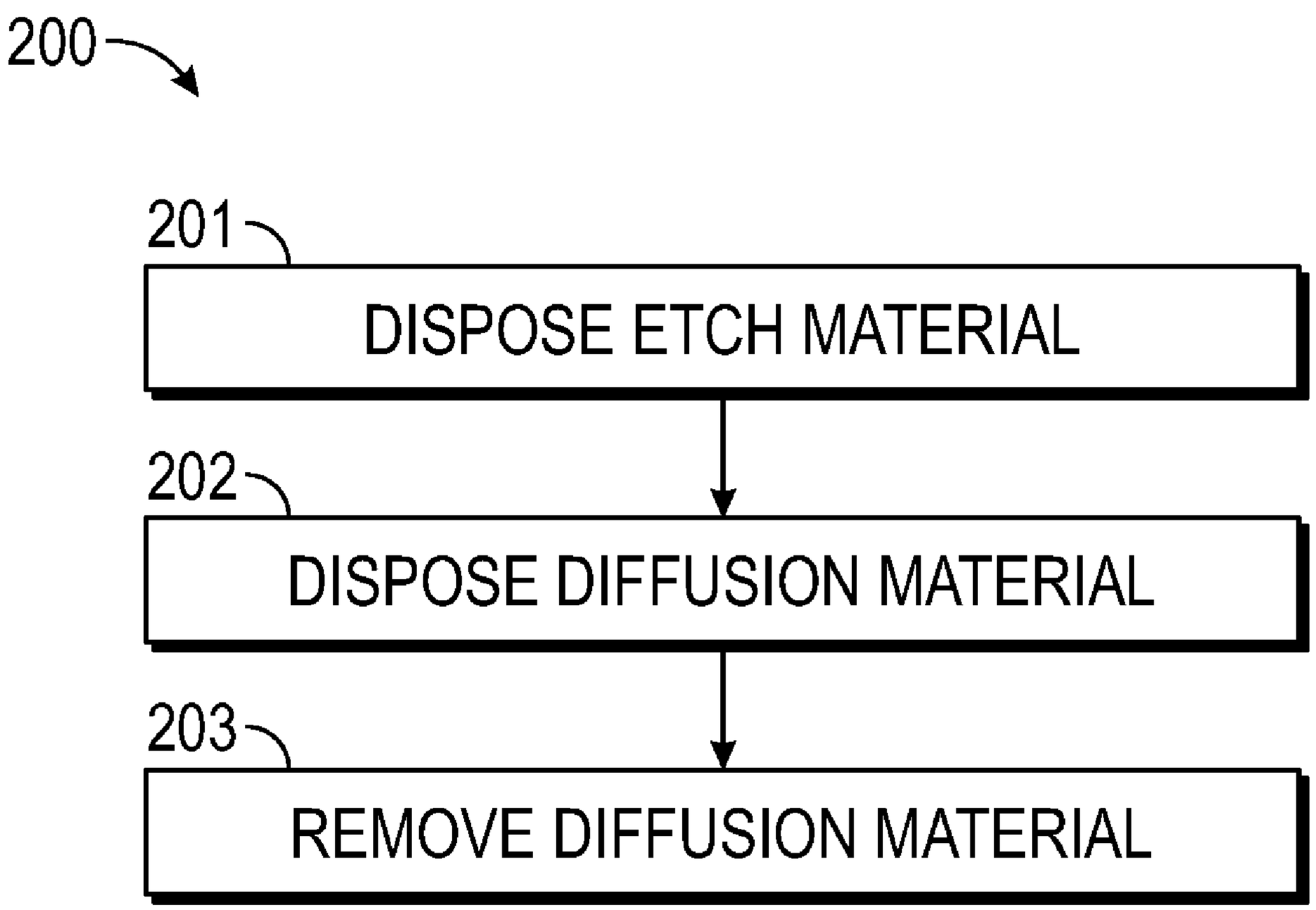

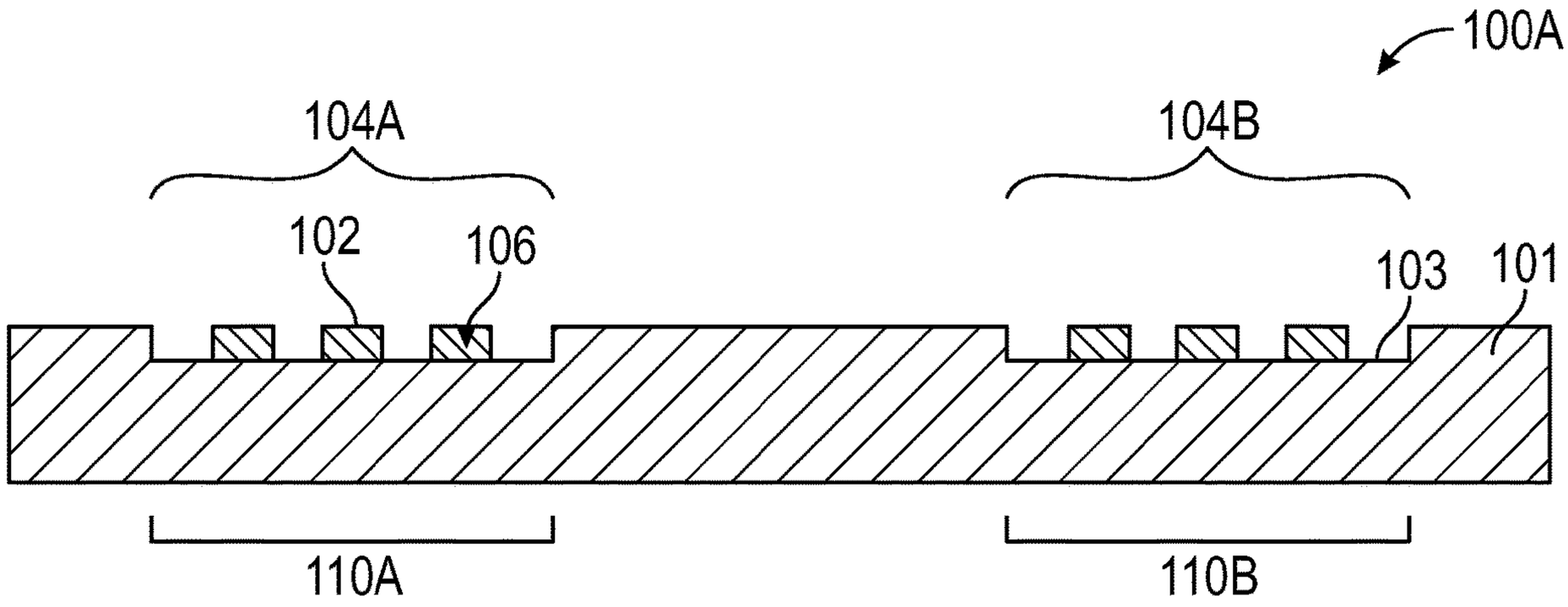

FIG. 1A

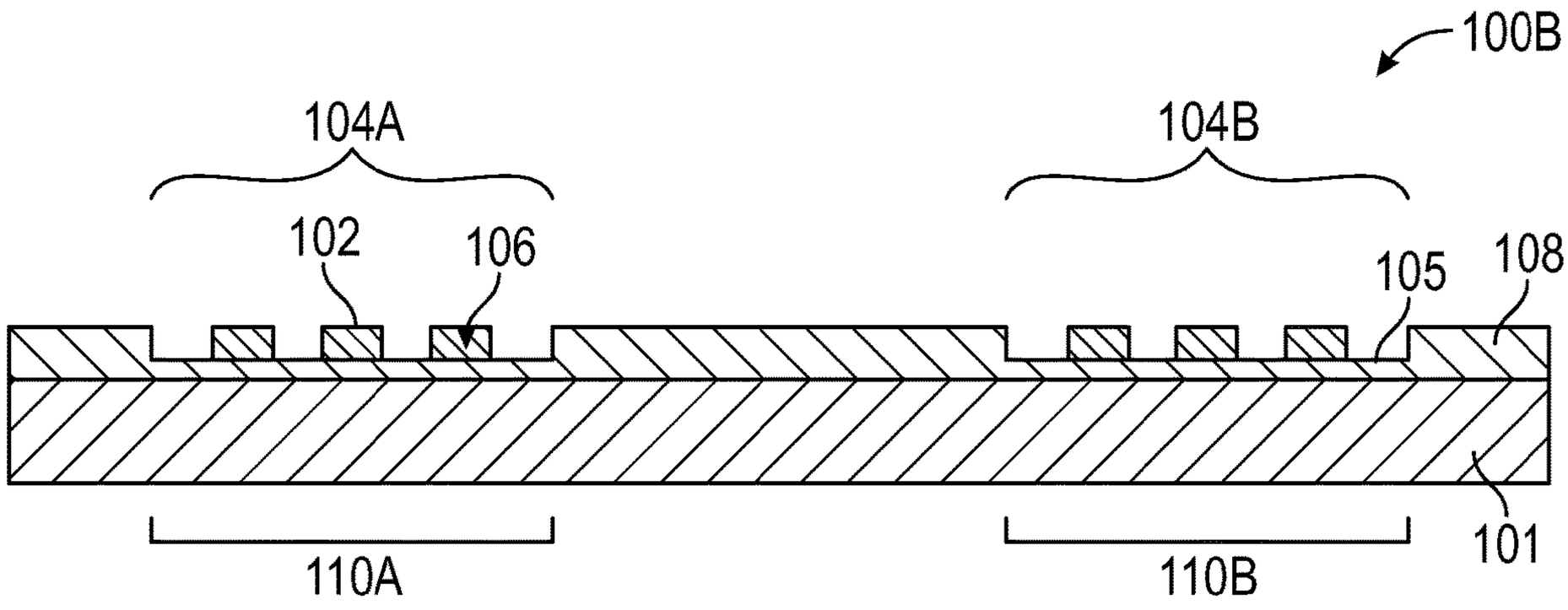

FIG. 1B

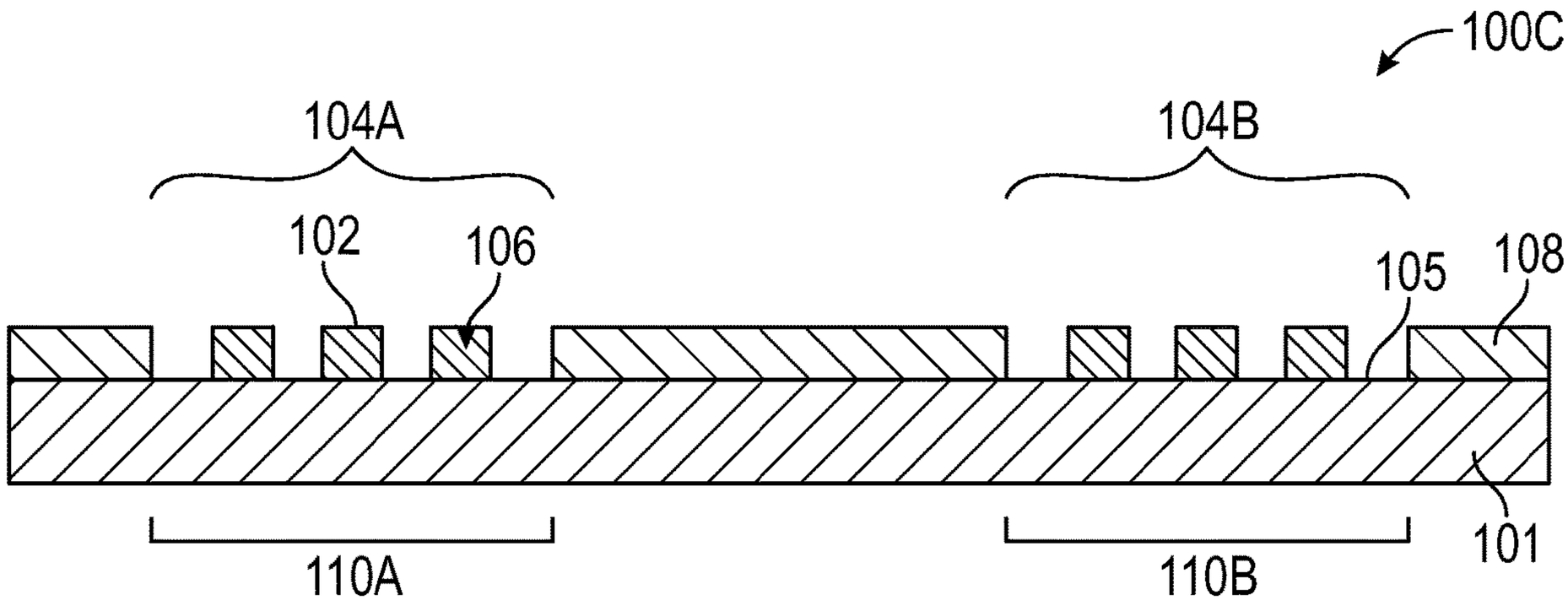

FIG. 1C

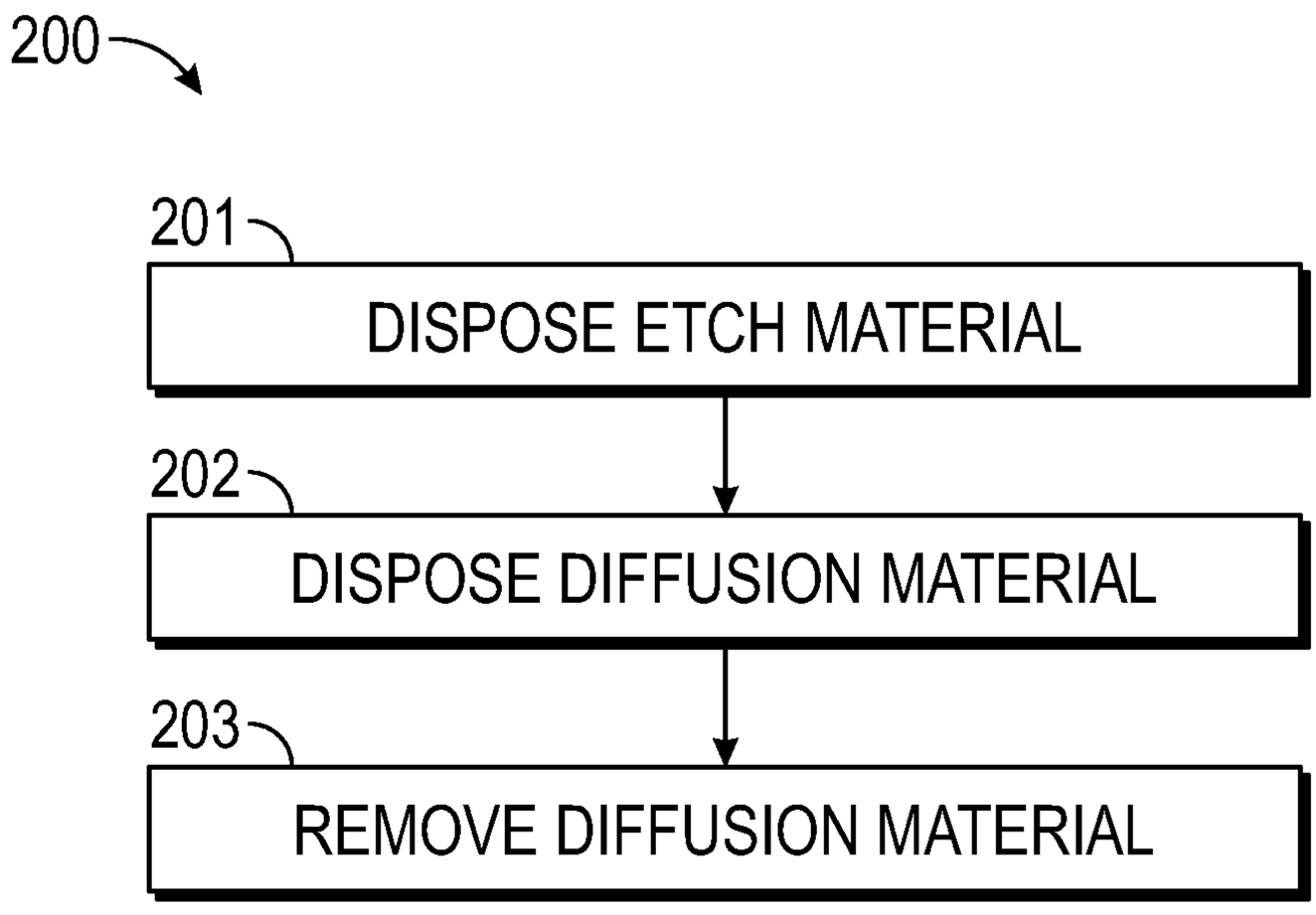
200
201
DISPOSE ETCH MATERIAL
202
DISPOSE DIFFUSION MATERIAL
203
REMOVE DIFFUSION MATERIAL

FIG. 2

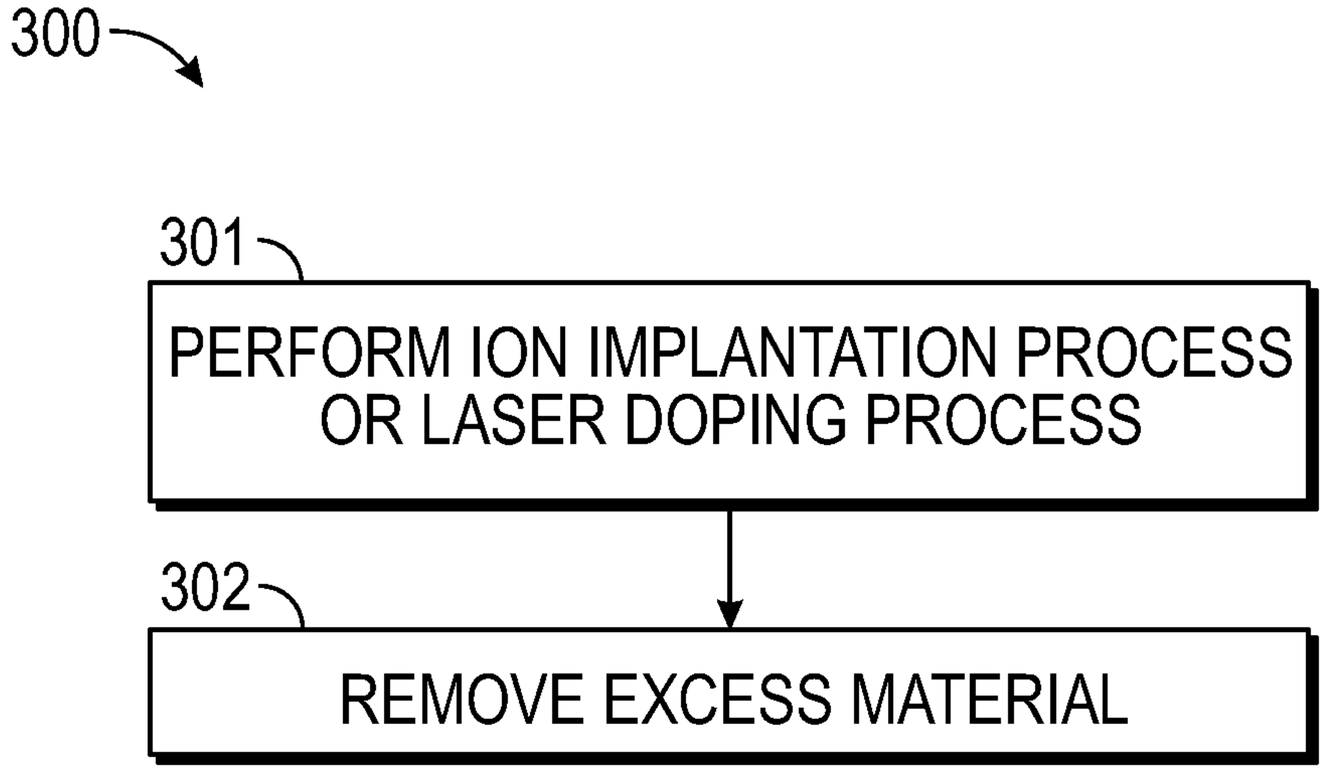
300
301
PERFORM ION IMPLANTATION PROCESS OR LASER DOPING PROCESS
302
REMOVE EXCESS MATERIAL

FIG. 3

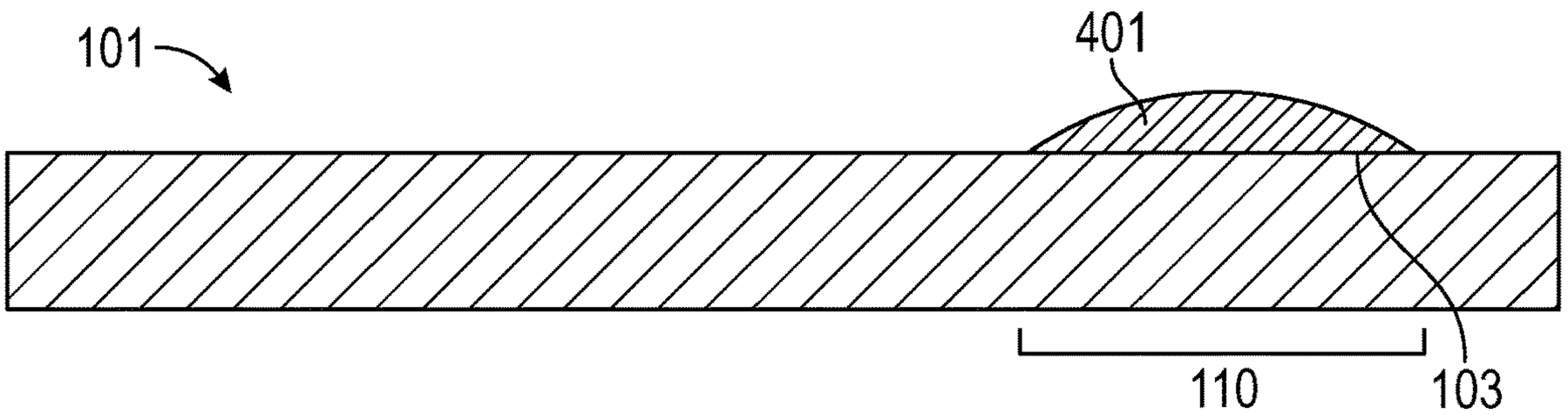

FIG. 4A

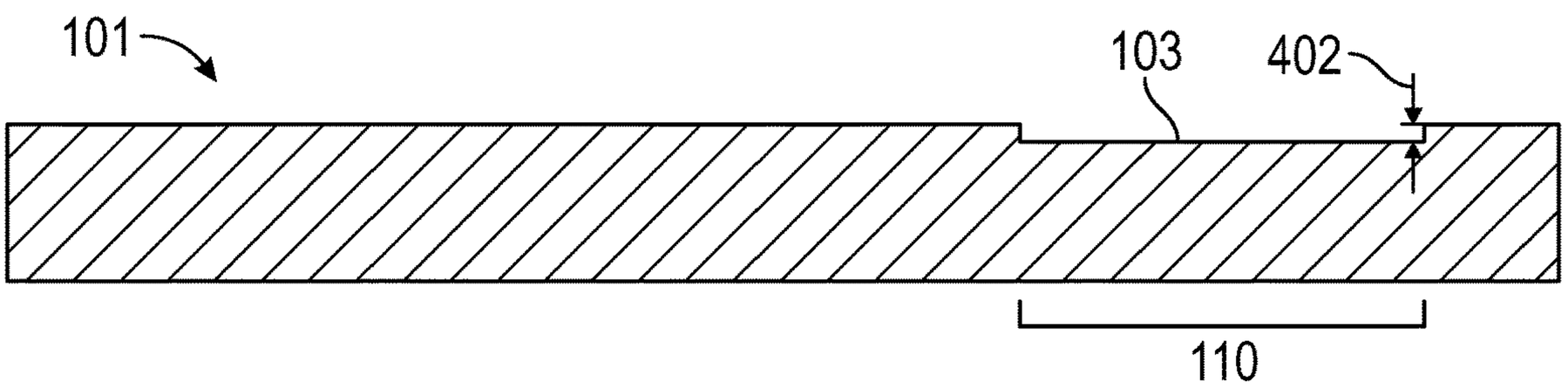

FIG. 4B

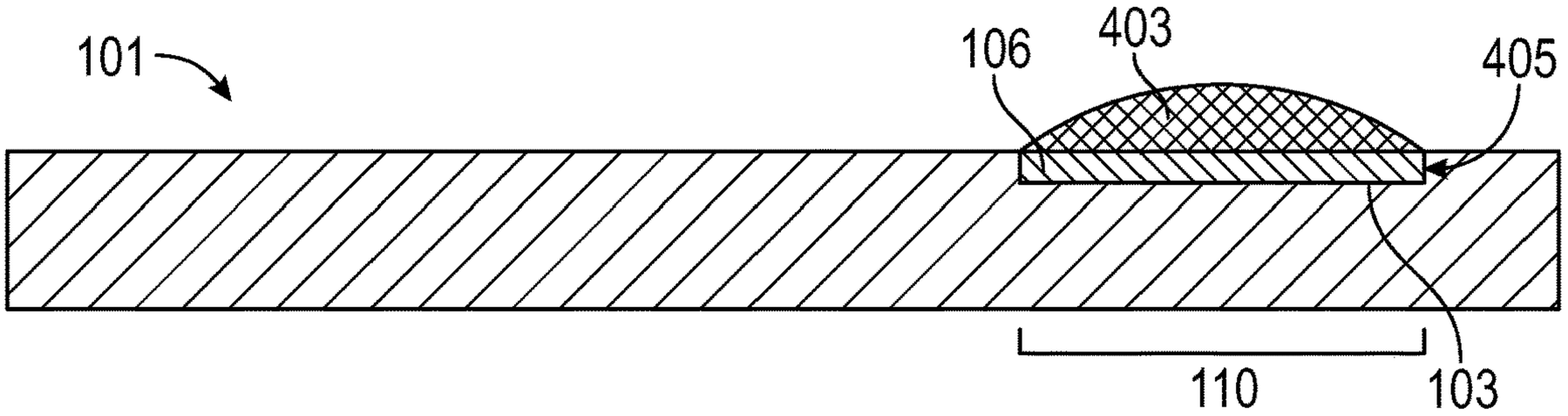

FIG. 4C

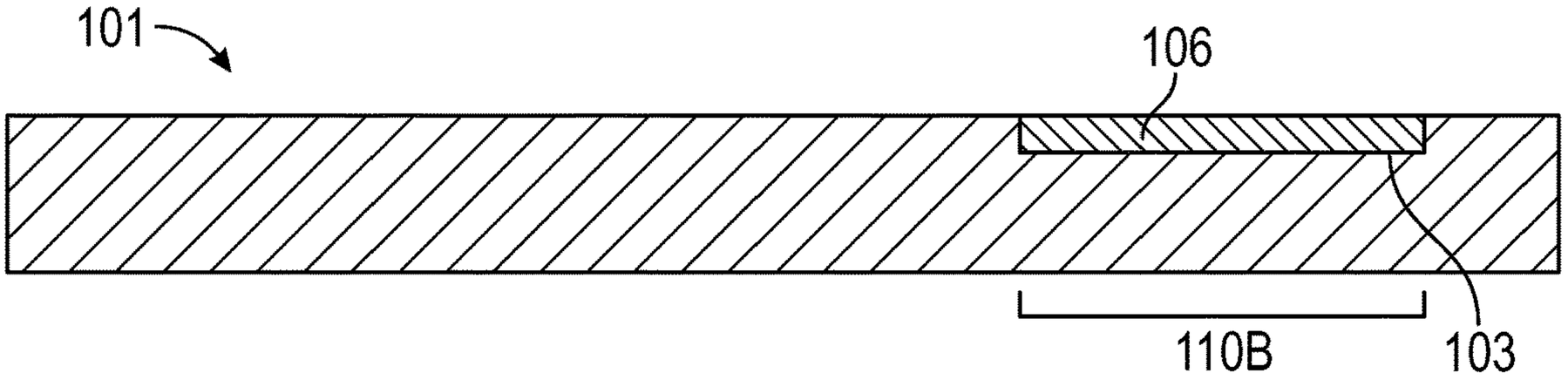

FIG. 4D

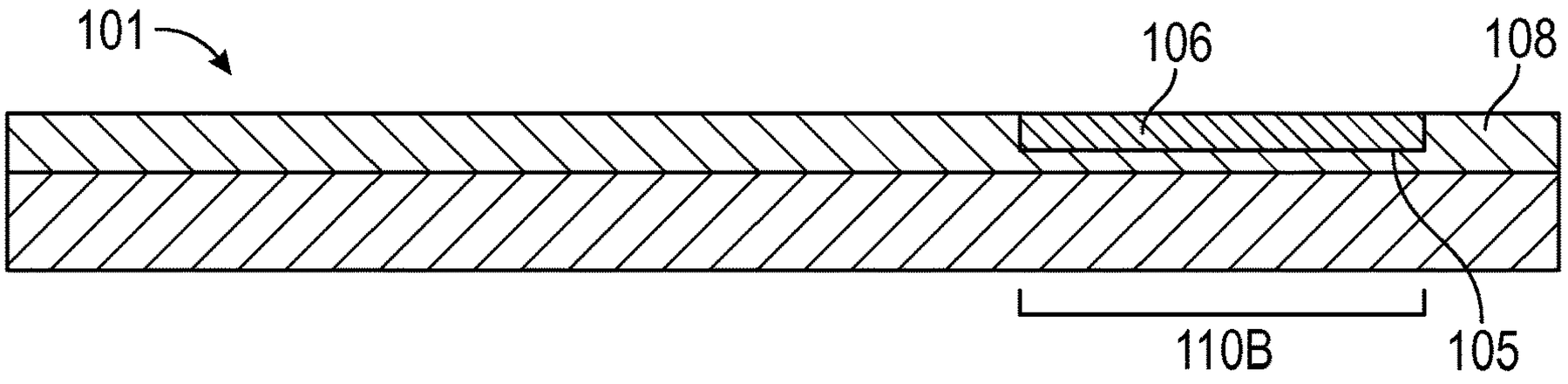

FIG. 4E

ION IMPLANTATION TO MODIFY GLASS LOCALLY FOR OPTICAL DEVICES

CROSS-REFERENCE TO RELATED APPLICATIONS

[0001] This application is a divisional application of U.S. patent application Ser. No. 17/655,849, filed Mar. 22, 2022 which claims priority to U.S. Provisional Patent Application Ser. No. 63/165,958, filed on Mar. 25, 2021, which herein are incorporated by reference.

BACKGROUND

Field

[0002] Embodiments of the present disclosure generally relate to optical devices for augmented, virtual, and mixed reality. More specifically, embodiments described herein provide for methods of forming discrete regions of optical device substrates having at least one discrete area of high refractive index or scratch resistant optical material.

Description of the Related Art

[0003] Virtual reality is generally considered to be a computer generated simulated environment in which a user has an apparent physical presence. A virtual reality experience can be generated in 3D and viewed with a head-mounted display (HMD), such as glasses or other wearable display devices that have near-eye display panels as lenses to display a virtual reality environment that replaces an actual environment. Augmented reality, however, enables an experience in which a user can still see through the display lenses of the glasses or other HMD device to view the surrounding environment, yet also see images of virtual objects that are generated to appear as part of the environment. Augmented reality can include any type of input, such as audio and haptic inputs, as well as virtual images, graphics, and video that enhance or augment the environment that the user experiences. As an emerging technology, there are many challenges and design constraints with augmented reality.

[0004] One such challenge is displaying a virtual image overlaid on an ambient environment. Optical devices including waveguide combiners, such as augmented reality waveguide combiners, and flat optical devices, such as metasurfaces, are used to assist in overlaying images. Generated light is propagated through an optical device until the light exits the optical device and is overlaid on the ambient environment. Optical devices include optical device structures disposed on a glass substrate. The optical devices may benefit from optical device structures having at least one of a high refractive index, i.e. a refractive index great than about 2.0, or scratch resistance.

[0005] Accordingly, what is needed in the art are methods of forming optical device substrates having at least one discrete area of high refractive index or scratch resistant optical material.

SUMMARY

[0006] In one embodiment, a method is provided. The method includes disposing an etch material on a discrete area of an optical device substrate or an optical device layer, disposing a diffusion material in the discrete area, and removing excess diffusion material to form an optical material in the optical device substrate or the optical device layer having a refractive index greater than or equal to 2.0 or a hardness greater than or equal to 5.5 Mohs.

[0007] In another embodiment, a method is provided. The method includes performing an implantation process on a discrete area of an optical device substrate or an optical device layer and removing excess implanted material to form an optical material in the optical device substrate or the optical device layer having a refractive index greater than or equal to 2.0 or a hardness greater than or equal to 5.5 Mohs.

[0008] In yet another embodiment, a method is provided. The method includes performing a laser doping process on a discrete area of an optical device substrate or an optical device layer and removing excess doped material to form an optical material in the optical device substrate or the optical device layer having a refractive index greater than or equal to 2.0 or a hardness greater than or equal to 5.5 Mohs.

BRIEF DESCRIPTION OF THE DRAWINGS

[0009] So that the manner in which the above recited features of the present disclosure can be understood in detail, a more particular description of the disclosure, briefly summarized above, may be had by reference to embodiments, some of which are illustrated in the appended drawings. It is to be noted, however, that the appended drawings illustrate only exemplary embodiments and are therefore not to be considered limiting of its scope, and may admit to other equally effective embodiments.

[0010] FIGS. **1**A-**1**C are schematic, cross-sectional views of an optical device according to embodiments.

[0011] FIG. **2** is a flow diagram of a method for forming an optical device substrate according to embodiments.

[0012] FIG. **3** is a flow diagram of a method for forming an optical device substrate according to embodiments.

[0013] FIGS. **4**A-**4**E are schematic, cross-sectional views of a substrate according to embodiments.

[0014] To facilitate understanding, identical reference numerals have been used, where possible, to designate identical elements that are common to the figures. It is contemplated that elements and features of one embodiment may be beneficially incorporated in other embodiments without further recitation.

DETAILED DESCRIPTION

[0015] Embodiments of the present disclosure generally relate to optical devices for augmented, virtual, and mixed reality. More specifically, embodiments described herein provide for optical devices with methods of forming optical device substrates having at least one area of increased refractive index or scratch resistance.

[0016] In one embodiment, a method is provided. The method includes disposing an etch material on a discrete area of an optical device substrate or an optical device layer, disposing a diffusion material in the discrete area, and removing excess diffusion material to form an optical material in the optical device substrate or the optical device layer having a refractive index greater than or equal to 2.0 or a hardness greater than or equal to 5.5 Mohs.

[0017] In another embodiment, a method is provided. The method includes performing an implantation process on a discrete area of an optical device substrate or an optical device layer and removing excess implanted material to form an optical material in the optical device substrate or the

optical device layer having a refractive index greater than or equal to 2.0 or a hardness greater than or equal to 5.5 Mohs.

[0018] In yet another embodiment, a method is provided. The method includes performing a laser doping process on a discrete area of an optical device substrate or an optical device layer and removing excess doped material to form an optical material in the optical device substrate or the optical device layer having a refractive index greater than or equal to 2.0 or a hardness greater than or equal to 5.5 Mohs.

[0019] FIGS. **1**A-**1**C are schematic, cross-sectional views of optical devices **100**A, **1008**, **100**C. It is to be understood that the optical devices **100**A, **1008**, **100**C described herein are exemplary optical devices. The substrate **101** may be formed from any suitable material, provided that the substrate **101** can adequately transmit light in a desired wavelength or wavelength range and can serve as an adequate support for the optical devices **100**A, **100**B, **100**C described herein. The material of the substrate **101** has a refractive index that is lower than the refractive index of a plurality of optical device structures **102**. Substrate selection may include substrates of any suitable material, including, but not limited to, amorphous dielectrics, non-amorphous dielectrics, crystalline dielectrics, silicon-containing materials, polymers, and combinations thereof. In one embodiment, which can be combined with other embodiments described herein, the substrate **101** consists of one or more of silicon (Si), silicon dioxide (SiO_2), silicon carbide (SiC), fused silica, diamond, or quartz materials. In another embodiment, which can be combined with other embodiments described herein, the substrate **101** consists of one or more of nitrogen, titanium, niobium, lanthanum, zirconium, or yttrium containing-materials.

[0020] The optical devices **100**A, **100**B, **100**C are a waveguide combiners, such as augmented reality waveguide combiners. The optical devices **100**A, **100**B, **100**C include at least one grating **104**A, **104**B of a plurality of optical device structures **102** formed from at least one discrete area **110**A, **110**B area of an optical material **106**. The optical material **106** of the optical device **100**A is formed on the substrate **101** according to one of the methods **200** or **300** described herein. The optical material **106** of the optical devices **100**B, **100**C are formed from a device layer **108** according to one of the methods **200** or **300** described herein. The plurality of optical device structures **102** of the optical device **100**B contact an upper surface **105** of the device layer **108**. The plurality of optical device structures **102** of the optical device **100**C contact an upper surface **103** of the substrate **101**. The plurality of optical device structures **102** are nanostructures having sub-micron dimensions, e.g., nano-sized dimensions.

[0021] The device layer **108** includes, but is not limited to, one or more of silicon carbide (SiC), silicon oxycarbide (SiOC), titanium dioxide (TiO_2), silicon dioxide (SiO_2), vanadium (IV) oxide (VOx), aluminum oxide (Al_2O_3), aluminum-doped zinc oxide (AZO), indium tin oxide (ITO), tin dioxide (SnO_2), zinc oxide (ZnO), tantalum pentoxide (Ta_2O_5), silicon nitride (Si_3N_4), zirconium dioxide (ZrO_2), niobium oxide (Nb_2O_5), cadmium stannate (Cd_2SnO_4), silicon mononitride (SiN), silicon oxynitride (SiON), barium titanate ($BaTiO_3$), diamond like carbon (DLC), hafnium (IV) oxide (HfO_2), lithium niobate ($LiNbO_3$), or silicon carbon-nitride (SiCN) containing materials.

[0022] The optical material **106** has one of a refractive index greater than or equal to 2.0, i.e., a high refractive index, or a hardness greater than or equal to 5.5 Mohs. In one example, the optical material **106** has a refractive index of 2.91. In another example, the optical material **106** has a hardness of 7.0 Mohs. The optical material **106** having the high refractive index includes nitrides or carbides of the material of the substrate **101** or the material of the device layer **108**. The optical material **106** having the hardness includes aluminum, potassium, or carbon containing compounds of the material of the substrate **101** or the material of the device layer **108**.

[0023] FIG. **2** is a flow diagram of a method **200** a forming an optical device substrate **101** having at least one discrete area **110** of high refractive index or scratch resistant optical material **106**, as shown in FIGS. **4**A-**4**E. FIGS. **4**A-**4**E are schematic, cross-sectional views of a substrate **101**. While aspects of method **200** for forming the discrete area **110** of the optical material **106** in the substrate **101** are discussed, it is to be understood that the discrete area **110** of the optical material **106** in the device layer **108** of the substrate **101** is formed according to method **200** described herein.

[0024] At operation **201**, as shown in FIG. **4**A, an etch material **401** (e.g., etchant) is disposed on a discrete area **110** of the substrate **101** or the device layer **108**. The device layer **108** is disposed on the substrate by chemical vapor deposition, spin on coating, inkjet printing, or physical vapor deposition. While FIGS. **4**A-**4**C depict the upper surface **103** of the substrate **101**, as described herein the method **200** is applicable to the upper surface **105** of the device layer **108**. The etch material **401** may be dispensed on the upper surface **103** or the upper surface **105** of the device layer **108** of the discrete area **110** via inkjet dispensing. In one example, the etch material **401** includes at least one of ammonium hydrogen fluoride (NH_4HF_2) or hydrogen chloride (HCl). In another example, the etch material **401** includes at least one of ammonium hydroxide (NH_4OH) or hydrogen peroxide (H_2O_2). As shown in FIG. **4**B, the etch material **401** forms a depth **402** and porosities in the discrete area **110**. At operation **202**, as shown in FIG. **4**C, a diffusion material **403** is disposed in the depth **402** of the discrete area **110**. The diffusion material **403** may be dispensed on the upper surface **103** or the upper surface **105** of the device layer **108** of the discrete area **110** via inkjet dispensing. The diffusion material **403** includes nitrogen, carbon, aluminum, or potassium containing materials. Ions **405** of the diffusion material **403** diffuse into the porosities of the substrate **101** or the device layer **108** and bond with the substrate **101** or the device layer **108** to form the optical material **106**.

[0025] The optical material **106** of the embodiments of FIG. **4**D formed from the method **200**, includes, one or more of Si, SiO_2, SiC, fused silica, quartz, nitrogen, titanium, niobium, lanthanum, zirconium, or yttrium containing-materials with nitrogen, carbon, aluminum, or potassium containing materials disposed in the porosities of the substrate **101**. The optical material **106** of the embodiments of FIG. **4**E formed from the method **200**, includes, one or more of SiC, SiOC, TiO_2, SiO_2, VOx, Al_2O_3, AZO, ITO, SnO_2, ZnO, Ta_2O_5, Si_3N_4, ZrO_2, Nb_2O_5, Cd_2SnO_4, SiN, SiON, $BaTiO_3$, DLC, HfO_2, $LiNbO_3$, or SiCN containing materials with nitrogen, carbon, aluminum, or potassium containing materials disposed in the porosities of the optical material **106**.

[0026] At operation **203**, as shown in FIGS. **4**D and **4**E, excess diffusion material **403** is removed such that the substrate **101** is planar. The excess diffusion material **403** may be removed by polishing. The discrete area **110** corre-

sponds to one of the discrete area **110**B of the optical device **100**A, **1100**B, and **100**C. The method may be repeated to form the discrete area **110**A of the optical material **106**. The substrate **101** formed by the method **200** may be etched to form a plurality of optical device structures **102**.

[0027] FIG. **3** is a flow diagram of a method **300** for forming an optical device substrate **101** having at least one discrete area **110** of high refractive index or scratch resistant optical material **106**, as shown in FIGS. **4**C-**4**E. While aspects of method **300** for forming the discrete area **110** of the optical material **106** in the substrate **101** are discussed, it is to be understood that the discrete area **110** of the optical material **106** in the device layer **108** of the substrate **101** is formed according to method **300** described herein. While FIG. **4**C depicts the upper surface **103** of the substrate **101**, as described herein the method **300** is applicable to the upper surface **105** of the device layer **108**.

[0028] At operation **301**, as shown in FIG. **4**C, one of an ion implantation process or a laser doping process is performed on a discrete area **110** of the substrate **101** or the device layer **108**. In the ion implantation process, the diffusion material **403**, i.e., ions of an implantation gas are accelerated to the substrate **101** or the device layer **108**. The ions **405** of the implantation gas diffuse into the substrate **101** or the device layer **108** and bond with the substrate **101** or the device layer **108** to form the optical material **106**. The implantation forms an optical material **106** of ZnO, ZrO_2, or TiO_2. In the laser doping process ions of a heat spot are generated on the discrete area **110**. The ions **405** of a reactive gas bond with the substrate **101** or the device layer **108** to form the optical material **106**. The reactive gas includes carbon or nitrogen. The reactive gas including nitrogen forms an optical material **106** of SiON or SiN. The reactive gas including nitrogen forms an optical material **106** of SiC.

[0029] At operation **302**, as shown in FIGS. **4**D and **4**E, excess diffusion material **403** is removed such that the substrate **101** is planar. The excess diffusion material **403** may be removed by polishing. The discrete area **110** corresponds to one of the discrete area **1108** of the optical devices **100**A, **11008**, and **100**C. The method may be repeated to form the discrete area **110**A of the optical material **106**. The substrate **101** formed by the method **300** may be etched to form a plurality of optical device structures **102**.

[0030] The optical material **106** has one of a refractive index greater than or equal to 2.0, i.e., a high refractive index, or a hardness greater than or equal to 5.5 Mohs. The optical material **106** with the refractive index greater than or equal to 2.0 includes TiO_2, Ta_2O_5, Si_3N_4, Nb_2O_5, SiN, SiC, HfO_2, or $LiNbO_3$ containing materials with nitrogen, carbon, aluminum, or potassium containing materials disposed in the porosities of the optical material **106**. The optical material **106** a hardness of 7.0 Mohs includes diamond or SiC. After one of the method **200** for the method **300** for forming the optical device substrate **101** having at least one discrete area **110** of high refractive index or scratch resistant optical material **106**, the at least one discrete area **110** is etched to form the plurality of optical device structures **102** as shown and described in FIGS. **1**A-**1**C.

[0031] In summation, methods for forming an optical device substrate having at least one discrete area of high refractive index or scratch resistant material are described herein. While the foregoing is directed to examples of the present disclosure, other and further examples of the disclosure may be devised without departing from the basic scope thereof, and the scope thereof is determined by the claims that follow.

What is claimed is:

1. A method, comprising:

performing an implantation process on a discrete area of an optical device substrate or an optical device layer, wherein ions of an implantation gas diffuse into the optical device substrate or the optical device layer and bond with the optical device substrate or the optical device layer to form an optical material; and

removing excess implanted material, the optical device substrate or the optical device layer having a refractive index greater than or equal to 2.0 or a hardness greater than or equal to 5.5 Mohs.

2. The method of claim **1**, wherein the optical device substrate consists of one or more of silicon (Si), silicon carbide (SiC), silicon dioxide (SiO_2), fused silica, diamond, or quartz materials.

3. The method of claim **2**, wherein the optical material comprises nitrides or carbides of the material of the optical device substrate or the optical device layer.

4. The method of claim **2**, wherein the optical material comprises aluminum, potassium, or carbon containing compounds of the material of the optical device substrate or the optical device layer.

5. The method of claim **1**, wherein the optical device substrate consists of one or more of nitrogen, titanium, niobium, lanthanum, zirconium, or yttrium containing-materials.

6. The method of claim **1**, wherein the optical material includes titanium dioxide (TiO_2), zinc oxide (ZnO), or zirconium dioxide (ZrO_2).

7. The method of claim **1**, the optical device layer comprises one or more of silicon carbide (SiC), silicon oxycarbide (SiOC), titanium dioxide (TiO_2), silicon dioxide (SiO_2), vanadium (IV) oxide (VOx), aluminum oxide (Al_2O_3), aluminum-doped zinc oxide (AZO), indium tin oxide (ITO), tin dioxide (SnO_2), zinc oxide (ZnO), tantalum pentoxide (Ta_2O_5), silicon nitride (Si_3N_4), zirconium dioxide (ZrO_2), niobium oxide (Nb_2O_5), cadmium stannate (Cd_2SnO_4), silicon mononitride (SiN), silicon oxynitride (SiON), barium titanate ($BaTiO_3$), diamond like carbon (DLC), hafnium (IV) oxide (HfO_2), lithium niobate ($LiNbO_3$), or silicon carbon-nitride (SiCN) containing materials.

8. A method, comprising:

performing an implantation process on a discrete area of an optical device substrate or an optical device layer, wherein ions of an implantation gas diffuse into the optical device substrate or the optical device layer and bond with the optical device substrate or the optical device layer to form an optical material, the optical device substrate consists of one or more of silicon (Si), silicon carbide (SiC), silicon dioxide (SiO_2), fused silica, diamond, or quartz materials; and

removing excess implanted material, the optical device substrate or the optical device layer having a refractive index greater than or equal to 2.0 or a hardness greater than or equal to 5.5 Mohs.

9. The method of claim **8**, wherein the optical material comprises nitrides or carbides of the material of the optical device substrate or the optical device layer.

10. The method of claim **8**, wherein the optical material comprises aluminum, potassium, or carbon containing compounds of the material of the optical device substrate or the optical device layer.

11. The method of claim **8**, wherein the optical material includes titanium dioxide (TiO_2), zinc oxide (ZnO), or zirconium dioxide (ZrO_2).

12. The method of claim **8**, the optical device layer comprises one or more of silicon carbide (SiC), silicon oxycarbide (SiOC), titanium dioxide (TiO_2), silicon dioxide (SiO_2), vanadium (IV) oxide (VOx), aluminum oxide (Al_2O_3), aluminum-doped zinc oxide (AZO), indium tin oxide (ITO), tin dioxide (SnO_2), zinc oxide (ZnO), tantalum pentoxide (Ta_2O_5), silicon nitride (Si_3N_4), zirconium dioxide (ZrO_2), niobium oxide (Nb_2O_5), cadmium stannate (Cd_2SnO_4), silicon mononitride (SiN), silicon oxynitride (SiON), barium titanate ($BaTiO_3$), diamond like carbon (DLC), hafnium (IV) oxide (HfO_2), lithium niobate ($LiNbO_3$), or silicon carbon-nitride (SiCN) containing materials.

13. A method, comprising:

performing a laser doping process on a discrete area of an optical device substrate or an optical device layer, wherein ions of a reactive gas diffuse into the optical device substrate or the optical device layer and bond with the optical device substrate or the optical device layer to form an optical material; and

removing excess doped material, the optical device substrate or the optical device layer having a refractive index greater than or equal to 2.0 or a hardness greater than or equal to 5.5 Mohs.

14. The method of claim **13**, wherein the optical device substrate consists of one or more of silicon (Si), silicon carbide (SiC), silicon dioxide (SiO_2), fused silica, diamond, or quartz materials.

15. The method of claim **13**, wherein the optical material comprises nitrides or carbides of the material of the optical device substrate or the optical device layer.

16. The method of claim **13**, wherein the optical device substrate consists of one or more of nitrogen, titanium, niobium, lanthanum, zirconium, or yttrium containing-materials.

17. The method of claim **13**, wherein the doped material includes carbon or nitrogen.

18. The method of claim **13**, wherein the optical material comprises aluminum, potassium, or carbon containing compounds of the material of the optical device substrate or the optical device layer.

19. The method of claim **13**, wherein the optical material includes titanium dioxide (TiO_2), zinc oxide (ZnO), or zirconium dioxide (ZrO_2).

20. The method of claim **13**, the optical device layer comprises one or more of silicon carbide (SiC), silicon oxycarbide (SiOC), titanium dioxide (TiO_2), silicon dioxide (SiO_2), vanadium (IV) oxide (VOx), aluminum oxide (Al_2O_3), aluminum-doped zinc oxide (AZO), indium tin oxide (ITO), tin dioxide (SnO_2), zinc oxide (ZnO), tantalum pentoxide (Ta_2O_5), silicon nitride (Si_3N_4), zirconium dioxide (ZrO_2), niobium oxide (Nb_2O_5), cadmium stannate (Cd_2SnO_4), silicon mononitride (SiN), silicon oxynitride (SiON), barium titanate ($BaTiO_3$), diamond like carbon (DLC), hafnium (IV) oxide (HfO_2), lithium niobate ($LiNbO_3$), or silicon carbon-nitride (SiCN) containing materials.

* * * * *