US 20240126012A1

(19) **United States**

(12) **Patent Application Publication**

LUO et al.

(10) **Pub. No.: US 2024/0126012 A1**

(43) **Pub. Date: Apr. 18, 2024**

(54) TOTAL OR LOCAL THICKNESS VARIATION FOR OPTICAL DEVICES

(71) Applicant: **Applied Materials, Inc.**, Santa Clara, CA (US)

(72) Inventors: **Yingdong LUO**, Newark, CA (US); **Zhengping YAO**, Cupertino, CA (US); **Daihua ZHANG**, Los Altos, CA (US); **David Alexander SELL**, Santa Clara, CA (US); **Jingyi YANG**, Santa Clara, CA (US); **Xiaopei DENG**, San Jose, CA (US); **Kevin MESSER**, Mountain View, CA (US); **Samarth BHARGAVA**, Saratoga, CA (US); **Rami HOURANI**, Santa Clara, CA (US); **Ludovic GODET**, Sunnyvale, CA (US)

(21) Appl. No.: **18/381,604**

(22) Filed: **Oct. 18, 2023**

Related U.S. Application Data

(60) Provisional application No. 63/380,003, filed on Oct. 18, 2022.

Publication Classification

(51) **Int. Cl.**

G02B 6/122	(2006.01)
G02B 6/12	(2006.01)
G02B 6/124	(2006.01)
G02B 6/13	(2006.01)
G02B 27/00	(2006.01)

(52) **U.S. Cl.**

CPC ***G02B 6/1228*** (2013.01); ***G02B 6/12004*** (2013.01); ***G02B 6/124*** (2013.01); ***G02B 6/13*** (2013.01); ***G02B 27/0081*** (2013.01)

(57) **ABSTRACT**

Embodiments of the present disclosure generally relate to methods for forming a waveguide. Methods may include measuring a waveguide substrate, the waveguide having a substrate thickness distribution; and depositing an index-matched layer onto a surface of the waveguide, the index-matched layer having a first surface disposed on the waveguide substrate and a second surface opposing the first surface, wherein the index-matched layer is disposed only over a portion of the waveguide substrate, and a device slope of a second surface of the index-matched layer is substantially the same as the waveguide slope of the first surface of the waveguide.

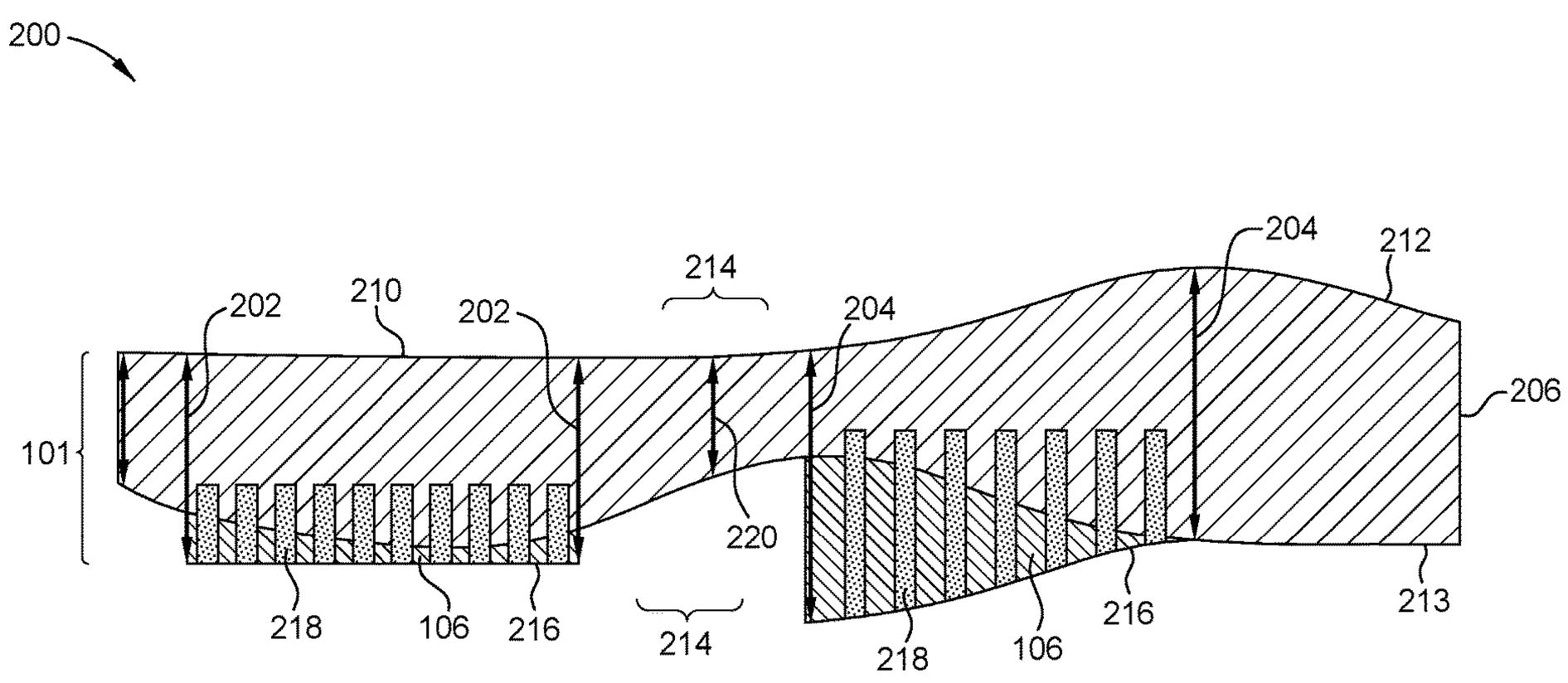

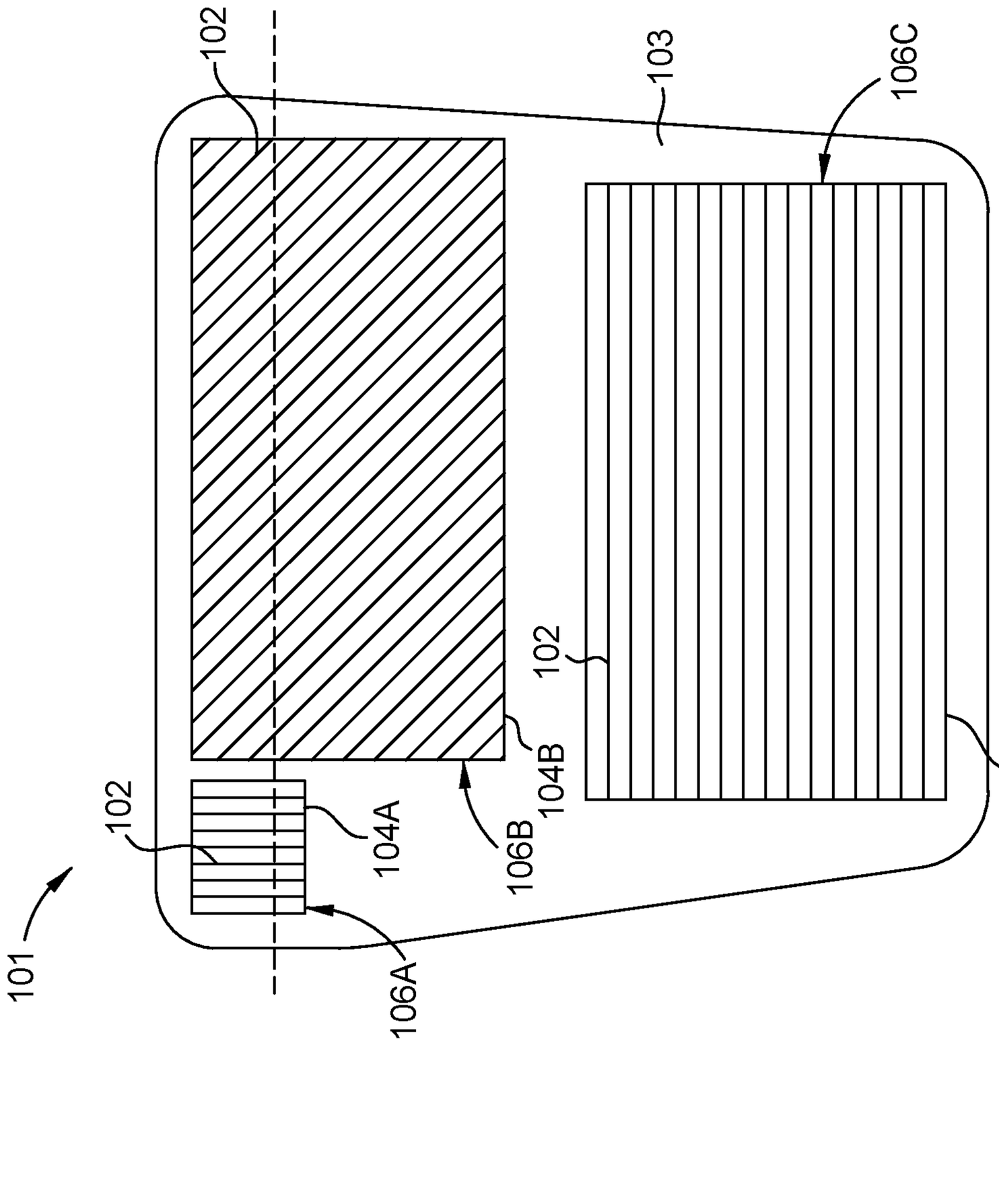

FIG. 1B

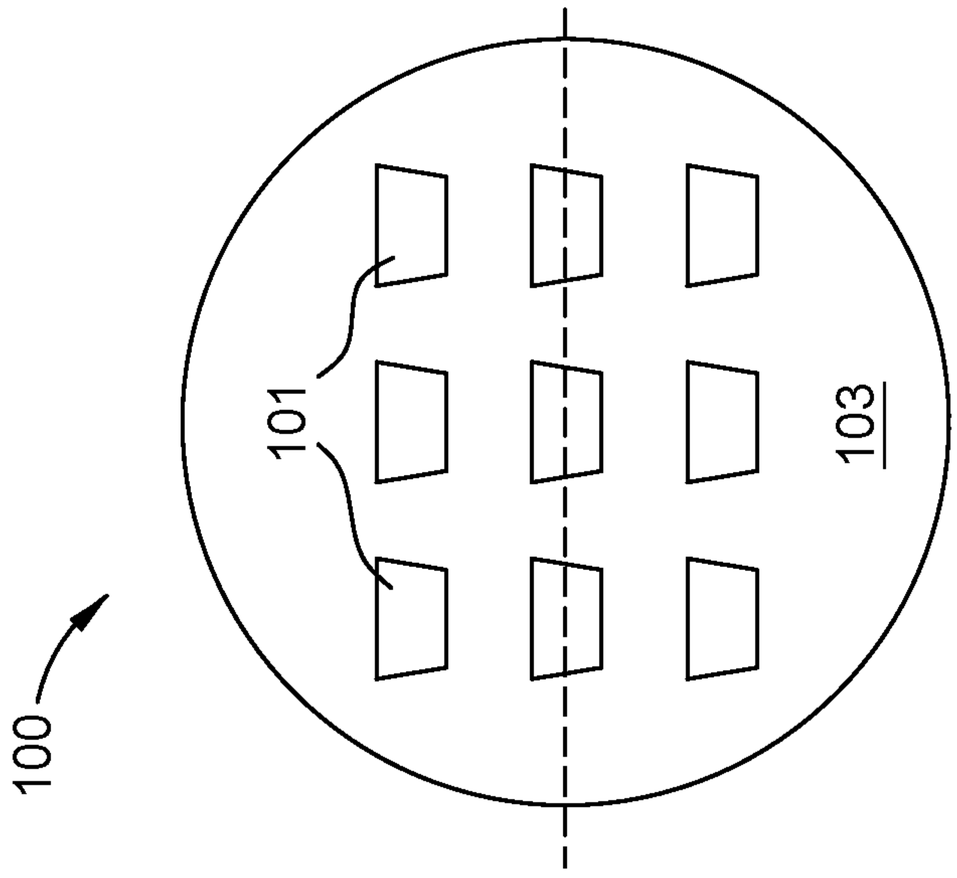

FIG. 1A

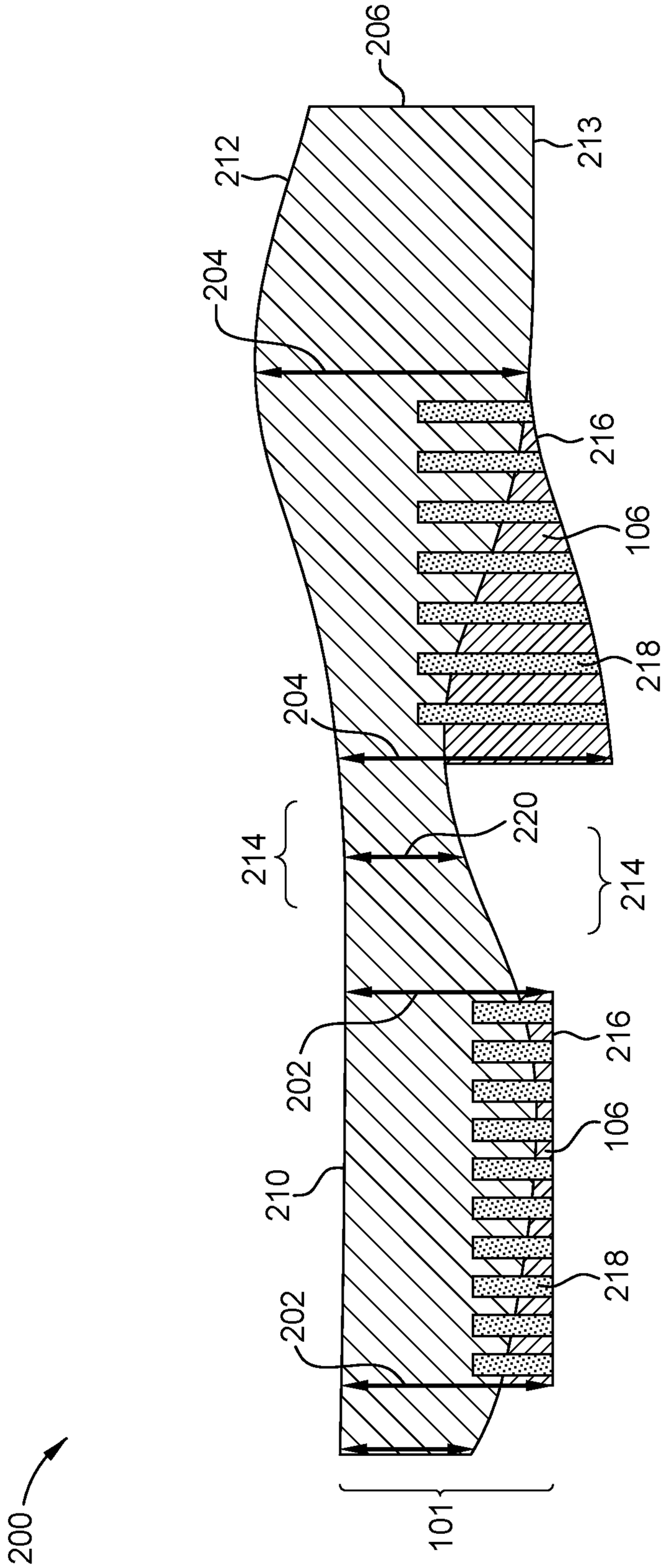
206
212
213
204
216
106
218
204
214
220
214
216
202
106
210
218
202
200
101

FIG. 2A

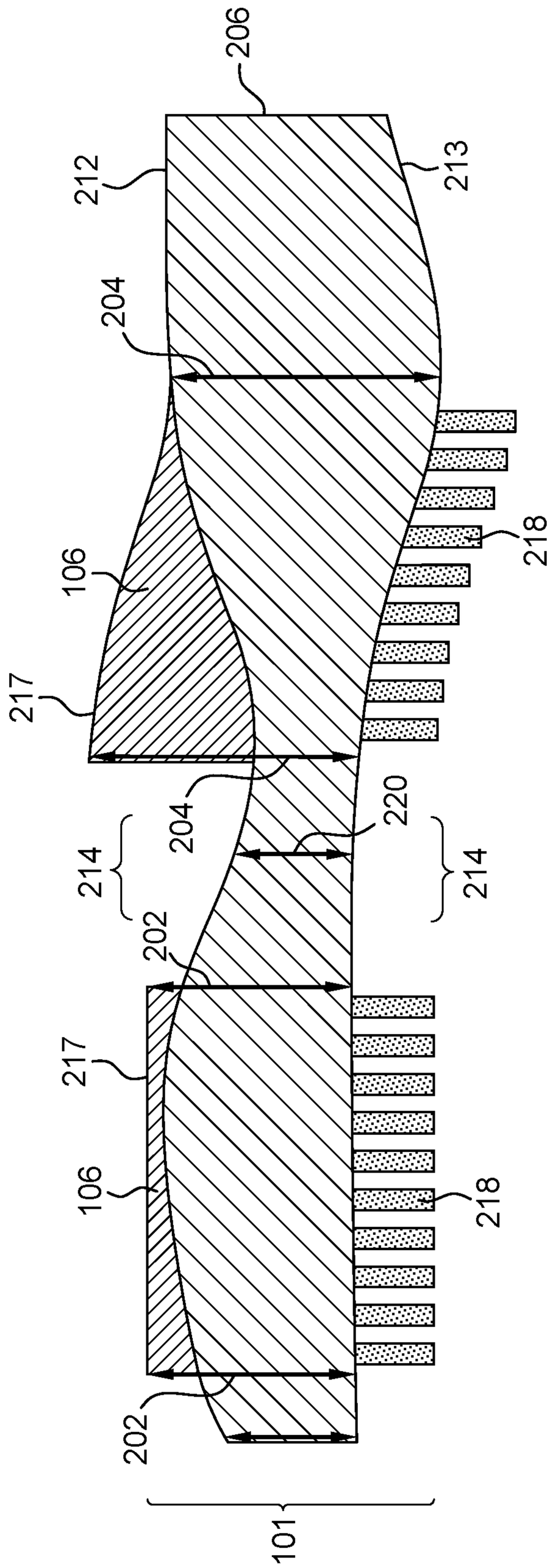
206
212
213
204
218
106
217
204
220
214
214
202
217
106
218
202
200
101

FIG. 2B

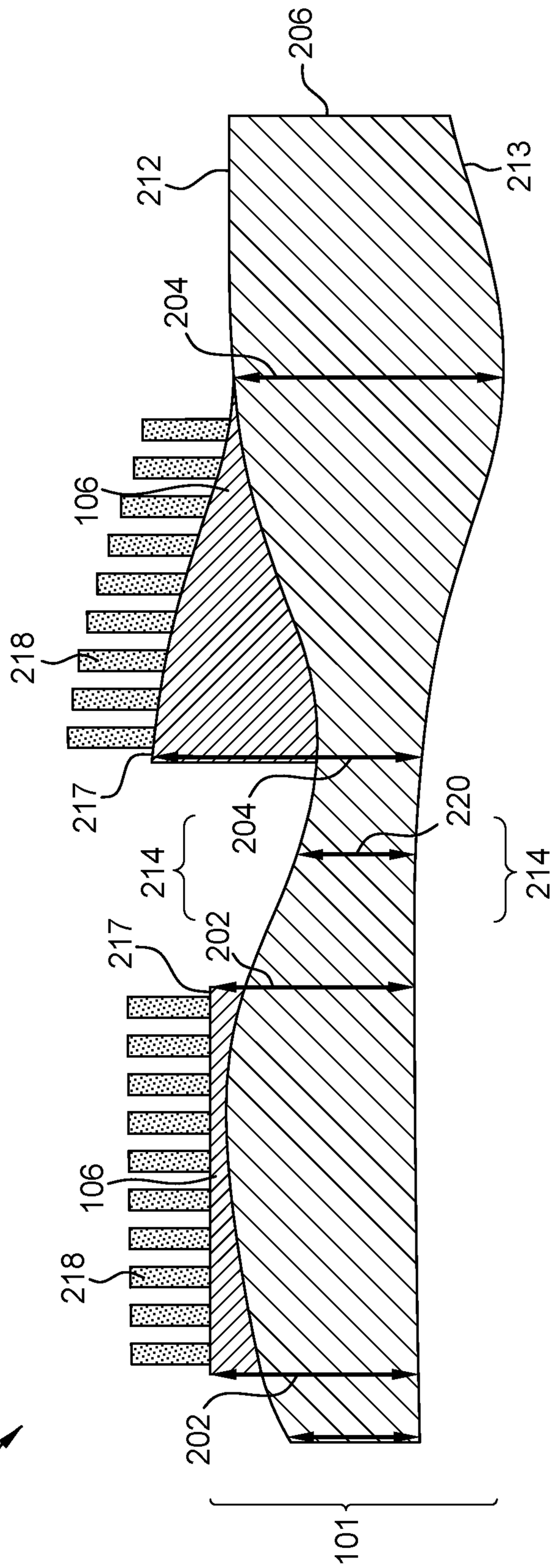
206
212
213
204
106
218
217
204
220
214
214
217
202
106
218
202
200
101

FIG. 2C

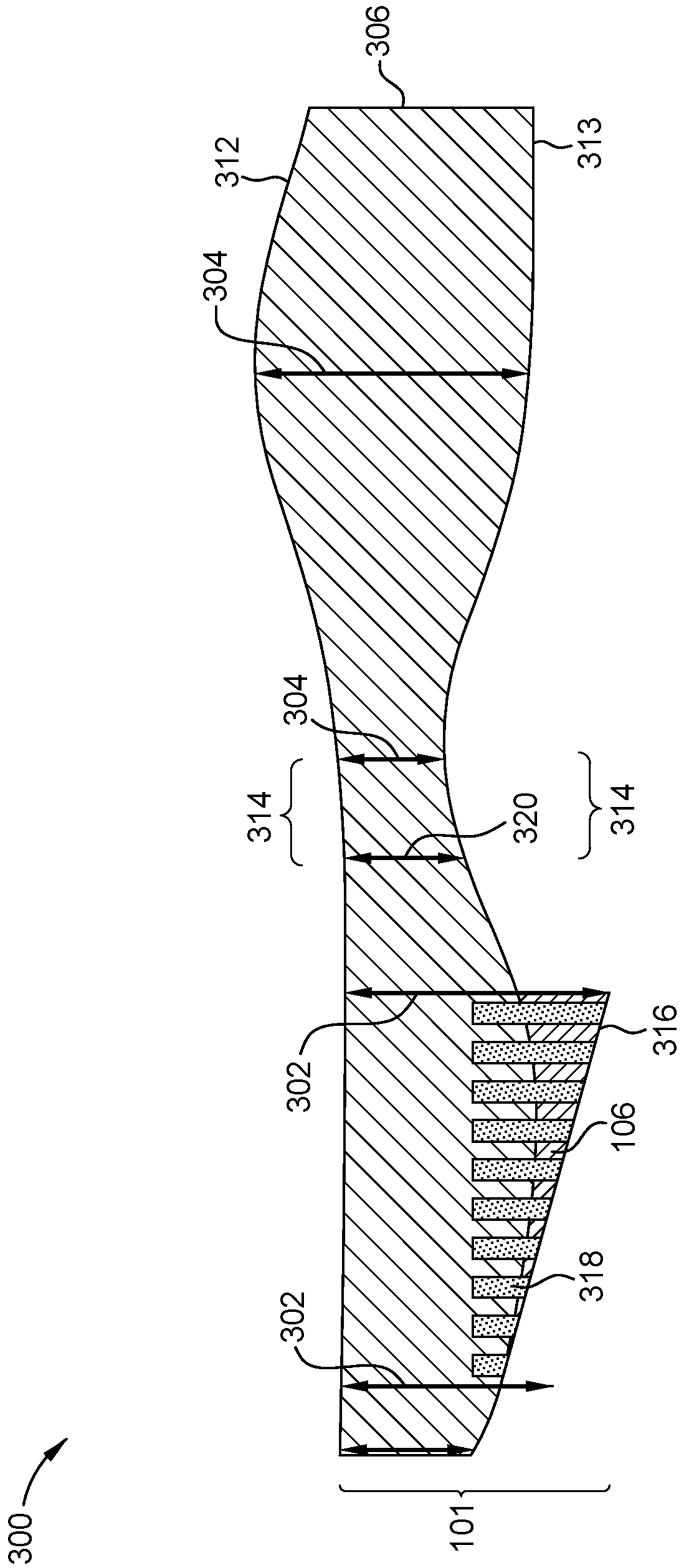

FIG. 3A

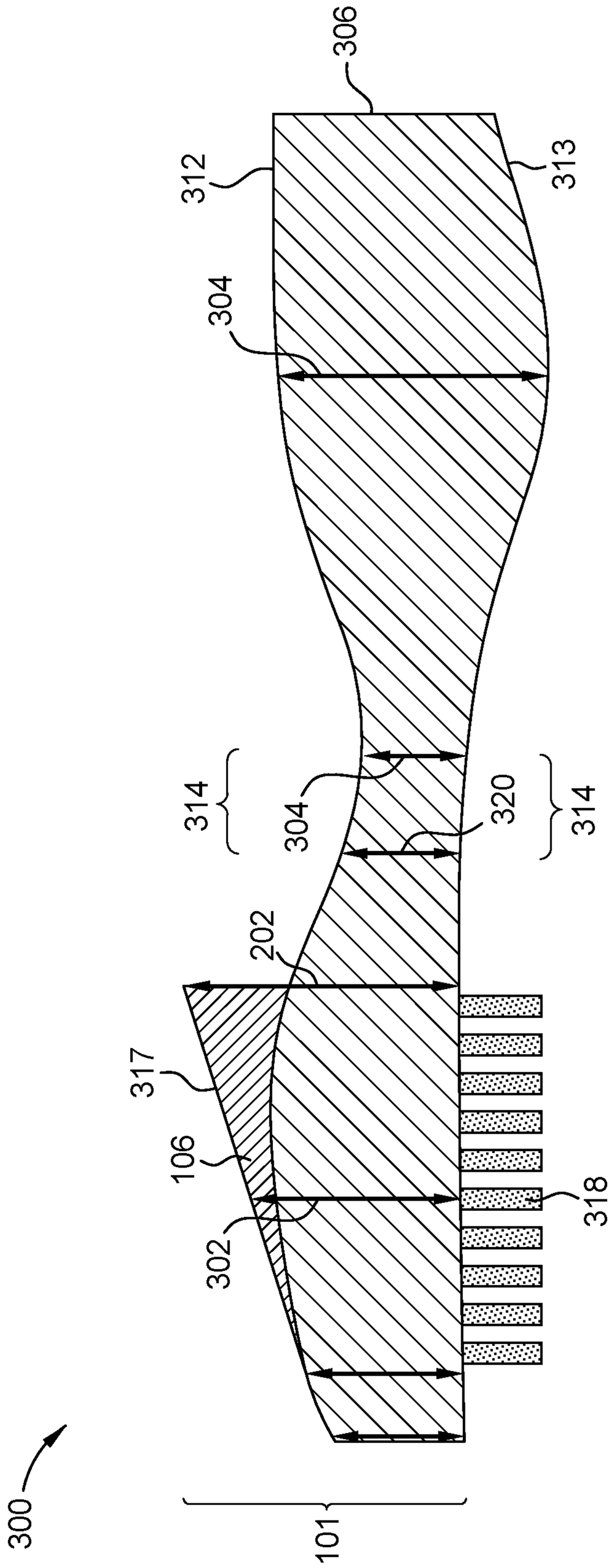

FIG. 3B

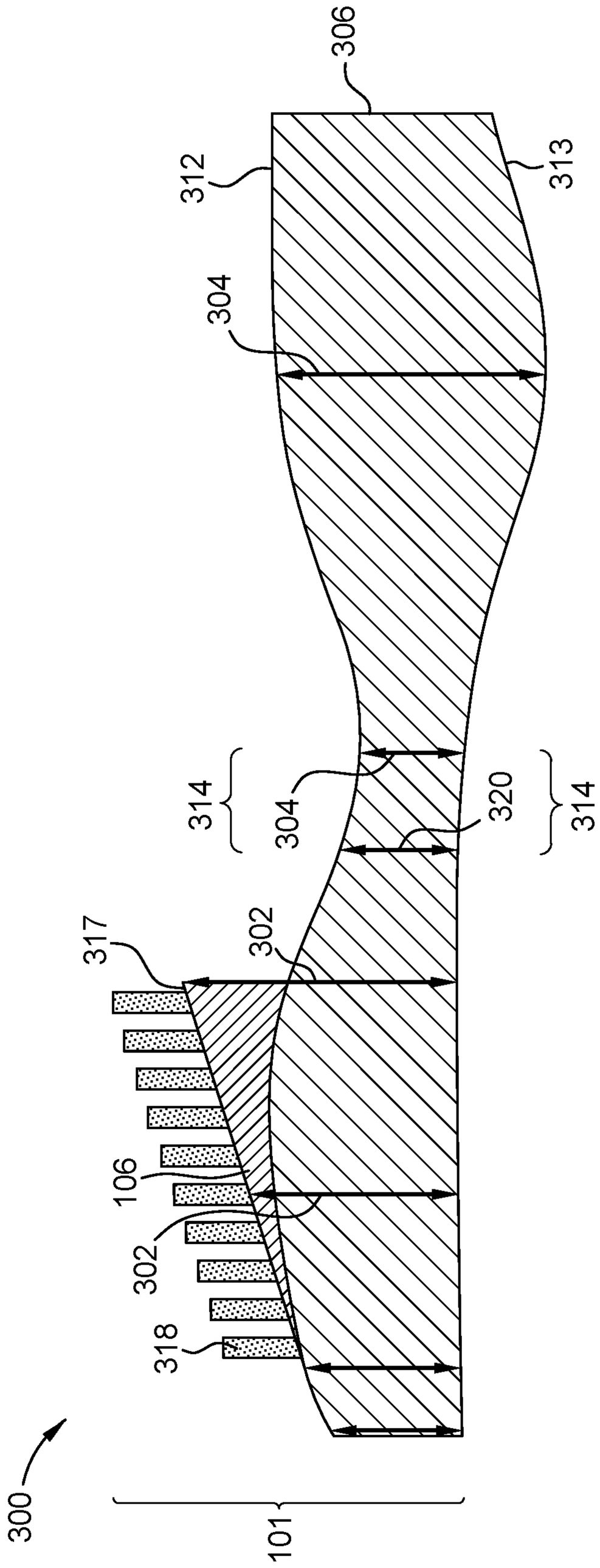

FIG. 3C

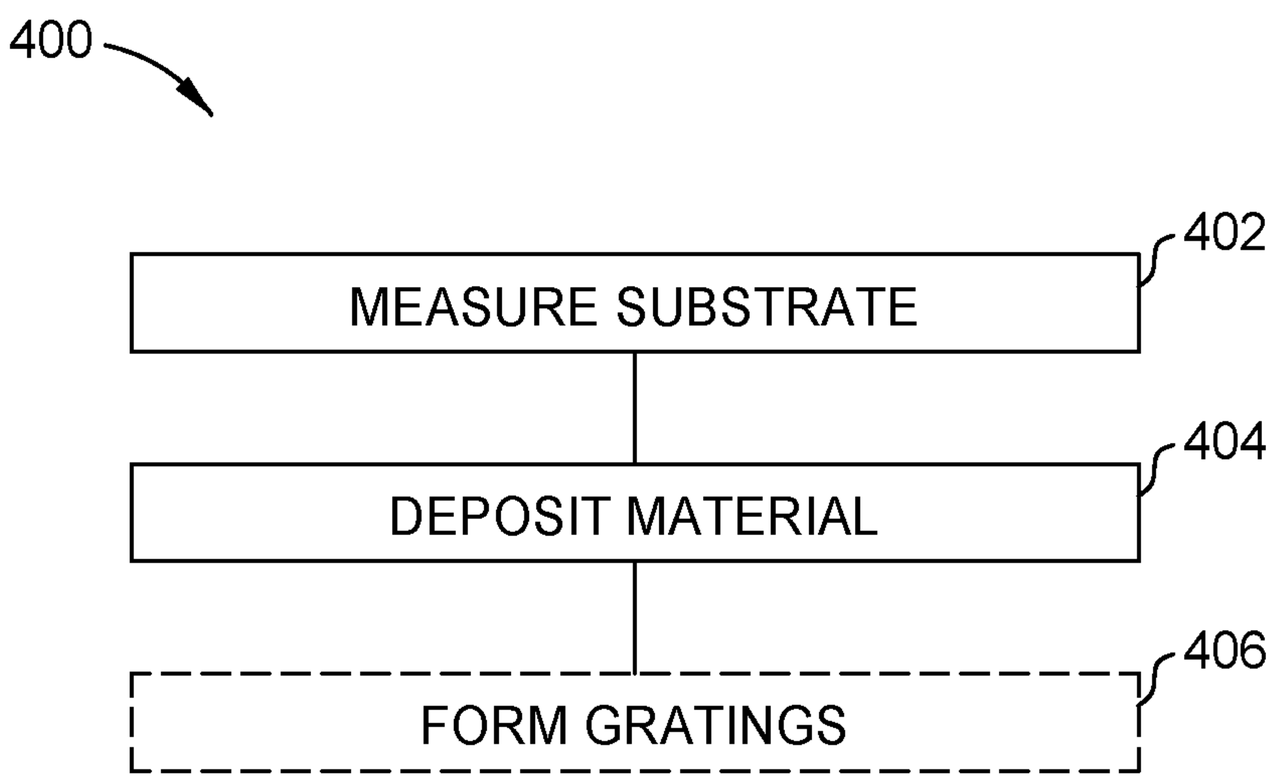
400
402
MEASURE SUBSTRATE
404
DEPOSIT MATERIAL
406
FORM GRATINGS

FIG. 4

TOTAL OR LOCAL THICKNESS VARIATION FOR OPTICAL DEVICES

CROSS-REFERENCE TO RELATED APPLICATIONS

[0001] This application claims benefit of U.S. provisional patent application Ser. No. 63/380,003, filed Oct. 18, 2022, which is herein incorporated by reference

BACKGROUND

Field

[0002] Embodiments of the present disclosure generally relate to substrates. More specifically, embodiments described herein provide for forming a substrate having a thickness distribution at one or more eyepiece areas across a substrate.

Description of the Related Art

[0003] Virtual reality is generally considered to be a computer generated simulated environment in which a user has an apparent physical presence. A virtual reality experience can be generated in 3D and viewed with a head-mounted display (HMD), such as glasses or other wearable display devices that have near-eye display panels as substrate eyepieces to display a virtual reality environment that replaces an actual environment.

[0004] Augmented reality, however, enables an experience in which a user can still see through the substrate eyepieces of the glasses or other HMD device to view the surrounding environment, yet also see images of virtual objects that are generated for display and appear as part of the environment. Augmented reality can include any type of input, such as audio and haptic inputs, as well as virtual images, graphics, and video that enhances or augments the environment that the user experiences. As an emerging technology, there are many challenges and design constraints with augmented reality.

[0005] Accordingly, what is needed in the art are methods for forming a substrate having a thickness distribution at one or more eyepiece areas across a substrate.

SUMMARY

[0006] A waveguide is shown and described herein. The waveguide may include a waveguide substrate, the waveguide having a substrate thickness distribution, and an index-matched layer having a first surface disposed on the waveguide substrate and a second surface opposing the first surface, wherein: the index-matched layer is disposed over a portion of the waveguide substrate; and a device slope of a second surface of the index-matched layer is substantially the same as the waveguide slope of the first surface of the waveguide.

[0007] A waveguide is shown and described herein. The waveguide may include a waveguide substrate, the waveguide having a substrate thickness distribution; and an index-matched layer having a first surface disposed on the waveguide substrate and a second surface opposing the first surface, wherein: the index-matched layer is disposed over a portion of the waveguide substrate, and a device slope of a second surface of the index-matched layer has a slope value configured to vary the substrate thickness distribution across the index-matched layer.

[0008] A method for forming a waveguide is shown and described herein. The method may include measuring a waveguide substrate, the waveguide having a substrate thickness distribution, and depositing an index-matched layer onto a surface of the waveguide, the index-matched layer having a first surface disposed on the waveguide substrate and a second surface opposing the first surface, wherein the index-matched layer is disposed only over a portion of the waveguide substrate, and a device slope of a second surface of the index-matched layer is substantially the same as the waveguide slope of the first surface of the waveguide.

BRIEF DESCRIPTION OF THE DRAWINGS

[0009] So that the manner in which the above recited features of the present disclosure can be understood in detail, a more particular description of the disclosure, briefly summarized above, may be had by reference to embodiments, some of which are illustrated in the appended drawings. It is to be noted, however, that the appended drawings illustrate only exemplary embodiments and are therefore not to be considered limiting of its scope, and may admit to other equally effective embodiments.

[0010] FIGS. **1**A and **1**B are schematic, top views of a substrate according to embodiments.

[0011] FIGS. **2**A through **3**C are schematic, cross-sectional views of a substrate having a substrate thickness distribution.

[0012] FIG. **4** is a flow diagram of a method for forming a waveguide.

[0013] To facilitate understanding, identical reference numerals have been used, where possible, to designate identical elements that are common to the figures. It is contemplated that elements and features of one embodiment may be beneficially incorporated in other embodiments without further recitation.

DETAILED DESCRIPTION

[0014] Embodiments described herein relate to methods for forming a substrate having a thickness distribution at one or more eyepiece areas across a substrate. Please see appendix attached.

[0015] FIG. **1**A is a schematic, top view of a substrate **100** according to embodiments described herein. The substrate **100** includes a plurality of waveguides **101**. The waveguides **101** are areas over the substrate **100** where a waveguide **101** is to be formed. In some cases, the waveguides **101** may be an substrate eyepiece. Although only nine of the waveguide areas **101** are shown in FIG. **1**A, the substrate **100** is not limited in the number of the waveguides **101** to be formed thereon. FIG. **1**B is a perspective, frontal view of a substrate **100**. It is to be understood that the substrate **100** described herein are exemplary substrates and the other substrates may be used with or modified to accomplish aspects of the present disclosure.

[0016] The substrate **100** includes a plurality of substrate structures **102** disposed on a surface **103** of a waveguide **101**. The substrate structures **102** may be nanostructures having sub-micron dimensions, e.g., nano-sized dimensions. Regions of the substrate structures **102** correspond to one or more gratings **104** having one or more index-matched layers **106**, such as a first grating **104***a*, a second grating **104***b*, and a third grating **104***c*. In one embodiment, which can be

combined with other embodiments described herein, the substrate **100** includes at least the first grating **104***a* corresponding to an input coupling grating including an index-matched layer **106**A and the third grating **104***c* corresponding to an output coupling grating including an index-matched layer **106**B. In one embodiment, which can be combined with other embodiments described herein, the substrate **100** also includes the second grating **104***b* corresponding to an intermediate grating including an index-matched layer **106**B. The substrate structures **102** may be angled or binary. The substrate structures **102** may have other shapes including, but not limited to, circular, triangular, elliptical, regular polygonal, irregular polygonal, and/or irregular shaped cross-sections.

[0017] In operation, the input coupling grating receives incident beams of light (a virtual image) having an intensity from a microdisplay. The incident beams are split by the substrate structures **102** into T**1** beams that have all of the intensity of the incident beams in order to direct the virtual image to the intermediate grating (if utilized) or the output coupling grating. In one embodiment, which can be combined with other embodiments described herein, the T**1** beams undergo total-internal-reflection (TIR) through the substrate **100** until the T**1** beams come in contact with the substrate structures **102** of the intermediate grating. The substrate structures **102** of the intermediate grating diffract the T**1** beams to T−1 beams that undergo TIR through the substrate **100** to the substrate structures **102** of the output coupling grating. The substrate structures **102** of the output coupling grating outcouple the T−1 beams to the user's eye to modulate the field of view of the virtual image produced from the microdisplay from the user's perspective and further increase the viewing angle from which the user can view the virtual image. In another embodiment, which can be combined with other embodiments described herein, the T**1** beams undergo total-internal-reflection (TIR) through the substrate **100** until the T**1** beams come in contact with the substrate structures **102** of the output coupling grating and are outcoupled to modulate the field of view of the virtual image produced from the microdisplay.

[0018] FIGS. **2**A, **2**B, and **2**C are schematic, cross-sectional views of a substrate **200** having a first substrate thickness distribution **202** and a second substrate thickness distribution **204**. The substrate **200** includes the waveguide **101** of FIG. **1** disposed across the substrate **200**. Inactive areas **214** are disposed between the index-matched layers **106**. The inactive areas **214** are areas of the substrate **200** that will not have one of the index-matched layers **106** formed thereon. The substrate **200** includes a base substrate **206** having a top surface **212** and a bottom surface **213**.

[0019] The base substrate **206** may be formed from any suitable material, provided that the substrate **200** can adequately transmit light in a desired wavelength or wavelength range and can serve as an adequate support for the index-matched layers **106**. The base substrate may be a material including, but not limited to, amorphous dielectrics, non-amorphous dielectrics, crystalline dielectrics, silicon oxide, polymers, and combinations thereof. In some embodiments, which may be combined with other embodiments described herein, the base substrate **206** includes a transparent material. In one example, the base substrate **206** and/or the index matched layer **208** includes silicon (Si), silicon dioxide (SiO_2), fused silica, quartz, silicon carbide (SiC), germanium (Ge), silicon germanium (SiGe), indium phosphide (InP), gallium arsenide (GaAs), gallium nitride (GaN), sapphire, or combinations thereof.

[0020] At least the index-matched layers **106** of the substrate **200** include one of the first target thickness distribution **202** or the second target thickness distribution **204**. The first target thickness distribution **202** and the second target thickness distribution **204** are the local thickness distributions that have been determined to be replicated at each of the waveguides **101**. The first target thickness distribution **202** and the second target thickness distribution **204** are defined by the distance between the top surface **212** and the bottom surface **213** of the substrate **200** across the waveguide **101**. In FIG. **2**A, the first target thickness distribution **202** and the second target thickness distribution **204** are determined by a device slope of the top surface **212** of the substrate, which is substantially the same as a waveguide slope of the bottom surface **213**. The device slope may be achieved by depositing index-matched layers **106** on at least a portion of the bottom surface **213**. In FIGS. **2**B and **2**C, the first target thickness distribution **202** and the second target thickness distribution **204** are determined by a device slope of the bottom surface **213** of the substrate, which is substantially the same as a waveguide slope of the top surface **212**. The device slope may be achieved by depositing index-matched layers **106** on at least a portion of the top surface **212**.

[0021] In FIG. **2**A, the device slope is the slope of the bottom surface **216** of the index-matched layers **106** that are deposited to achieve at least one of the first target thickness distribution **202** or the second target thickness distribution **204**. The waveguide slope is the slope of the top surface **212** of the base substrate **206**. To achieve the first target thickness distribution **202** or the second target thickness distribution **204**, the device slope is matched to the waveguide slope of the top surface **212** of the base substrate **206**. Specifically, the device slope at any given point on the bottom surface **216** is matched to the waveguide slope at a point on the top surface **212** that is directly below the given point on the top surface **216**. In FIGS. **2**B and **2**C, the device slope is the slope of the top surface **217** of the index-matched layers **106** that are deposited to achieve at least one of the first target thickness distribution **202** or the second target thickness distribution **204**. The waveguide slope is the slope of the bottom surface **213** of the base substrate **206**. To achieve the first target thickness distribution **202** or the second target thickness distribution **204**, the device slope is matched to the waveguide slope of the bottom surface **213** of the base substrate **206**. Specifically, the device slope at any given point on the top surface **217** is matched to the waveguide slope at a point on the bottom surface **213** that is directly below the given point on the top surface **217**. By matching the device slope of the index-matched layers **106** to the waveguide slope of the base substrate surface disposed directly above or below the index-matched layers **106**, the first target thickness distribution **202** or the second target thickness distribution **204** may be uniformly achieved.

[0022] The inactive areas **214** of the substrate **200** have an inactive thickness distribution **220**, i.e., the inactive thickness distribution **220** does not substantially match the first target thickness distribution **202** or the second target thickness distribution **204**. The inactive thickness distribution **220** is defined by the distance between the top surface **212** and the bottom surface **213** across the inactive area **214** in the inactive areas **214**. The first target thickness distribution

202 and the second target thickness distribution 204 are formed from the base substrate 206 of the substrate 200 at each index-matched layer 106. In FIG. 2A, the first target thickness distribution 202 and the second target thickness distribution 204 are formed from the top surface 212 to the bottom surface 216 of the index-matched layers 106. In FIGS. 2B and 2C, the first target thickness distribution 202 and the second target thickness distribution 204 are formed from the bottom surface 213 to the top surface 217 of the index-matched layers 106.

[0023] The first target thickness distribution 202 and the second target thickness distribution 204 are engineered to improve the performance of the substrate index-matched layers 106 to be formed thereon. The first target thickness distribution 202 and the second target thickness distribution 204 are the same in at least each waveguide 101 of the substrate 200. Methods and devices described herein will provide for the first target thickness distribution 202 and the second target thickness distribution 204 to be achieved in at least each waveguide 101. In one example, matching a device slope to a corresponding wave slope to deposit a given index-matched layer 106 may enable a substantially uniform target thickness distribution. The first target thickness distribution 202 and the second target thickness distribution 204 are not limited to the first target thickness distribution 202 and the second target thickness distribution 204 shown in FIGS. 2A-2C and may be any thickness distribution determined to be suitable and improve the performance of the substrate index-matched layers 106.

[0024] At least the index-matched layers 106 of the substrate 200 may include grating structures 218. In FIG. 2A, at least one grating may be formed where grating structures 218 are in the index-matched layers 106. In FIG. 2B, at least one grating may be formed where grating structures 218 are over a bottom surface 213 of the base substrate 206. In FIG. 2C, at least one grating may be formed where grating structures 218 are disposed over a top surface 217 of the index-matched layers 106. The grating structures 218 may be disposed vertically or diagonally. The grating structures 218 may form at least one grating, which may be a pupil expansion grating, an input coupler grating, an output coupler grating, and the like.

[0025] While FIGS. 2A through 2C depict the base substrate 206 with the distance between the bottom surface 213 and the upper surface 212 of the base substrate 206 changing across the base substrate 206, in other embodiments, which can be combined with other embodiments described herein, the base substrate 206 is planar such that the distance between the bottom surface 213 and the upper surface 212 of the base substrate 206 is constant across the base substrate 206.

[0026] FIGS. 3A, 3B, and 3C are schematic, cross-sectional views of a substrate 300 having a substrate thickness distribution 302. The substrate 300 includes the waveguide 101 of FIG. 1 disposed across the substrate 300. Inactive areas 314 are disposed between the index-matched layers 106. The inactive areas 314 are areas of the substrate 300 that will not have one of the index-matched layers 106 formed thereon. The substrate 300 includes a base substrate having a top surface 312 and a bottom surface 313.

[0027] The base substrate 306 may be formed from any suitable material, provided that the substrate 300 can adequately transmit light in a desired wavelength or wavelength range and can serve as an adequate support for the index-matched layers 106. The base substrate 306 may be a material including, but not limited to, amorphous dielectrics, non-amorphous dielectrics, crystalline dielectrics, silicon oxide, polymers, and combinations thereof. In some embodiments, which may be combined with other embodiments described herein, the base substrate 306 includes a transparent material. In one example, the base substrate 306 and/or the index matched layer 308 includes silicon (Si), silicon dioxide (SiO_2), fused silica, quartz, silicon carbide (SiC), germanium (Ge), silicon germanium (SiGe), indium phosphide (InP), gallium arsenide (GaAs), gallium nitride (GaN), sapphire, or combinations thereof.

[0028] At least the index-matched layers 106 of the substrate 300 include a target thickness distribution 302. The target thickness distribution 302 is the local thickness distribution that has been determined to be replicated at each of the waveguides 101. The target thickness distribution 302 is defined by the distance between the top surface 312 and the bottom surface 313 of the substrate 300 across the waveguide 101. In FIG. 3A, the target thickness distribution 302 is determined by a device slope of the bottom surface 316 of the index-matched layer 106. The slope may be a pre-configured value, or a value determined based on the target thickness distribution 302. The device slope may be achieved by depositing index-matched layers 106 on at least a portion of the bottom surface 313 of the base substrate 306. In FIG. 3B and FIG. 3C, the target thickness distribution 302 is determined by a device slope of the top surface 317 of the index-matched layer 106. The slope may be a pre-configured value, or a value determined based on the target thickness distribution 302. The device slope may be achieved by depositing index-matched layers 106 on at least a portion of the top surface 312 of the base substrate 306.

[0029] In FIG. 3A, the device slope is the slope of the bottom surface 216 of the index-matched layers 106 that are deposited to achieve at least one of the target thickness distribution 302. To achieve the target thickness distribution 302, the device slope is matched to a desired slope value for that index-matched layer 302. A device slope of a second surface of the index-matched layer has a slope value configured to vary the substrate thickness distribution the index-matched layer. In some embodiments, the device slope at any given point on the bottom surface 316 may be a linear slope value capable of achieving the target thickness distribution 302, such that the target thickness distribution may increase or decrease laterally. In other embodiments, the device slope at any given point on the bottom surface 316 may be non-linear slope value capable of achieving the target thickness distribution 302, such that the target thickness distribution may increase or decrease laterally. In FIG. 3B and FIG. 3C, the device slope is the slope of the top surface 317 of the index-matched layers 106 that are deposited to achieve at least one of the target thickness distribution 302. To achieve the target thickness distribution 302, the device slope is matched to a desired slope value for that index-matched layer 302. Specifically, the device slope at any given point on the top surface 317 may be a linear slope value or non-linear slope value capable of achieving the target thickness distribution 302, such that the target thickness distribution may increase or decrease laterally. By defining the device slope as a target slop value, the target thickness distribution 302 may be uniformly achieved.

[0030] The inactive areas 314 of the substrate 300 have an inactive thickness distribution 320, i.e., the inactive thick-

ness distribution **320** does not substantially match the target thickness distribution **302**. The inactive thickness distribution **320** is defined by the distance between the top surface **312** and the bottom surface **313** across the inactive area **314** in the inactive areas **314**. The target thickness distribution **302** is formed from the base substrate **306** of the substrate **300** at each index-matched layer **106**. In FIG. **3**A, the target thickness distribution **302** is formed from the top surface **312** to the bottom surface **316** of the index-matched layers **106**. In FIG. **3**B and FIG. **3**C, the target thickness distribution **302** is formed from the bottom surface **313** to the top surface **317** of the index-matched layers **106**.

[0031] The target thickness distribution **302** is engineered to improve the performance of the substrate index-matched layers **106** to be formed thereon. The target thickness distribution **302** is the same in at least each waveguide **101** of the substrate **300**. Methods described herein will provide for the first target thickness distribution **302** and the second target thickness distribution **304** to be achieved in at least each waveguide **101**. The first target thickness distribution **302** and the second target thickness distribution **304** are not limited to the first target thickness distribution **302** and the second target thickness distribution **304** shown in FIGS. **3**A and **3**B and may be any thickness distribution determined to be suitable and improve the performance of the substrate index-matched layers **106**.

[0032] At least the index-matched layers **106** of the substrate **300** include grating structures **318** disposed within the index-matched layers. The grating structures **318** may be disposed vertically or diagonally within index-matched layers **106**. In FIG. **3**A, the grating structures **318** may extend from the bottom surface **316** of the index-matched layers **106** to above the bottom surface **313** of the base substrate **306**. The coating layer **308** may be disposed over the surface **316** of the grating structures **318**. In FIG. **3**B, the grating structures **318** may extend from the top surface **310** of the coating layer **308**, though the index-matched layers **106**, to below the top surface **312** of the base substrate **306**. In some cases, the coating layer **308** may optionally be disposed over the surface **317** of the grating structures **318**. The grating structure **318** may be two-dimensional grating, including pupil expansion grating, input coupler grating, output coupler grating, and the like.

[0033] While FIGS. **3**A and **3**B depict the base substrate **306** with the distance between the bottom surface **313** and the upper surface **312** of the base substrate **306** changing across the base substrate **306**, in other embodiments, which can be combined with other embodiments described herein, the base substrate **306** is planar such that the distance between the bottom surface **313** and the upper surface **312** of the base substrate **306** is constant across the base substrate **306**.

[0034] FIG. **4** is a flow diagram of a method **400** for forming a substrate **100**, **200**, and/or **300**, with a target thickness distribution **202**, **203**, or **302** as shown in FIGS. **2**A-**3**C. The method **400** may be utilized to form the target thickness distribution **202**, **203**, and **302** in waveguides **101** and/or inactive areas **203**, **304** (shown in FIGS. **2**A-**3**B) of the substrate **100**, **200**, and **300**.

[0035] At operation **402**, a substrate **100**, **200**, or **300** is measured. In some embodiments, a base substrate thickness distribution of a base substrate **206**, **306** is measured. The base substrate thickness distribution is defined by the distance between the bottom surface **213**, **313** and an upper surface **212**, **312** of the base substrate **206**, **306** across the waveguide **101**. The base substrate thickness distribution is a measured thickness distribution of the base substrate **206**, **306** prior to forming the target thickness distribution **202**, **203**, or **302**.

[0036] At operation **404**, material for the index-matched layers **106** is disposed on the base substrate **206**, **306**. In some embodiments, the target thickness distribution **202**, **203**, or **302** is disposed according to a defined slope in accordance with FIG. **2**A-**3**C. The target thickness distribution **202**, **203**, or **302** is a measured thickness distribution of the base substrate **206**, **306** plus the index-matched layers **106** after to forming the target thickness distribution **202**, **203**, or **302**. The devices layers **106** may be disposed over the upper surface **212**, **312** of the base substrate **206**, **306** and/or the bottom surface **213**, **313** of the base substrate **206**, **306** by one or more PVD, CVD, PECVD, FCVD, ALD, spin-on coating processes, or an inkjet printing process

[0037] Material on which the index-matched layer may be formed may include any transparent substrate with thickness from about 150 mm or less about 50 mm or more, such as about 100 um or less to about 2 mm or more. Material on which the index-matched layer may be formed may include any substrate whose refractive index are about 1.9. Or less to about 1.3 or more, such as about 1.8. Or less to about 1.8 or more, such as about 1.6. The refractive index of the index-matched layer may be within 5% of the refractive index of the substrate. Material to be deposited on a substrate may include inkjet material. Material to be deposited on a substrate, e.g., as part of an index-matched layer, may have a refractive index from about 4.0 or less to about 0.2 or more, such as about 1.6. Material to be deposited on a substrate may include any one of the following, alone or in combination: high index nanoparticles, an organic ligand, such as a metal oxide (e.g., SiO_2, TiO_2, ZrO_2, Nb_2O_5, HfO_2, V_2O_5, Ta_2O_5, ZnO) metal sulfide, selenide telluride, nitride, phosphide, any core-shell structures with different compositions; ultra-violet (UV) or thermal curable resin/binders, such as acrylate based monomer, oligomers, epoxy bases monomer, oligomers, polymer or oligomers, such as silicone, novolac, PS, PMMA, polyacrylates, polymethacrylates, polyvinylalcohol, polystyrene, polyvinylpyrrolidone, polycarbonate, polyester, polyether, derivatives of components listed herein, copolymers of components listed herein; and solvents such as ethers, esters, carbonates, silanes, and any solvent whose barometric pressure is greater than about 250 C or more to about 350 C or less, such as about 300 C.

[0038] The target thickness change is utilized to determine the change to the base substrate thickness distribution that allows the target thickness distribution **202**, **203**, or **302** to form. Determining the target thickness change provides for the processes of the operation **204** to be adjusted accordingly to form the target thickness distribution **202**, **203**, or **302** as desired. FIGS. **2**A-**3**C show the target thickness distribution **202**, **203**, and **302** formed in the base substrate **206**, **306** of the substrate **200**, **300**. The substrate **200**, **300** of FIGS. **2**A-**3**C correspond to the waveguides **101** shown in FIG. **1**B. The **200**, **300** of FIGS. **2**A-**3**C also correspond to the waveguides **101** and the inactive areas **214**, **314** shown in FIGS. **2**A-**3**C.

[0039] The target thickness distribution **202**, **203**, and **302** shown in FIGS. **2**A-**3**C is a result of utilizing the target thickness change of the method **400**. The target thickness distribution **202**, **203**, or **302** may be formed at each wave-

guide **101**. Therefore, the target thickness distribution **202**, **203**, or **302** across the substrate **100** at each waveguide **101** is the configurable based one or more uses associated with the waveguide **101**. Each waveguide **101** having the target thickness distribution **202**, **203**, or **302** will allow for reduced variability in the devices to be formed thereon.

[0040] At an optional operation **406**, gratings may be formed on the substrate **100**, **200**, **300**. In some embodiments, the gratings may include the grating structures **102** of FIG. **1**, and the grating structures **218**, **318** for FIGS. **2**A-**3**C. The grating structures **102**, **218**, **316** may be formed vertically or diagonally within or over substrate **100**, **200**, **300**. The grating structures **102**, **218**, **318** may be disposed over the upper surface **212**, **312** of the base substrate **206**, **306**, over the top surface **217**, **317** of index-matched layers, over the bottom surface **216**, **317** of index-matched layers **106**, and/or over the bottom surface **213**, **313** of the base substrate **206**. The grating structures **102**, **218**, **316** may be part of at least one grating, including pupil expansion grating, input coupler grating, output coupler grating, and the like.

[0041] While the foregoing is directed to embodiments of the present disclosure, other and further embodiments of the disclosure may be devised without departing from the basic scope thereof, and the scope thereof is determined by the claims that follow.

What is claimed is:

1. A waveguide, comprising:

a waveguide substrate, the waveguide having a substrate thickness distribution; and

an index-matched layer having a first surface disposed on the waveguide substrate and a second surface opposing the first surface, wherein:

the index-matched layer is disposed over a portion of the waveguide substrate; and

a device slope of a second surface of the index-matched layer is substantially the same as the waveguide slope of the first surface of the waveguide.

2. The waveguide of claim **1**, wherein the waveguide further comprises at least one grating having grating structures in the index-matched layer.

3. The waveguide of claim **1**, wherein the waveguide further comprises at least one grating having grating structures disposed over a bottom surface of the waveguide substrate.

4. The waveguide of claim **1**, wherein the waveguide further comprises at least one grating having grating structures disposed over the index-matched layer.

5. The waveguide of claim **4**, wherein the at least one grating is a pupil expansion grating.

6. The waveguide of claim **1**, wherein a refractive index of the index-matched layer is within 5% of the refractive index of the waveguide substrate.

7. The waveguide of claim **1**, wherein the refractive index is within about 5 percent of a refractive index of the waveguide substrate.

8. The waveguide of claim **1**, wherein the waveguide further comprises an inactive area disposed on the first surface of the waveguide substantially adjacent to the grating.

9. A waveguide, comprising:

a waveguide substrate, the waveguide having a substrate thickness distribution; and

an index-matched layer having a first surface disposed on the waveguide substrate and a second surface opposing the first surface, wherein:

the index-matched layer is disposed over a portion of the waveguide substrate, and

a device slope of a second surface of the index-matched layer has a slope value configured to vary the substrate thickness distribution across the index-matched layer.

10. The waveguide of claim **9**, wherein the waveguide further comprises at least one grating having grating structures in the index-matched layer.

11. The waveguide of claim **9**, wherein the waveguide further comprises at least one grating having grating structures disposed over a bottom surface of the waveguide substrate.

12. The waveguide of claim **9**, wherein the waveguide further comprises at least one grating having grating structures disposed over the index-matched layer.

13. The waveguide of claim **12**, wherein the at least one grating is a pupil expansion grating.

14. The waveguide of claim **9**, wherein a refractive index of the index-matched layer is within 5% of the refractive index of the waveguide substrate.

15. The waveguide of claim **9**, wherein the refractive index is within about 5 percent of a refractive index of the waveguide substrate.

16. The waveguide of claim **9**, wherein the waveguide further comprises an inactive area disposed on the first surface of the waveguide substantially adjacent to the grating.

17. A method for forming a waveguide, the method comprising:

measuring a waveguide substrate, the waveguide having a substrate thickness distribution; and

depositing an index-matched layer onto a surface of the waveguide, the index-matched layer having a first surface disposed on the waveguide substrate and a second surface opposing the first surface, wherein:

the index-matched layer is disposed only over a portion of the waveguide substrate, and

a device slope of a second surface of the index-matched layer is substantially the same as the waveguide slope of the first surface of the waveguide.

18. The method of claim **17**, wherein the method further comprises forming at least one grating having grating structures in the index-matched layer.

19. The waveguide of claim **17**, wherein the method further comprises forming at least one grating having grating structures disposed over a bottom surface of the waveguide substrate.

20. The waveguide of claim **9**, wherein the method further comprises forming at least one grating having grating structures disposed over the index-matched layer.

* * * * *