US 20240184024A1

(19) **United States**

(12) **Patent Application Publication**

YOUNG et al.

(10) **Pub. No.: US 2024/0184024 A1**

(43) **Pub. Date: Jun. 6, 2024**

(54) **METHOD OF BUILDING A 3D FUNCTIONAL OPTICAL MATERIAL STACKING STRUCTURE**

(71) Applicant: **Applied Materials, Inc.**, Santa Clara, CA (US)

(72) Inventors: **Michael Yu-tak YOUNG**, Cupertino, CA (US); **Ludovic GODET**, Sunnyvale, CA (US); **Robert Jan VISSER**, Menlo Park, CA (US); **Naamah ARGAMAN**, San Jose, CA (US); **Christopher Dennis BENCHER**, Santa Clara, CA (US); **Wayne MCMILLAN**, San Jose, CA (US)

(21) Appl. No.: **18/439,434**

(22) Filed: **Feb. 12, 2024**

Related U.S. Application Data

(63) Continuation of application No. 17/456,507, filed on Nov. 24, 2021, which is a continuation of application No. 16/293,354, filed on Mar. 5, 2019, now Pat. No. 11,187,836.

(60) Provisional application No. 62/639,475, filed on Mar. 6, 2018.

Publication Classification

(51) **Int. Cl.**

G02B 5/18	(2006.01)
G02B 26/08	(2006.01)
G02B 30/26	(2006.01)
G03F 7/00	(2006.01)

(52) **U.S. Cl.**

CPC ***G02B 5/1842*** (2013.01); ***G02B 5/1857*** (2013.01); ***G02B 26/0808*** (2013.01); ***G02B 30/26*** (2020.01); *G02B 5/1876* (2013.01); *G03F 7/0037* (2013.01)

(57) **ABSTRACT**

Embodiments herein describe a sub-micron 3D diffractive optics element and a method for forming the sub-micron 3D diffractive optics element. In a first embodiment, a method is provided for forming a sub-micron 3D diffractive optics element on a film stack disposed on a substrate without planarization. The method includes forming a hardmask on a top surface of a film stack. Forming a mask material on a portion of the top surface and a portion of the hardmask. Etching the top surface. Trimming the mask. Etching the top surface again. Trimming the mask a second time. Etching the top surface yet again and then stripping the mask material.

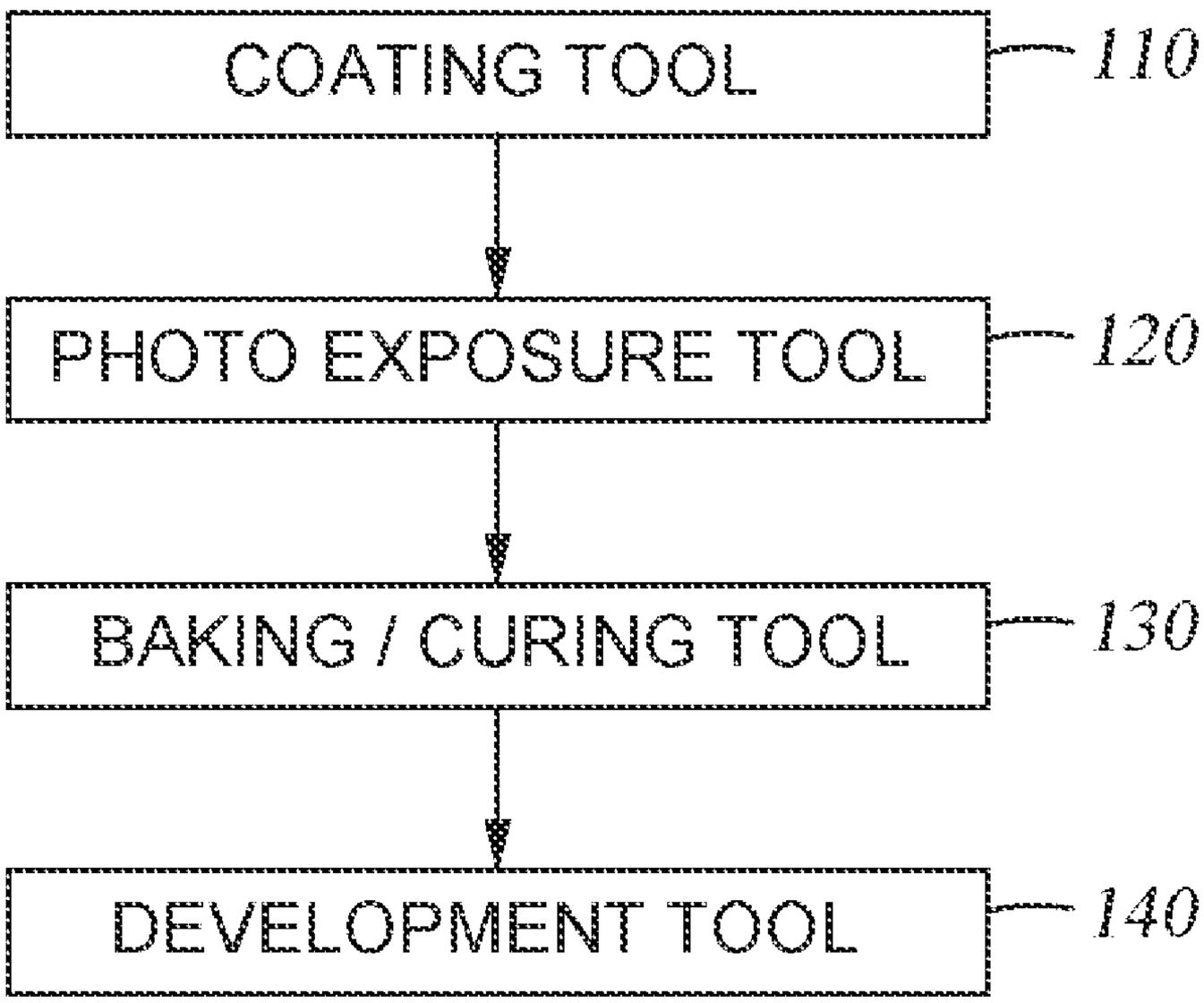

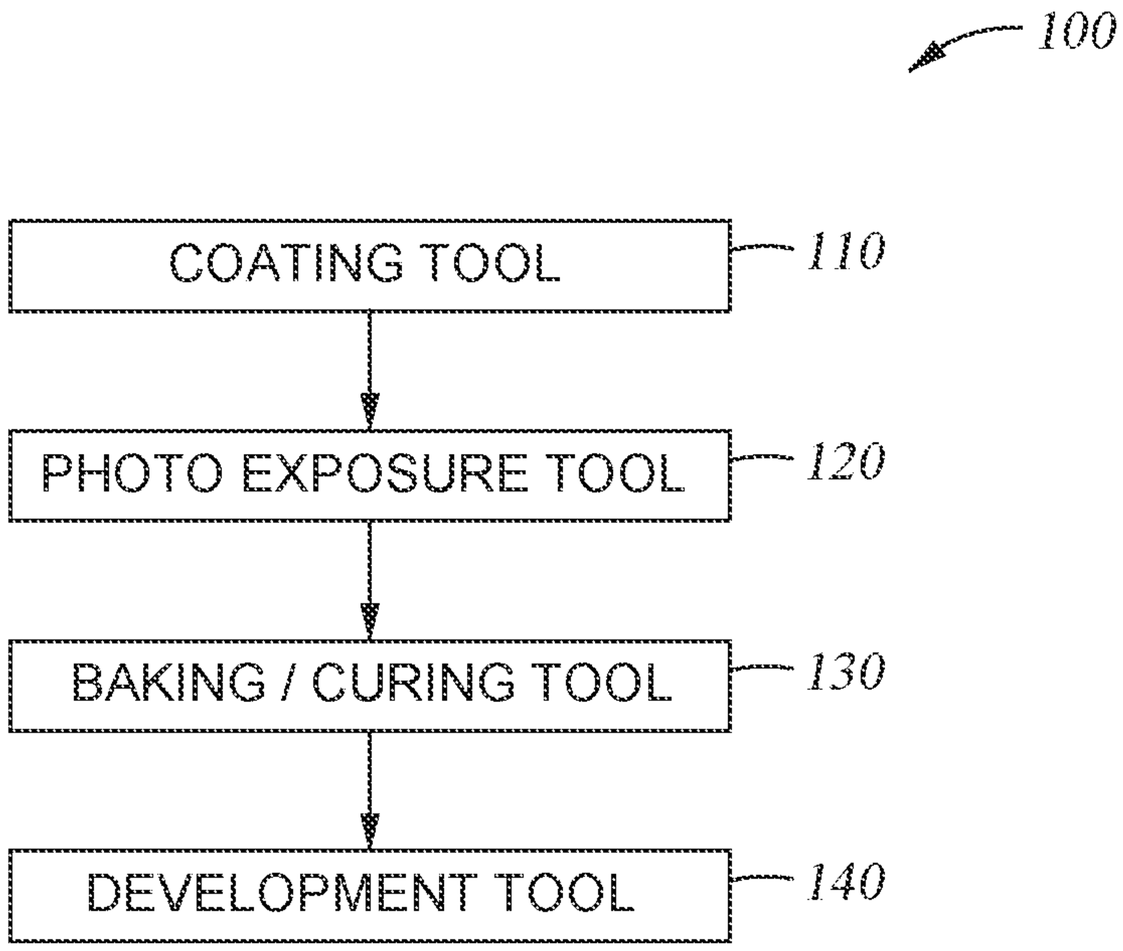
100
COATING TOOL
110
PHOTO EXPOSURE TOOL
120
BAKING / CURING TOOL
130
DEVELOPMENT TOOL
140

Fig. 1

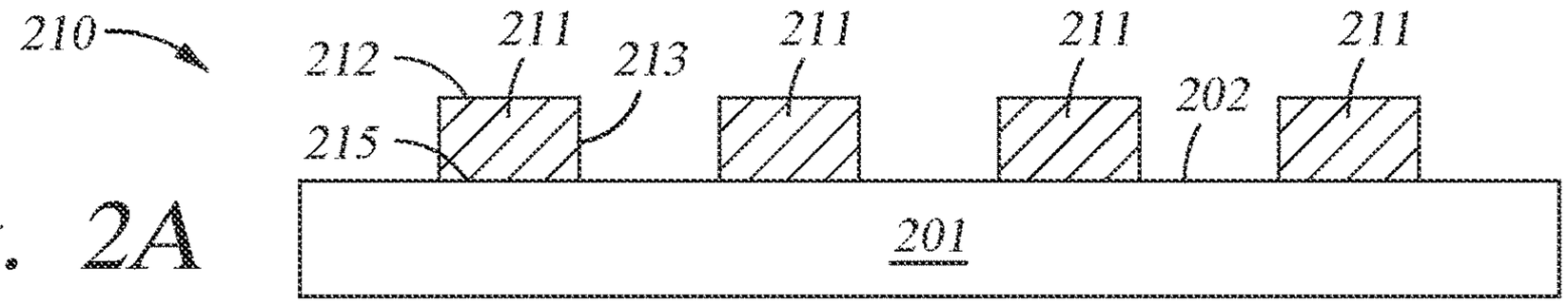

Fig. 2A

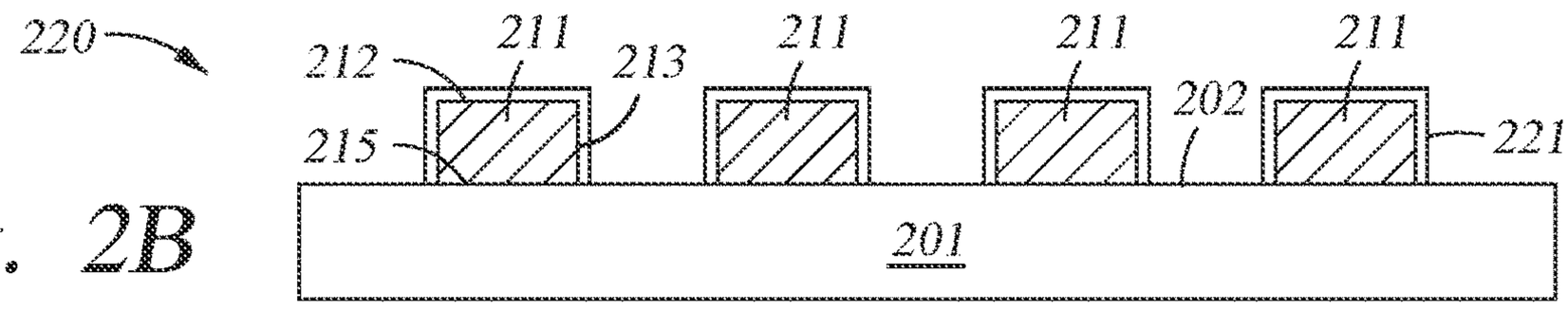

Fig. 2B

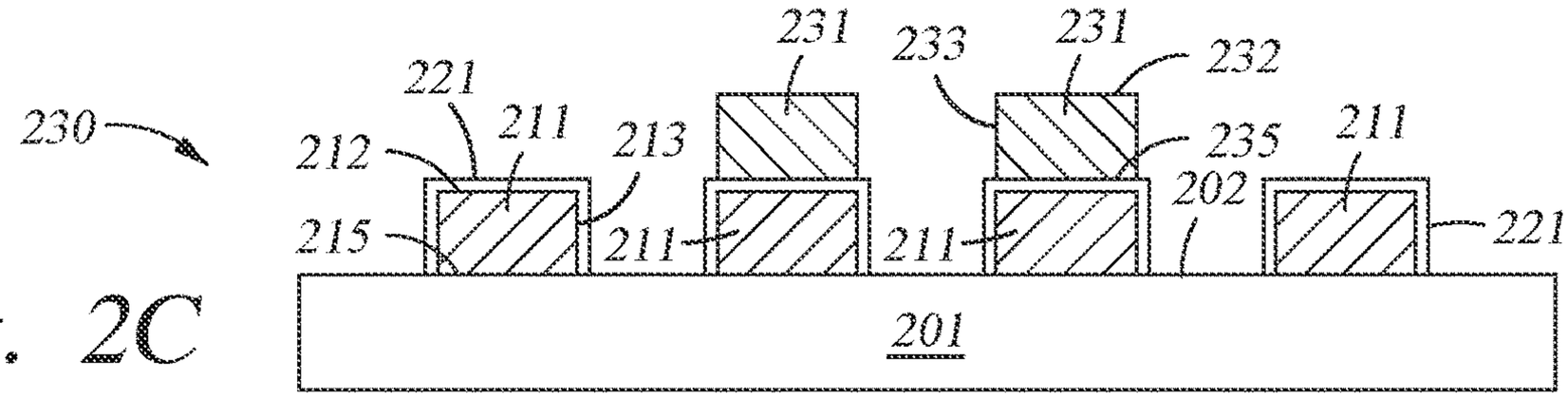

Fig. 2C

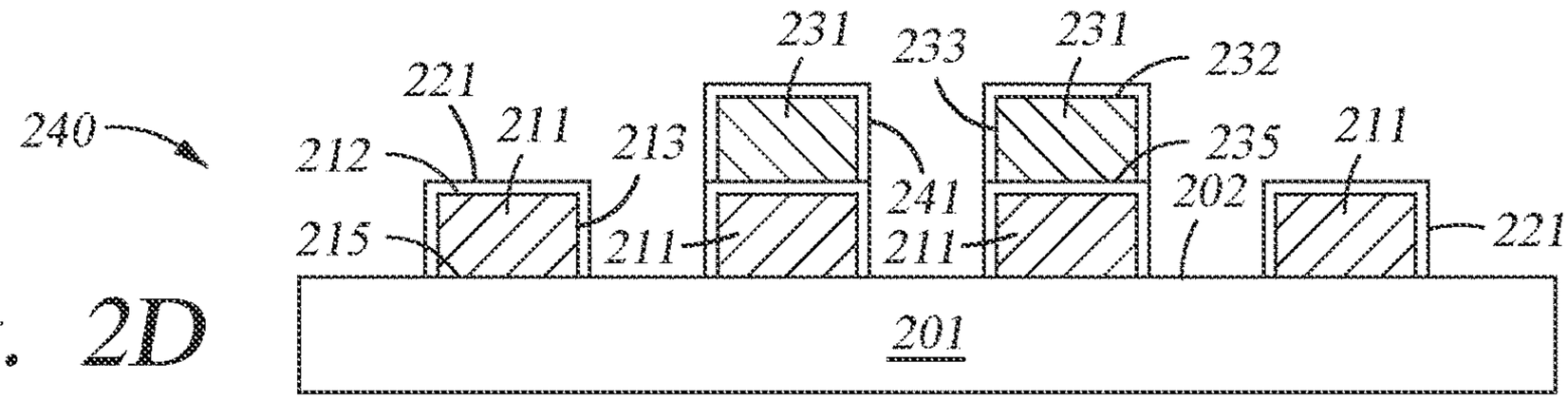

Fig. 2D

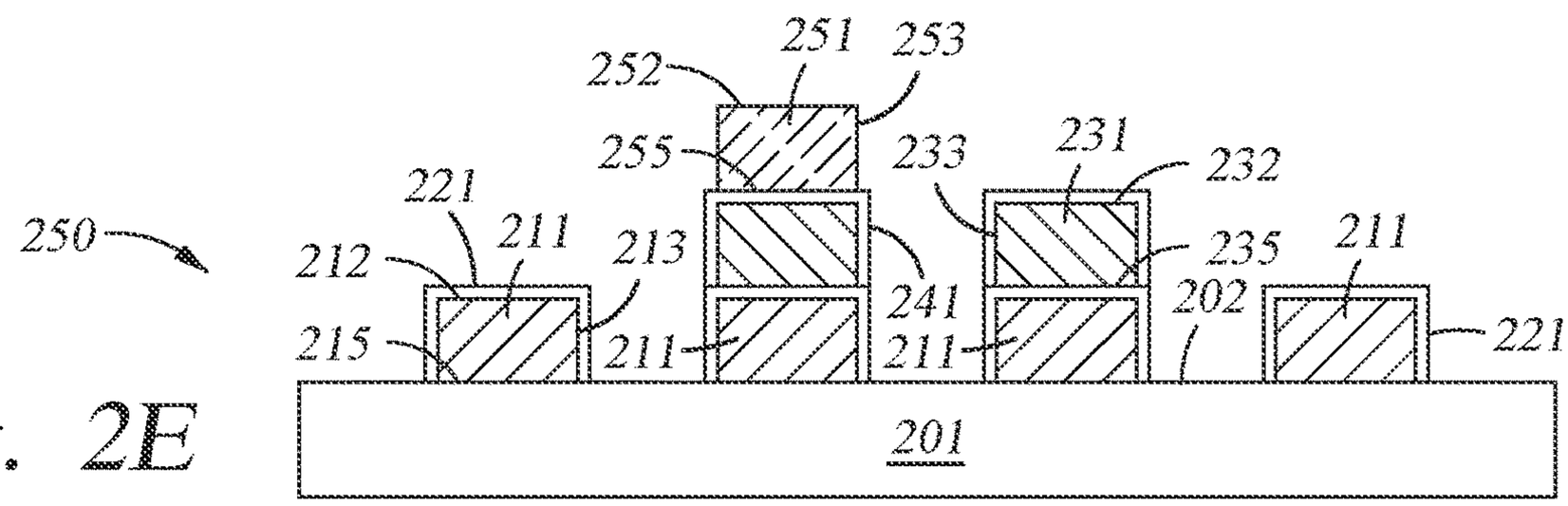

Fig. 2E

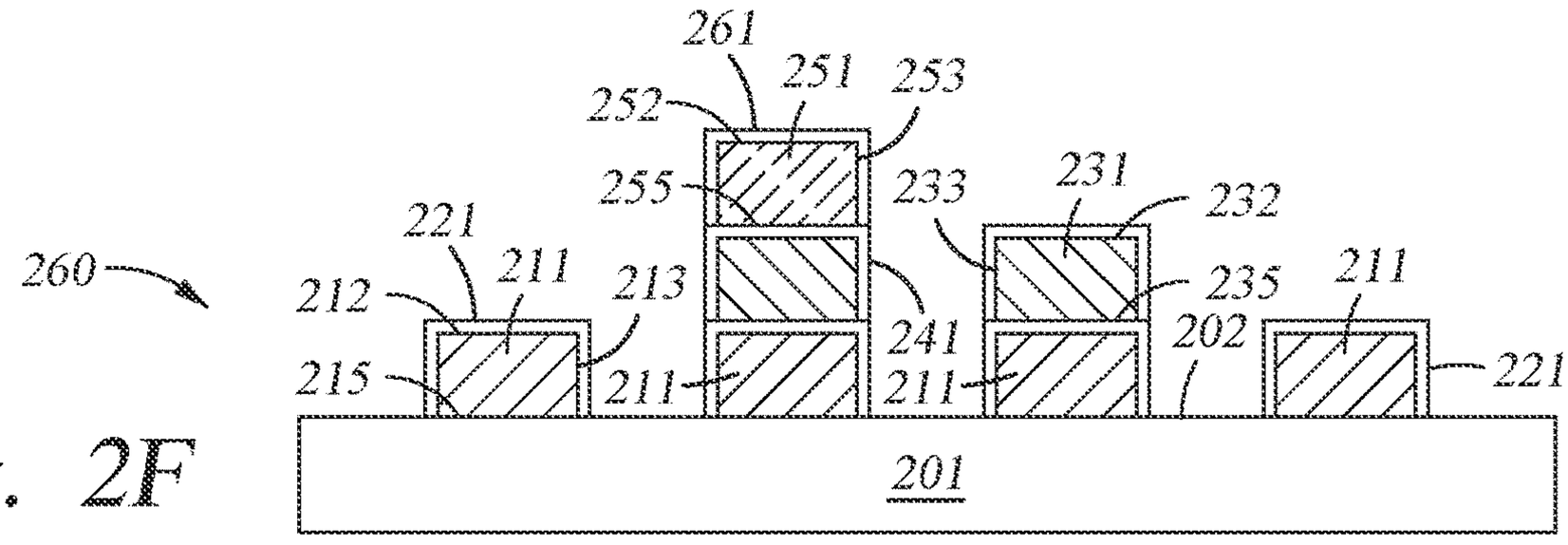

Fig. 2F

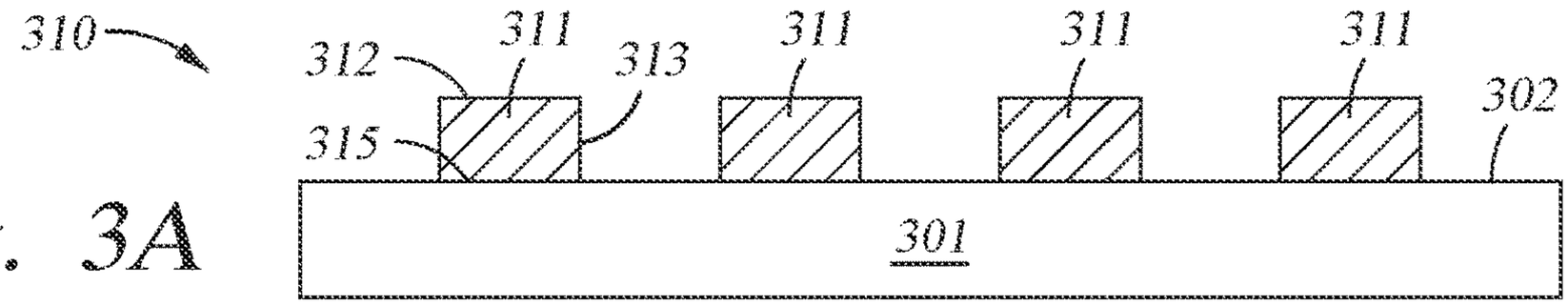

Fig. 3A

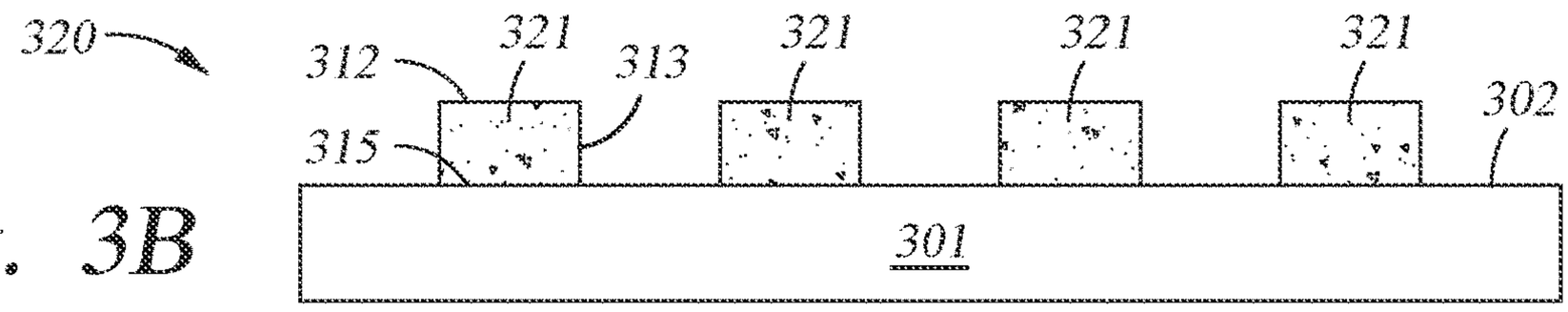

Fig. 3B

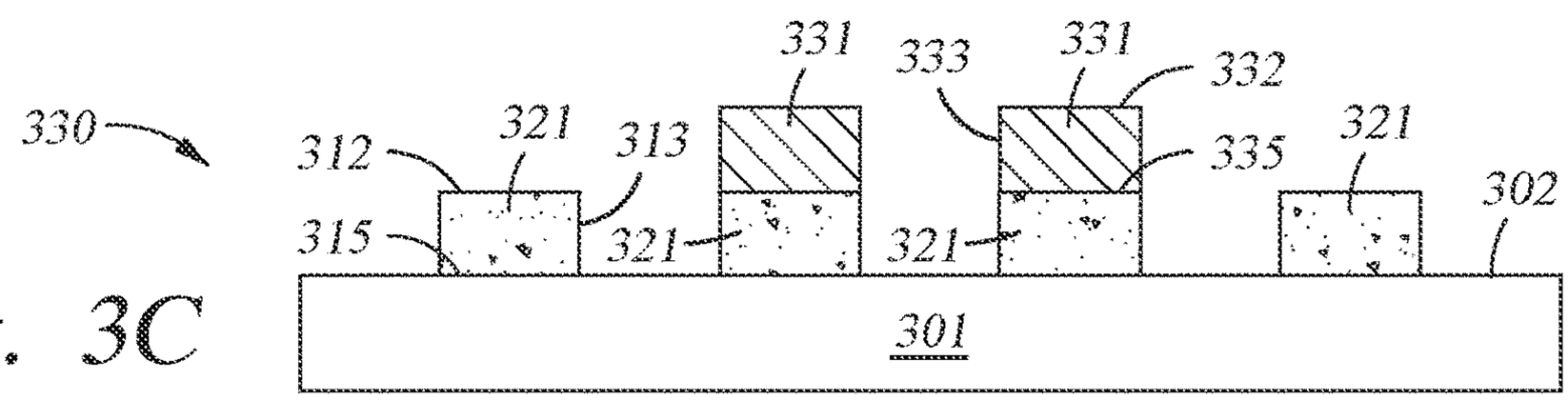

Fig. 3C

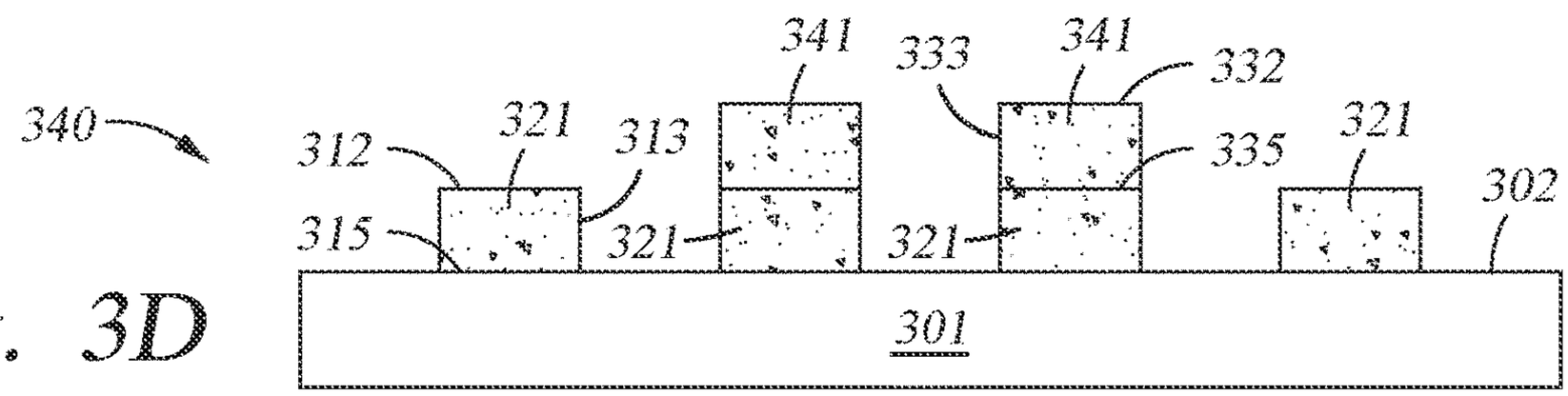

Fig. 3D

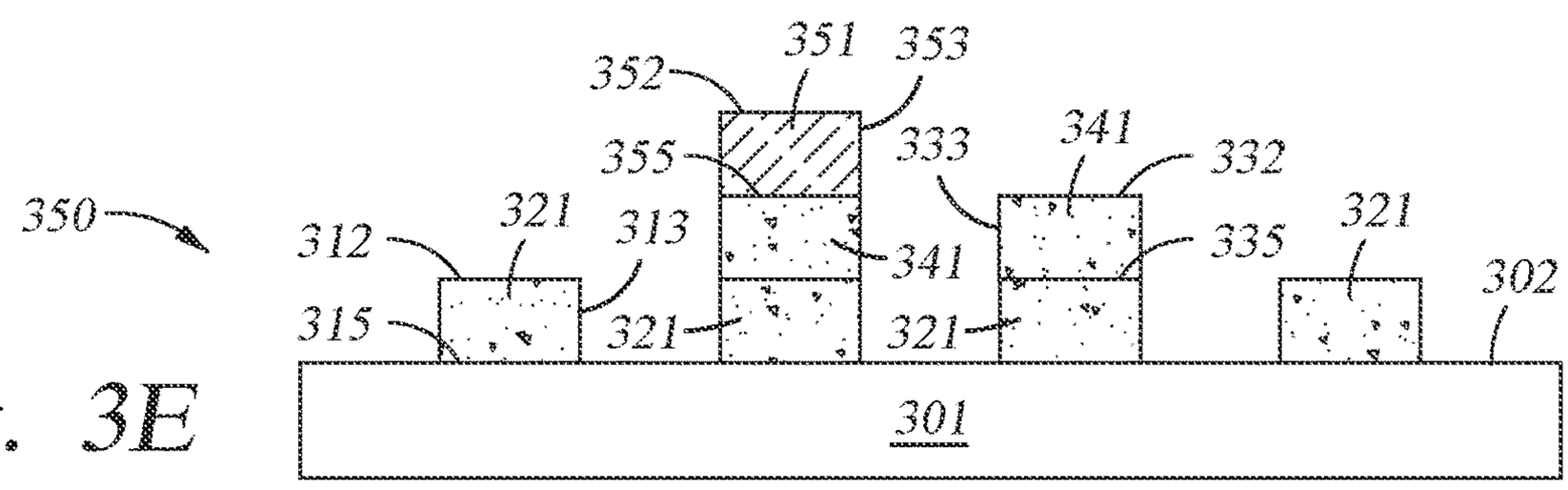

Fig. 3E

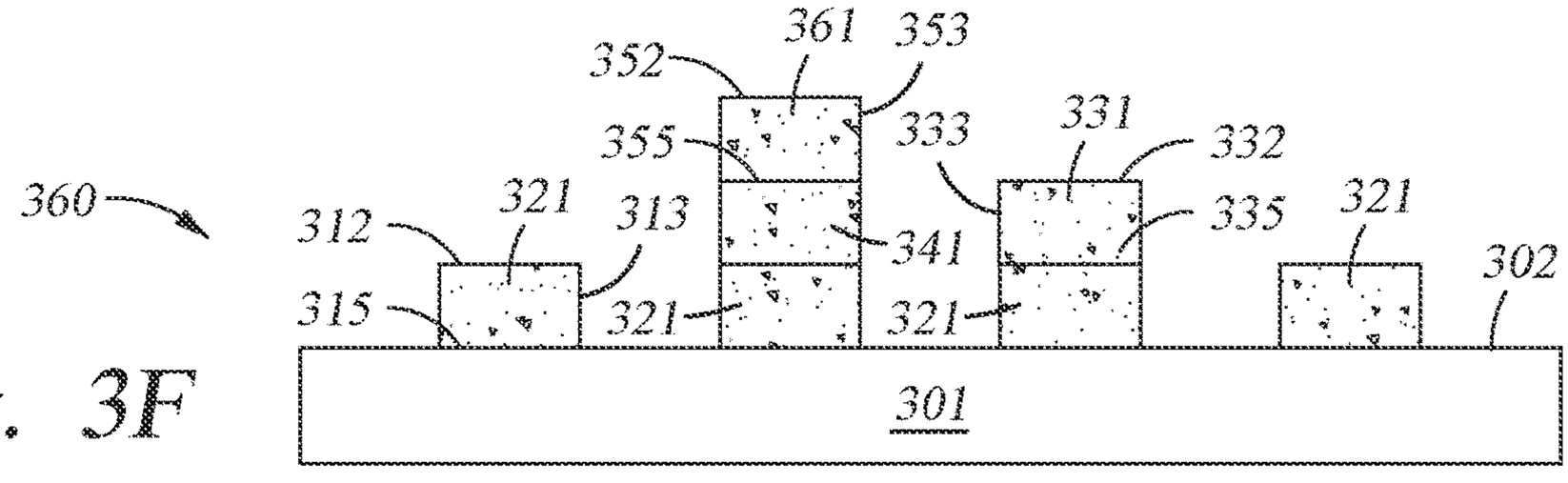

Fig. 3F

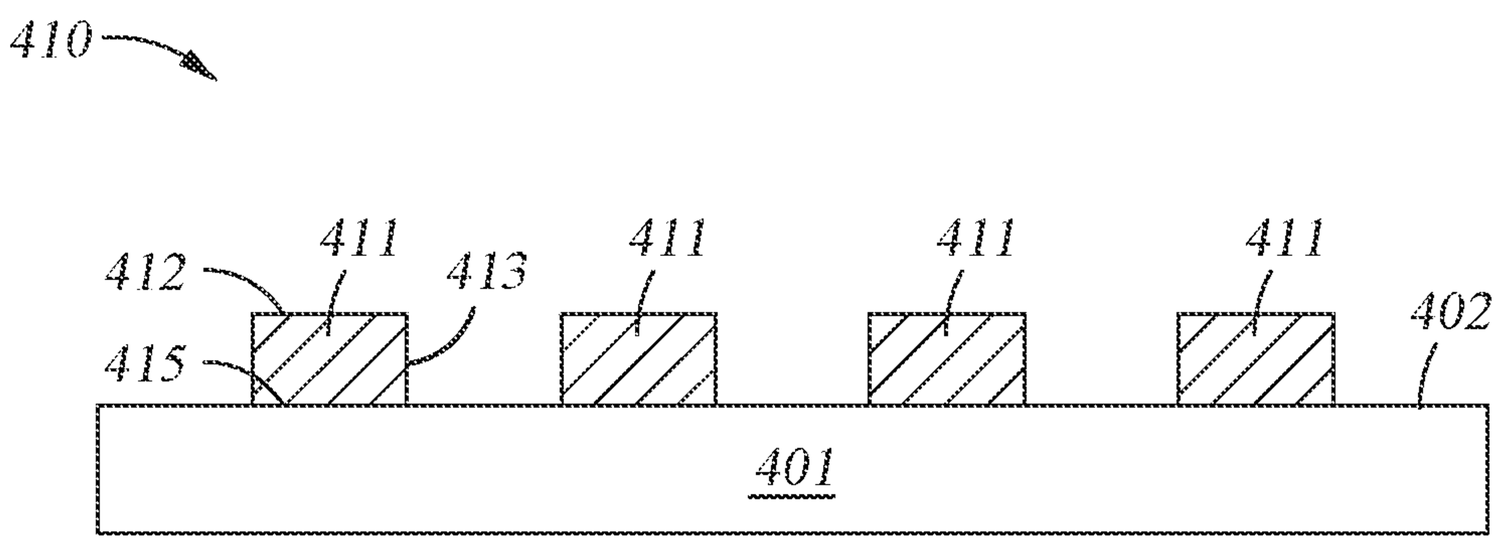

Fig. 4A

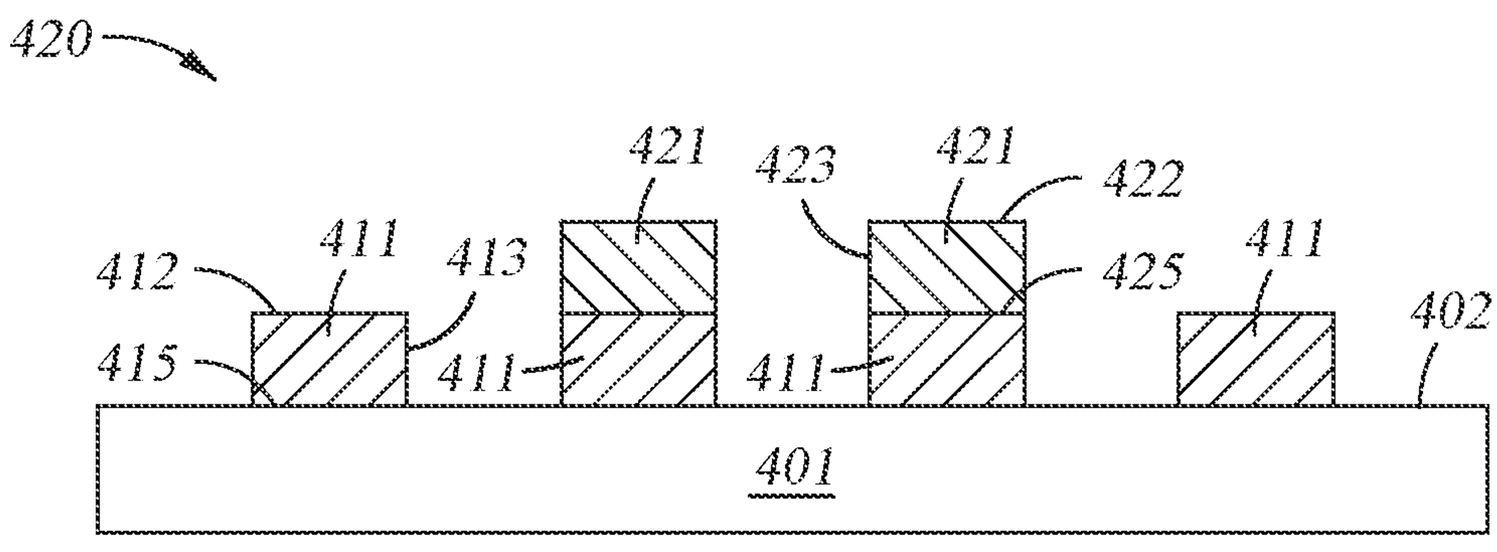

Fig. 4B

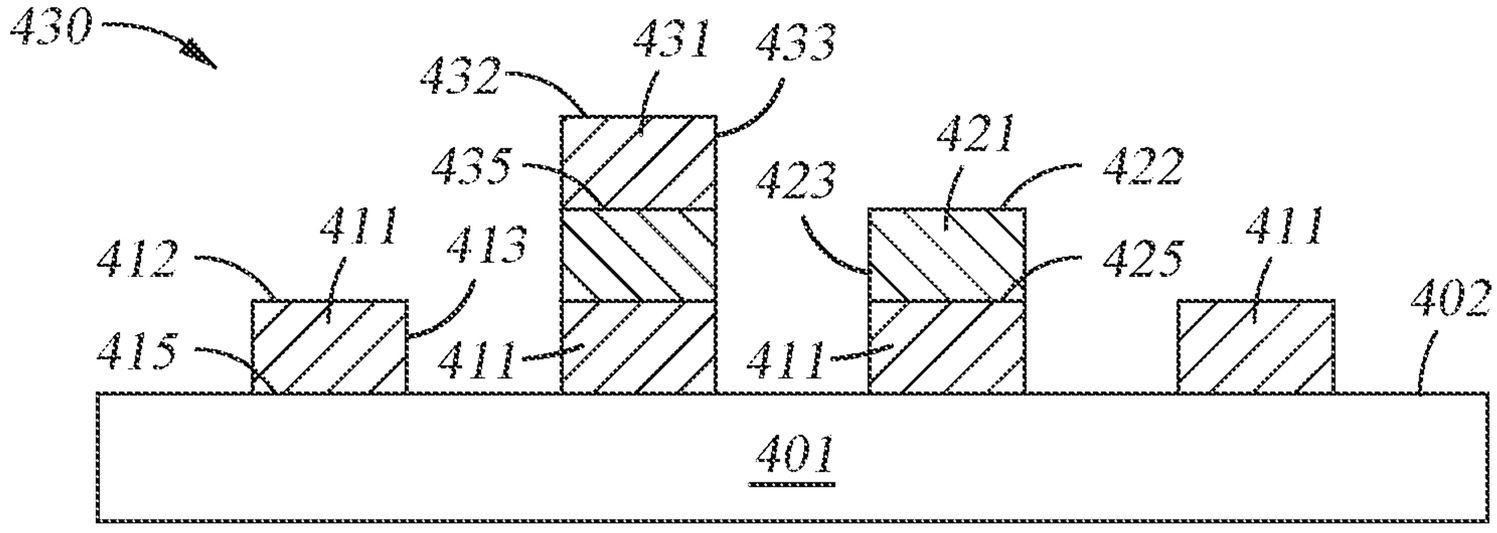

Fig. 4C

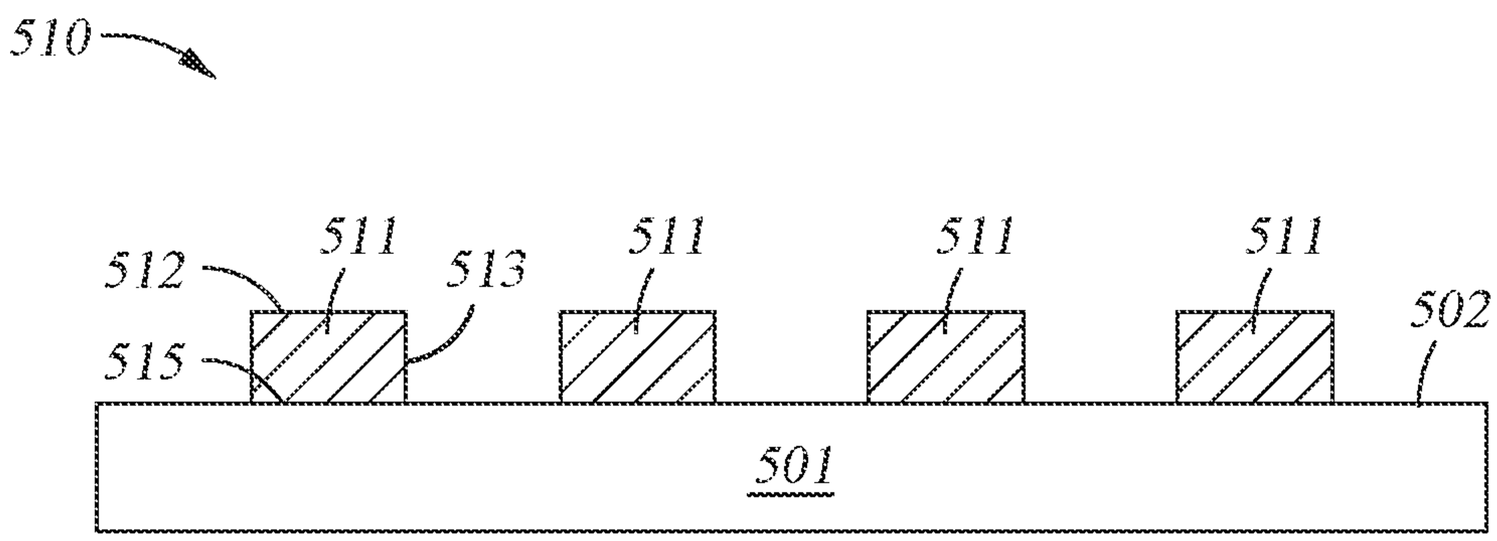

Fig. 5A

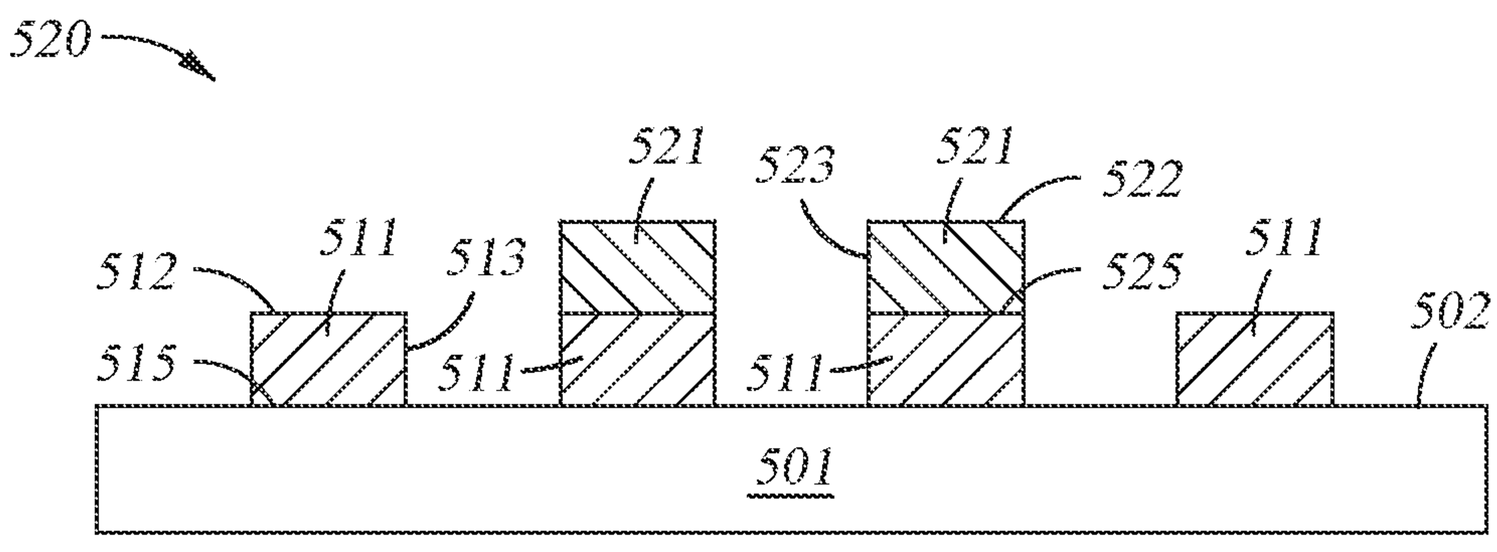

Fig. 5B

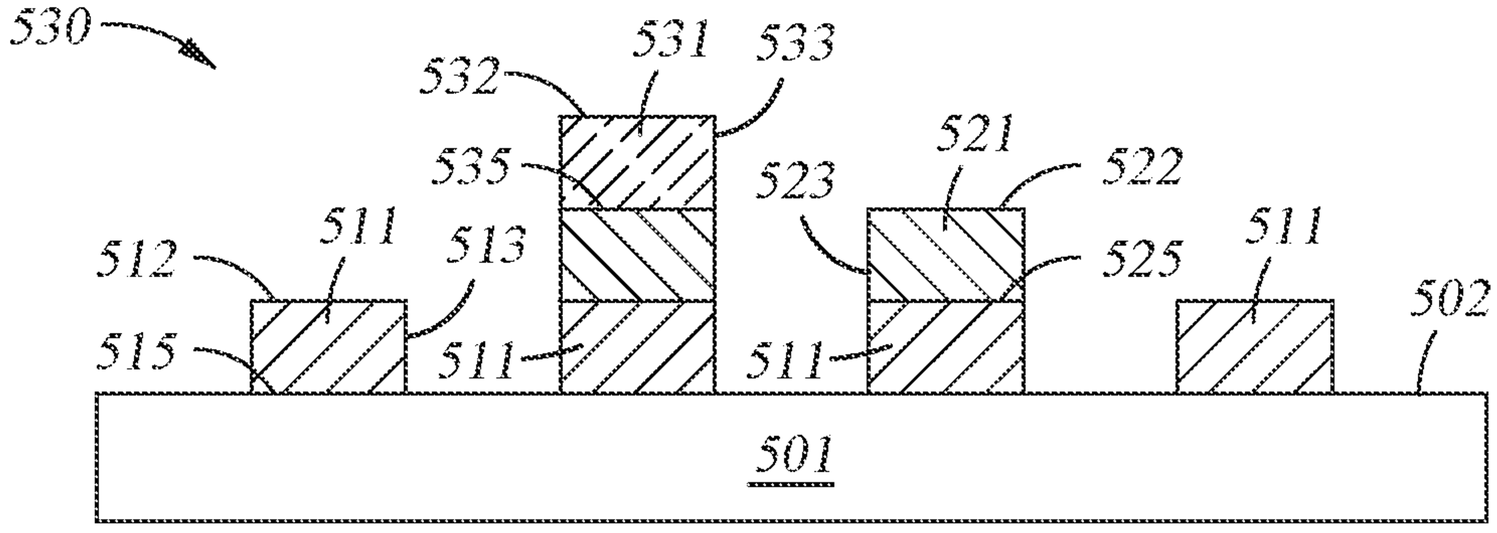

Fig. 5C

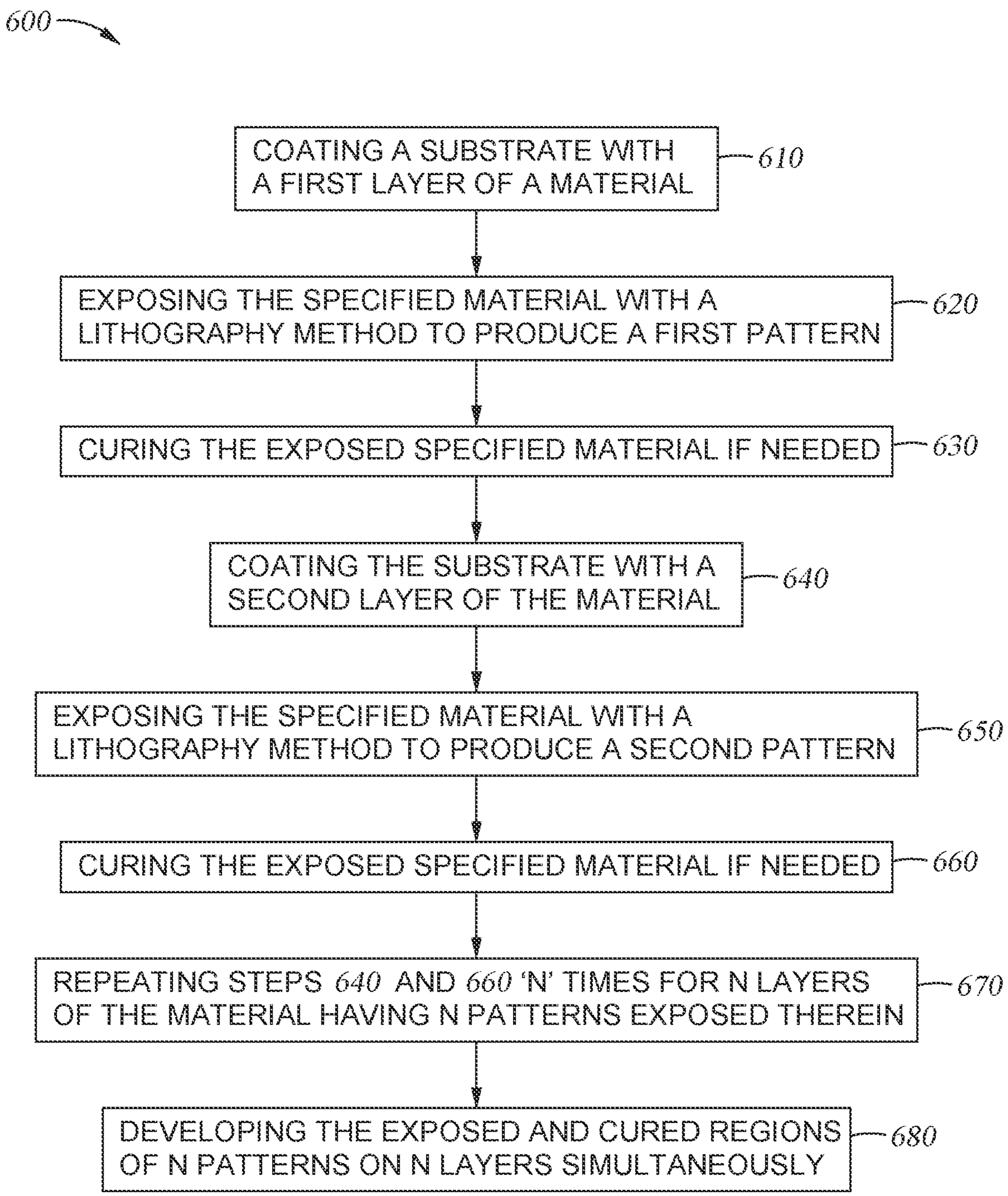
600
COATING A SUBSTRATE WITH A FIRST LAYER OF A MATERIAL
610
EXPOSING THE SPECIFIED MATERIAL WITH A LITHOGRAPHY METHOD TO PRODUCE A FIRST PATTERN
620
CURING THE EXPOSED SPECIFIED MATERIAL IF NEEDED
630
COATING THE SUBSTRATE WITH A SECOND LAYER OF THE MATERIAL
640
EXPOSING THE SPECIFIED MATERIAL WITH A LITHOGRAPHY METHOD TO PRODUCE A SECOND PATTERN
650
CURING THE EXPOSED SPECIFIED MATERIAL IF NEEDED
660
REPEATING STEPS 640 AND 660 'N' TIMES FOR N LAYERS OF THE MATERIAL HAVING N PATTERNS EXPOSED THEREIN
670
DEVELOPING THE EXPOSED AND CURED REGIONS OF N PATTERNS ON N LAYERS SIMULTANEOUSLY
680

Fig. 6

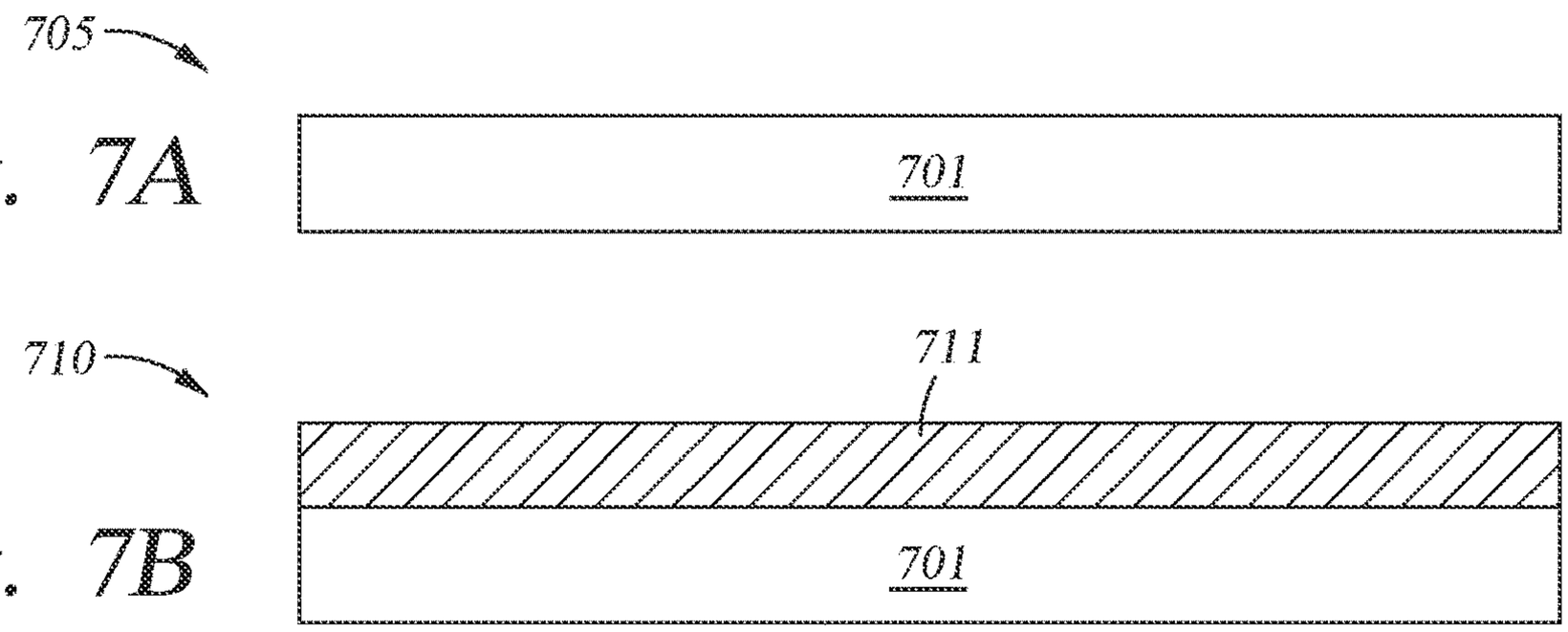

Fig. 7A

Fig. 7B

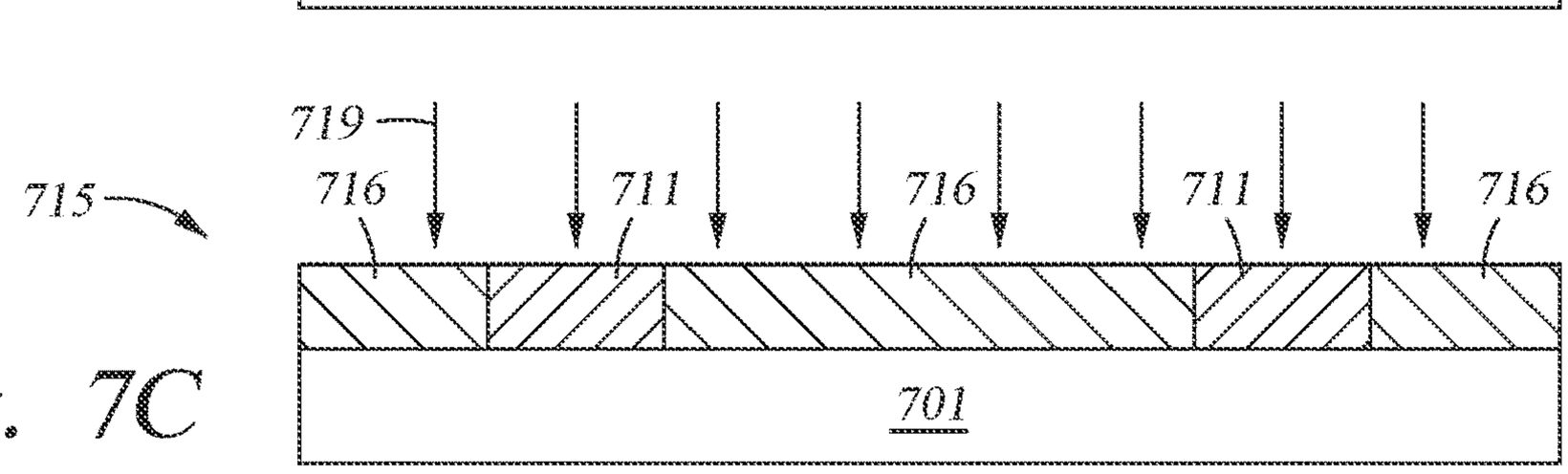

Fig. 7C

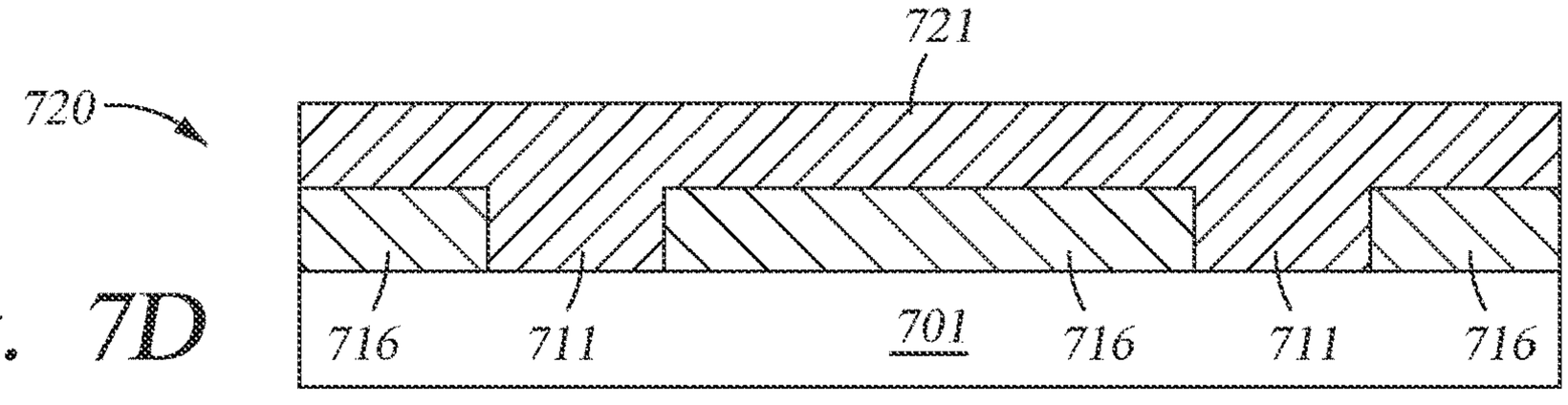

Fig. 7D

Fig. 7E

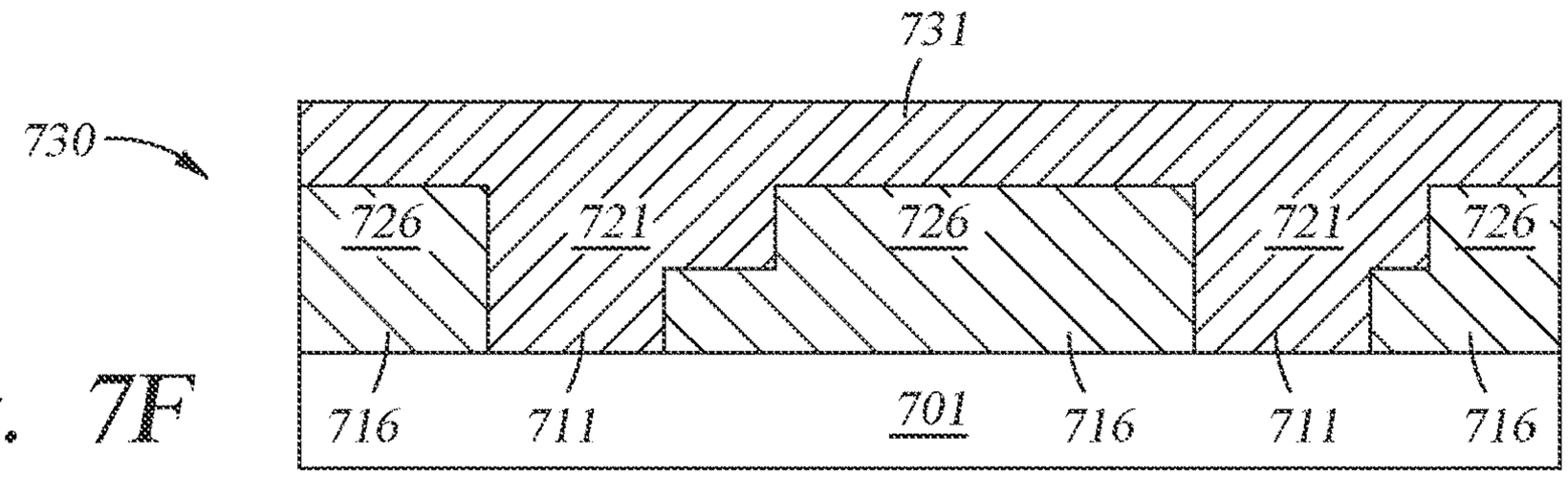

Fig. 7F

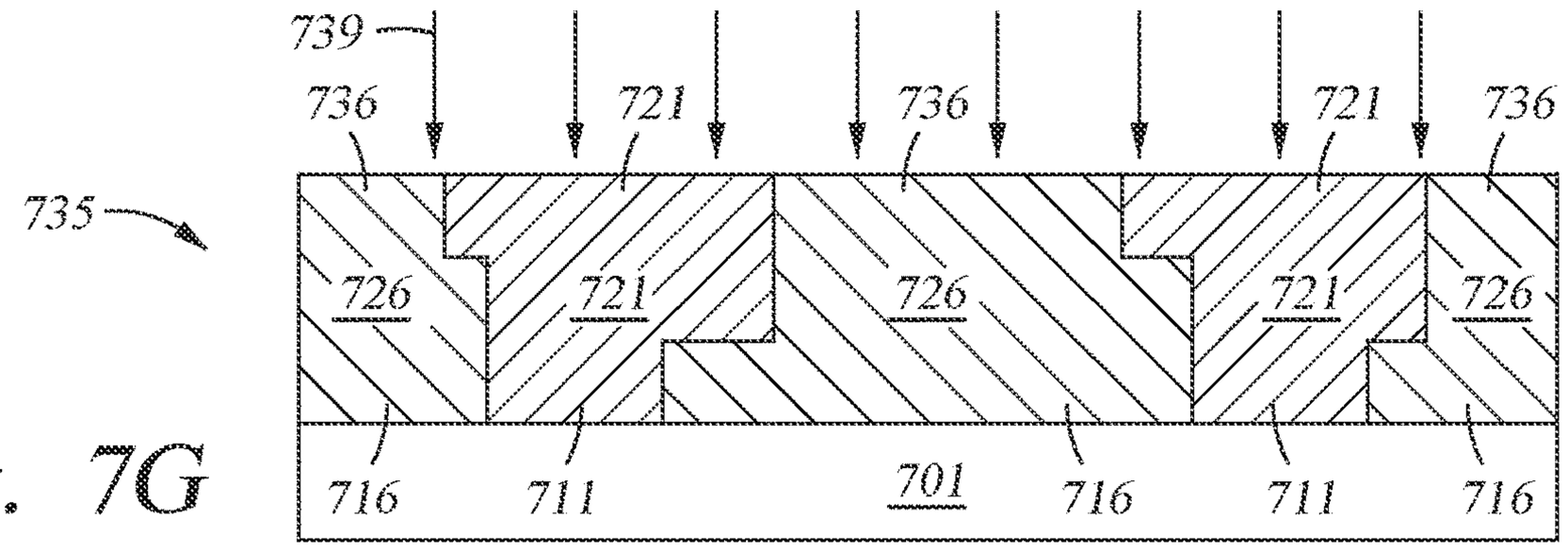

Fig. 7G

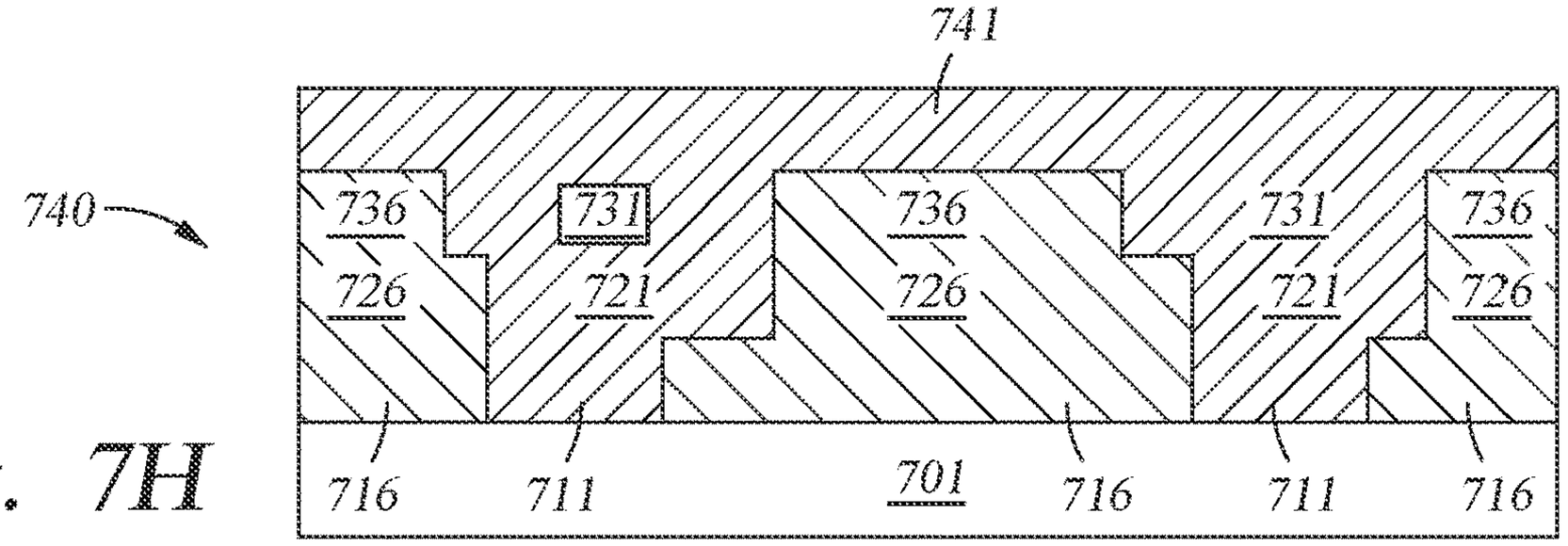

Fig. 7H

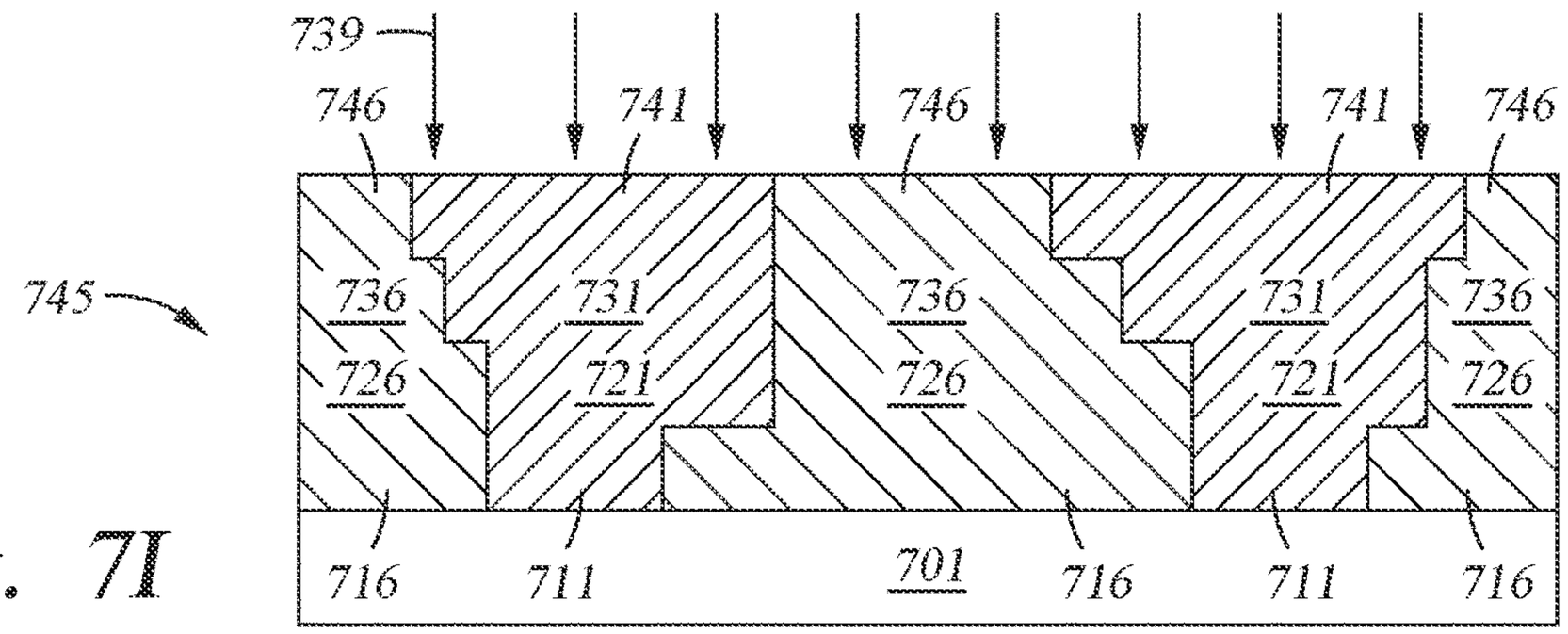

Fig. 7I

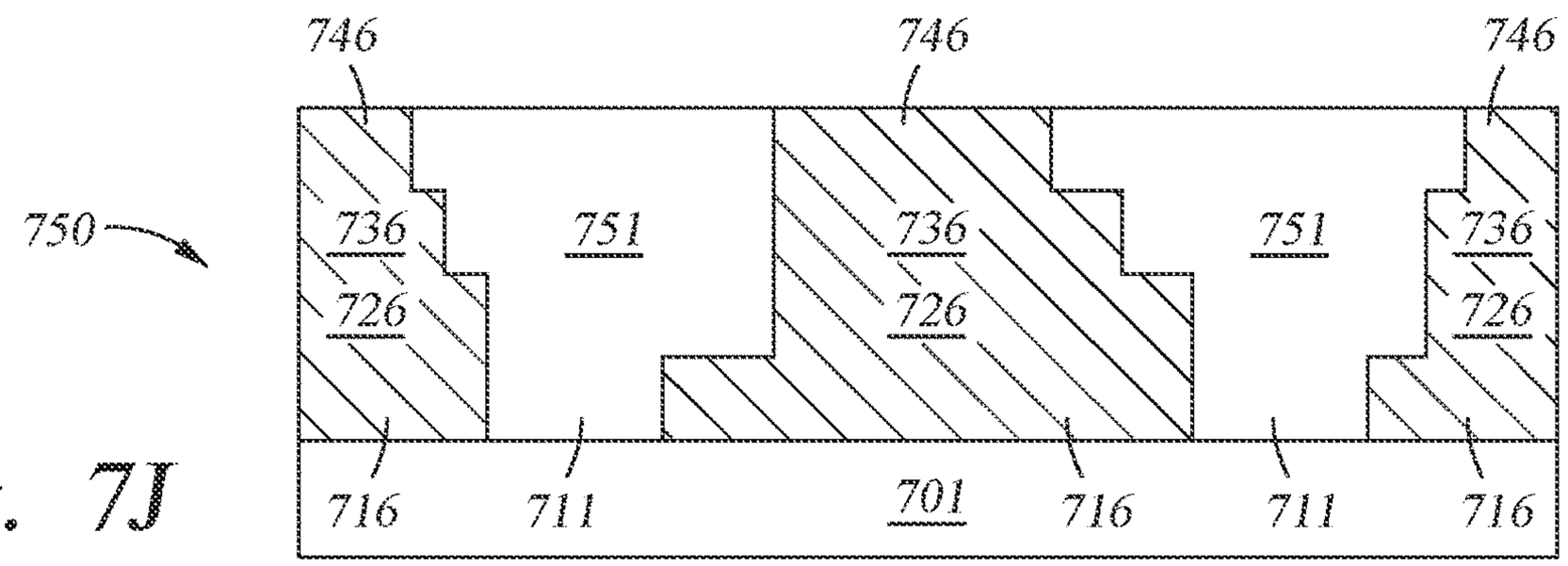

Fig. 7J

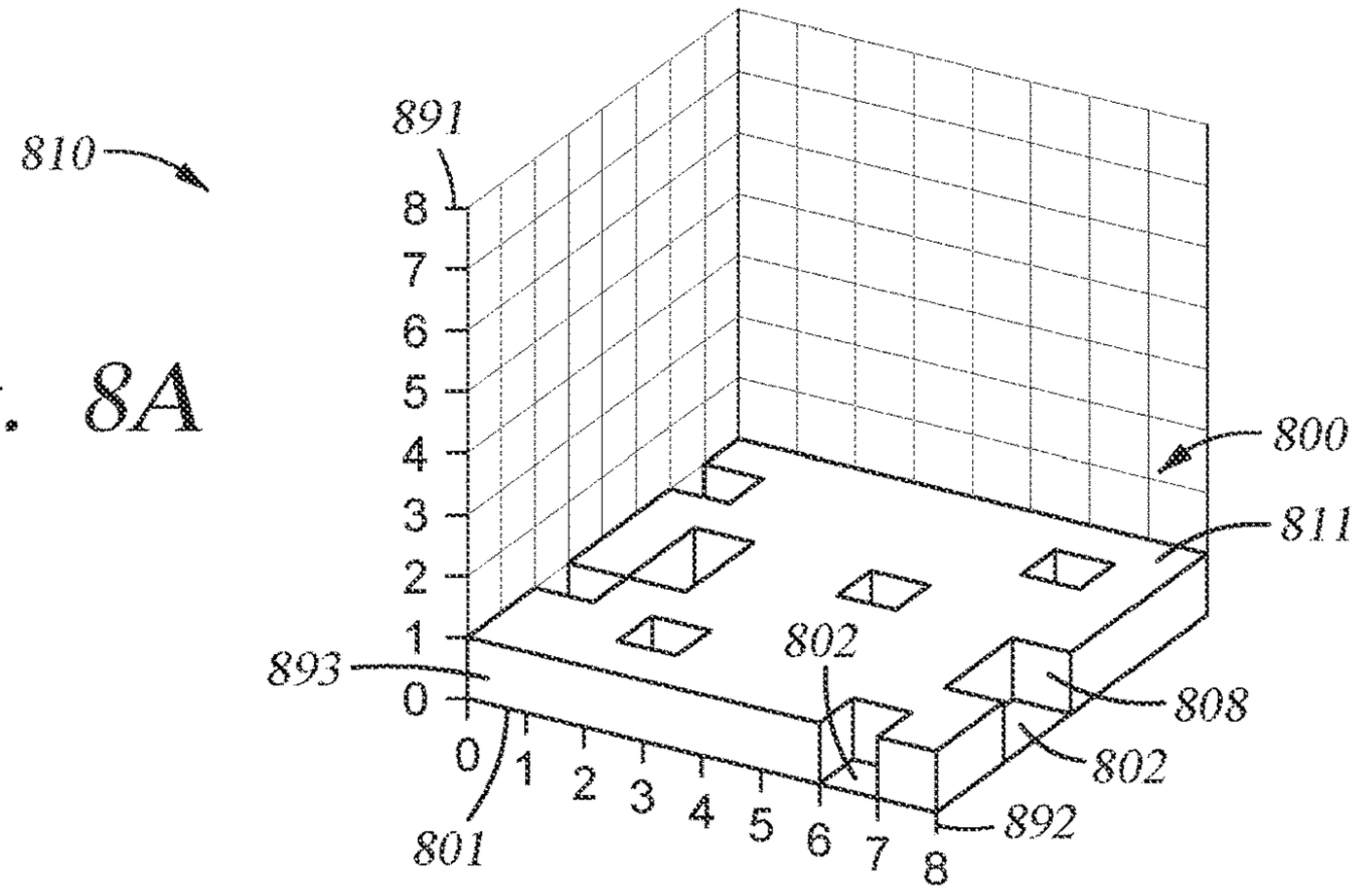

Fig. 8A

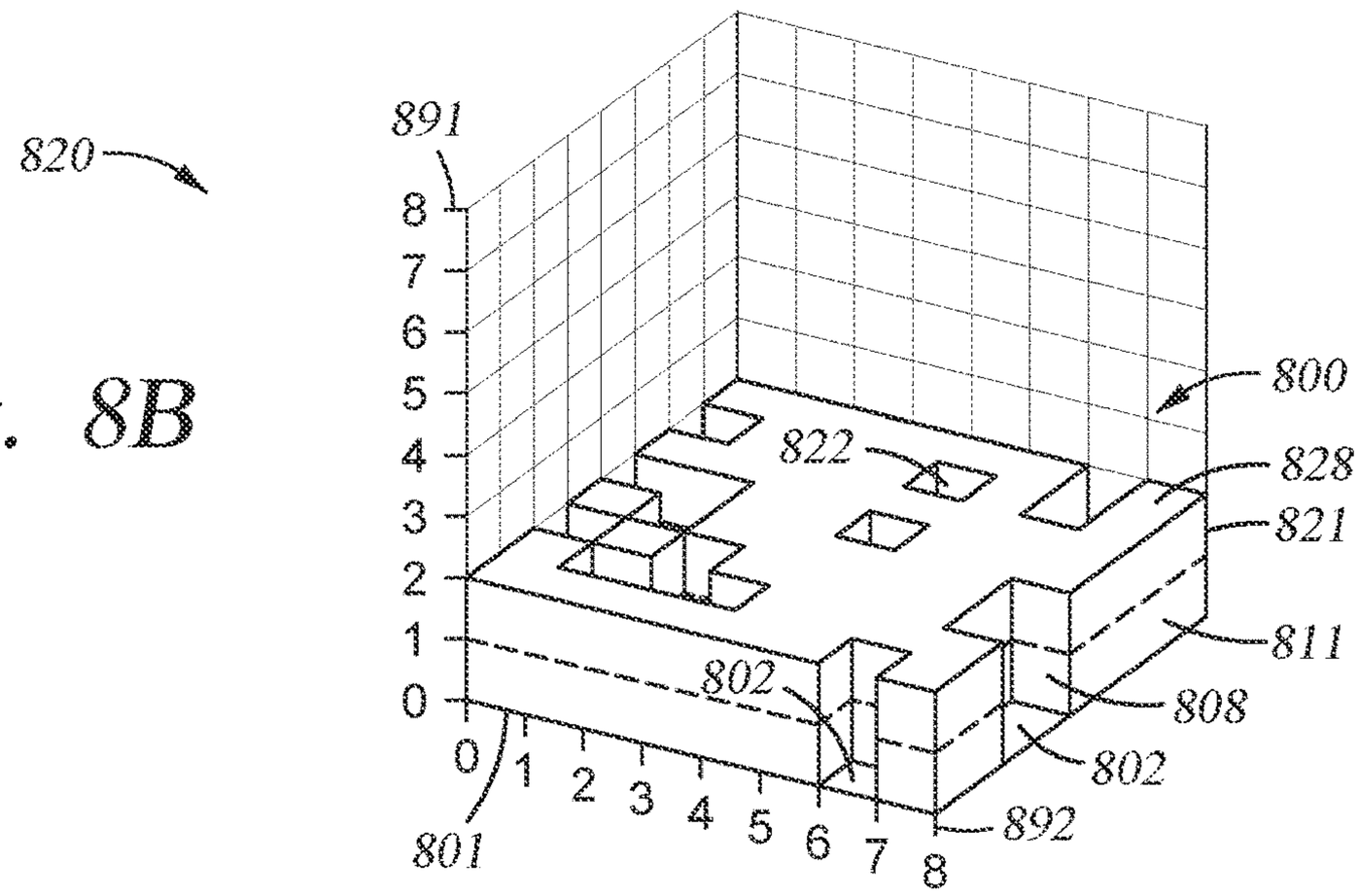

Fig. 8B

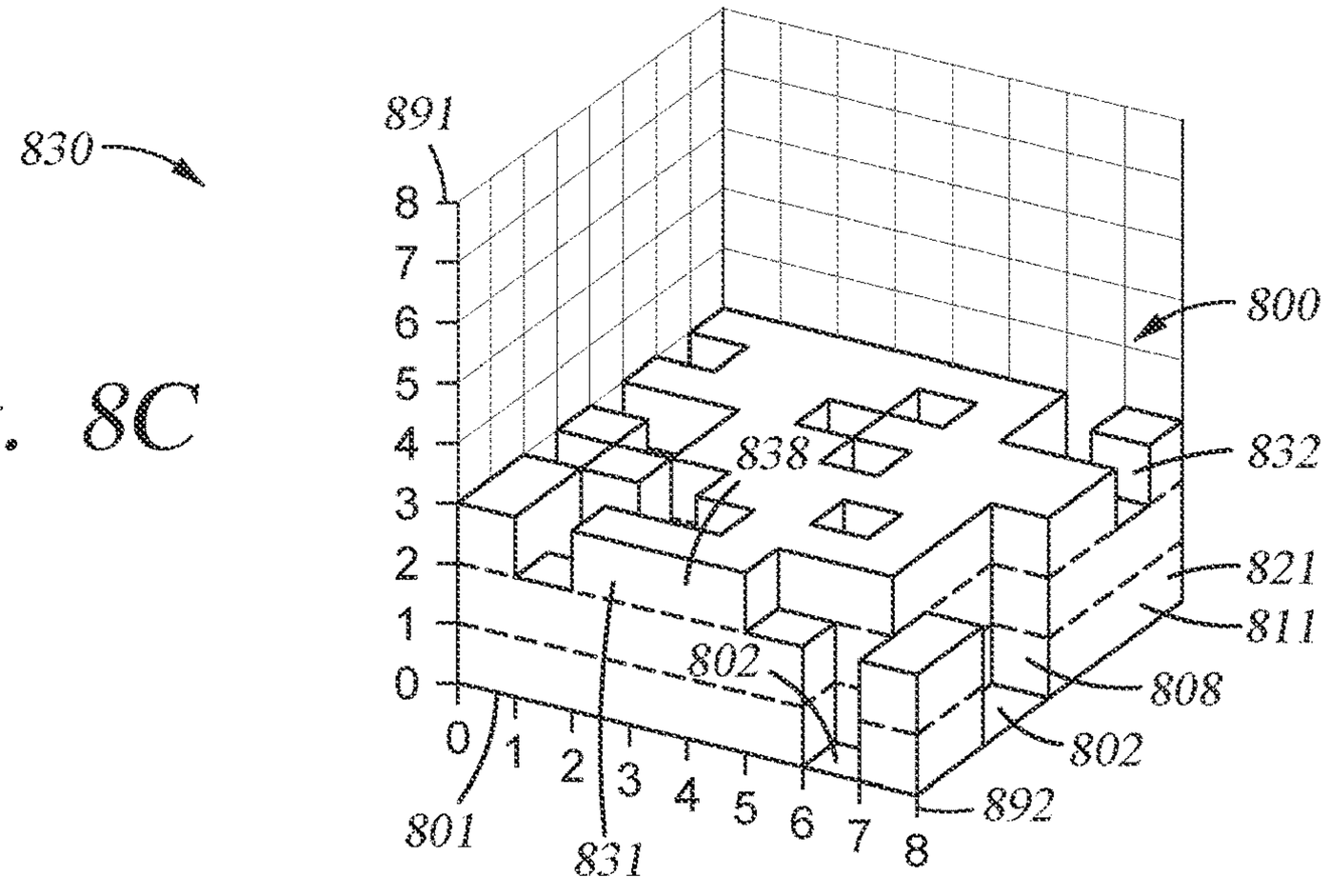

Fig. 8C

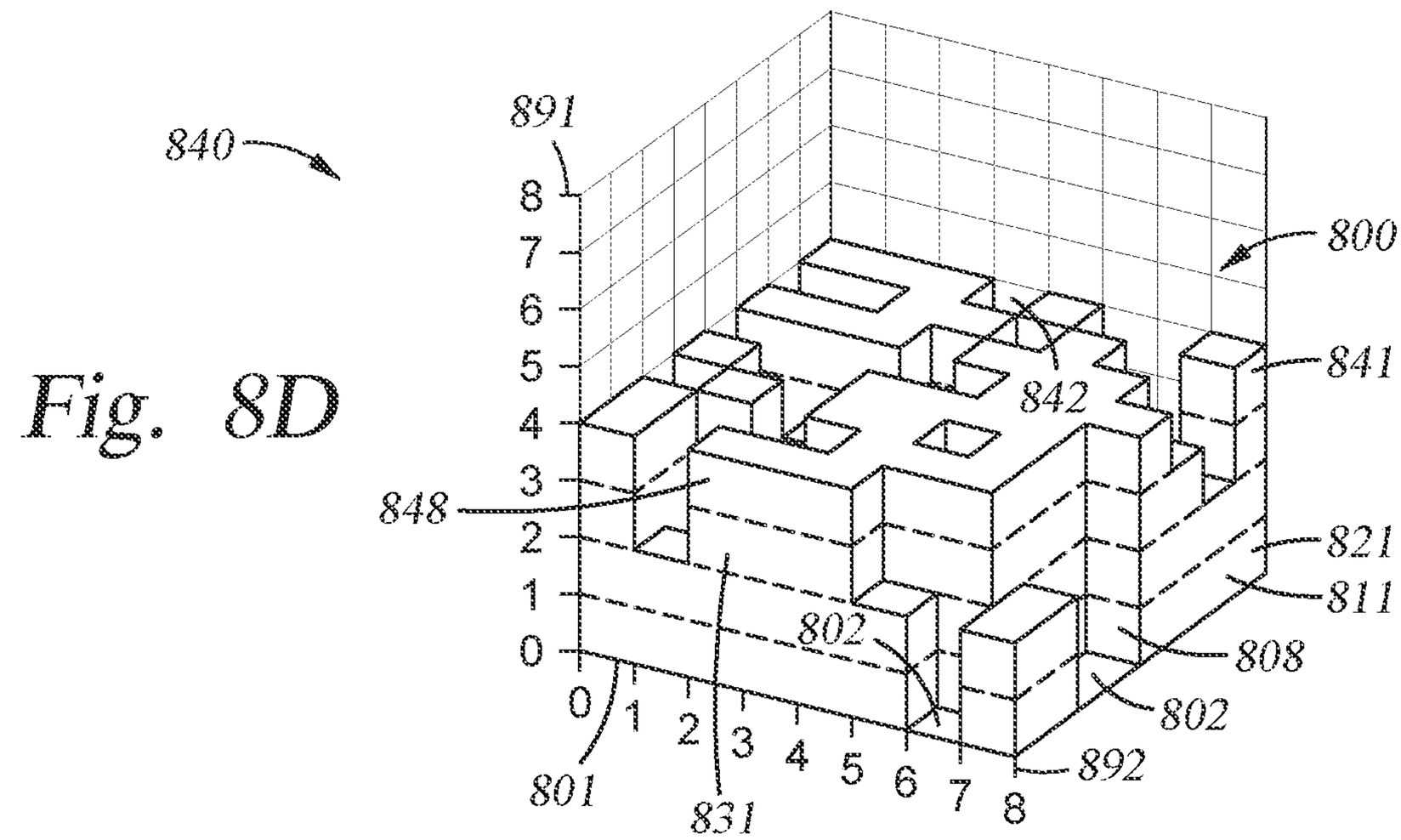
840
891
800
841
842
848
821
811
802
808
802
892
801
831
0
1
2
3
4
5
6
7
8

Fig. 8D

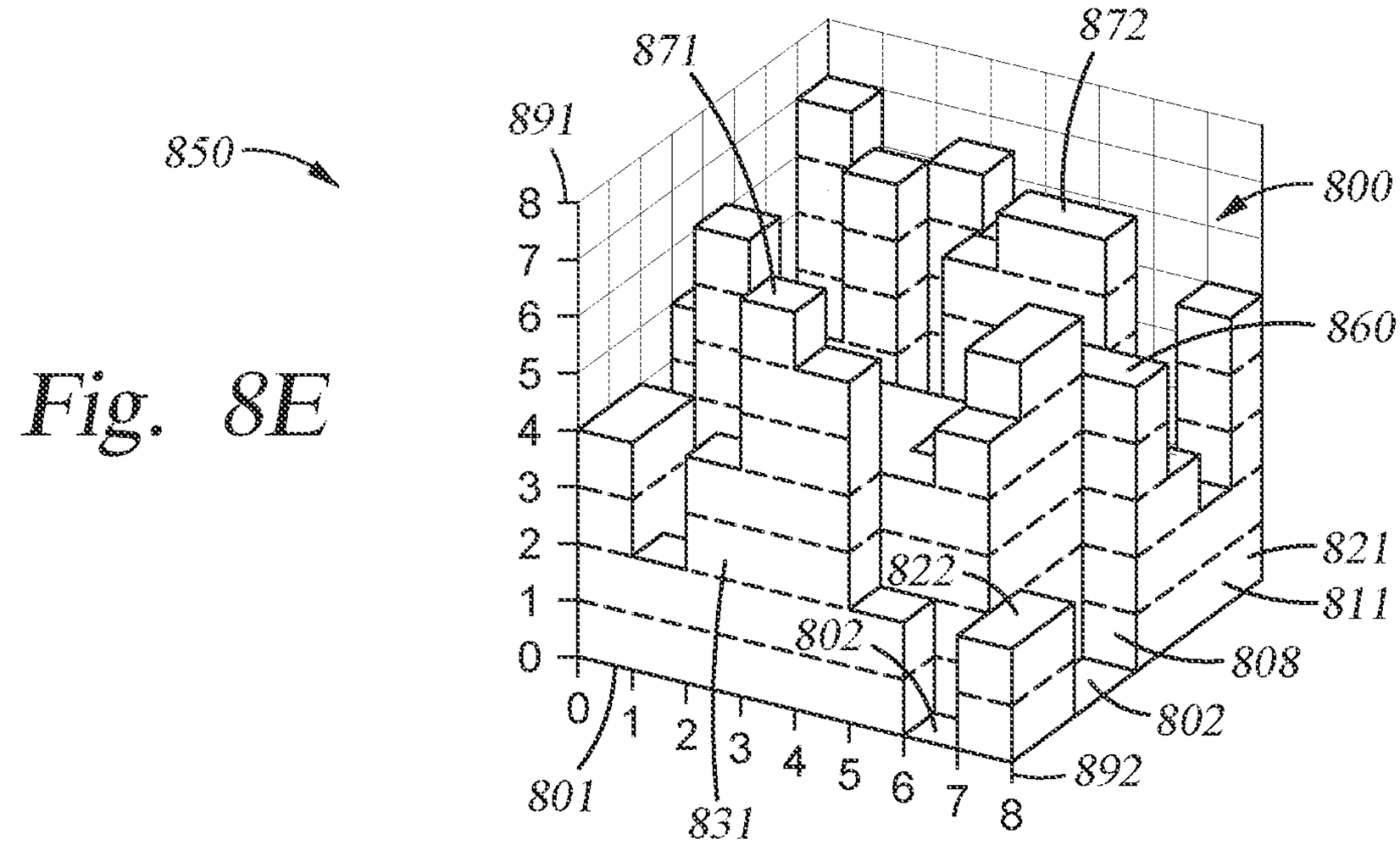
850
871
872
891
800
860
821
822
811
802
808
802
892
801
831
0
1
2
3
4
5
6
7
8

Fig. 8E

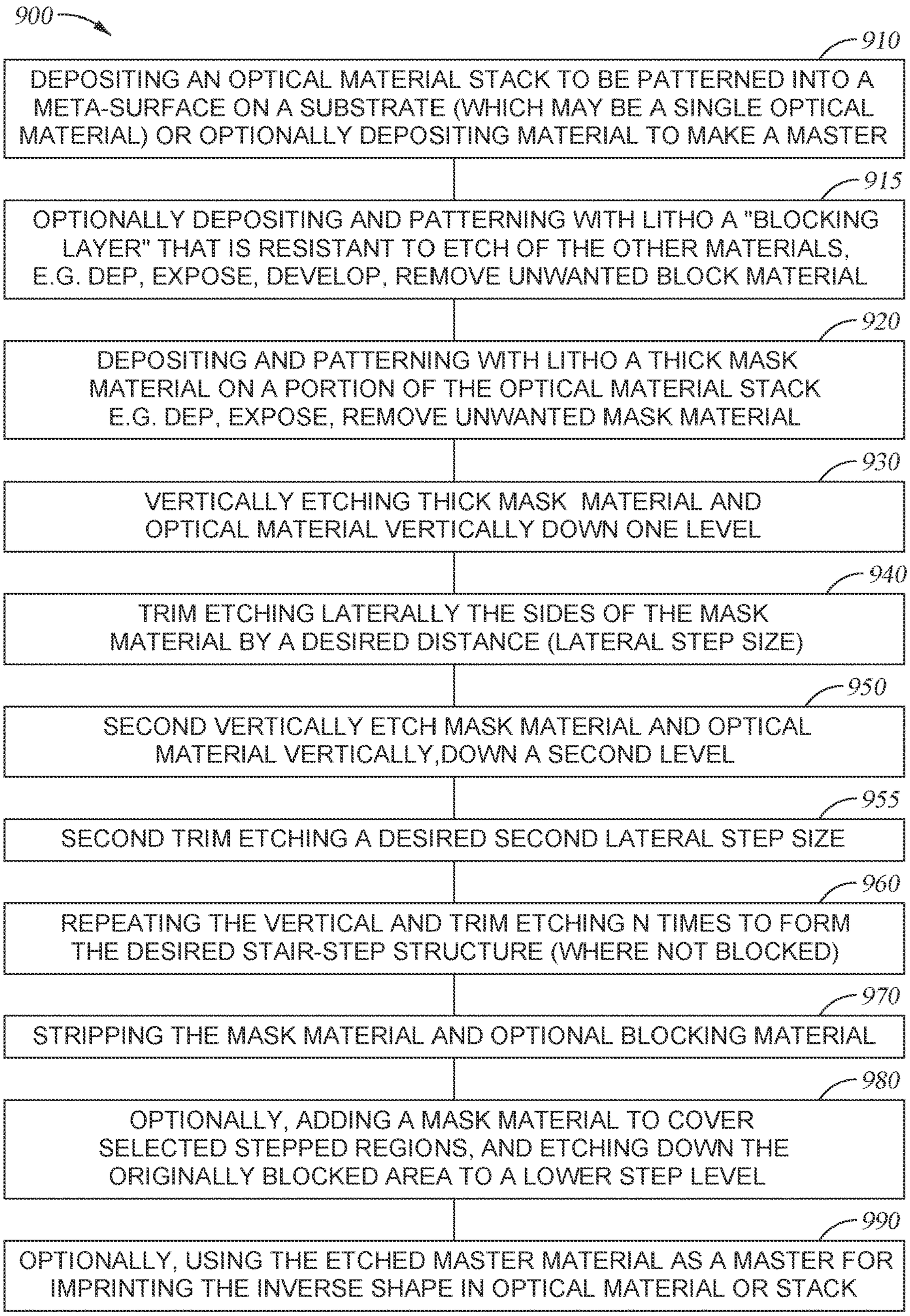
900
910
DEPOSITING AN OPTICAL MATERIAL STACK TO BE PATTERNED INTO A META-SURFACE ON A SUBSTRATE (WHICH MAY BE A SINGLE OPTICAL MATERIAL) OR OPTIONALLY DEPOSITING MATERIAL TO MAKE A MASTER
915
OPTIONALLY DEPOSITING AND PATTERNING WITH LITHO A "BLOCKING LAYER" THAT IS RESISTANT TO ETCH OF THE OTHER MATERIALS, E.G. DEP, EXPOSE, DEVELOP, REMOVE UNWANTED BLOCK MATERIAL
920
DEPOSITING AND PATTERNING WITH LITHO A THICK MASK MATERIAL ON A PORTION OF THE OPTICAL MATERIAL STACK E.G. DEP, EXPOSE, REMOVE UNWANTED MASK MATERIAL
930
VERTICALLY ETCHING THICK MASK MATERIAL AND OPTICAL MATERIAL VERTICALLY DOWN ONE LEVEL
940
TRIM ETCHING LATERALLY THE SIDES OF THE MASK MATERIAL BY A DESIRED DISTANCE (LATERAL STEP SIZE)
950
SECOND VERTICALLY ETCH MASK MATERIAL AND OPTICAL MATERIAL VERTICALLY,DOWN A SECOND LEVEL
955
SECOND TRIM ETCHING A DESIRED SECOND LATERAL STEP SIZE
960
REPEATING THE VERTICAL AND TRIM ETCHING N TIMES TO FORM THE DESIRED STAIR-STEP STRUCTURE (WHERE NOT BLOCKED)
970
STRIPPING THE MASK MATERIAL AND OPTIONAL BLOCKING MATERIAL
980
OPTIONALLY, ADDING A MASK MATERIAL TO COVER SELECTED STEPPED REGIONS, AND ETCHING DOWN THE ORIGINALLY BLOCKED AREA TO A LOWER STEP LEVEL
990
OPTIONALLY, USING THE ETCHED MASTER MATERIAL AS A MASTER FOR IMPRINTING THE INVERSE SHAPE IN OPTICAL MATERIAL OR STACK

Fig. 9

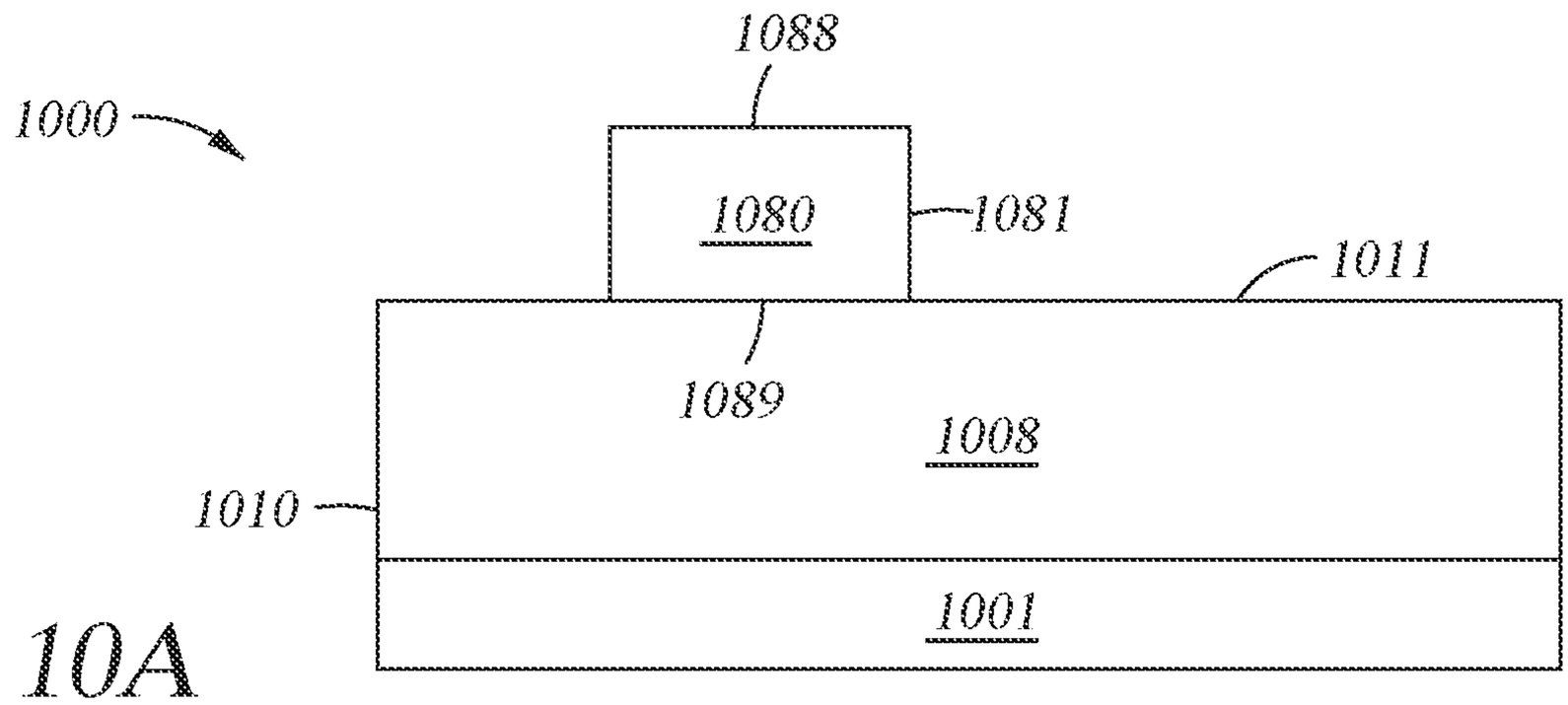

Fig. 10A

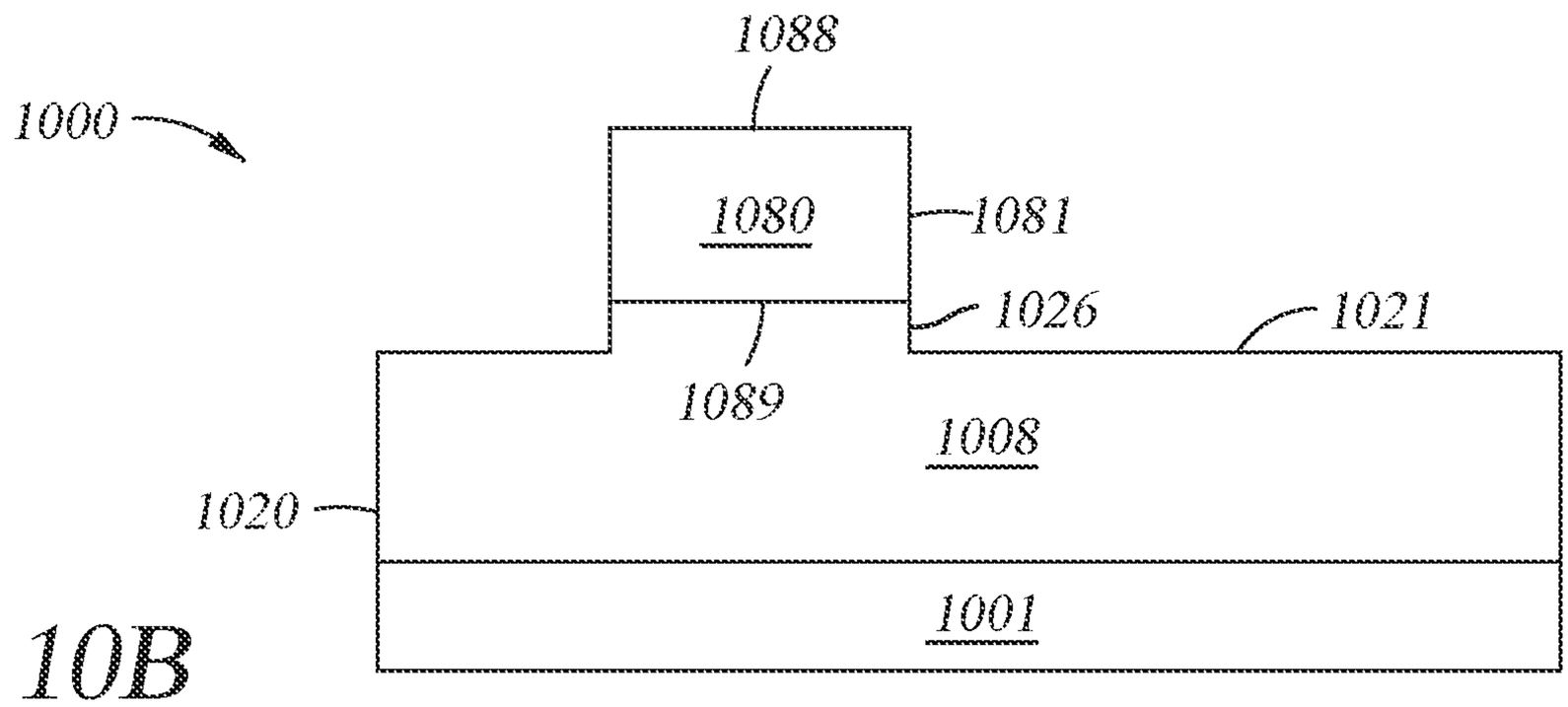

Fig. 10B

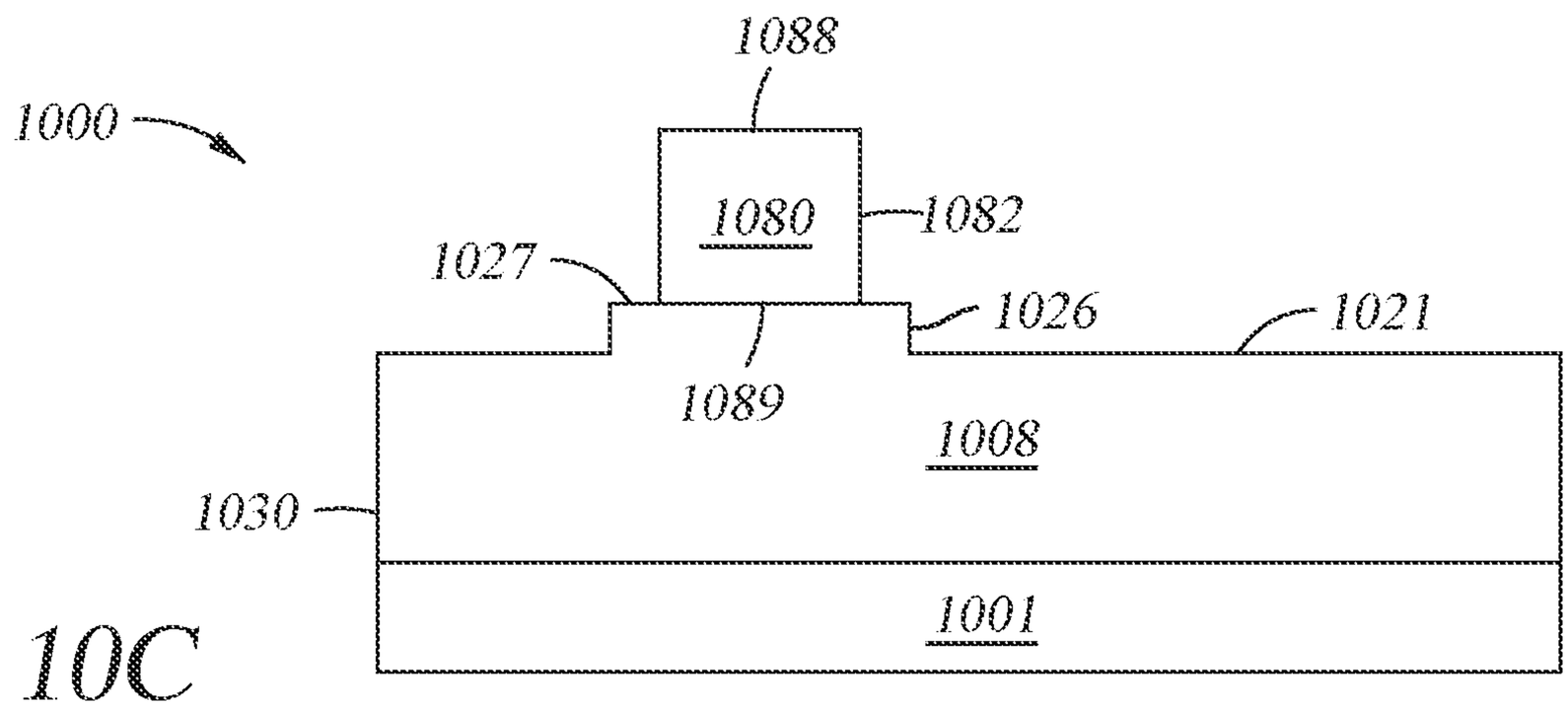

Fig. 10C

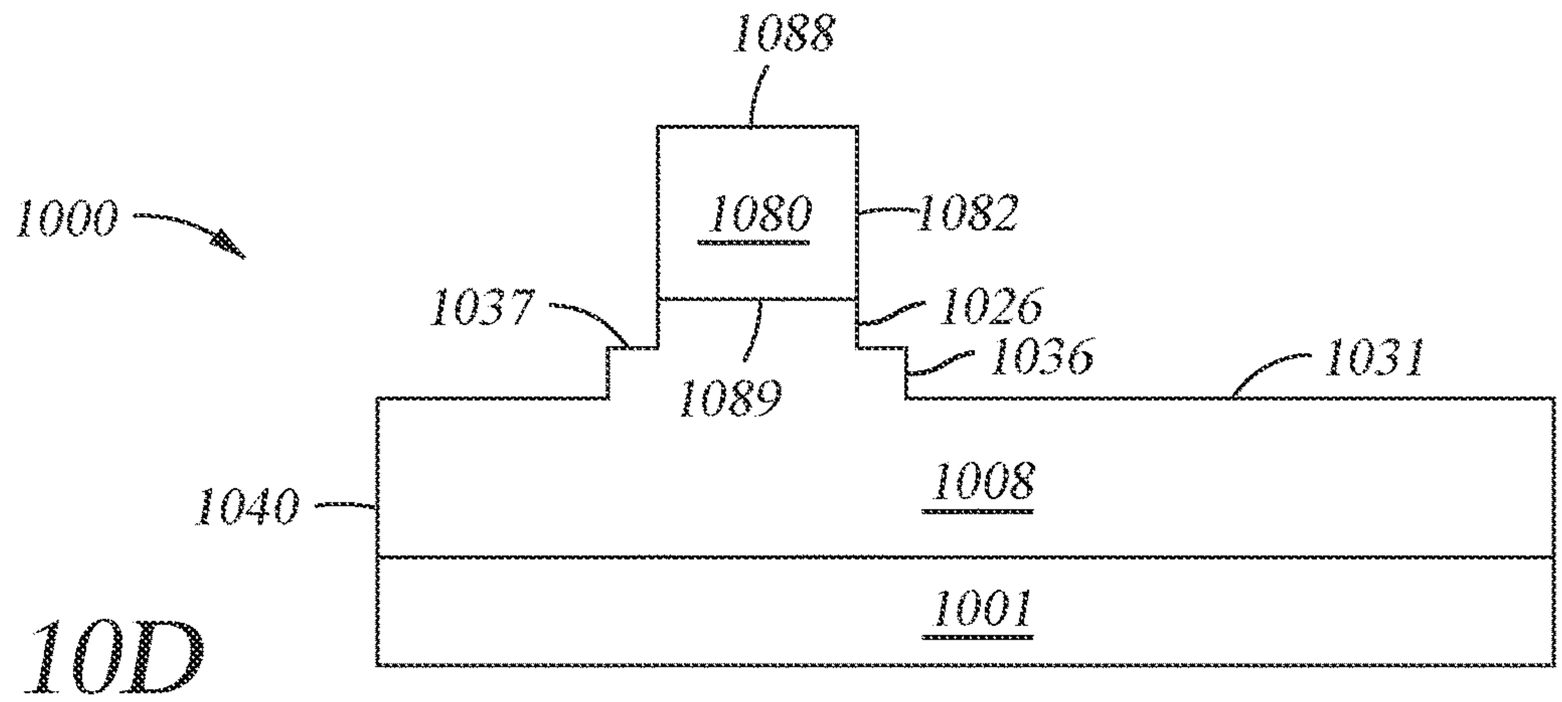

Fig. 10D

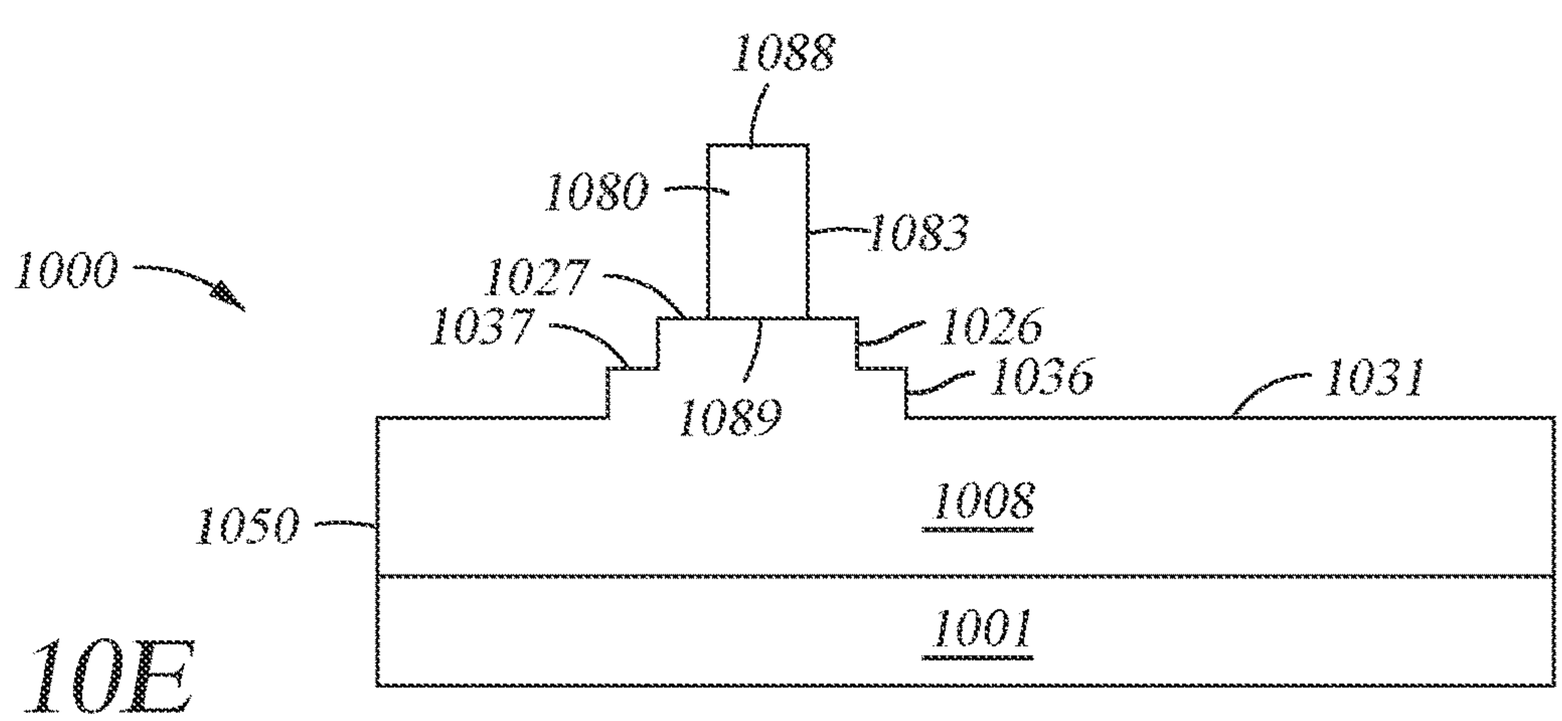

Fig. 10E

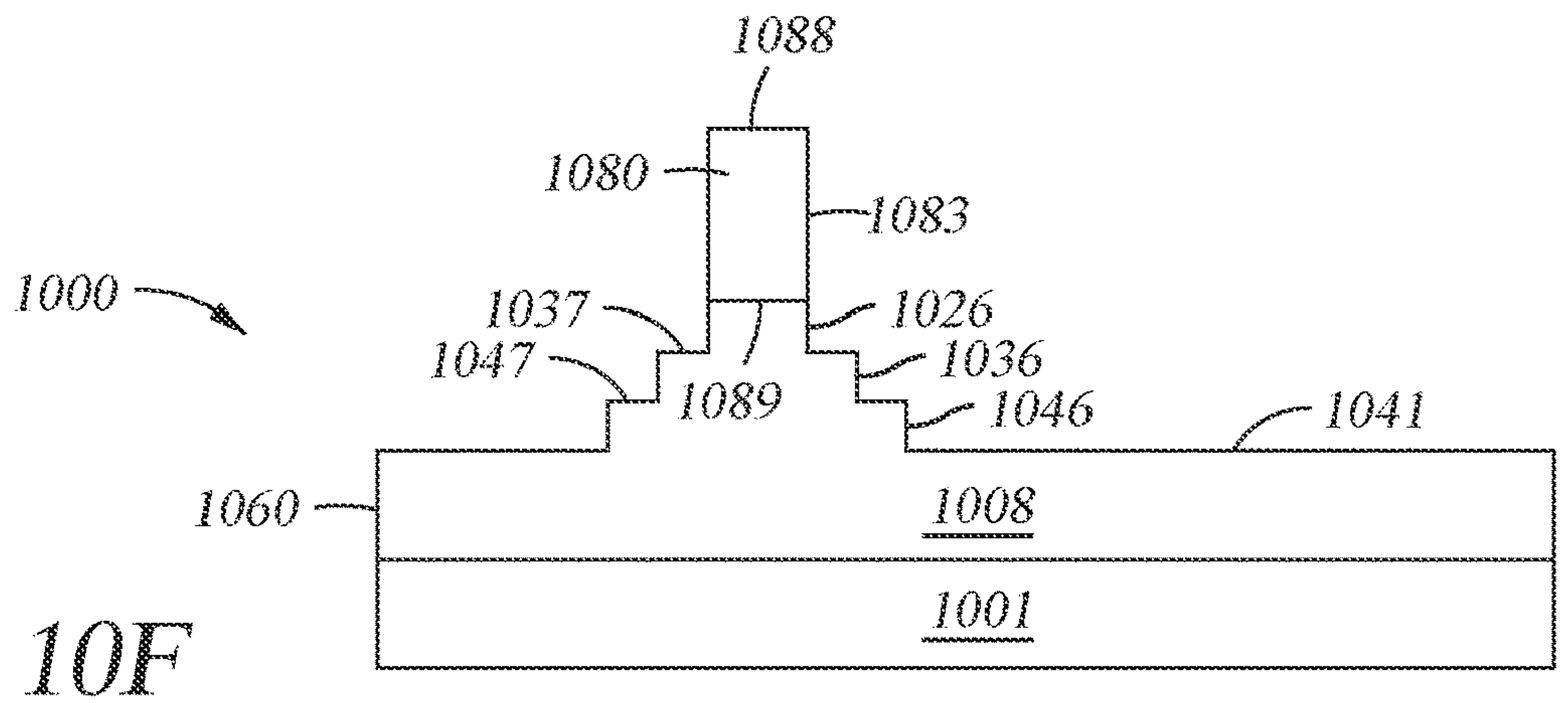

Fig. 10F

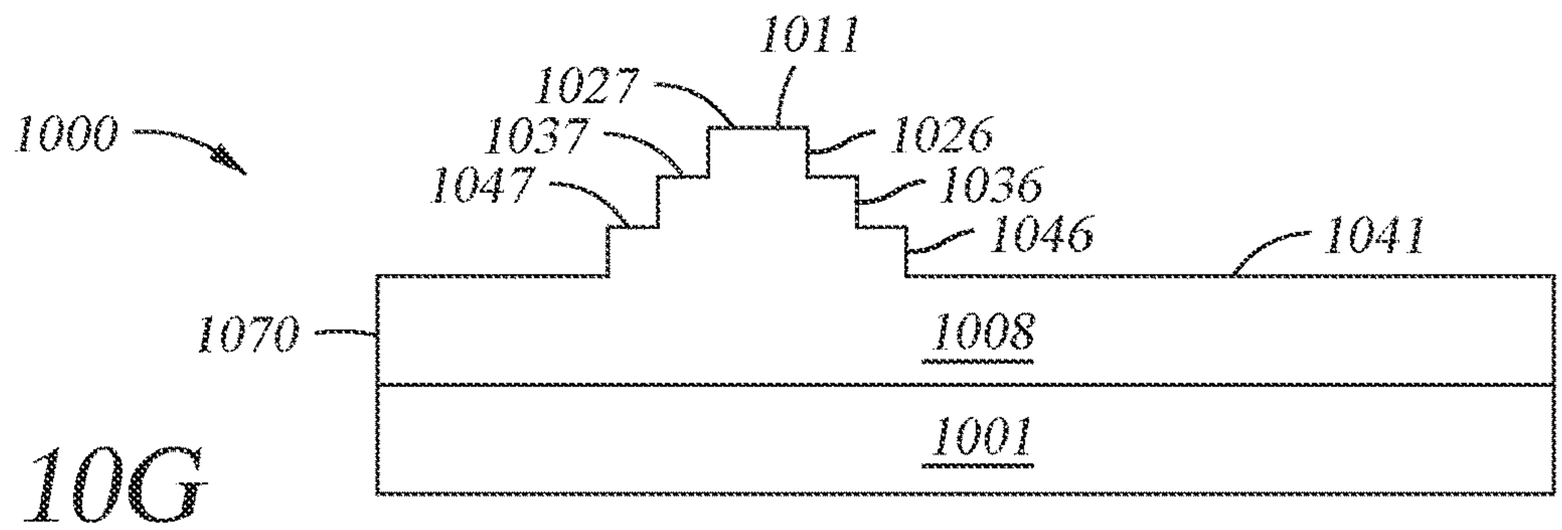

Fig. 10G

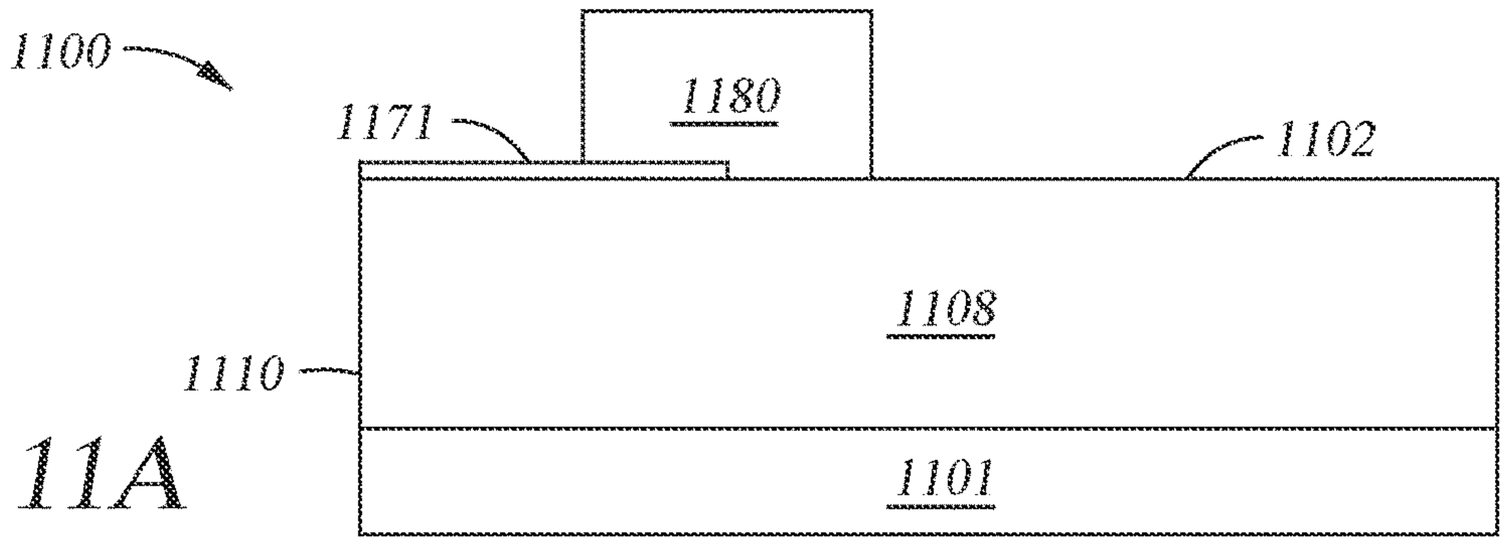

Fig. 11A

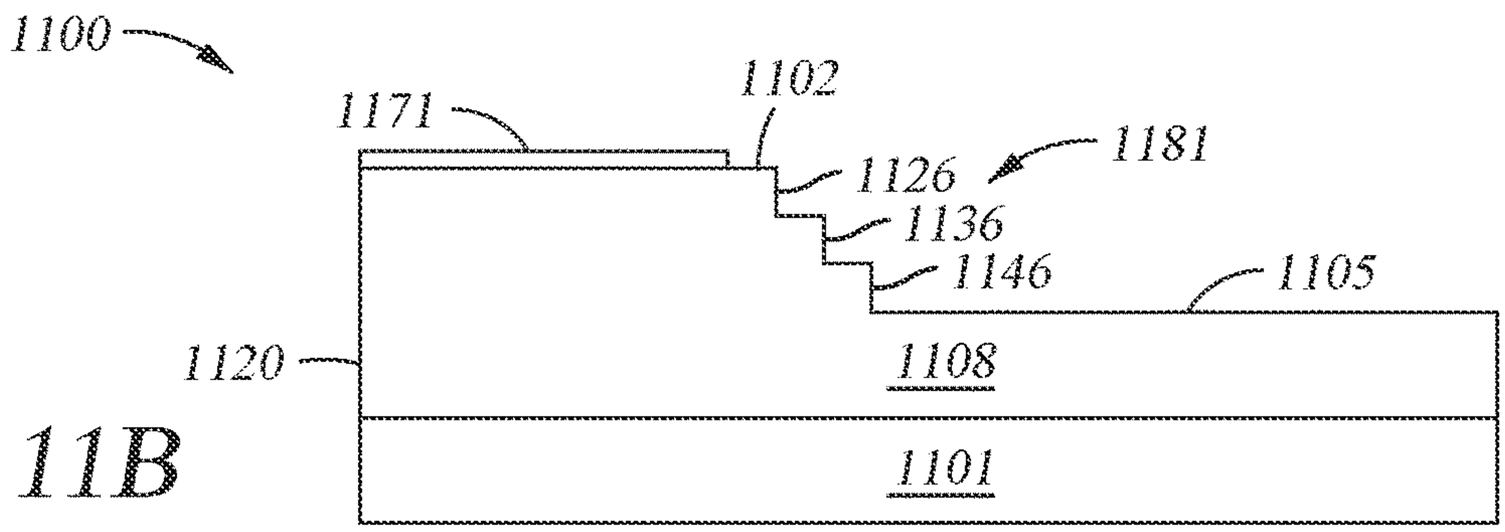

Fig. 11B

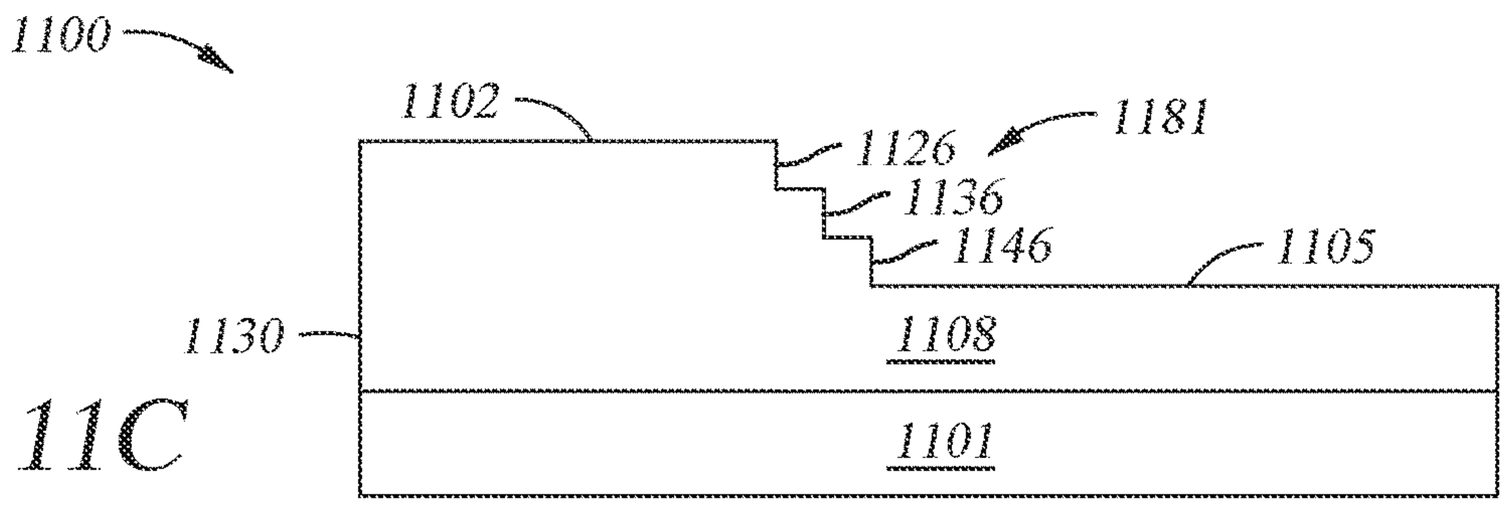

Fig. 11C

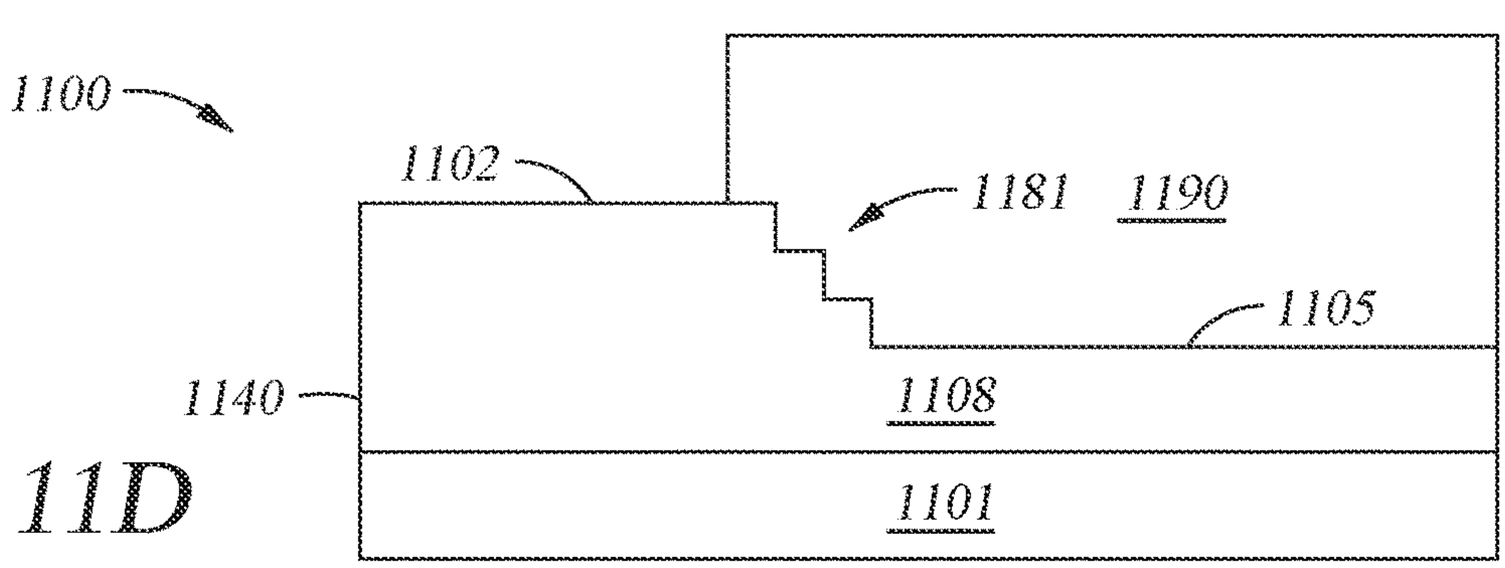

Fig. 11D

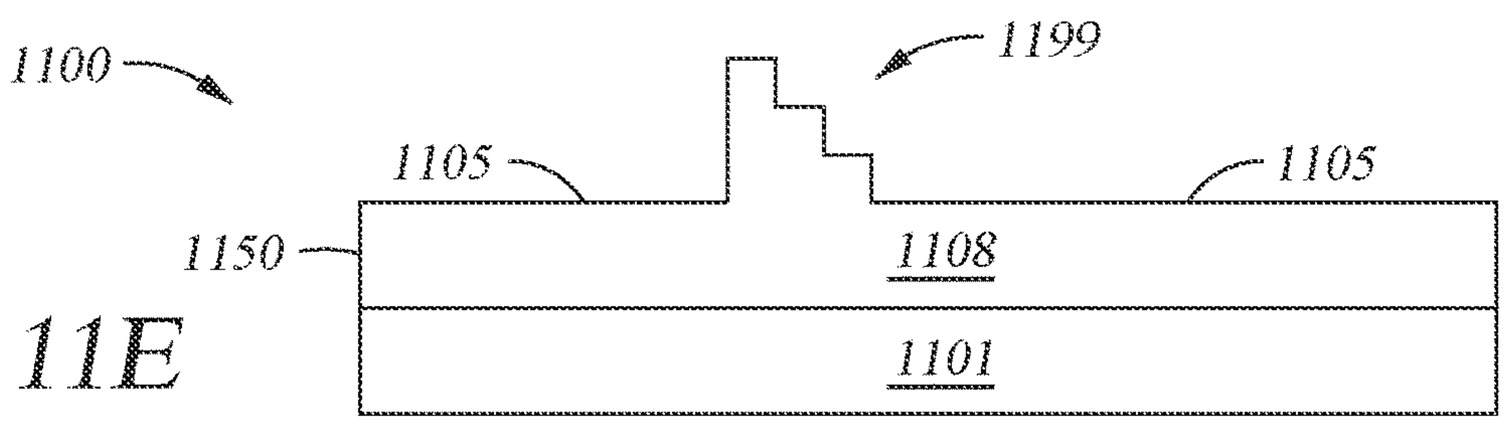

Fig. 11E

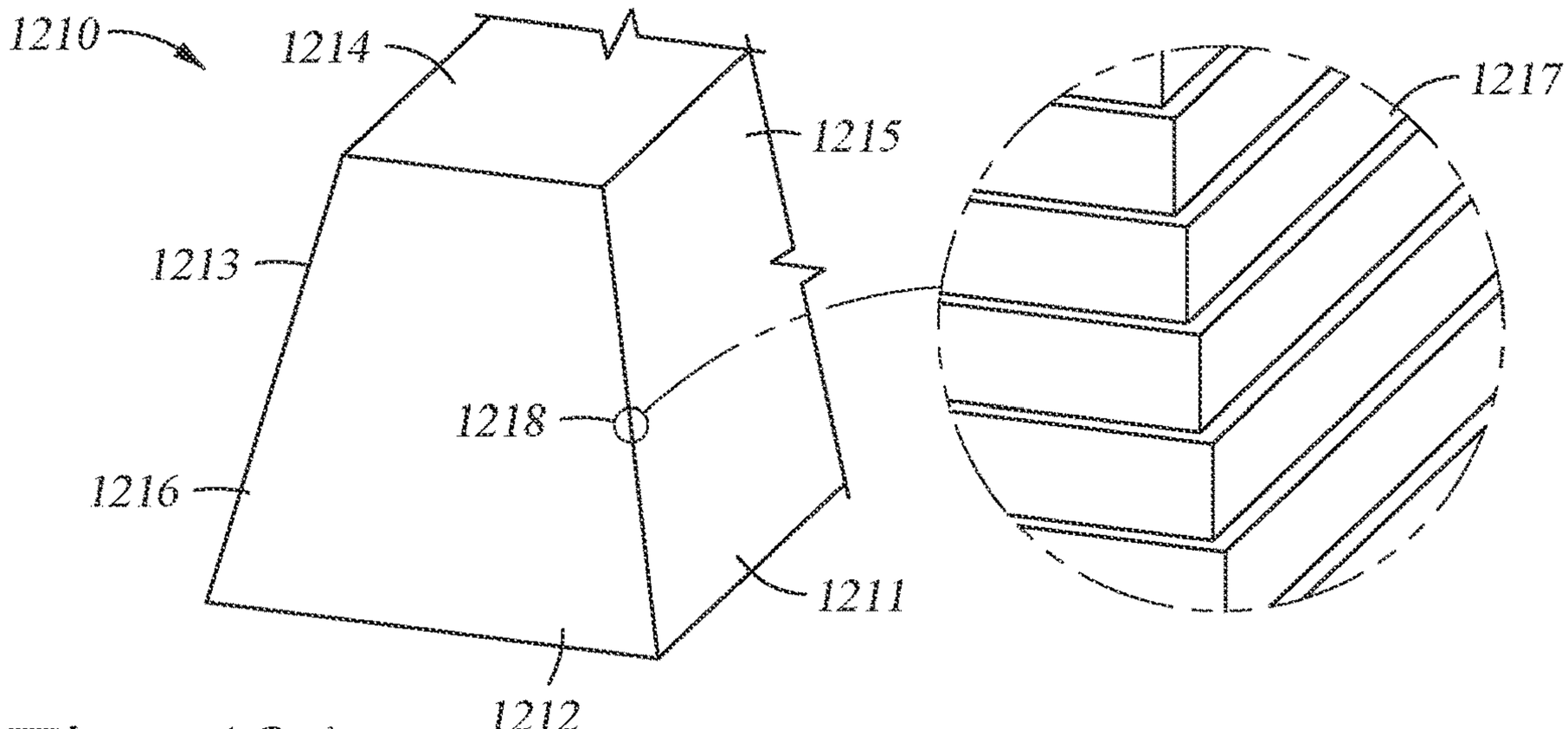

Fig. 12A

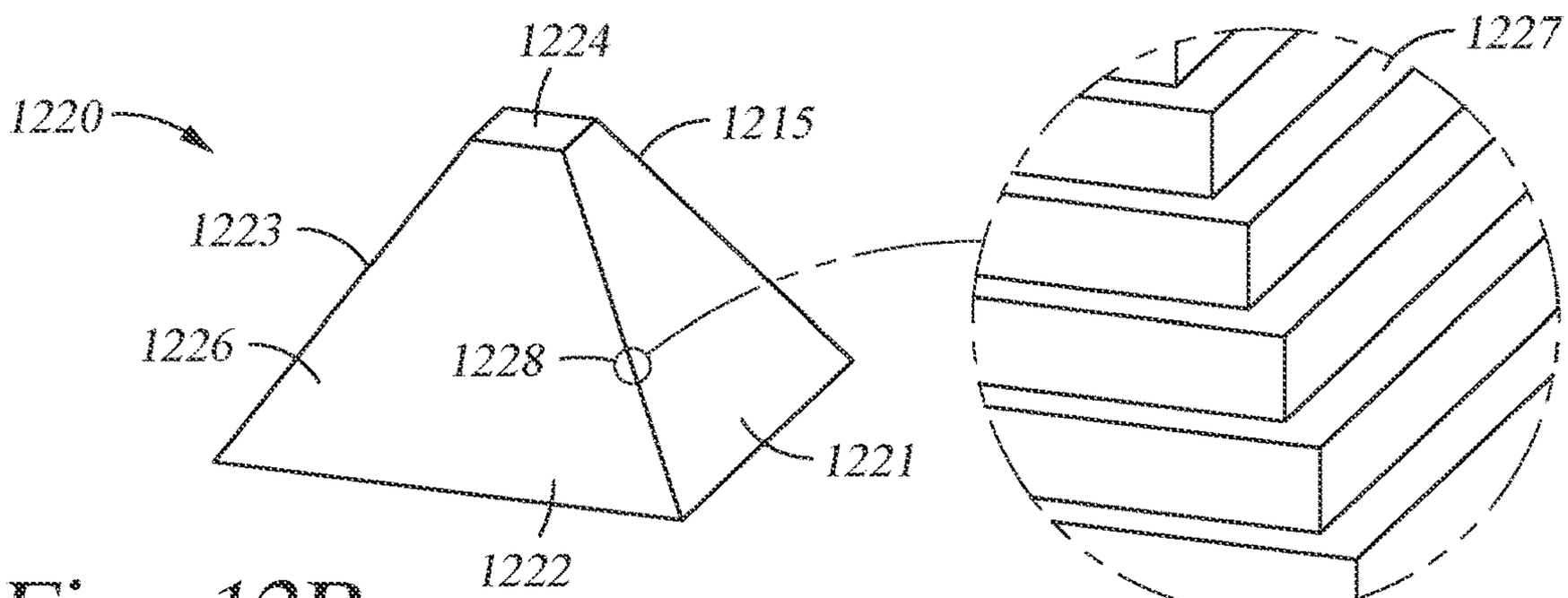

Fig. 12B

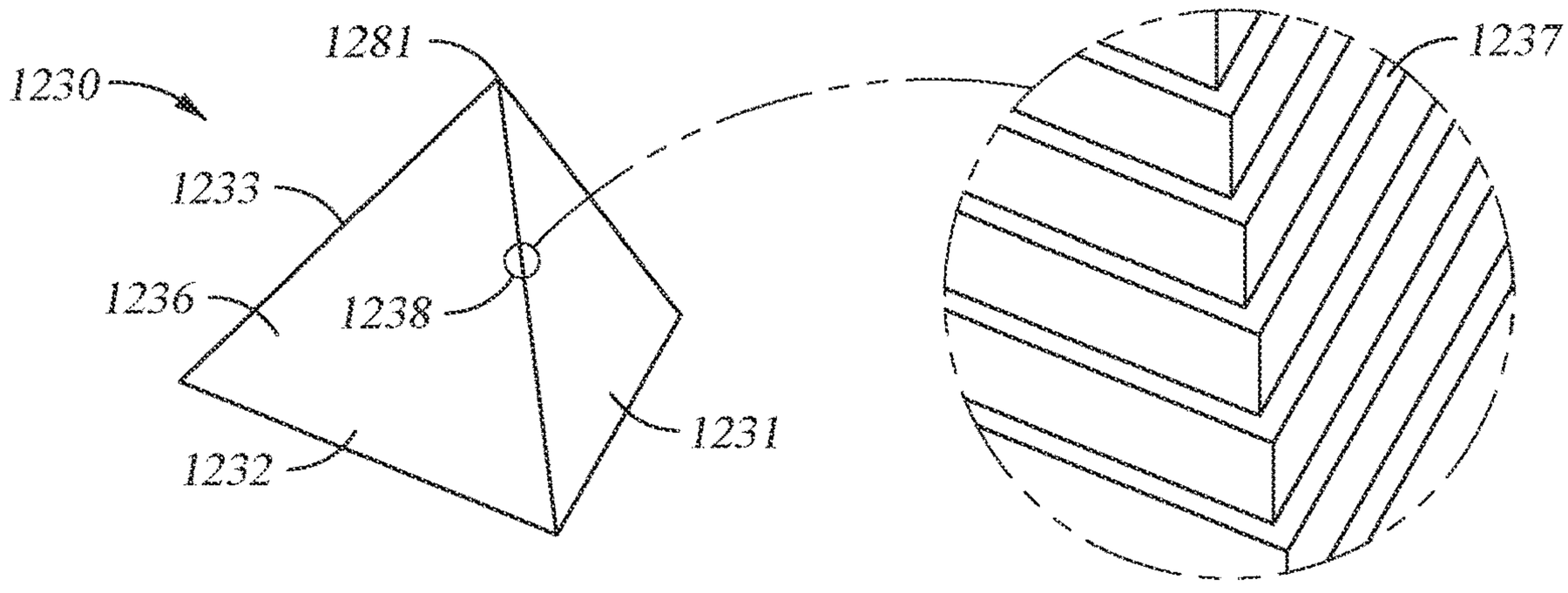

Fig. 12C

Fig. 13A

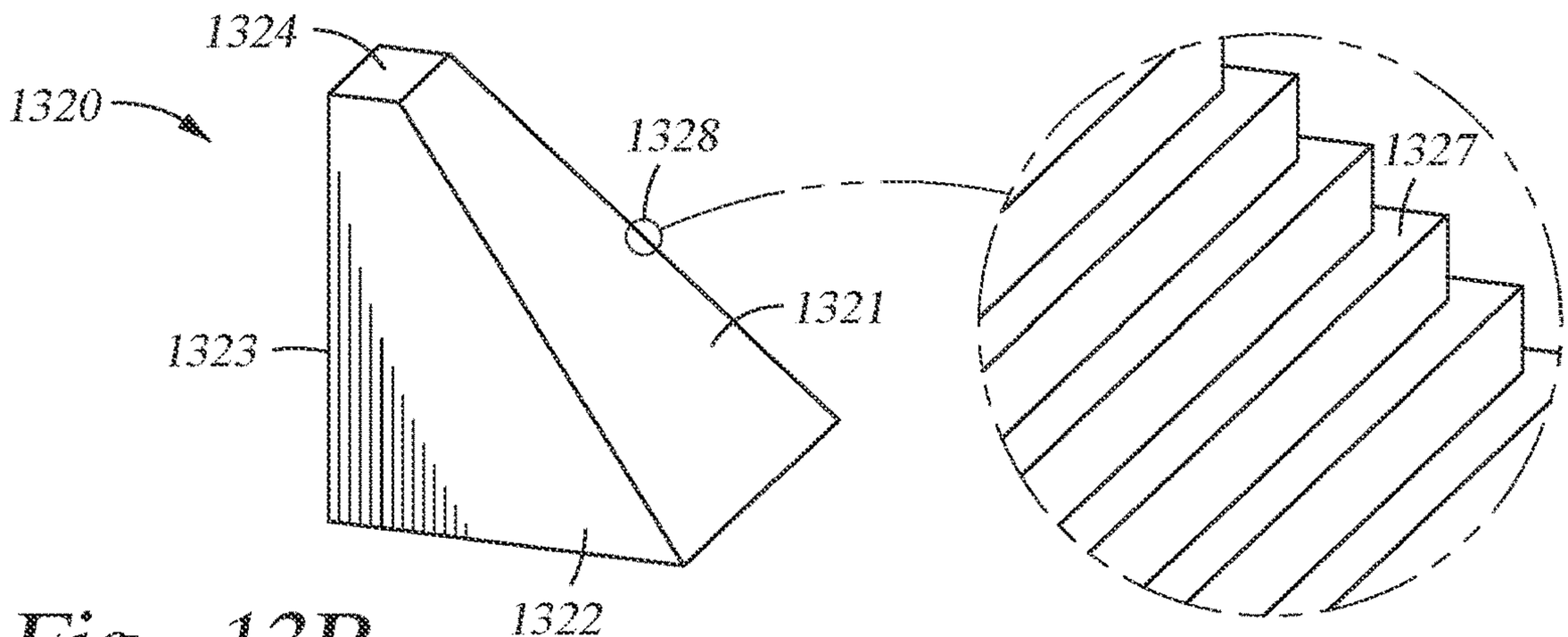

Fig. 13B

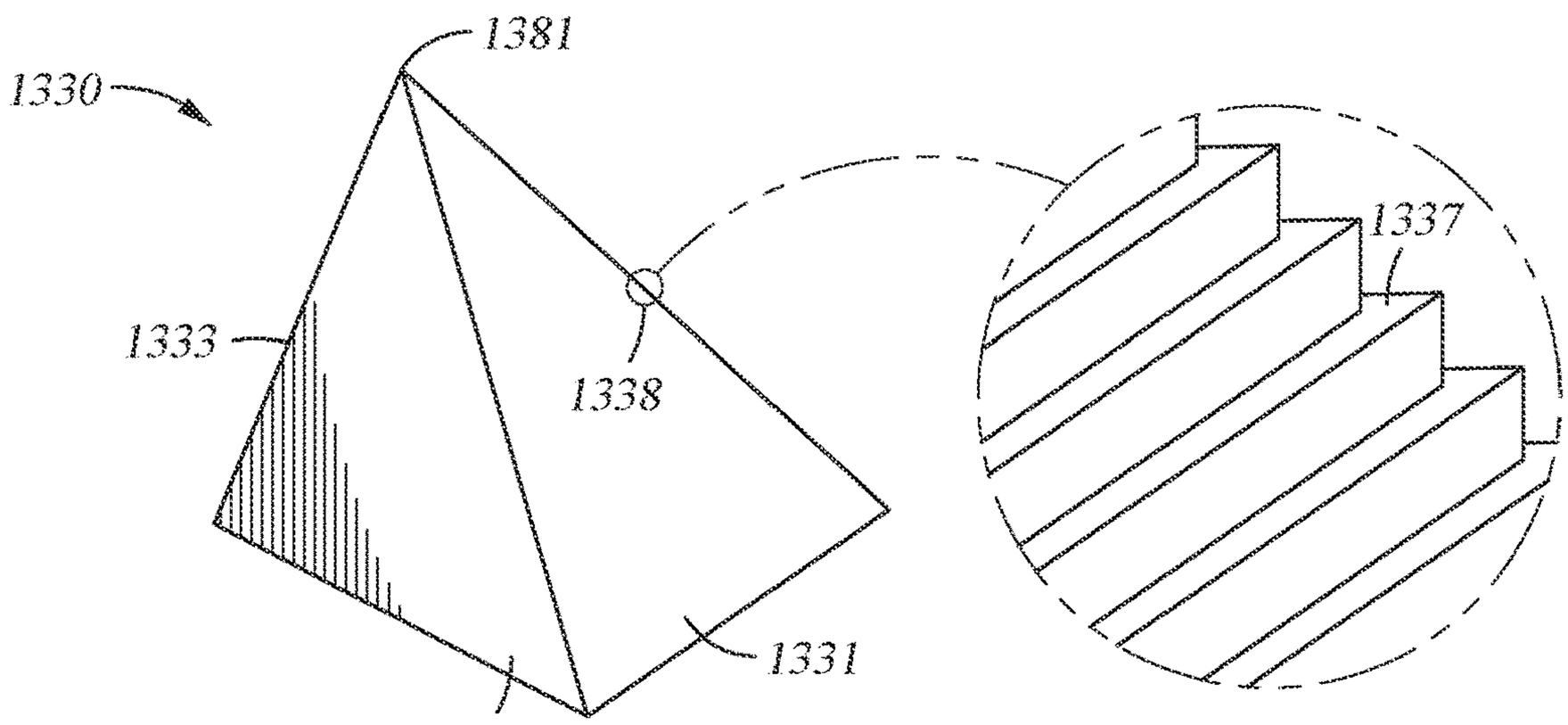

Fig. 13C

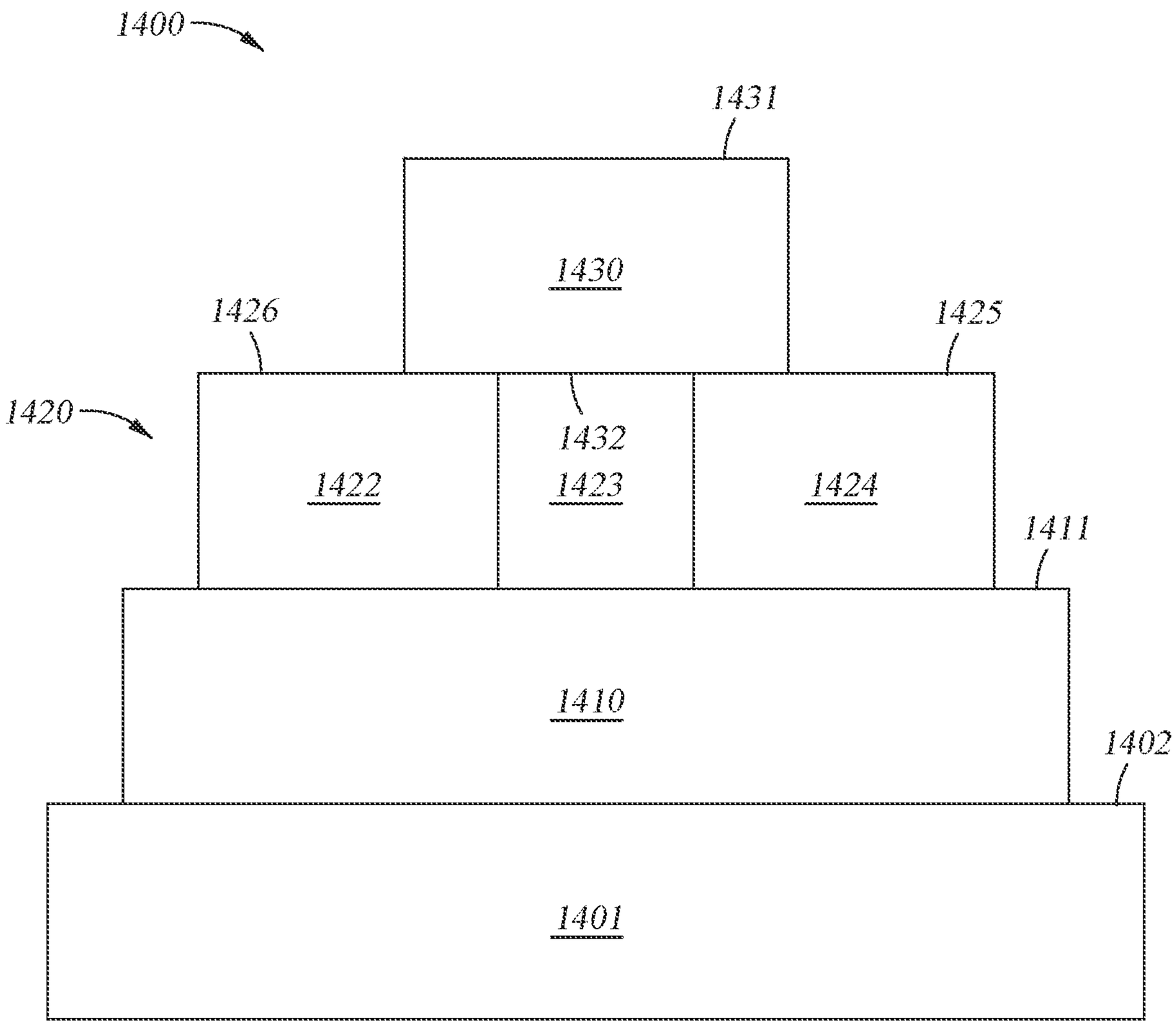
1400
1431
1430
1426
1425
1420
1432
1422
1423
1424
1411
1410
1402
1401

Fig. 14

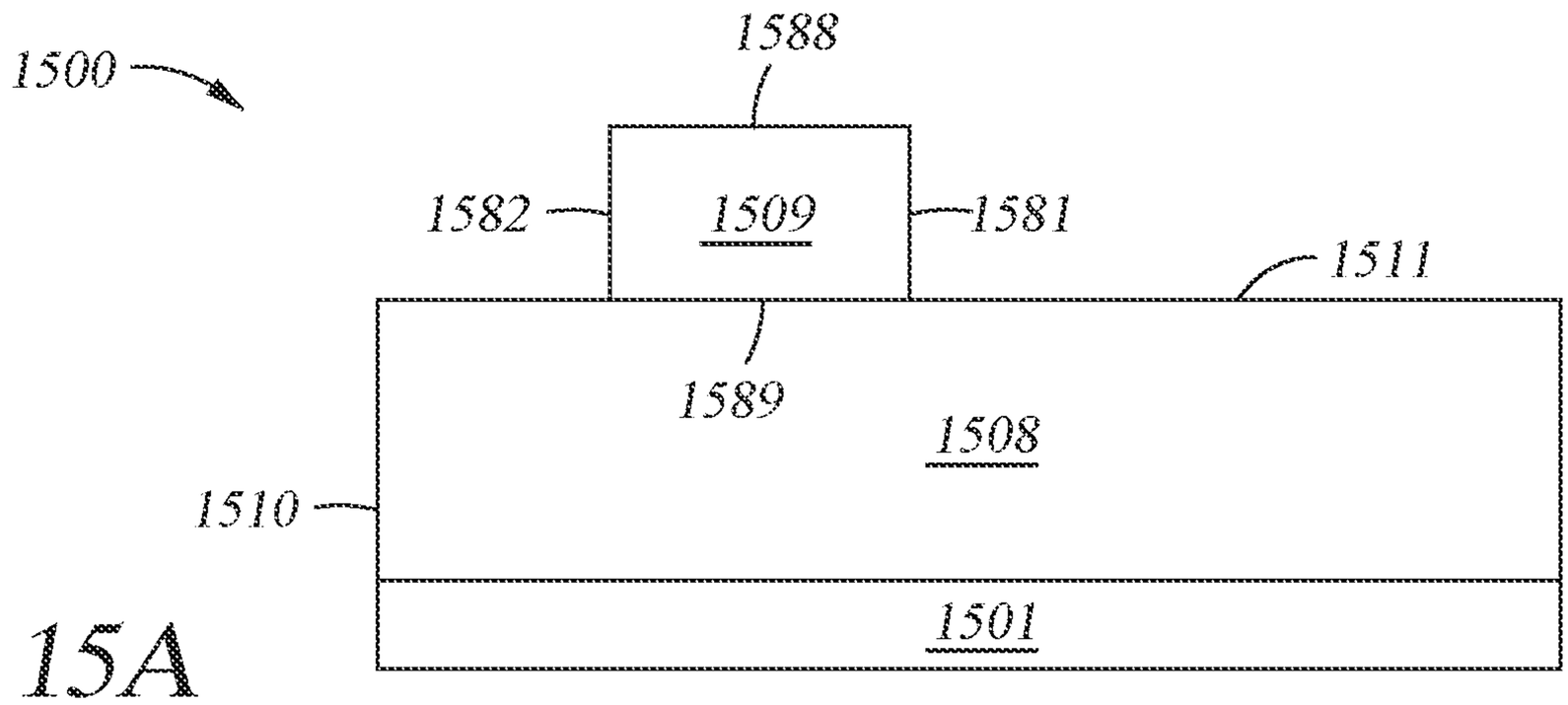

Fig. 15A

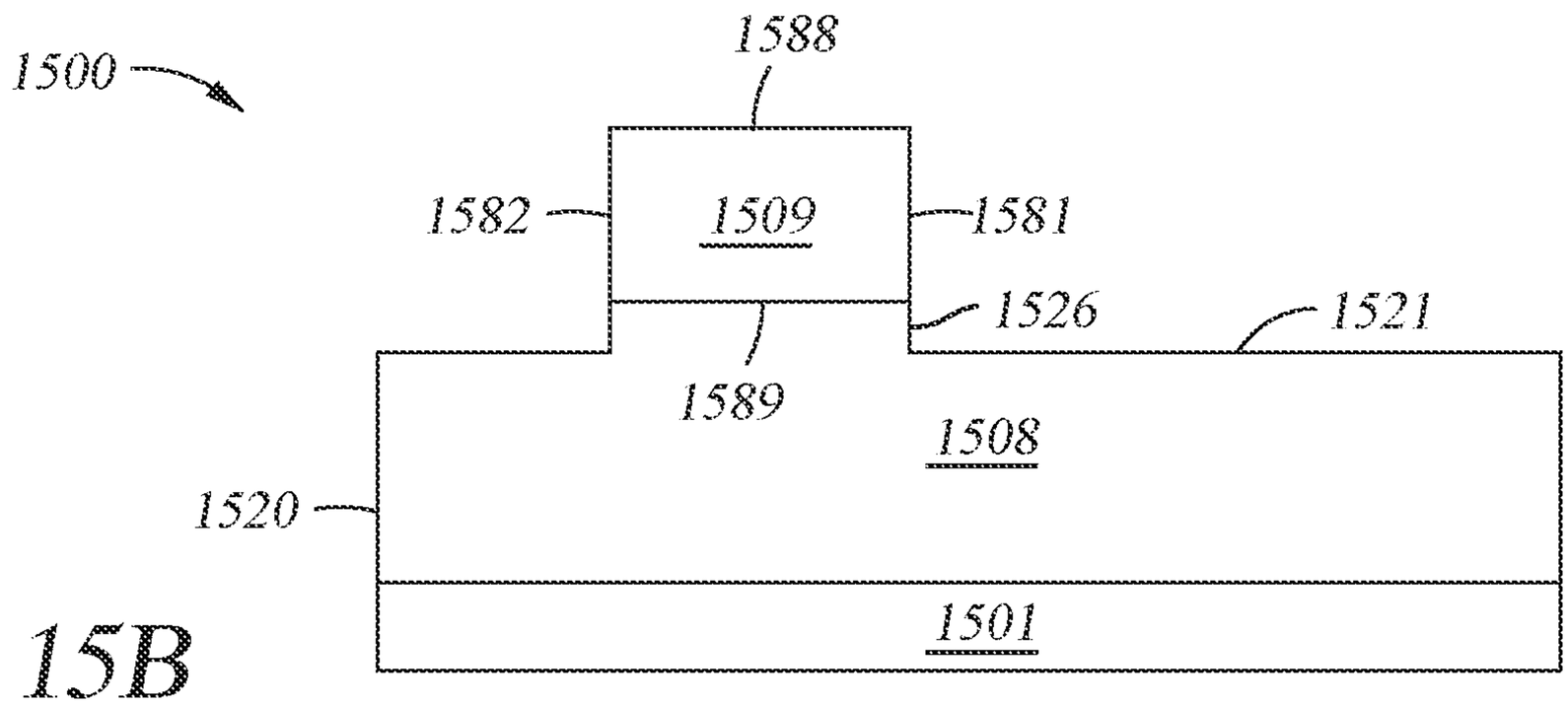

Fig. 15B

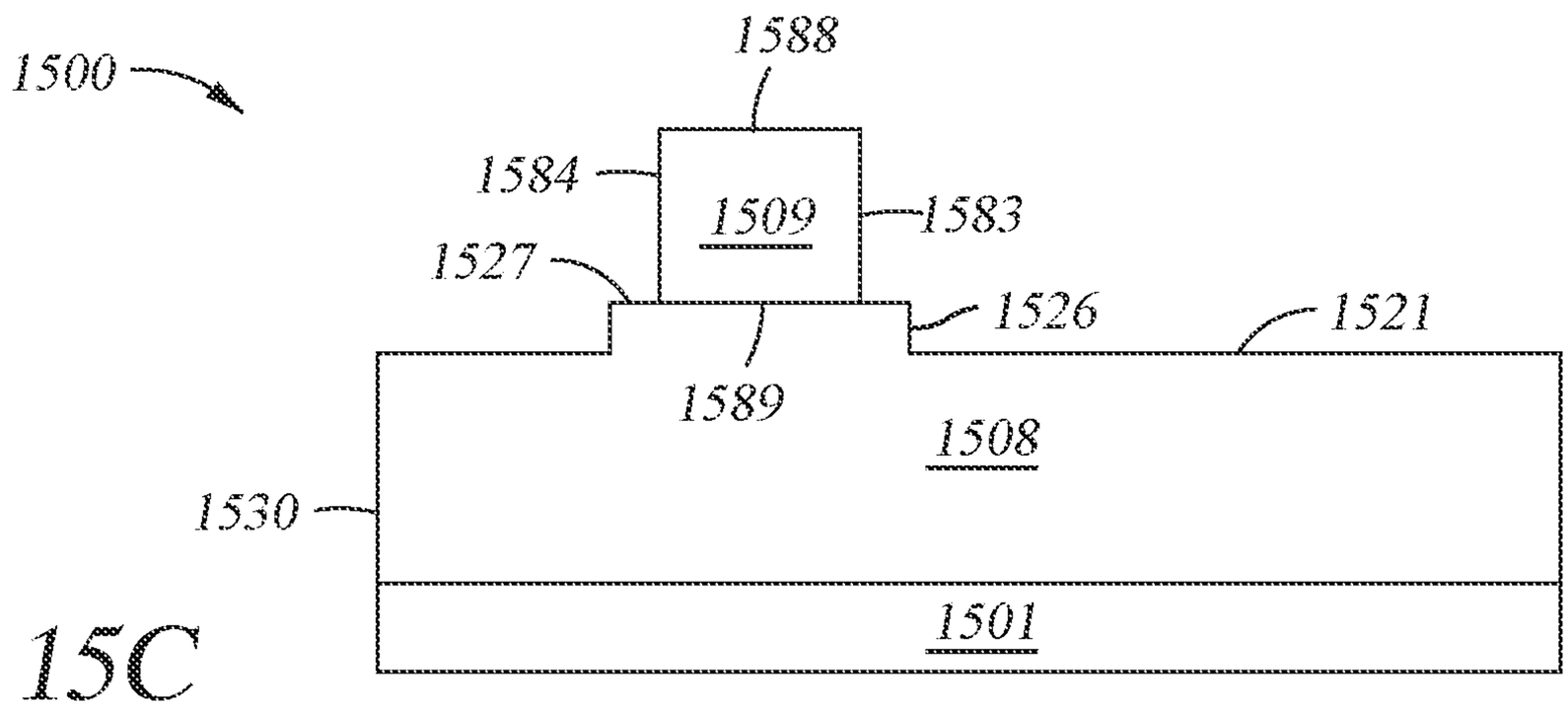

Fig. 15C

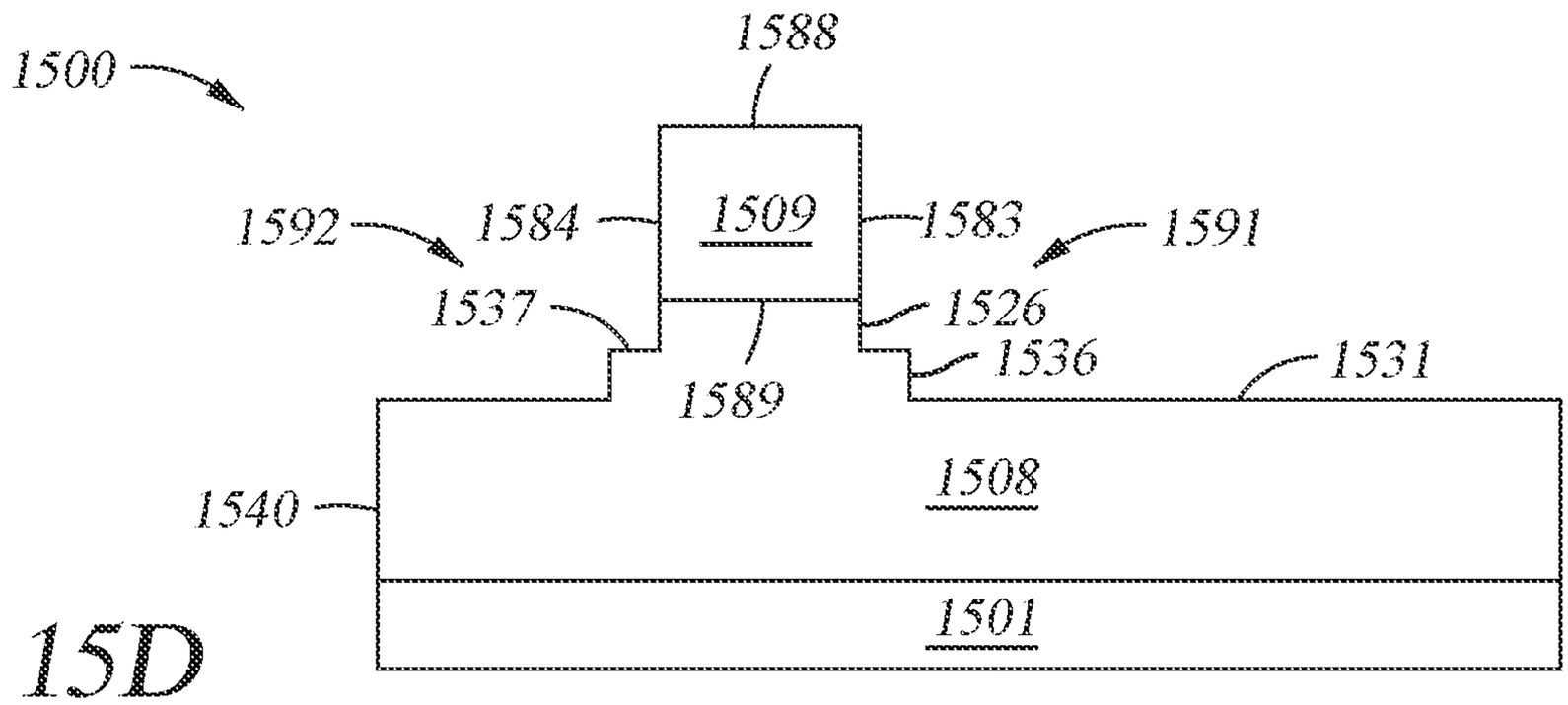

Fig. 15D

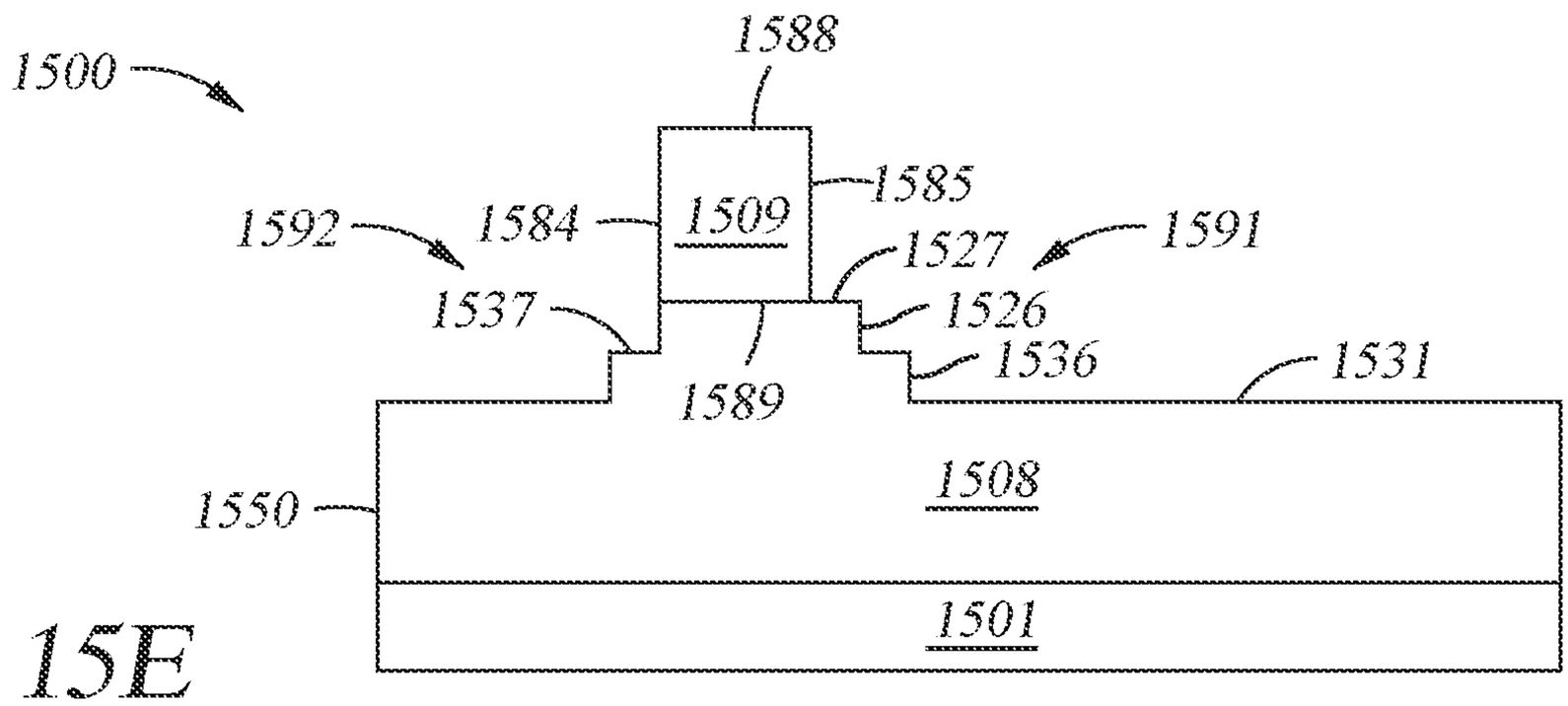

Fig. 15E

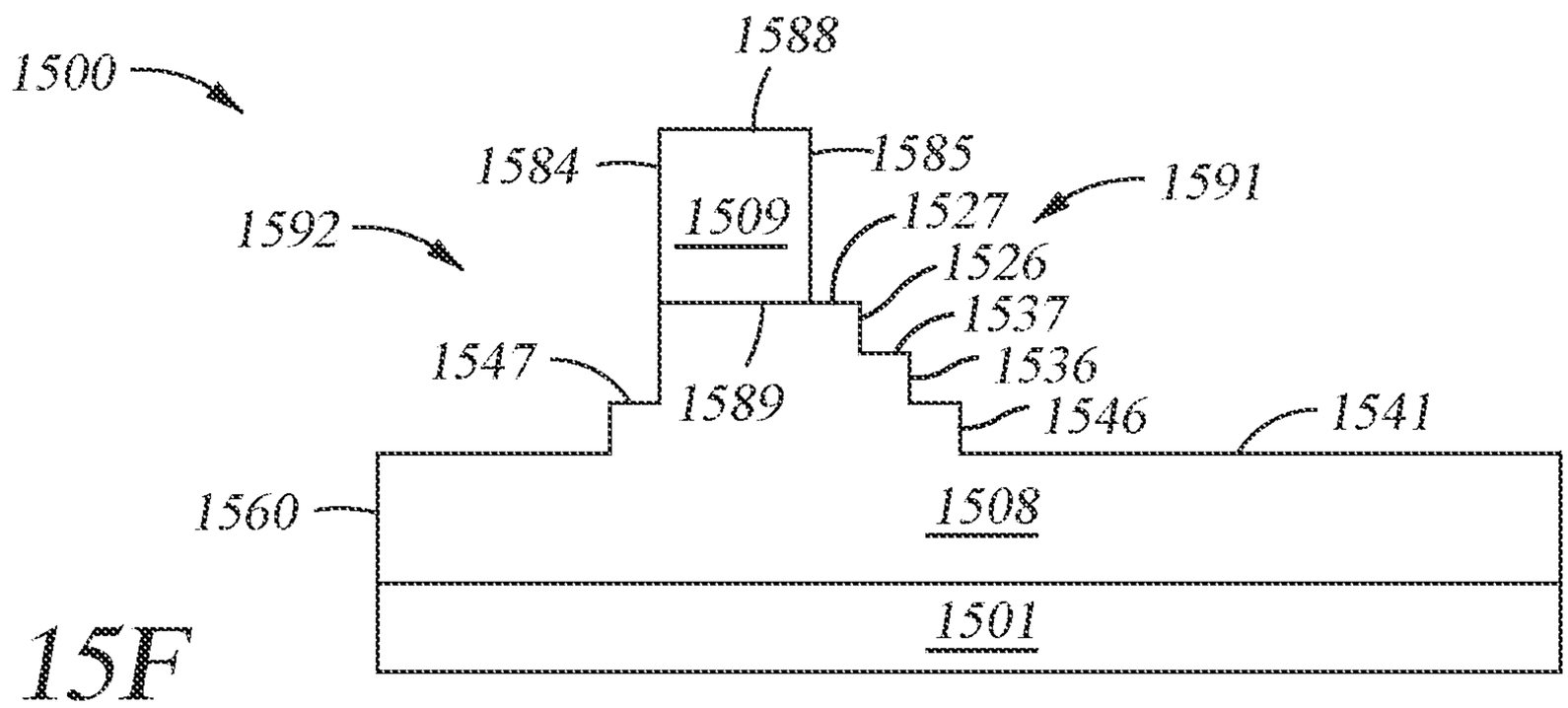

Fig. 15F

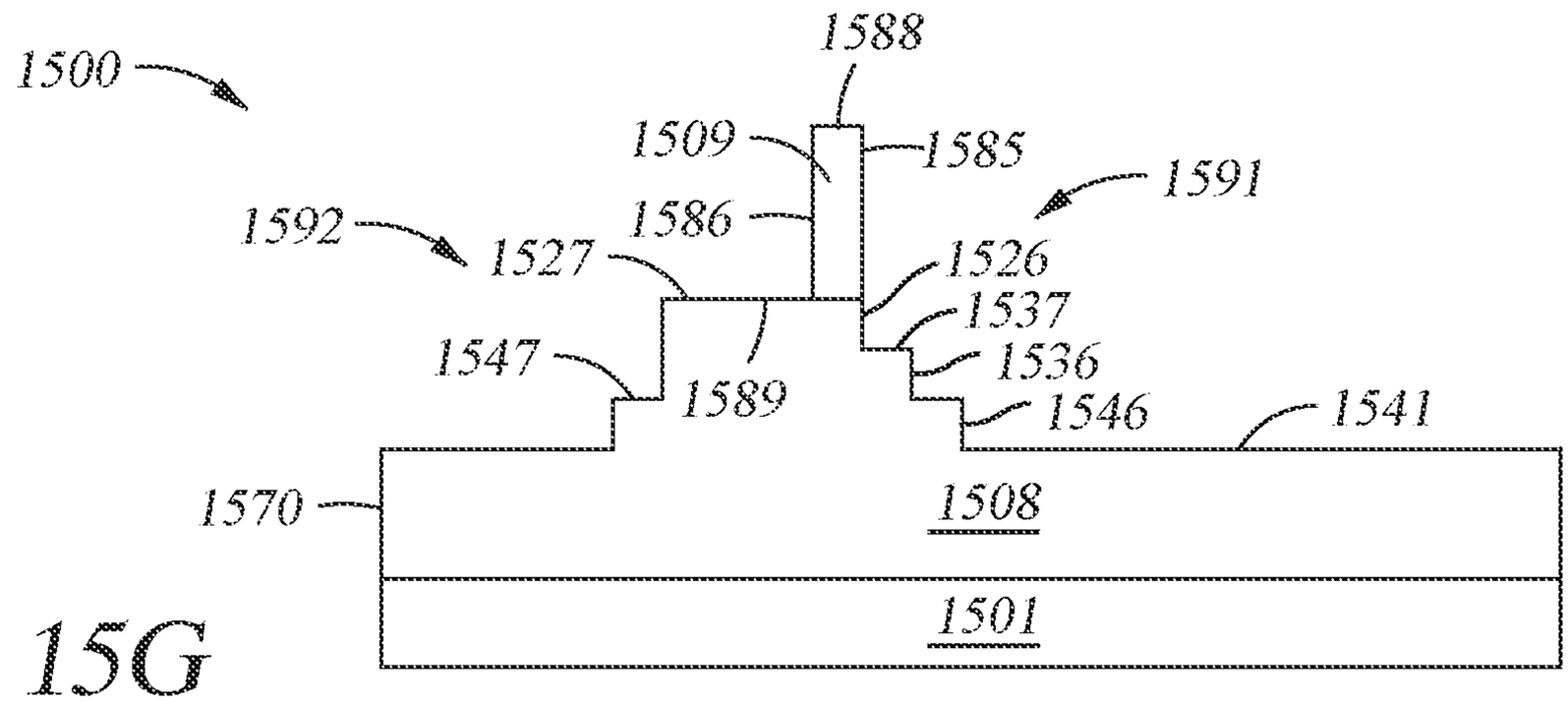

Fig. 15G

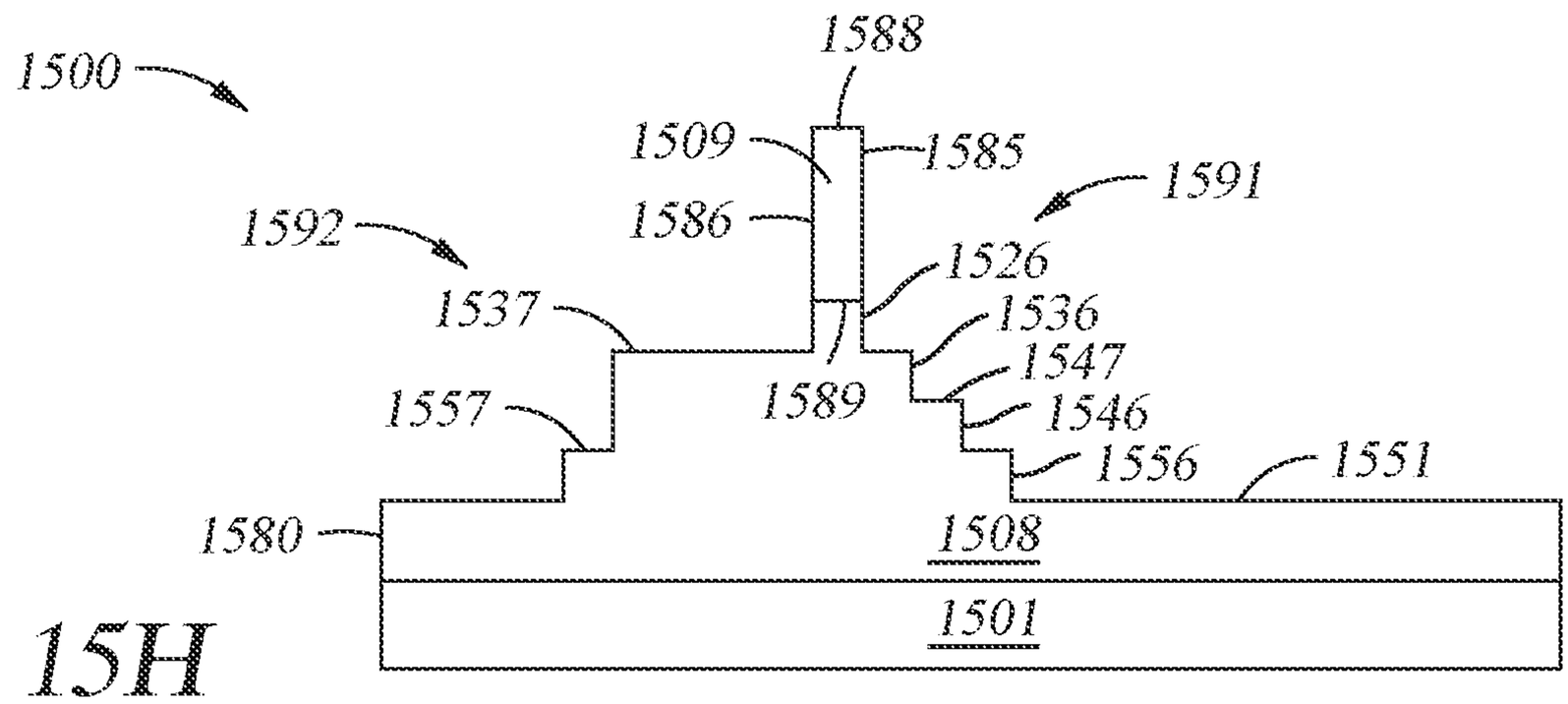

Fig. 15H

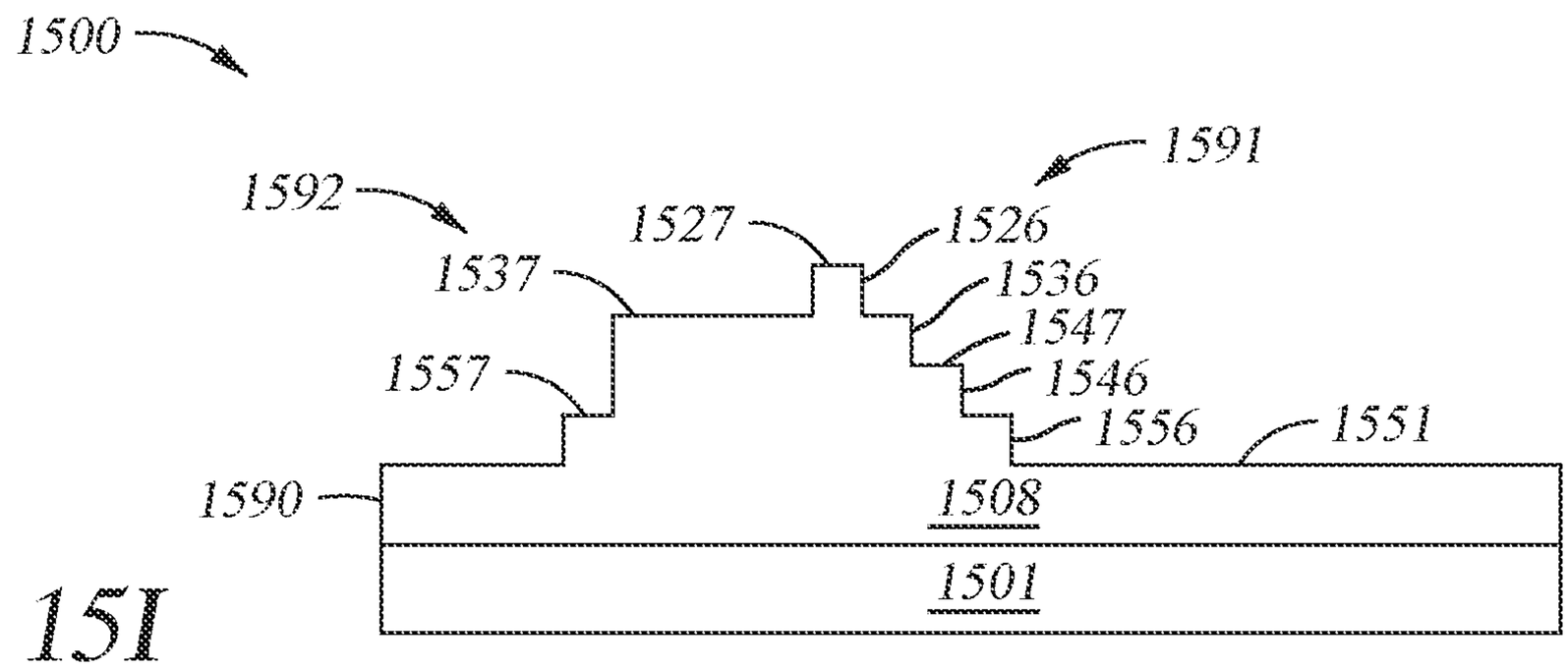

Fig. 15I

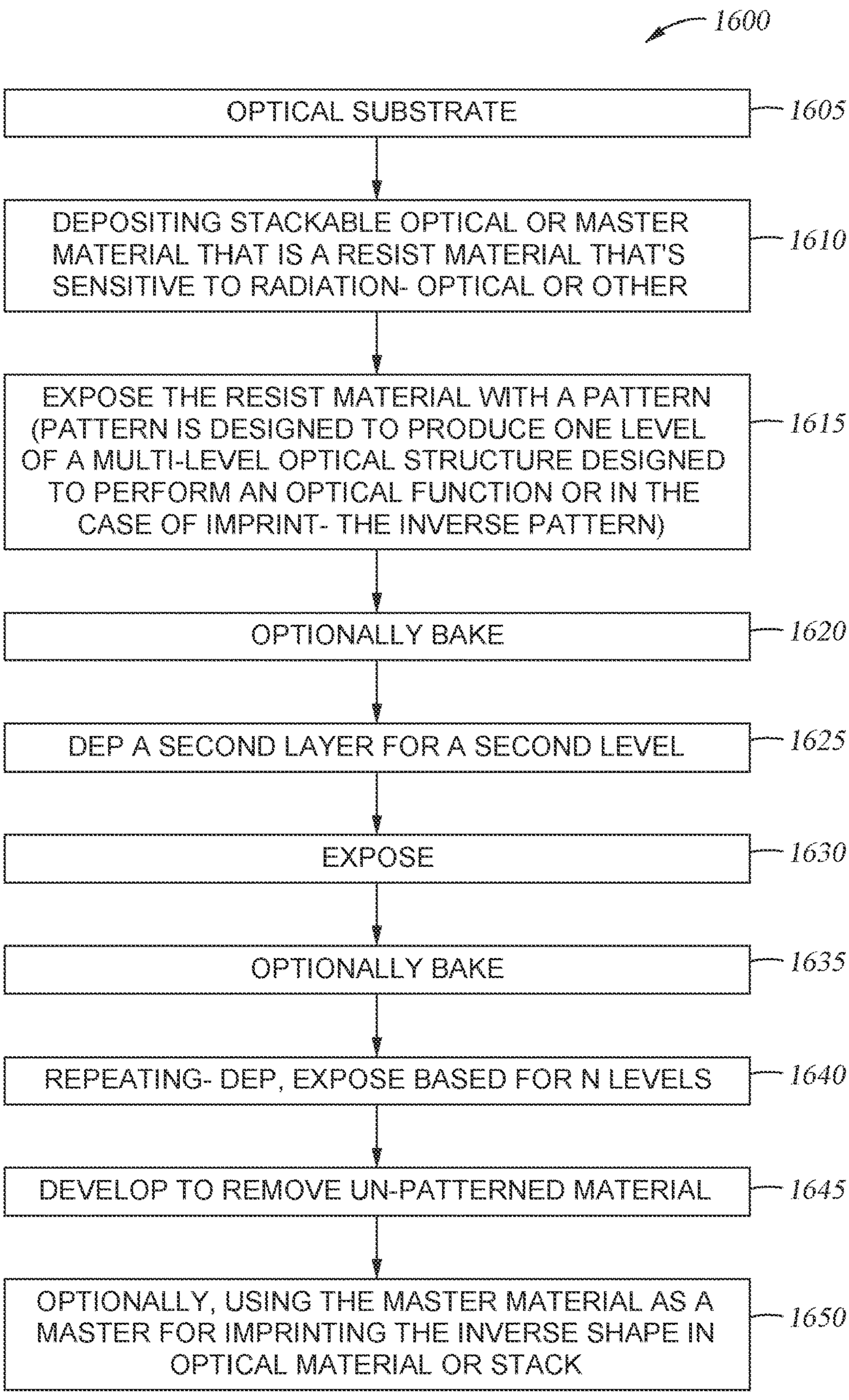
1600
OPTICAL SUBSTRATE
1605
DEPOSITING STACKABLE OPTICAL OR MASTER MATERIAL THAT IS A RESIST MATERIAL THAT'S SENSITIVE TO RADIATION- OPTICAL OR OTHER
1610
EXPOSE THE RESIST MATERIAL WITH A PATTERN (PATTERN IS DESIGNED TO PRODUCE ONE LEVEL OF A MULTI-LEVEL OPTICAL STRUCTURE DESIGNED TO PERFORM AN OPTICAL FUNCTION OR IN THE CASE OF IMPRINT- THE INVERSE PATTERN)
1615
OPTIONALLY BAKE
1620
DEP A SECOND LAYER FOR A SECOND LEVEL
1625
EXPOSE
1630
OPTIONALLY BAKE
1635
REPEATING- DEP, EXPOSE BASED FOR N LEVELS
1640
DEVELOP TO REMOVE UN-PATTERNED MATERIAL
1645
OPTIONALLY, USING THE MASTER MATERIAL AS A MASTER FOR IMPRINTING THE INVERSE SHAPE IN OPTICAL MATERIAL OR STACK
1650

Fig. 16

METHOD OF BUILDING A 3D FUNCTIONAL OPTICAL MATERIAL STACKING STRUCTURE

CROSS-REFERENCE TO RELATED APPLICATIONS

[0001] This application is a continuation application of is a continuation application U.S. patent application Ser. No. 17/456,507, filed on Nov. 24, 2021, which is a continuation of U.S. Pat. No. 11,187,836, issued on Nov. 30, 2021, which claims benefit of U.S. Provisional Application Ser. No. 62/639,475, filed Mar. 6, 2018, the contents of which are incorporated herein by reference in their entireties.

BACKGROUND OF THE DISCLOSURE

Field of the Invention

[0002] The embodiments herein generally relate to a process for forming 3D optical stackable structures.

Description of the Background Art

[0003] The 3D optical structures are used to produce complex optical devices. For example, the 3D optical structures may be used to generate 3D holograms with light. However, the quality of the 3D optics is highly dependent on increasing the density, and reducing the size of the 3D patterns on a stackable layer structure used for 3D optics. Creating a conventional 3D optical structure involves the formation of a 3-dimensional (3D) patternable and stackable layer structure with resist over a substrate. The substrate has a first layer of material deposited thereon and a resist is patterned for a first layer. The structure is then filled with a metal prior to planarizing with a chemical mechanical polisher. These operations are repeated over and over again for each layer to produce a plurality of different vertical heights in the structure. However, the current structures still yield structures of greater than a micron scale which results in a resolution that is undesirable for some 3D optical applications such as holograms.

[0004] While the problems and benefits of multiple patterning in terms of resolution, depth of focus and lithographic defect sensitivity are understood, there is additional desire to control the process budget and increase and maintain yield. Additionally, it is not easy to create this kind of structure since the application of subsequent material level (s) can dissolve or destroy the previously patterned material.

[0005] Therefore, there is a need for an improved method for creating a high density 3D multi-patterned structure on a substrate.

SUMMARY OF THE INVENTION

[0006] Embodiments herein describe a sub-micron 3D optical material structure and a method for forming the sub-micron 3D optical material structure. In a first embodiment, a method is provided for forming a sub-micron 3D optical material structure on a substrate without planarization, the method begins by depositing a material stack to be patterned on a substrate; depositing and patterning a thick mask material on a portion of the material stack, etching the material stack down one level; trimming a side portion of the thick mask material; etching the material stack down one more level, repeating trim and etch operations above 'n' times, and stripping the thick mask material from the material stack.

[0007] In a second embodiment, a method is provided for forming a sub-micron 3D optical material structure on a substrate without planarization, the method begins by coating a substrate with a first layer of a material, exposing the specified material with a lithography method to produce a first pattern, curing the exposed specified material if needed, coating the substrate with a second layer of the material, exposing the specified material with a lithography method to produce a second pattern, curing the exposed specified material if needed, repeating the operations for coating, exposing and curing above 'n' times for n layers of the material having n patterns exposed therein, and developing the exposed and cured regions of n patterns on n layers simultaneously.

[0008] In a third embodiment, a sub-micron asymmetrical 3D optical material structure is provided. The asymmetrical 3D optical material structure has a substrate having a top surface, a first functional material level formed on the top surface of the substrate. The first function material level further has a plurality of first unit pieces of material, each first unit piece of material having a height, a width and a length, all of which are less than about a micron. The asymmetrical 3D optical material structure further has a second functional material level formed on the first top surface of the first functional material level. The second function material level further has a plurality of second unit pieces of material, wherein each second unit piece of material is disposed on one of the first unit pieces and each second unit piece of material having a height, a width and a length, substantially similar to that of the first unit piece of material. The asymmetrical 3D optical material structure further has a third functional material level formed on the second top surface of the second functional material level, wherein the third function material level further has a plurality of third unit piece of material, wherein each third unit piece of material is disposed on one of the second unit piece of material and each third unit piece of material having a third height, a third width and a length, substantially similar to that of the second unit piece of material.

[0009] In a fourth embodiment, a sub-micron symmetrical 3D optical material structure is provided. The sub-micron symmetrical 3D optical material structure has a substrate having a top surface, a film stack disposed on the top surface of the substrate having an upper surface, a first functional material level formed on the upper surface of the film stack having a first width and a first upper surface, a second functional material level formed on the first upper surface of the first functional material level having a second width, and a third functional material level formed on the second upper surface of the second functional material level having a third width wherein the first width is greater than the second width which is greater than the third width and the first width, second width and third width form a profile symmetric about a center of the 3D optical material structure.

[0010] In a fifth embodiment, a method is provided for fabricating a sub-micron 3D diffractive optics element. The method begins by depositing an optical material stack to be patterned into a diffractive optics element on a substrate. The method then deposits and patterns a mask material on a portion of the material stack. The method continues by etching the material stack down one level. The method then

directionally etch one or more side portions of the mask material laterally by a desired distance and etches vertically the material stack down vertically a 2nd level. The method finishes by stripping the mask material.

BRIEF DESCRIPTION OF THE DRAWINGS

[0011] So that the manner in which the above recited features of the embodiments herein are attained and can be understood in detail, a more particular description of the invention, briefly summarized above, may be had by reference to the embodiments thereof which are illustrated in the appended drawings.

[0012] FIG. **1** illustrates a group of semiconductor processing equipment suitable for building a 3D functional optical material stacking structure on a substrate.

[0013] FIGS. **2**A through **2**F illustrate a first method for building 3D functional optical material level structure on a substrate using a surface treatment technique.

[0014] FIGS. **3**A through **3**F illustrate a second method for building 3D functional optical material level structure on a substrate using a material impregnation technique.

[0015] FIGS. **4**A through **4**C illustrate a third method for building 3D functional optical material level structure on a substrate using a technique of alternating pairs of materials.

[0016] FIGS. **5**A through **5**C illustrate a fourth method for building 3D functional optical material level structure on a substrate using a sol-gel technique.

[0017] FIG. **6** shows a fifth method for forming a sub-micron 3D optical material structure on a substrate without planarization.

[0018] FIGS. **7**A through **7**J illustrate the fifth method of FIG. **6** for building 3D functional optical material level structure on a substrate using repetitive coating and exposure technique.

[0019] FIGS. **8**A through **8**E provides an illustration for the construction for the 3D functional optical material level structure on a substrate.

[0020] FIG. **9** shows a method for forming a sub-micron 3D optical material structure on a substrate without planarization.

[0021] FIGS. **10**A through **10**G illustrates the method of FIG. **9** for making symmetric 3D optical structure.

[0022] FIGS. **11**A through **11**E illustrate a method for making a one or more sided stepped 3D optical structure.

[0023] FIGS. **12**A through **12**C provides an illustration of a symmetrical 3D optical structure formed in the method of FIGS. **10**A through **10**G.

[0024] FIGS. **13**A through **13**C provides an illustration of a 3D optical structure having one or more stepped sides formed in the method of FIGS. **11**A through **11**E.

[0025] FIG. **14** illustrates another embodiment for the 3D optical material level structure formed on a diffractive optics element formed using the repetitive coating and exposure technique, the 3D optical material level structure having a gap therein.

[0026] FIG. **15**A through **15**I illustrates a method for building fully customizable 3D functional optical material level structure on a substrate using trim etch technique.

[0027] FIG. **16** shows a method for forming a sub-micron 3D optical material structure on a substrate using repetitive coating and exposure technique as shown in FIGS. **7**A through **7**J.

[0028] To facilitate understanding of the embodiments, identical reference numerals have been used, where possible, to designate identical elements that are common to the figures. It is contemplated that elements and features of one embodiment may be beneficially incorporated in other embodiments without further recitation.

[0029] It is to be noted, however, that the appended drawings illustrate only exemplary embodiments and are therefore not to be considered limiting of its scope, for the invention may admit to other equally effective embodiments.

DETAILED DESCRIPTION

[0030] Diffractive optical elements have been in use since the 19th century. In recent years, advancement in optics research enabled light manipulation using sub-wavelength and sub-micron diffractive optics, in both simulation and low volume fabrication. These nano-antennae can change the phase, amplitude, and polarization of light. Meta-surfaces based on Pancharatnam-Berry effect or other posts are one embodiment, made of high-aspect-ratio dielectric pillars. Mie or Huygens resonators, made with nano-discs are another embodiment and plasmonics resonance might be another. However, the feature dimensions required by resonators are challenging to achieve at scale, whether through stringent deposition, patterning, etching or other semiconductor-based methods. Moreover, the efficiency of plasmonics optical elements is limited, so it could only cater to some applications.

[0031] Multi-level diffractive optics elements benefit from manipulating the scalar properties of light through features that could be larger than the wavelength. If the features involve dimensions that are over 1 um, they can be fabricated using greyscale lithography, either with direct or indirect writing tools. Yet, greyscale lithography is limited in its resolution and shrinking the x, y and z features could enable higher field-of-view, larger numerical aperture and others.

[0032] One approach to fabrication of sub-micron multi-level diffractive optics is taking the multiple patterning, in which every layer is separately deposited, patterned and etched. Another approach takes a metal damascene route for multiple level fabrications. This approach of multiple patterning demonstrates both benefits and challenges in terms of resolution, depth of focus and lithographic defect sensitivity. It is also additional beneficial to control the process budget and increase and maintain yield. This work describes a method for creating a high-density, sub-micron multi-level patterned structure on a substrate.

[0033] Functional layer(s) modification makes the previous layer(s) more robust to withstand subsequent layer processing which enables 3D layer stacking optical structures. Embodiments here aim to reduce the material processing interaction when processing multiple patterned layers to form 3D patterned optical structures for engineered optics application. Embodiments are illustrated below to show the fabrication techniques for the 3D layer stacking optical structures. In one embodiment, one or more radiation curable functional leave-on material levels form the 3D patterned structure. In another embodiment, one or more radiation curable functional organic polymer, inorganic, or organic/inorganic hybrid material level form 3D patterned structures. In yet another embodiment, radiation hardening is provided for a previous material level (additional polymer cross linking) to improve the robustness of the previous material and to provide "skin" protection against subsequent

material level processing and patterning. In yet another embodiment, a surface treatment process, such as atomic layer deposition (ALD), is used between patterned layers to provide a barrier layer to minimize interaction of subsequent layers with previous layer(s). In yet another embodiment, an impregnation technique (can be dry, wet or vapor treatment) is used to improve the robustness of the previous material level(s). In yet another embodiment, a doping technique, or ion implantation technique, is used to improve the robustness of the previous material level(s). In yet another embodiment, alternating material level pairs (layer of material A and layer of material B) are used to reduce material interaction during processing. For example, material A may be a sol-gel base material and material B can be a polymer based material. In yet another embodiment, sol-gel material levels are used to build up 3D structures such that cured sol-gel layers forming SiO_x are robust enough to withstand material interaction with subsequent sol-gel layer processing. Advantageously, previous patterned layers are protected and are able to endure subsequent layer processing and patterning.

[0034] Additional embodiments are directed to the formation of symmetrical 3D optical stacking structures. The symmetrical 3D optical stacking structures utilize a resist trim process to generate sub-micron scale features. Further embodiments take the symmetrical approach and add a hardmask to make the symmetrical feature one sided, such as a Fresnel lens. In yet further embodiments, directional etch is utilized to form completely customizable and/or asymmetrical sub-micron 3D optical structures.

[0035] The embodiments briefly discussed above advantageously provide reduced operations for generating the structures while enabling the construction of sub-micron scale 3D optical structures. The methods disclosed below enable highly sophisticated customizable 3D optical structures to be quickly formed in a cost effective manner on a sub-micron scale. For example, the 3D features may be formed at a scale with a height such as between about 20 nm to about 1 micron, such as about 500 nm or 200 nm. The 3D optical structures may be formed on a diffractive optics element structure, i.e., a sheet of material with sub-wavelength thickness with subwavelength-scaled patterns in the horizontal dimensions. The diffractive optics element structure may have gratings and other single level structures, symmetrically stepped structures and stepped structures with one or more sides with no steps.

[0036] The structures disclosed herein are completely customizable for forming features which may appear at the Nano scale to display symmetry or asymmetry about a central axis, a step structure, or a portion thereof any possibly 3D feature. It should be appreciated that the scale of said features, although 3D at the Nano scale, may be used to form a flat lens at a scale visible to an unaided human eye. Furthermore, although the figures for the discussion below all illustrate square structures, it should be appreciated that the methods disclosed herein could be used to make elliptical cross-section pillars having different major and minor axis, a circular pillar or any other polygon shape for forming pillars of differing heights in the 3D optical stacking structures.

[0037] FIG. **1** illustrates a group of semiconductor processing equipment **100** suitable for building 3D optical material stacking structure on a substrate. The group of semiconductor processing equipment **100** has one of more of a coating tool **110** or spin coating, a photo exposure tool **120**, a baking/curing tool **130** and a development tool **140**.

[0038] The coating tool **110** is configured to apply a layer of material onto a substrate. The coating tool **110** may use a spray coating technique for applying a substantially even layer of material. Alternately, the coating tool **110** may use a spin coating technique for applying a substantially even layer of material. In yet other alternatives, the coating tool **110** may be a chemical vapor deposition chamber or a plasma vapor deposition chamber, an atomic layer deposition chamber, or other suitable device suitable to apply a thin film, such as few micro meters or nanometers, of material to the substrate.

[0039] The photo exposure tool **120** may be a lithography tool which provides light energy to alter the resist to form a pattern therein. The photo exposure tool **120** may use a digital mask to form the patterns on the resist for forming features thereon.

[0040] The baking/curing tool **130** may use temperature or other energy to change the material composition of an outer surface or entire layer of the material deposited on the substrate. The baking/curing tool **130** may remove moisture, or volatiles, i.e., solvents, or catalyzes a reaction to alter the material for suitability or compatibility of subsequently materials subsequently applied on to the baked, i.e., cured, layer of material.

[0041] The development tool **140** dissolves the layers of resist on the substrate to reveal the structure of the pattern created thereon. After development, the substrate contains the 3D optical material stacking structures for creating devices thereon the substrate. The 3D optical material stacking structure may be formed by using one of the several methods discussed below.

[0042] FIGS. **2**A through **2**F illustrate a first method **200** for building 3D functional optical material level structure on a substrate using a surface treatment technique. The embodiment depicts the 3D stacking of optical material levels resulting in pillars of various heights on a substrate **201**. The first method **200** provides a reduced number of operations over conventional operations and additionally eliminates repetitive planarizing steps.

[0043] At block **210** shown in FIG. **2**A, one or more first functional material levels (FML) **211** are formed on a top surface **202** of the substrate **201**. The first FML **211**, and each FML further described here, has a thickness, or height, of between about 20 nm to about 1 micron, such as about 200 nm. The first FML **211** has a first outer surface **213**, a first top surface **212** and a first bottom surface **215**. The first top surface **212** of the first FML **211** is provided opposite the first bottom surface **215**. The first bottom surface **215** being disposed on the top surface **202** of the substrate **201**.

[0044] At block **220** shown in FIG. **2**B, a first surface treatment (ST) **221** is performed on the first outer surface **213** of the first FML **211**. The first ST **221** extends over the first top surface **212** but not the first bottom surface **215**. The first ST **221** may be an atomic deposition layer, doped or ion implantation, radiation hardening, radiation curable (such as baking or ultra violet (UV) cured) or other treatment which changes the composition of the first outer surface **213** of the first FML **211**.

[0045] At block **230** shown in FIG. **2**C, one or more second functional material levels (FML) **231** are formed on one or more of the first top surface **212** of the first FML **211**, wherein the first top surface **212** has the first ST **221**. The

second FML **231** is compatible with the first ST **221** such that a solvent or other chemical will not attack the underlying previous layer, i.e., the first FML **211**. Each second FML **231** is deposited on one, but not necessarily all, of the first FML **211**. For example, the second FML **231** would not be formed on the substrate **201**. However, it should be appreciated that each first FML **211** may not necessarily have one of the second FML **231** formed thereon, such as the first FML **211** provided with item number **239**. The second FML **231** has a second outer surface **233**, a second top surface **232** and a second bottom surface **235**. The second bottom surface **235** is disposed on the first top surface **212** of the first ST **221**.

[0046] At block **240** shown in FIG. **2**D, a second surface treatment (ST) **241** is performed on the second outer surface **233** of the second FML **231**. The second ST **241** extends over the second top surface **232** but not the second bottom surface **235**. The second ST **241** is substantially similar to first ST **221**. Alternately, the first ST **221** and second ST **241** may utilize different techniques to change the composition of the first outer surface **213** and the second outer surface **223**.

[0047] At block **250** shown in FIG. **2**E, one or more third functional material levels (FML) **251** are formed on one or more of the second top surface **232** of the second FML **231** wherein the second top surface **232** has the second ST **241**. Each third FML **251** is always disposed on one, but not necessarily all, of the second FML **231**. For example, the third FML **251** would not be directly formed on either the substrate **201** or the first FML **211**. Again, it should be appreciated that each second FML **231** may not necessarily have one of the third FML **251** formed thereon. The third FML **251** has a third outer surface **253**, a third top surface **252** and a third bottom surface **255**. The third bottom surface **255** is disposed on the second top surface **232** of the second ST **241**.

[0048] At block **260** shown in FIG. **2**F, a third surface treatment (ST) **261** is performed on the third outer surface **253** of the third FML **251**. The third ST **261** extends over the third top surface **252** but not the third bottom surface **255**. The third ST **261** is substantially similar to the first ST **221** and the second ST **241**. Alternately, the third ST **261** may utilize a technique different than either the first ST **221** or the second ST **241**.

[0049] It should be appreciated that the layers may continue to be stacked well beyond three layers. Each layer merely needs to be chemically compatible with the surface treatment provided at the lower layer. The operations outlines above may be repeated any number of times to produce a complex and highly sophisticated 3D optical structure as illustrated in FIGS. **8**A through **8**E which will be discussed further below. However, as will be disclosed with respect to the embodiment of a second method **300** disclosed in FIGS. **3**A through **3**F, the highly sophisticated 3D optical structures may be created by yet another technique.

[0050] FIGS. **3**A through **3**F illustrate the second method **300** for building a 3D functional optical material level structure on a substrate using a material impregnation technique. The embodiment depicts the 3D stacking of optical material levels resulting in pillars of various heights on a substrate **301**.

[0051] At block **310** shown in FIG. **3**A, one or more first functional material levels (FML) **311** are formed on a top surface **302** of the substrate **301**. The first FML **311**, and each FML further described with respect to FIGS. **3**A through **3**F, has a thickness, or height, of between about 20 nm to about 1 micron, such as about 200 nm. The first FML **311** has an outer surface **313**, a first top surface **312** and a first bottom surface **315**. The first top surface **312** of the first FML **311** is provided opposite the first bottom surface **315**. The first bottom surface **315** being disposed on the top surface **302** of the substrate **301**.

[0052] At block **320** shown in FIG. **3**B, a treatment is performed on the first FML **311** to form a first treated FML **321**. The first treated FML **321** is a changed composition for the material of the first FML **311**. For example, the treatment may be performed by baking or electron volt implantation to alter the structure of the first FML **311** to yield the first treated FML **321**, a more robust material suitable for stacking and substantially chemically inert to subsequent layers which may be disposed thereon.

[0053] At block **330** shown in FIG. **3**C, one or more second functional material levels (FML) **331** are formed on one or more of the first top surface **312** of the first treated FML **321**. The second FML **331** is compatible with the first treated FML **321** such that a solvent or other chemical will not attack the underlying layer, i.e., the first treated FML **321**. Each second FML **331** is disposed on one, but not necessarily all, of the first treated FML **321**. For example, the second FML **331** would not be formed on the substrate **301**. However, it should be appreciated that each first treated FML **321** may not necessarily have one of the second FML **331** formed thereon, such as the first treated FML **321** provided with item number **339**. The second FML **331** has a second outer surface **333**, a second top surface **332** and a second bottom surface **335**. The second bottom surface **335** being disposed on the first top surface **312** of the first treated FML **321**.

[0054] At block **340** shown in FIG. **3**D, a treatment is performed on the second FML **331** to form a second treated FML **341**. The second treated FML **341** is a changed composition for the material of the second FML **331**. For example, the treatment alters the structure of the second FML **331** to yield the second treated FML **341**, a more robust material suitable for stacking similar, though not necessarily the same, to the first treated FML **321**.

[0055] At block **350** shown in FIG. **3**E, one or more third functional material levels (FML) **351** are formed on one or more of the second top surface **332** of the second treated FML **341**. The third FML **351** is compatible with the second treated FML **341** such that a solvent or other chemical will not attack the previous layer, i.e., the second treated FML **341**. Each third FML **351** is disposed on one, but not necessarily all, of the second treated FML **341**. For example, the third FML **351** would not be formed on the substrate **301** or even the first treated FML **321**. However, it should be appreciated that each second treated FML **341** may not necessarily have one of the third FML **351** formed thereon.

[0056] At block **360** shown in FIG. **3**F, a treatment is performed on the third FML **351** to form a third treated FML **361**. The third treated FML **361** is a changed composition for the material of the third FML **351**. The treatment alters the structure of the third FML **351** to yield the third treated FML **361**, a more robust material suitable for stacking and substantially chemically inert to subsequent layers which may be disposed thereon. The third treated FML **361** is substantially similar to the first treated FML **321** and the second treated **341**. Alternately, the third treated FML **361** may

utilize a different treatment technique than either the first treated FML **321** or the second treated FML **341**.

[0057] It should be appreciated that the layers may continue to be stacked well beyond three layers. Each layer merely needs to be chemically compatible with an adjacent layer with the treatment changing the material composition to facilitate the compatibility. The operations outlined above may be repeated any number of times to produce a complex and highly sophisticated 3D optical structure as illustrated in FIGS. **8**A through **8**E. However, as will be disclosed with respect to the embodiment of a third method **400** disclosed in FIGS. **4**A through **4**C, the highly sophisticated 3D optical structures may be created by yet another technique.

[0058] FIGS. **4**A through **4**C illustrate the third method **400** for building 3D functional optical material level structures on a substrate using a technique of alternating pairs of materials. For example, a first level may be formed from a material A and a second level may be formed from a material B, where material A after formation is compatible with material B as it is formed thereon. For example, material A may be a sol-gel base material and material B can be a polymer based material. As such, a solvent of material B would not dissolve or interact negatively with material A. Each 3D functional optical material level structure further described here in FIGS. **4**A through **4**C, has a thickness, or height, of between about 20 nm to about 1 micron, such as about 200 nm.

[0059] At block **410** shown in FIG. **4**A, one or more first functional material levels (FML) **411** are formed on a top surface **402** of the substrate **401**. The first FML **411** has an outer surface **413**, a first top surface **412** and a first bottom surface **415**. The first top surface **412** of the first FML **411** is provided opposite the first bottom surface **415**. The first bottom surface **415** being disposed on the top surface **402** of the substrate **401**. The first FML **411** being formed from a first material A.

[0060] At block **420** shown in FIG. **4**B, one or more second functional material levels (FML) **421** are formed on one or more of the first top surface **412** of the first FML **411**. Each second FML **421** is disposed on one, but not necessarily all, of the first FML **411**. The second FML **421** has an outer surface **423**, a second top surface **422** and a second bottom surface **425**. The second FML **421** is formed from a second material B. The material B of the second FML **421** is compatible with the material A of the first FML **411** such that the second FML **421** does not chemically or otherwise attack the first FML **411**.

[0061] At block **430** shown in FIG. **4**C, one or more third functional material levels (FML) **431** are formed on top of the one or more of the second top surface **422** of the second FML **421**. Each third FML **431** is disposed on one, but not necessarily all, of the second FML **421**. The third FML **431** is formed from material A. The third FML **431** is of the same material A as that of the first FML **411**. The material A of the third FML **431** is compatible with the material B of the second FML **421** such that the third FML **431** does not chemically or otherwise attack the second FML **421**.

[0062] It should be appreciated that by alternating material A and material B, the number of levels may continue to be stacked well beyond three levels. Each level chemically compatible with an adjacent layer to facilitate rapid building of the 3D structure with a minimum number of operations. For example, repeated cycles of deposit, etch, and planarization at each level is unnecessary. The operations outlined above may be repeated any number of times to produce a complex and highly sophisticated 3D optical structure as illustrated in FIGS. **8**A through **8**E. However, as will be disclosed with respect to the embodiment of a fourth method **500** disclosed in FIGS. **5**A through **5**C, the highly sophisticated 3D optical structures may be created by yet another technique.

[0063] FIGS. **5**A through **5**C illustrate the fourth method **500** for building 3D functional optical material level structure on a substrate using a sol-gel technique. The sol-gel technique may be used for fabricating metal oxides, especially the oxides of silicon and titanium. The process involves conversion of monomers into a colloidal solution (sol) that acts as the precursor for an integrated network (or gel) of either discrete particles or network polymers. The solution (sol) gradually evolves towards the formation of a gel-like diphasic system containing both a liquid phase and solid phase whose morphologies range from discrete particles to continuous polymer networks. An underlying level is thus cured to form a compatible polymer that is robust enough to allow the colloidal solution of a subsequent level to be placed thereon. Each level further described here, has a finished thickness, or height, of between about 20 nm to about 1 micron, such as about 200 nm.

[0064] At block **510** as shown in FIG. **5**A, one or more first functional material levels (FML) **511** are formed on a top surface **502** of a substrate **501**. Each first FML **511** has an outer surface **513**, a first top surface **512** and a first bottom surface **515**. The first top surface **512** of the first FML **511** is provided opposite the first bottom surface **515**. The first bottom surface **515** being disposed on the top surface **502** of the substrate **501**. The first FML **511** is a sol-gel material which is deposited by spin coating or other suitable techniques on the substrate **501** as a solution and is densified to form a polymer network of material into a SiO_x. The first FML **511** is cured in preparation of stacking of additional levels.

[0065] At block **520** as shown in FIG. **5**B, one or more second functional material levels (FML) **521** are formed on one or more of the first top surface **512** of the first FML **511**. Each second FML **521** is disposed on one, but not necessarily all, of the first FML **511**. Each second FML **521** has an outer surface **523**, a second top surface **522** and a second bottom surface **525**. The second FML **521** is formed from a sol-gel material similar to the solution used in the formation of the first FML **511**. The solution of the second FML **521** is compatible with the polymer material of the first FML **511** such that the second FML **521** does not chemically or otherwise attack the first FML **511** and the second FML **521** can be stacked thereon. The second FML **521** is then cured in preparation of stacking of additional levels.

[0066] At block **530** as shown in FIG. **5**C, one or more third functional material levels (FML) **531** are formed on top of the one or more of the second top surface **522** of the second FML **521**. Each third FML **531** is disposed on one, but not necessarily on each, of the second FML **521**. The third FML **531** is formed from a sol-gel material similar to the solution used in the formation of the first FML **511** and the second FML **521**. The solution of the third FML **531** is compatible with the polymer material the second FML **521** such that the third FML **531** does not chemically or otherwise attack the second FML **521** and the third FML **531** can be stacked thereon. The third FML **531** is then cured in preparation of stacking of additional levels.

[0067] It should be appreciated that additional sol-gel levels of silicon oxide material may continue to be stacked well beyond the three levels discussed above. The sol-gel material levels are used to build up 3D structures such that cured sol-gel levels (forming SiO_x) are robust enough to withstand material interaction with subsequent sol-gel levels. Each level is chemically compatible with an underlying level to facilitate rapid building of the levels for the 3D structure with a minimum number of operations. The operations outlined above may be repeated any number of times to produce a complex and highly sophisticated 3D optical structure as illustrated in FIGS. **8**A through **8**E. However, as will be disclosed with respect to the embodiment of a fifth method **600** disclosed in FIG. **6** and shown in FIGS. **7**A through **7**J, the highly sophisticated 3D optical structures may be created by yet another technique.

[0068] FIG. **6** and FIGS. **7**A through **7**J will now be discussed together. FIG. **6** shows a fifth method **600** for forming a sub-micron 3D optical material structure on a substrate without planarization. FIGS. **7**A through **7**J may be used to illustrate the fifth method **600** of FIG. **6** for building 3D functional optical material level structure on a substrate using repetitive coating and exposure technique.

[0069] The fifth method **600** begins at block **610** by coating a substrate **701** with a first resist layer **711** of a material. The material may be a resist layer. The substrate **701** is acquired and a SiO_2 layer is grown thereon in preparation of the first layer of material in step **705** shown in FIG. **7**A. The SiO_2 may be formed by thermal oxide growth. The technique forces an oxidizing agent to diffuse into the substrate at high temperatures and react with it. The SiO_2 layer is grown to about 100 nm.

[0070] The first layer of material, the first resist layer **711**, is applied to the substrate **701** at block **710** in FIG. **7**B. The first resist layer **711** may be deposited, spin coated or placed thereon the substrate **701** by any suitable technique. In one embodiment, the first resist layer **711** is spin coated onto the substrate **701**. The first resist layer **711**, and each resist layer described below with respect to FIGS. **7**A through **7**J, has a thickness, or height, of between about 20 nm to about 1 micron, such as about 200 nm.

[0071] At block **620**, the first resist layer **711** is exposed with a lithography method to produce a first pattern. At block **630**, the exposed the first resist layer **711** may be cured if needed. Block **715** shown in FIG. **7**C, illustratively shows the first resist layer **711** exposed through a mask forming the first pattern and the first layer being baked, i.e., cured. The exposure and baking process **719** results in the first resist layer **711** forming a plurality of first cured material level **716** in the locations which were exposed through the mask and then baked. The exposure and baking process **719** may be a blanket electromagnetic radiation exposure operation. The mask may be a fine metal mask, digital mask (maskless) or other technique for forming an image on the first resist layer **711** by projecting energy therethrough. It should be appreciated that the arrows representing the exposure and baking process **719** only act on the first cured material level **716** through the mask and not the un-exposed the first resist layer **711**.

[0072] At block **640**, the substrate is coating with a second resist layer **721** of the material. The second resist layer **721** is shown at block **720** in FIG. **7**D formed on to the first layer containing the first resist layer **711** and the first cured material level **716**. The second resist layer **721** may utilize a spin coating technique for applying the second resist layer **721** to the underlying layers, i.e., the first cured material level **716** and the first resist layer **711**. The second resist layer **721** may be applied to the underlying layers without planarization of the underlying layers. The material of the second resist layer **721** is substantially the same as the material of the first resist layer **711**.

[0073] At block **650**, the second resist layer **721** is exposed with a lithography method to produce a second pattern. At block **660**, the exposed the second resist layer **721** may be cured if needed. An exposure and baking process **729** is shown block **725** shown in FIG. **7**E. The exposure and baking process **729** results in the second resist layer **721** forming a plurality of second cured materials level **726** in the locations which were exposed through the mask. The second cured materials level **726** is formed on the first cured material level **716**. However, not all of the first cured material level **716** has the second cured materials level **726** formed thereon. The material of the second cured materials level **726** may be substantially similar to that of the first cured material level **716**.

[0074] At block **670**, the blocks **640** through blocks **660** may be repeated 'n' times for n layers of the resist material having n patterns exposed therein. N is an integer corresponding to the number of levels for the sub-micron 3D optical structure. For example, the sub-micron 3D optical structure may have N equal to 4, 8, 16, 32 layers/levels, or maybe more.

[0075] In one purely illustrative example, N may be equal to 4 corresponding to 4 layers of resist. This is shown at block **730**, FIG. **7**F, wherein a third resist layer **731** is formed on to the second layer having the second resist layer **721** and the second cured materials level **726**. The third resist layer **731** may utilize a spin coating technique for applying the third resist layer **731** to the underlying layers, i.e., the second cured materials level **726** and the second resist layer **721**. The third resist layer **731** may be applied to the underlying layers without planarization of the underlying layers. The material of the third resist layer **731** is substantially the same as the material of the first resist layer **711** and the second resist layer **721**.

[0076] At block **735** shown in FIG. **7**G, the third resist layer **731** is expose and bake through a mask. An exposure and baking process **739** results in the third resist layer **731** forming a plurality of third cured materials **736** in the locations which were exposed through the mask. The third cured materials **736** may be substantially similar to the first cured material level **716** and the second cured materials level **726**. However, it should be appreciated the third cured materials **736** is formed only on the second cured materials level **726** yet not all the second cured materials level **726** have the third cured materials **736** formed thereon. For example, the mask may pattern the third resist layer **731** such that one of the second cured materials level **726** may have the third resist layer **731** thereon after the exposure and baking process.

[0077] At block **740** shown in FIG. **7**H, a fourth resist layer **741** is formed on to the third layer having the third resist layer **731** and the third cured materials **736**. The fourth resist layer **741** may utilize a spin coating technique for applying the fourth resist layer **741** to the underlying layers, i.e., the third cured materials **736** and the third resist layer **731**. The fourth resist layer **741** may be applied to the underlying layers without planarization of the underlying

layers. The material of the fourth resist layer **741** is substantially the same as the material of the first resist layer **711**, the second resist layer **721** and the third resist layer **731**.

[0078] At block **745** shown in FIG. **7**I, the fourth resist layer **741** is expose and bake through a mask. An exposure and baking process **749** results in the fourth resist layer **741** forming a plurality of fourth cured materials **746** in the locations which were exposed through the mask. The fourth cured materials **746** may be substantially similar to the first cured material level **716**, the second cured materials level **726**, and the third cured materials **736**. However, it should be appreciated the fourth cured materials **746** is formed only on the third cured materials **736** yet not all the third cured materials **736** have the fourth cured materials **746** formed thereon. Alternately, the intermediate steps may forgo curing and have just one final curing step prior to development.

[0079] It should be appreciated that the aforementioned steps of spin coating a resist and exposing the resist through a mask and backing to form the cured materials can be repeated to form multiple layers and complex 3D structures.

[0080] At block **680**, the exposed and cured regions of the n patterns on n layers are simultaneously developed. Block **750** shown in FIG. **7**J, illustrates the developed 3D structure. The fourth resist layer **741**, the third resist layer **731**, the second resist layer **721** and the first resist layer **711** are all removed by the development process leaving a void **751**, or no material, where once the resist material previously occupied. The effect is only the 3D structure formed from the fourth cured materials **746**, the third cured materials **736**, the second cured materials level **726** and the first cured material level **716** are left behind on the substrate **701**.

[0081] The conventional approach for building 3D functional optical material structure on a substrate may involve a multitude of operations which may include operations for SiO_2 thermal oxide growth, Cu physical vapor deposition (PVD) deposition, Cu electrochemical plating (ECP), and lithography. Each layer repeatedly performing the steps for Cu ECP, Chemical Mechanical polishing (CMP), stop on resist and lithography prior to removing the resist. The fifth method **600** can build the same 3D functional optical material level structure in as little as ten process steps. Therefore, the fifth method **600**, illustrated above, provides savings of time and resources for building a 3D pattern suitable for generating the 3D functional optical structure resulting in significant savings in time, material and factory resources.

[0082] FIGS. **8**A through **8**E provides an illustration for the construction for a 3D functional optical material level structure (3D structure) **800** on a substrate **801**. The 3D structure **800** may be asymmetrical or symmetrical. A grid is provided having a Y-axis **891** with units of a 'levels' and an X-axis **892** with units of 'unit piece'. The units along the Y-axis have a thickness, or height, of between about 20 nm to about 1 micron, such as about 200 nm. Additionally, the units along the X-axis have a width, or length, of between about 20 nm to about 1 micron, such as about 200 nm. The preceding methods discussed above in FIGS. **2**A through **7**J enable the fabrication of the 3D structure at sub-micron scales. Although the 3D structure **800** is shown built level by level, this is done for clarity and it should be appreciated that the voids and cavities therein may be formed after all the levels for the 3D structure **800** are in place. For example, the final step of developing may remove all the material (resist) in certain areas down to the first level while leaving material in other locations for building the 3D structure **800**. Or alternately, the processes for building the levels of the 3D structure **800** may be additive and the voids and cavities therein are formed when each level of construction for the 3D structure **800** as the material is put in place.

[0083] At block **810** shown in FIG. **8**A, a first layer **811** of a material **808** is provided on the substrate **801**. The first layer **811** may be formed from a plurality of unit pieces, such as unit piece **893**. The unit piece **893** may have a length, height and width of each between about 20 nm to about 1 micron, such as about 200 nm. The material **808** of the unit pieces **893** may be formed from a material compatible with the methodology utilized from above. For example, with respect to method **600**, the unit pieces **893** are formed from a resist material. The first layer **811** has a plurality of vias or voids **802** therein, i.e., absent the unit pieces **893**, and may form a layer in a complicated and customized 3D structure.

[0084] At block **820** shown in FIG. **8**B, a second layer **821** of material **828** is provided on top of the material **808** of the first layer **811**. The material **828** is available only on the top of the material **808** of the first layer **811** and not provided in the voids **802**. Additionally, one or more new voids **822** are formed in the second layer **821**.

[0085] At block **830** shown in FIG. **8**C, a third layer **831** of material **838** is provided on top of the material **828** of the second layer **821**. The material **838** is available only on the top of the material **828** of the second layer **821** and not provided in the voids **802**, or the material **808** of the first layer **811**. Additionally, one or more new voids **832** are formed in the third layer **831**.

[0086] At block **840** shown in FIG. **8**D, a fourth layer **841** of material **848** is provided on top of the material **838** of the third layer **831**. The material **838** is available only on the top of the material **838** of the third layer **831** as similarly discussed above. Additionally, one or more new voids **842** are formed in the fourth layer **841**.

[0087] As shown above, a multitude of layers may be stacked to form 3D structure **800** having four (4), eight (8), sixteen (16), thirty two (32) or more layers of material. Each layer having structures at a sub-micron scale. At step **850** as shown in FIG. **8**E, a seventh layer **871** of material is provided on the substrate **801** to form the 3D structure **800**. 3D structure **800** may be formed with unit pieces **893** at a scale of between about 20 nm to about 1 micron, such as about 200 nm. Thus, the methodologies described above may advantageously form fully customizable 3D optical structure at the sub-micron level suitable for forming 3D optical operations such as holograms.

[0088] In addition to the methods disclosed above for forming fully customizable 3D optical structure at the sub-micron level, methods below describe alternative methods for forming similarly sized symmetrical 3D structures. FIG. **9** shows a method **900** for forming a sub-micron 3D optical material structure on a substrate without planarization. FIGS. **10**A through **10**G illustrates the method **900** of FIG. **9** for making symmetric 3D optical structure. The symmetric 3D optical structure **1000** is symmetric about a center of the symmetric 3D optical structure **1000**.

[0089] The method **900** starts at block **910**, wherein an optical material stack, i.e., film stack **1008**, to be patterned into a diffractive optics element is deposited on a substrate **1001**. The substrate **1001** may be a single optical material. The depositing material may be used to make a master for forming an 3D optical structure wherein the master is

transposed from the final 3D optical structure. The film stack **1008** may be a resist material for forming features in the substrate below or the film stack **1008** may be a plurality of materials suitable to form the final 3D optical features.

[0090] At block **915**, a "blocking layer", such as hardmask **1171** in FIG. **11**A, that is resistant to etch of the other materials may optionally be deposited and patterned with lithography. The formation of the blocking layer may be performed in a series of steps which deposit, expose, develop, and remove unwanted block material. This step will be described further below with respect to step **1110** shown in FIG. **11**A.

[0091] Resuming with block **920**, a mask material **1080** is deposited and patterned on a portion of the film stack **1008**. In FIG. **10**A, step **1010** shows the mask material **1080** placed on a top surface **1011** of the film stack **1008**. The mask material **1080** has an upper surface **1088**, a bottom surface **1089**, and side surfaces **1081**. The mask material **1080** may be a photo resist or other suitable mask material. The formation of the mask material **1080** may be performed in a series of steps which deposit, expose, and remove unwanted mask material **1080**.

[0092] At block **930**, the film stack **1008** is etched down one level. The film stack **1008** is shown in FIG. **10**B at step **1020** etched one layer down. It should be appreciated that the layer, and each layer subsequently described with respect to method **1000**, has a thickness, or height, of between about 20 nm to about 1 micron, such as about 200 nm. The mask material **1080** prevents a first layer portion **1026** of the film stack **1008** from being etched. The top surface **1011** of the film stack **1008** is preserved under the mask material **1080** while areas of the film stack **1008** is etched down to expose a new, i.e., second top surface **1021** one layer down.

[0093] At block **940**, a side portion of the mask material **1080** is trim etched laterally by a desired distance. The desired distance for the trim etch may correspond to a lateral step size, for example, first layer top portion **1027**. FIG. **10**C show the mask material **1080** trimmed on the side surfaces **1081** to reveal a plurality of new, i.e., second sides **1082** at step **1030**. The trimming of the mask material **1080** makes the width thereof smaller, i.e., the distance between second sides **1082** is less than the distance between side surfaces **1081** original to the mask material **1080** prior to trimming. The second sides **1082** expose a first layer top portion **1027** which is no longer covered by the mask material **1080**. The mask material **1080** is trimmed along each of the sides between about 20 nm to about 1 micron, such as about 200 nm. Thus making the first layer top portion **1027** between about 20 nm to about 1 micron, such as about 200 nm. Alternately, the mask material **1080** is selectively trim etched, for example by directional etching.

[0094] At block **950**, a second vertical etch is performed on the mask material **1080** and optical material, i.e., film stack **1008**, vertically down a 2nd level. FIG. **10**D illustrates the film stack **1008** etched one layer further down to expose a second layer portion **1036** at step **1040**. The mask material **1080** prevents the film stack **1008** directly thereunder, i.e., the first layer portion **1026** covered by the mask material **1080** and the second layer portion **1036** covered by the first layer portion **1026**, from being etched. The top surface **1011** of the film stack **1008** is preserved under the mask material **1080** while areas of the film stack **1008** is etched down to expose a new, i.e., third top surface **1031**, and the second layer portion **1036**. Additionally, a second layer top portion **1037** is exposed while etching through the first layer top portion **1027**.

[0095] At block **955**, a second trim etching is performed to form a desired second lateral step size. The sequence of steps may be repeated. At block **960**, the trim operation (block **940**) and etch operation (block **950**) are repeated 'N' times to form the desired stair-step structure where not optionally blocked by the blocking layer at block **915**. N is an integer corresponding to the number of levels for the sub-micron 3D optical structure. For example, the sub-micron 3D optical structure may have N equal to the number of levels for the sub-micron 3D optical structure. The sub-micron 3D optical structure may have 4, 8, 16 32 or more levels.

[0096] In one purely illustrative example, N is equal to 3 corresponding to 3 levels of etch and trim. At block **1050** shown in FIG. **10**E, the mask material **1080** is trimmed on the second sides **1082** to reveal a plurality of new, i.e., third sides **1083**, further shrinking a width of the mask material **1080**. The third sides **1083** again exposes the first layer top portion **1027** which is no longer covered by the mask material **1080**.

[0097] At block **1060** shown in FIG. **10**F, the film stack **1008** is etched further one layer down to expose a third layer portion **1046**. The mask material **1080** prevents the film stack **1008** directly thereunder from being etched. The top surface **1011** of the film stack **1008** is preserved under the mask material **1080** while areas of the film stack **1008** is etched down to expose a new, i.e., fourth top surface **1041** and a third layer top portion **1047** of the third layer portion **1046**.

[0098] At block **970**, the mask material **1080** is stripped from the film stack **1008**. The optional blocking material is stripped as well if it is present. At step **1070** shown in FIG. **10**G, the mask material **1080** is stripped off to reveal the 3D optical structure **1099**. A profile for the third layer portion **1046**, the second layer portion **1036**, and the first layer portion **1026** is symmetric about a center of the 3D optical structure **1099**. It should be appreciated that the preceding steps of etching and trimming can be repeated any number of times to produce symmetrical 3D structures having a multitude of layers prior to stripping the mask material **1080** wherein each layer has a thickness, or height, of between about 20 nm to about 1 micron, such as about 200 nm. It should also be appreciated that the trimming of the sides for the mask material **1080** may optionally be skipped for one or more layers where a straight vertical wall is desired over a stepped wall.

[0099] At block **980**, a mask material may optionally be added to cover selected stepped regions, and etching down the originally blocked area to a lower step level. This operation is described with respect to block **1140** shown in FIG. **11**D below.

[0100] Resuming with block **990**, the 3D optical structure **1099** may optionally be used as a master for imprinting the inverse shape in an optical material or stack. The 3D optical structure **1000** is shown symmetrical but may incorporate a stepped structure through the use of the optional blocked material. It should be appreciated that the steps may be irregular as will be further discussed below with respect to FIGS. **12**A through **13**C.

[0101] As will be disclosed now with respect to method **1100**, the embodiment of method **1000** disclosed in FIGS. **10**A through **10**G can be further modified to yield a one

sided, two sided or three sided stepped 3D optical structure. FIGS. **11**A through **11**E illustrate a method **1100** for making a one or more stepped sided 3D optical structure **1199**. A film stack **1108** disposed on a substrate **1101** is provided for method **1100**.

[0102] At block **1110** shown in FIG. **11**A, a hardmask **1171** is disposed on a portion of a top surface **1102** of the film stack **1108**. A mask material **1180** is placed on a portion of the hardmask **1171** and the top surface **1102** of the film stack **1108**. In one embodiment, the hardmask **1171** extends halfway along a bottom surface of the mask material **1180**. In another embodiment, the hardmask **1171** barely extends under the mask material **1180**. The mask material **1180** may be a photoresist and operate similarly to mask material **1080** disclosed with respect to the method **1000** above in FIGS. **10**A through **10**G.

[0103] At block **1120** shown in FIG. **11**B, the mask material **1180** is stripped off to reveal a 3D step structure **1181**. The film stack **1108** was etched and the mask material **1180** was trimmed prior to block **1120** over a series of steps as illustrated in FIGS. **10**A to **10**G. The hardmask **1171** prevents any etching of the underlying film stack **1108**. The top surface **1102** is etched down 3 layers to a fourth top surface **1105**. As the mask material **1180** is disposed partially over the hardmask **1171**, the steps illustrated in method **1000** only produces a portion, i.e., the 3D step structure **1181**, in which the etch process was blocked or prevented by the hardmask **1171**. The 3D step structure **1181** has a first step **1126**, a second step **1136** and a third step **1146**. Each of the first step **1126**, the second step **1136** and the third step **1146** has a thickness, or height, of between about 20 nm to about 1 micron, such as about 200 nm. Additionally, the first step **1126** may extend from the second step **1136** and the second step **1136** may extend from the third step **1146** by a distance of between about 20 nm to about 1 micron, such as about 200 nm.

[0104] At block **1130** shown in FIG. **11**C, the hardmask **1171** is stripped from the film stack **1108**. The hardmask **1171** may be selectively removed leaving the top surface **1102**, the 3D step structure **1181** and the fourth top surface **1105**, i.e., the film stack **1108**.

[0105] At block **1140** shown in FIG. **11**D, a second mask material **1190** is disposed on the 3D step structure **1181** and the fourth top surface **1105**. The second mask material covers a top of the 3D step structure **1181**. The top may be of any suitable length. In one embodiment, the top has a single unit length of between about 20 nm to about 1 micron, such as about 200 nm.

[0106] At block **1150** shown in FIG. **11**E, the top surface **1102** exposed by the second mask material **1190** is etched down to the fourth top surface **1105**. The second mask material **1190** is stripped to reveal the one sided stepped 3D optical structure **1199**. The one sided stepped 3D optical structure **1199** may be a Fresnel lens or other optical device for projecting light. Alternately, the stepped 3D optical structure **1199** may have the 3D step structure **1181** on two or three sides.

[0107] FIGS. **12**A through **12**C provides an illustration of a symmetrical 3D optical structure formed in the method of FIGS. **10**A through **10**G. For example, the 3D optical structure may have sides each having the steps formed therein. The sides of the 3D optical structure steps correspond to the size of the mask width and may be adjusted by adjusting the mask width. Although only three shapes are illustrated in FIGS. **12**A through **12**C, it should be appreciated that the shape of the 3D structure may be polygonal having any number of sides. Additionally, it should be appreciated that the slope of the sides may be altered by adjusting the step sizes formed thereon. For example, a step having a larger rise (level height) than a run (width) will yield a steeper incline angle for the side walls. The 3D optical structure represents one or more of the optical structures which may be formed on a diffractive optics element.

[0108] FIG. **12**A illustrates a trapezoidal prism **1210**. The trapezoidal prism **1210** is a three dimensional solid that has two congruent trapezoids for its front side **1212** and a far side (not visible). The trapezoidal prism **1210** has a top **1214**, a bottom (not visible), a first side **1211** and a second side **1213**, each rectangular in shape connecting the corresponding sides of the front side **1212** and the far side. Each of the first side **1211**, the second side **1213**, the front side **1212** and the far side may be angled from the bottom to the top **1214** such that the plan area of the bottom is larger than the plan area of the top **1214**. Each of the first side **1211**, the second side **1213**, the front side **1212** and the far side may have grating, i.e., a large number of equidistant parallel lines or grooves on its surface, corresponding to sub-micron steps in the formation thereof. For example, a callout **1218** shows grating **1217** on a first surface **1216** on the front side **1212** and a surface **1215** of the first side **1211**.

[0109] FIG. **12**B illustrates a square frustum **1220** having step sides. The square frustum **1220** is a three dimensional solid that has four congruent trapezoids for its front side **1222**, a far side (not visible), a first side **1221** and a second side **1223**. The square frustum **1220** has substantially planar a top **1224** and a bottom (not visible) each connecting the corresponding sides of the front side **1222** the far side, the first side **1211** and the second side **1219**. Each of the first side **1211**, the second side **1223**, the front side **1222** and the far side may be angled from the bottom to the top **1224** such that the plan area of the bottom is larger than the plan area of the top **1224**. Each of the first side **1221**, the second side **1223**, the front side **1222** and the far side may have grating, i.e., a large number of equidistant parallel lines or grooves on its surface, corresponding to sub-micron steps in the formation thereof. For example, a callout **1228** shows grating **1227** on a first surface **1226** on the front side **1222** and a surface **1225** of the first side **1221**.

[0110] FIG. **12**C illustrates a triangular pyramid **1230** having step sides. The triangular pyramid **1230** is a three dimensional solid that has three congruent triangles for its front side **1232**, a far side **1233**, and a first side **1231**. The triangular pyramid **1230** has an apex at a top **1281** and a substantially planar bottom (not visible) each connecting the corresponding sides of the front side **1232** the far side **1233**, and the first side **1231**. Each of the first side **1231**, the far side **1233**, and the front side **1232** may be angled from the bottom to the top **1234** forming the apex at the top **1234**. Each of the first side **1231**, the front side **1232** and the far side **1233** may have grating, i.e., a large number of equidistant parallel lines or grooves on its surface, corresponding to sub-micron steps in the formation thereof. For example, a callout **1238** shows grating **1237** on a first surface **1236** on the front side **1232** and a surface of the first side **1231**.

[0111] FIGS. **13**A through **13**C provides an illustration of a 3D optical structure having one or more stepped sides formed in the method of FIGS. **11**A through **11**E. For

example, 3D optical structure may have only one side with the steps. Alternately, the 3D optical structure may have two or even three sides with the steps. The 3D optical structure represents one or more of the optical structures which may be formed on a meta surface. The sides of the 3D optical structure absent the steps may be essentially flat and vertical. Although only three shapes are illustrated in FIGS. **3**A through **3**C, it should be appreciated that the shape of the 3D structure may be polygonal having any number of sides.

[0112] FIG. **13**A illustrates a trapezoidal prism **1310** having at least one substantially flat side. The trapezoidal prism **1310** is a three dimensional solid that has two congruent trapezoids for its front side **1312** and a far side (not shown). The trapezoidal prism **1310** has a top **1314**, a bottom (not shown), a first side **1311** and a second side **1319**, each rectangular in shape and connecting the corresponding sides of the front side **1312** and the far side. One or more of the first side **1311**, the second side **1319**, the front side **1312** and the far side may be angled from the bottom to the top **1314** such that the plan area of the bottom is larger than the plan area of the top **1314**. One, two or three of the first side **1311**, the second side **1319**, the front side **1312** and the far side may have grating corresponding to sub-micron steps in the formation thereof. Additionally, one, two or three of the first side **1311**, the second side **1319**, the front side **1312** and the far side may be substantially flat without grating, i.e., structures formed therein. For example, a callout **1318** shows grating **1317** thereon a first side **1311** while the front side **1312** and the second side **1319** are substantially vertical and without grating. The front side **1312** and second side **1319** may have been formed with a blocking material preventing etching and the formation of grating, i.e., the steps.

[0113] FIG. **13**B illustrates a square frustum **1320** having at least one substantially flat side. The square frustum **1320** is a three dimensional solid that has four congruent trapezoids for its front side **1322**, a far side (not visible), a first side **1321** and a second side **1323**. The square frustum **1320** has substantially planar a top **1324** and a bottom (not visible) each connecting the corresponding sides of the front side **1322**, the far side, the first side **1321** and the second side **1323**. Each of the first side **1321**, the second side **1323**, the front side **1322** and the far side may be angled from the bottom to the top **1324** such that the plan area of the bottom is larger than the plan area of the top **1324**. One, two or three of the first side **1321**, the second side **1323**, the front side **1322** and the far side may have grating corresponding to sub-micron steps in the formation thereof. Additionally, one, two or three of the first side **1321**, the second side **1323**, the front side **1322** and the far side may be substantially flat without grating, i.e., structures formed therein. For example, a callout portion **1328** shows grating **1327** thereon the first side and far side while the front side **1322** and the second side **1323** are substantially vertical and without grating. The front side **1322** and second side **1323** may have been formed with a blocking material preventing etching and the formation of grating, i.e., the steps.

[0114] FIG. **13**C illustrates a triangular pyramid **1330** having at least one substantially flat side. The triangular pyramid **1330** is a three dimensional solid that has three congruent triangles for its front side **1332**, a far side **1333**, and a first side **1331**. The triangular pyramid **1330** has an apex at a top **1381** and a substantially planar bottom (not visible) each connecting the corresponding sides of the front side **1332** the far side **1333**, and the first side **1331**. Each of the first side **1331**, the far side **1333**, and the front side **1332** may be angled from the bottom to the top **1334** forming the apex at the top **1334**. One or two of the first side **1331**, the far side **1333** and the front side **1332** may have grating corresponding to sub-micron steps in the formation thereof. Additionally, one or two of the first side **1331**, the far side **1333** and the front side **1332** may be substantially flat without grating, i.e., structures formed therein. For example, a callout **1338** shows grating **1337** thereon the first side **1312** and the far side **1333** while the front side **1332** is substantially vertical and without grating. The front side **1332** may have been formed with a blocking material preventing etching and the formation of grating, i.e., the steps.

[0115] FIG. **14** illustrates another embodiment for the 3D optical material level structure **1400** formed on a diffractive optics element formed using the repetitive coating and exposure technique, the 3D optical material level structure **1400** having a gap therein. The 3D functional optical material level structure **1400** may have a first level **1410** disposed on the substrate **1401**. The first level **1410** may be patterned and exposed in a lithography operation. A plurality of second level features **1420** may be formed on a top surface **1411** of the first level feature **1410**. For example, a resist material may be spun onto the first level features **1410**. The second level features **1420** may be exposed in a lithography operation to form a first exposed portion **1422**, a non-exposed resist portion **1423** and a second exposed portion **1422**. A third level **1430** may be spun on top the second level features **1420**. The third level features may be patterned and exposed to form exposed features **1431** therein. The 3D functional optical material level structure **1400** may then be developed to remove all resist that was not patterned and exposed in the lithography operation, for example, non-exposed resist portion **1423**. The resultant structure may generate features of varying width and void therebetween. For example, a void (no material) now exists where non-exposed resist portion **1423** and the third level feature **1431** is disposed on top, or suspended, by a first upper surface **1426** of the first exposed portion **1422** and a second upper surface **1425** of the second exposed portion **1422**. The development process produces a coherent mass of material and although discussion here was done with levels of materials, the individual levels are not present in the final 3D functional optical material level structure **1408**. Furthermore, it should be appreciated that the size (width, length and height) of each portion forming the final 3D functional optical material level structure **1400** is fully customizable and merely a function of the thickness of material spun on to a lower level and the feature size in the pattern used in one or more lithography operations. Thus, fully customizable 3D functional optical material level structure **1400** can be formed on a diffractive optics element at a sub-micron scale.

[0116] FIG. **15**A through **15**I illustrates a method for building fully customizable 3D functional optical material level structure **1500** on a substrate **1501** using the trim etch technique discussed above. The method starts at block **1510**, as shown in FIG. **15**A, wherein an optical material stack, i.e., film stack **1508**, to be patterned into a diffractive optics element is deposited on a substrate **1501**. The substrate **1501** may be a single optical material or diffractive optics element. The depositing material may be used to make a master for forming a 3D optical structure wherein the master is transposed from the final 3D optical structure. The film stack

1508 may be a resist material for forming features in the substrate below or the film stack **1508** may be a plurality of optical materials suitable to form the 3D functional optical material level structure **1500**.

[0117] Block **1510** additionally includes a mask material **1509** is deposited and patterned on a top surface **1511** of the film stack **1508**. The mask material **1509** has an upper surface **1588**, a bottom surface **1589**, a right side surface **1581** and a left side surface **1582**. It should be appreciated that the mask material **1509** may be any shape having any number of sides surfaces and the following operations may be performed on one or more of the individual side surfaces. For simplicity, the following discussion will be with respect to the right side surface **1581** and the left side surface **1582**. Additionally, the discussion shall utilize a right side **1591** and a left side **1592** of the 3D functional optical material level structure **1500**. The mask material **1509** may be a photo resist or other suitable mask material. The formation of the mask material **1509** may be performed in a series of steps which deposit, expose, and remove unwanted mask material **1509**.

[0118] At block **1520**, shown in FIG. **15**B, the film stack **1508** is etched down one level. It should be appreciated that the layer, and each layer subsequently described with respect to the method described above, may have a thickness, or height, of between about 20 nm to about 1 micron, such as about 200 nm. The mask material **1509** prevents a first layer portion **1526** of the film stack **1508** from being etched. The top surface **1511** of the film stack **1508** is preserved under the mask material **1509** while other areas of the film stack **1508** is etched down to expose a new, i.e., second top surface **1521** one layer down.

[0119] At block **1530**, shown in FIG. **15**C, the right side surface **1581** and the left side surface **1582** of the mask material **1509** is trimmed, i.e., etched laterally, by a desired distance. The desired distance for the trim may correspond to a lateral step size, for example, a first layer top portion **1527**. The right side surface **1581** and the left side surface **1582** are trimmed away to reveal a plurality of new, i.e., a second left sides **1584** and a second right side **1583**. The trimming of the mask material **1509** makes the width thereof smaller, i.e., the distance between the right side surface **1581** and the left side surface **1582** is greater than the distance between the second right side surface **1583** and the second left side surface **1584** of the mask material **1509** prior to trimming. The second right side surface **1583** and the second left side surface **1584** expose a first layer top portion **1527** which is no longer covered by the mask material **1509**. The mask material **1509** may be trimmed along each of the sides between about 20 nm to about 1 micron, such as about 200 nm. Thus making the first layer top portion **1527** between about 20 nm to about 1 micron from a respective side of the mask material **1509**. Alternately, the mask material **1509** is selectively trimmed etched, for example by directional etching.

[0120] At block **1540**, shown in FIG. **15**D, a second vertical etch is performed on the optical material, i.e., film stack **1508**, vertically down a 2nd level. The film stack **1508** is etched one layer further down to expose a second layer portion **1536** and a second layer top portion **1537** while etching through the first layer top portion **1527**. The mask material **1509** prevents the film stack **1508** directly thereunder, i.e., the first layer portion **1526** covered by the mask material **1509** and the second layer portion **1536** covered by the first layer portion **1526**, from being etched. The top surface **1511** of the film stack **1508** is preserved under the mask material **1509** while other areas of the film stack **1508** is etched down to expose a new, i.e., third top surface **1531**, the second layer top portion **1537**, and the second layer portion **1536**.

[0121] The sequence of steps above may be repeated any number of times to produce the desired structure. For example, the trim operation at block **1530** and etch operation at block **1540** are repeated 'N' times to form the desired stair-step structure having optional flat sections disposed throughout the structure. N is an integer corresponding to the number of levels for the sub-micron 3D optical structure. For example, the sub-micron 3D optical structure may have N equal to the number of levels for the sub-micron 3D optical structure. The sub-micron 3D optical structure may have 4, 8, 16 32 or more levels.

[0122] In one purely illustrative example, N is equal to 3 corresponding to 3 levels of etch and trim. At block **1550**, shown in FIG. **15**E, a third trim etching is performed to form a desired third lateral step size. The third trim operation may be a directional etch operation targeting one or more particular sides of the mask material **1509**. For example, the directional etch may trim the second right side **1583** to reveal a third right side **1585** while leaving second left sides **1584** intact. The trim operation may reveal the first layer top portion **1527** yet again on the right side **1591** while leaving the mask material **1509** covering the first layer **1526** on the left side **1592**.

[0123] At block **1560** shown in FIG. **15**F, the film stack **1508** is etched further one layer down to expose a third layer portion **1546**. The mask material **1509** prevents the film stack **1508** directly thereunder from being etched. The top surface **1511** of the film stack **1508** is preserved under the mask material **1509** while areas of the film stack **1508** is etched down to expose a new, i.e., fourth top surface **1541** and a third layer top portion **1547** of the third layer portion **1546**. The left side **1592** is substantially vertical up from the third top layer portion **1547** while the rights side **1591** has a series of steps corresponding to the third layer portion **1546**, the second layer portion **1536** and the first layer portion **1526**.

[0124] At block **1570** shown in FIG. **15**G, a fourth trim operation is performed to form a desired fourth lateral step size. The second trim operation is a directional etch operation targeting the second left side **1584**. The second left side **1584** of the mask material **1509** is trimmed to a new third left side **1586** while leaving the third right side **1585** intact. The trim operation may reveal the first layer top portion **1527** yet again on the right side **1591** while leaving the mask material **1509** covering the first layer **1526** on the left side **1592**.

[0125] At block **1580** shown in FIG. **15**H, the film stack **1508** is etched further one layer down to expose a fourth layer portion **1556**. The mask material **1509** prevents the film stack **1508** directly thereunder from being etched. The top surface **1511** of the film stack **1508** is preserved under the mask material **1509** while areas of the film stack **1508** is etched down to expose a new fifth top surface **1551** and a fourth layer top portion **1557** of the fourth layer portion **1556**. The left side **1592** now has a single step from the second top layer portion **1537** while the right side **1591** has a series of steps corresponding to the fourth layer portion **1556**, the third layer portion **1546**, the second layer portion **1536** and the first layer portion **1526**.

[0126] At block **1590** shown in FIG. **15**I, the mask material **1509** is stripped from the film stack **1508** to reveal the 3D optical structure **1500**. A profile for the fourth layer portion **1556**, the third layer portion **1546**, the second layer portion **1536**, and the first layer portion **1526** is asymmetric about a center of the 3D optical structure **1500**. It should be appreciated that the preceding steps of etching and trimming can be repeated any number of times to produce symmetrical 3D structures having a multitude of layers prior to stripping the mask material **1509** wherein each layer has a thickness, or height, of between about 20 nm to about 1 micron, such as about 200 nm. It should also be appreciated that the trimming of the sides for the mask material **1509** may optionally be skipped for one or more layers where a straight vertical wall is desired over a stepped wall.

[0127] FIG. **16** and FIGS. **7**A through **7**J will now be discussed together. FIG. **16** shows method **1600** for forming a sub-micron 3D optical material structure on a substrate without planarization. FIGS. **7**A through **7**J may be used to illustrate the method **1600** of FIG. **16** for building 3D functional optical material level structure on a substrate using a second embodiment of the repetitive coating and exposure technique.

[0128] At block **1605** shown in FIG. **7**A, an optical substrate prepared for building 3D functional optical material level structure on a substrate using a second embodiment of the repetitive coating and exposure technique. The substrate **701** may have a SiO_2 layer grown thereon, for example, formed by thermal oxide growth. The technique forces an oxidizing agent to diffuse into the substrate at high temperatures and react with it. The SiO_2 layer may be grown to about 100 nm.

[0129] At block **1610** shown in FIG. **7**B, a stackable optical material **711**, or master material, that is a resist material sensitive to optical or other radiation, is deposited on the substrate **701**. The stackable optical material **711** may be deposited, spin coated or placed thereon the substrate **701** by any suitable technique. In one embodiment, the stackable optical material **711** is spin coated onto the substrate **701**. The stackable optical material **711**, and each layer described below with respect to FIGS. **7**A through **7**J, may have a thickness, or height, of between about 20 nm to about 1 micron, such as about 200 nm.

[0130] At block **1615** shown in FIG. **7**C, the stackable optical material **711** is exposed to form a pattern therein. The pattern is designed to produce a first level of a multi-level optical structure designed, or in the case of imprint, provide an inverse pattern for a master to be used in the manufacture of multiple optical structures.

[0131] At block **1620** shown in FIG. **7**C, the stackable optical material **711** is optionally baked. The exposure and baking process **719** results in the stackable optical material **711** forming a plurality of first cured materials **716** in the locations which were exposed through the mask and then baked.

[0132] At block **1625** shown in FIG. **7**D, a second layer of optical material **721** is deposited on the stackable optical material **711**, inclusive of the first cured materials **716**. The second layer of optical material **721** may be spin coated onto the stackable optical material **711** or formed by other suitable techniques.

[0133] At block **1630** shown in FIG. **7**E, the second layer of optical material **721** is exposed to form a pattern therein. The pattern is designed to produce the second level of the multi-level optical structure, or in the case of imprint, provide the second level in construction of the inverse pattern for the master to be used in the manufacture of multiple optical structures.

[0134] At block **1635** shown in FIG. **7**E, the stackable optical material **711** is optionally baked. The exposure and baking process **719** results in the stackable optical material **711** forming a plurality of first cured materials **716** in the locations which were exposed through the mask and then baked.

[0135] At block **1640**, the step **1625** for depositing optical material on an underlying layer, the step **1630** for exposing the optical material to form a pattern therein, and the step **1635** for optionally baking the patterned optical material are repeating for N levels to produce a multi-level 3D functional optical material level structure. The 3D functional optical material level structure has N levels such as 4 levels, 8 levels, 16 levels, 32 levels, or maybe more.

[0136] At block **1645**, shown in FIG. **7**J, the exposed and cured regions of the N patterns on N layers are simultaneously developed. The development removes the un-patterned material from the 3D functional optical material level structure, or master. The developed 3D structure, or master, is formed from the cured materials layers left behind on the substrate **701**.

[0137] At block **1650**, the master left behind from the development step above is used for imprinting the inverse shape in an optical material or stack. Thus, the optical material may be repeatedly and accurately used to form a plurality of 3D functional optical material level structures.

[0138] Advantageously, the methods described above provide techniques having reduced steps for building sub-micron devices. The techniques require fewer operations (such as planarization) saving raw materials, machine operational costs, and time. The 3D optical devices may be symmetrical or asymmetrical and are formed from units having dimensions between about 20 nm to about 1 micron, such as about 200 nm in each of the coordinate directions, such as in an X, Y and Z direction. The 3D optical devices therefore can be made small enough to be utilized for creating high resolution holographic images from small devices.

[0139] In addition to the examples described above, some additional non-limiting examples may be described as follows:

Example 1.1 A method for forming a sub-micron asymmetrical 3D optical material structure on a substrate without planarization, the method comprising:

[0140] forming a plurality of first functional material levels on a top surface of a substrate at a depth of less than one micron;

[0141] treating a first outer surface of the first functional material levels, the first outer surface having a first top surface;

[0142] forming a plurality of second functional material levels on the first top surface for one or more of the first functional material levels only and at a depth of less than one micron;

[0143] treating a second outer surface of the second functional material levels, the second outer surface having a second top surface; and

[0144] forming a plurality of third functional material levels on the second top surface for one or more of the second functional material levels only and at a depth of less than one micron.

Example 1.2 The method of example 1.1 wherein forming the first functional material level may not have a second third functional material level formed thereon.

Example 1.3 The method of example 1.2 wherein the first, second and third functional material levels result in pillars of various heights on the substrate.

Example 1.4 The method of example 1.2 wherein the second third functional material level and the third functional material are not formed directly on the top surface of the substrate.

Example 1.5 The method of example 1.1 wherein the depth for each of the first, second and third functional material levels is about 200 nm.

Example 1.6 The method of example 1.1 wherein treating the first and second functional material levels further comprises at least one of:

[0145] forming an atomic deposition layer;

[0146] doping or ion implantation; and

[0147] radiation hardening.

Example 1.7 The method of example 1.6 wherein treating the first and second functional material level changes the composition of the first outer surface and the second outer surface respectively such that a solvent or other chemical of a functional material level overlaid thereon will not attack the first and second functional material level.

Example 1.8 The method of example 1.1 further comprising:

[0148] imprinting the inverse shape of the sub-micron asymmetrical 3D optical material structure in an optical material or stack.

Example 2.1 A method for forming a sub-micron asymmetrical 3D optical material structure on a substrate without planarization, the method comprising:

[0149] forming a first functional material level on a top surface of a substrate at a depth of less than one micron;

[0150] impregnating the first functional material level to form a first treated functional material level, the first treated functional material level having a first top surface;

[0151] forming a second functional material level on the first top surface for one or more of the first treated functional material level only and at a depth of less than one micron;

[0152] impregnating the second functional material level to form a second treated functional material level, the second treated functional material level having a second top surface; and

[0153] forming a third functional material level on the second top surface for one or more of the second treated functional material level only and at a depth of less than one micron.

Example 2.2 The method of example 2.1 wherein the first functional material level may not have a second third functional material level formed thereon.

Example 2.3 The method of example 2.2 wherein forming the first, second and third functional material levels result in pillars of various heights on the substrate.

Example 2.4 The method of example 2.2 wherein the second third functional material level and the third functional material are not formed directly on the top surface of the substrate.

Example 2.5 The method of example 2.1 wherein impregnating the first and second functional material levels further comprises:

baking or electron volt implantation to alter the structure of the first, second and third functional material levels.

Example 2.6 The method of example 2.5 wherein impregnating the first and second functional material levels treatment alters the structure of the first and second functional material levels to a more robust material substantially chemically inert to a subsequent layer which may be disposed thereon.

Example 2.7 The method of example 2.1 further comprising:

[0154] imprinting the inverse shape of the sub-micron asymmetrical 3D optical material structure in an optical material or stack.

Example 3.1 A method for forming a sub-micron asymmetrical 3D optical material structure on a substrate without planarization, the method comprising:

[0155] forming a first functional material level on a top surface of a substrate at a depth of less than one micron, the first functional material level having a first top surface and being of a first material;

[0156] forming a second functional material level on the first top surface of the first functional material level at a depth of less than one micron, the second functional material level having a second top surface and being of a second material compatible for stacking on the first material; and

[0157] forming a third functional material level on the second top surface of the second functional material level at a depth of less than one micron, the third functional material level being of the first material compatible for stacking on the second material.

Example 3.2 The method of example 3.1 wherein the first functional material level may not have a second third functional material level formed thereon.

Example 3.3 The method of example 3.2 wherein forming the first, second and third functional material levels result in pillars of various heights on the substrate.

Example 3.4 The method of example 3.2 wherein the second third functional material level and the third functional material are not formed directly on the top surface of the substrate.

Example 3.5 The method of example 3.1 wherein the first functional material level may be a sol-gel base material and the first functional material level may be a polymer based material.

Example 3.6 The method of example 3.5 wherein the third functional material is of a sol-gel base material.

Example 3.7 The method of example 3.1 wherein the first functional material, the second functional material and the third functional material have a height of between about 20 nm to about 1 micron.

Example 3.8 The method of example 3.7 wherein the height is about 200 nm.

Example 3.9 The method of example 3.1 further comprising:

[0158] imprinting the inverse shape of the sub-micron asymmetrical 3D optical material structure in an optical material or stack.

Example 4.1 A method for forming a sub-micron asymmetrical 3D optical material structure from sol-gel on a substrate without planarization, the method comprising:

[0159] forming a first functional material level on a top surface of a substrate at a depth of less than one micron,

the first functional material level having a first top surface and being of a sol-gel material;

[0160] forming a second functional material level on the first top surface of the first functional material level at a depth of less than one micron, the second functional material level having a second top surface and being of the sol-gel material; and

[0161] forming a third functional material level on the second top surface of the second functional material level at a depth of less than one micron, the third functional material level being of the sol-gel material.

Example 4.2 The method of example 4.1 further comprising:

[0162] curing the sol-gel material of the first functional material level to form a compatible polymer that is robust enough to allow the colloidal solution of the second functional material level to be placed thereon.

Example 4.3 The method of example 4.2 wherein the compatible polymer is SiO_x.

Example 4.4 The method of example 4.1 wherein forming a first functional material level comprises:

[0163] depositing the sol-gel material by spin coating.

Example 4.4 The method of example 4.1 wherein the first functional material, the second functional material and the third functional material have a height of between about 20 nm to about 1 micron.

Example 4.5 The method of example 4.4 wherein the height is about 200 nm.

Example 4.6 The method of example 4.1 wherein the first functional material level may not have a second third functional material level formed thereon.

Example 4.7 The method of example 4.6 wherein forming the first, second and third functional material levels result in pillars of various heights on the substrate.

Example 4.8 The method of example 4.1 further comprising:

[0164] imprinting the inverse shape of the sub-micron asymmetrical 3D optical material structure in an optical material or stack.

Example 5.1 A method for forming a sub-micron symmetrical 3D optical material structure into a film stack disposed on a substrate without planarization, the method comprising:

[0165] forming a mask material on to a top surface of the film stack, the mask material having a plurality of sides;

[0166] etching the top surface of the film stack a depth of less than one micron revealing a second top surface and forming a first material level under the mask material;

[0167] trimming the sides of the mask material by less than one micron to reveal a second side surface of the mask material and a first upper surface of the first material level;

[0168] etching the second top surface of the film stack and the first upper surface of the first material level by a depth of less than one micron forming a second material level under the first material level and revealing a third top surface for the film stack and a second upper surface for the second material level;

[0169] trimming the second sides of the mask material by less than one micron to reveal a third side surface of the mask material and the first upper surface of the first material level;

[0170] etching the third top surface of the film stack, the first upper surface of the first material level and the second upper surface of the second material level all by a depth of less than one micron forming a third material level under the second material level and revealing a fourth top surface for the film stack and a third upper surface for the third material level; and

[0171] stripping the mask material from the film stack to reveal a step 3D optical material structure.

Example 5.2 The method of example 5.1 wherein the depth of the etch is about 200 nm.

Example 5.3 The method of example 5.1 wherein trimming the second sides of the mask material a desired distance corresponding to a lateral step size.

Example 5.4 The method of example 5.3 wherein the lateral step size is substantially similar to the depth.

Example 5.5 The method of example 5.3 further comprising:

[0172] directional etching the mask material.

Example 5.6 The method of example 5.1 wherein the second top surface is closer to the mask material than the third top surface.

Example 5.7 The method of example 5.1 further comprising:

[0173] depositing a blocking layer resistant to etch of the other materials; and patterning the blocking layer with lithography.

Example 5.8 The method of example 5.7 wherein response to the patterning of the blocking material, the method further comprises:

[0174] developing the blocking layer and removing un-patterned material.

Example 5.9 The method of example 5.7 further comprising:

[0175] striping the blocking layer.

Example 5.10 The method of example 5.1 further comprising:

[0176] skipping the trimming of the sides of the mask material for one or more etching operations.

Example 5.11 The method of example 5.1 further comprising:

[0177] imprinting the inverse shape of the step 3D optical material structure in an optical material or stack.

Example 6.1 A method for forming a sub-micron one sided symmetrical 3D optical material structure into a film stack disposed on a substrate without planarization, the method comprising:

[0178] forming a hardmask on a top surface of the film stack;

[0179] forming a mask material on to a portion of the top surface of the film stack and a portion of the hardmask, the mask material having a plurality of sides;

[0180] etching the top surface of the film stack a depth of less than one micron revealing a second top surface and forming a first material level under the mask material;

[0181] trimming the sides of the mask material by less than one micron to reveal a second side surface of the mask material and a first upper surface of the first material level;

[0182] etching the second top surface of the film stack and the first upper surface of the first material level by a depth of less than one micron forming a second material level under the first material level and revealing a third top surface for the film stack and a second upper surface for the second material level;

[0183] trimming the second sides of the mask material by less than one micron to reveal a third side surface of the mask material and the first upper surface of the first material level;

[0184] etching the third top surface of the film stack, the first upper surface of the first material level and the second upper surface of the second material level all by a depth of less than one micron forming a third material level under the second material level and revealing a fourth top surface for the film stack and a third upper surface for the third material level; and

[0185] stripping the mask material from the film stack to reveal the sub-micron symmetrical 3D optical material structure.

Example 6.2 The method of example 6.1 further comprising:

[0186] removing the hardmask;

[0187] forming a second mask material a step 3D optical material structure and the fourth top surface of the film stack;

[0188] etching the top surface of the film stack to the depth of the fourth top surface; and

[0189] stripping the second mask material from the film stack to reveal a sub-micron one sided symmetrical 3D optical material structure.

Example 6.3 The method of example 6.1 further comprising:

[0190] imprinting the inverse shape of the one sided symmetrical 3D optical material structure in an optical material or stack.

Example 6.4 The method of example 6.1 wherein the depth of the etch is about 200 nm.

Example 6.5 The method of example 6.1 wherein trimming the second sides of the mask material a desired distance corresponding to a lateral step size.

Example 6.6 The method of example 6.5 wherein the lateral step size is substantially similar to the depth.

Example 6.7 The method of example 6.5 further comprising:

[0191] directional etching the mask material.

Example 6.8 The method of example 6.1 wherein the second top surface is closer to the mask material than the third top surface.

Example 6.9 The method of example 6.1 further comprising:

[0192] skipping the trimming of the sides of the mask material for one or more etching operations.

Example 6.10 The method of example 6.1 further comprising:

[0193] imprinting the inverse shape of the 3D optical material structure in an optical material or stack.

Example 7.1 A sub-micron 3D optical material structure on a diffractive optics element, the 3D optical material structure comprising:

[0194] a substrate having a top surface;

[0195] a first material level formed on the top surface of the substrate, wherein the first material level has a first top surface and comprises:

[0196] a plurality of first unit pieces of material, each first unit piece of material having a height, a width and a length, all of which are less than about one micron;

[0197] a second material level formed on the first top surface of the first material level, wherein the second material level has a second top surface and comprises:

[0198] a plurality of second unit pieces of material, wherein each second unit piece of material is disposed on one of the first unit pieces of material and each second unit piece of material having a second height, a second width and a second length, substantially similar to the height, the width and the length of the first unit piece of material; and

[0199] a third material level formed on the second top surface of the second material level, wherein the third material level comprises:

[0200] a plurality of third unit piece of material, wherein each third unit piece of material is disposed on one of the second unit piece of material and each third unit piece of material having a third height, a third width and a third length, substantially similar to that of the second unit piece of material.

Example 7.2 The 3D optical material structure of example 7.1 wherein the first material level further comprises:

[0201] a plurality of first vias, wherein the first vias are devoid of any of the plurality of first unit pieces.

Example 7.3 The 3D optical material structure of example 7.2 wherein each via of the plurality of first vias is substantially similar in size to that of the first unit piece.

Example 7.4 The 3D optical material structure of example 7.2 wherein each second unit piece is disposed on a first unit piece and not on or in any of the plurality of first vias.

Example 7.5 The 3D optical material structure of example 7.2 wherein the second material level further comprises:

[0202] a plurality of second vias, wherein the second vias are devoid of any of the plurality of second unit pieces and disposed on the plurality of first vias.

Example 7.6 The 3D optical material structure of example 7.5 wherein one or more of the plurality of second vias is additionally disposed on one or more of the first unit pieces.

Example 7.7 The 3D optical material structure of example 7.6 wherein a multitude of layers are be stacked to form the 3D optical material structure having four (4), eight (8), sixteen (16), thirty two (32) or more layers of material.

Example 8.1 A sub-micron 3D optical material structure on a diffractive optics element, the 3D optical material structure comprising:

[0203] a substrate having a top surface;

[0204] a film stack disposed on the top surface of the substrate having an upper surface;

[0205] a first material level formed on the upper surface of the film stack having a first width and a first upper surface;

[0206] a second material level formed on the first upper surface of the first material level having a second width and a second upper surface; and

[0207] a third material level formed on the second upper surface of the second material level having a third width wherein the first width is greater than the second width which is greater than the third width, and wherein the first width, the second width and the third width form a profile symmetric about a center of the 3D optical material structure.

Example 8.2 The 3D optical material structure of example 8.1 wherein a depth of the first material level, the second material level and the third material level is between about 20 nm to about 1 micron.

Example 8.3 The 3D optical material structure of example 8.1 wherein a depth of the first material level, the second material level and the third material level is about 200 nm.

Example 8.3 The 3D optical material structure of example 8.1 further comprising:

[0208] a void in the second material level having no material therein disposed on the first material level and where the third material level spans the void when disposed on top thereof.

Example 8.4 The 3D optical material structure of example 8.1 wherein a size of a width, length and height for each material level forming the 3D optical material structure is a function of the thickness of material spun on to the first, second and third material level and a feature size in the pattern used in one or more lithography operations.

Example 8.5 The 3D optical material structure of example 8.1 further comprising:

[0209] a blocking layer disposed on one or more of the first, second and third material level configured to prevent the formation of subsequent material levels above the blocking layer.

Example 9.1 A method of fabricating a sub-micron 3D optical diffractive optics element, the method comprising:

[0210] A) depositing an optical material stack to be patterned into a diffractive optics element on a substrate;

[0211] B) depositing and patterning a mask material on a portion of the material stack;

[0212] C) etching the material stack down one level;

[0213] D) directionally etch one or more side portions of the mask material laterally by a desired distance;

[0214] E) vertically etching the material stack down vertically a 2nd level;

[0215] F) repeating D and E; and

[0216] G) stripping the mask material.

Example 9.2 The method of example 9.1 further comprising:

[0217] depositing a blocking layer that is resistant to etch of the other materials may and patterned with lithography to a blocked area; and

[0218] adding a mask material covering a selected stepped regions and etching down the originally blocked area to the to a lower step level.

[0219] While the foregoing is directed to embodiments of the present invention, other and further embodiments of the invention may be devised without departing from the basic scope thereof, the embodiments described in claim **16** as illustrated in FIG. **16**, the scope thereof is determined by the claims that follow:

What is claimed is:

1. An optical device, comprising:

a substrate; and

a plurality of optical structures disposed over a surface of the substrate, each optical structure having:

a first sidewall oriented normal to the surface of the substrate; and

a second sidewall opposed to the first sidewall, the second sidewall including a stepped surface angled relative to the surface of the substrate, the stepped surface including a plurality of steps.

2. The optical device of claim **1**, wherein the plurality of steps include at least three steps.

3. The optical device of claim **1**, wherein a distance between each step and the first sidewall is less than 1 micron.

4. The optical device of claim **1**, wherein each step has a height of between 20 nm to 1 micron.

5. The optical device of claim **1**, wherein each step has a thickness of between 20 nm to 1 micron.

6. The optical device of claim **1**, wherein each step extends from an adjoining step by a distance of between 20 nm to 1 micron.

7. The optical device of claim **1**, wherein each step has an equal depth.

8. The optical device of claim **1**, wherein each step is has an equal width.

9. The optical device of claim **1**, wherein at least one step has a different width.

10. The optical device of claim **1**, wherein each optical structure is a Fresnel lens.

11. An optical device, comprising:

a substrate; and

a plurality of optical structures disposed over a surface of the substrate, each optical structure having:

a first sidewall sloped relative to the surface of the substrate; and

a second sidewall opposed to the first sidewall, the second sidewall including a stepped surface angled relative to the surface of the substrate, the stepped surface including a plurality of steps, wherein a distance between each step and the first sidewall is less than 1 micron.

12. The optical device of claim **11**, wherein the plurality of steps include at least three steps.

13. The optical device of claim **11**, wherein each step has a height of between 20 nm to 1 micron.

14. The optical device of claim **11**, wherein each step has a thickness of between 20 nm to 1 micron.

15. The optical device of claim **11**, wherein each step extends from an adjoining step by a distance of between 20 nm to 1 micron.

16. The optical device of claim **11**, wherein each step has an equal depth.

17. The optical device of claim **11**, wherein each step is has an equal width.

18. The optical device of claim **11**, wherein at least one step has a different width.

19. A method comprising:

disposing a film stack over a substrate;

forming a first hardmask over a portion of the film stack;

etching the film stack to form a staircase structure including a plurality of steps angled relative to a top surface of the substrate;

selectively removing the first hardmask from the film stack;

forming a second hardmask over the staircase structure; and

etching the film stack to define a sidewall oriented normal to the top surface of the substrate, wherein a distance between each step and the sidewall is less than 1 micron.

20. The method of claim **19**, wherein the plurality of steps include at least three steps, each step extending from an adjoining step by a distance of between 20 nm to 1 micron.

* * * * *