US 20240329322A1

(19) **United States**

(12) **Patent Application Publication**

LU et al.

(10) **Pub. No.: US 2024/0329322 A1**

(43) **Pub. Date: Oct. 3, 2024**

(54) **LOW REFRACTIVE INDEX MATERIALS ON THE GRATINGS TO IMPROVE THE WAVEGUIDE EFFICIENCY**

(71) Applicant: **Applied Materials, Inc.**, Santa Clara, CA (US)

(72) Inventors: **Jinyu LU**, Santa Clara, CA (US); **Ludovic Godet**, Sunnyvale, CA (US); **Jinxin FU**, Fremont, CA (US); **Kenichi OHNO**, Sunnyvale, CA (US); **Shangyi Chen**, Santa Clara, CA (US); **Takashi KURATOMI**, San Jose, CA (US); **Erica CHEN**, Cupertino, CA (US); **Rami HURARNI**, Santa Clara, CA (US); **Yangyang SUN**, San Jose, CA (US)

(21) Appl. No.: **18/625,979**

(22) Filed: **Apr. 3, 2024**

Related U.S. Application Data

(60) Provisional application No. 63/456,662, filed on Apr. 3, 2023.

Publication Classification

(51) **Int. Cl.**

G02B 6/34	(2006.01)
C23C 16/40	(2006.01)
C23C 16/455	(2006.01)

(52) **U.S. Cl.**

CPC ***G02B 6/34*** (2013.01); *C23C 16/403* (2013.01); *C23C 16/45553* (2013.01)

(57) **ABSTRACT**

Embodiments described herein relate to improved waveguides with materials layers improving the optical properties of one or more surface regions of waveguides and methods of forming the same. In one embodiment, a waveguide is provided. The waveguide including a substrate, a grating disposed in or on the substrate, the grating comprising a plurality of structures defined by a plurality of trenches, a layer of silicon oxide or aluminum oxide disposed over the structures on the substrate. The layer is disposed over sidewalls and top surfaces of the structures, and a bottom surface of the trenches. The waveguide further includes a high index layer disposed over the layer. The high index layer is disposed over the sidewalls and the top surfaces of the structures, and the bottom surface of the trenches with the layer disposed in between the structures and the high index layer.

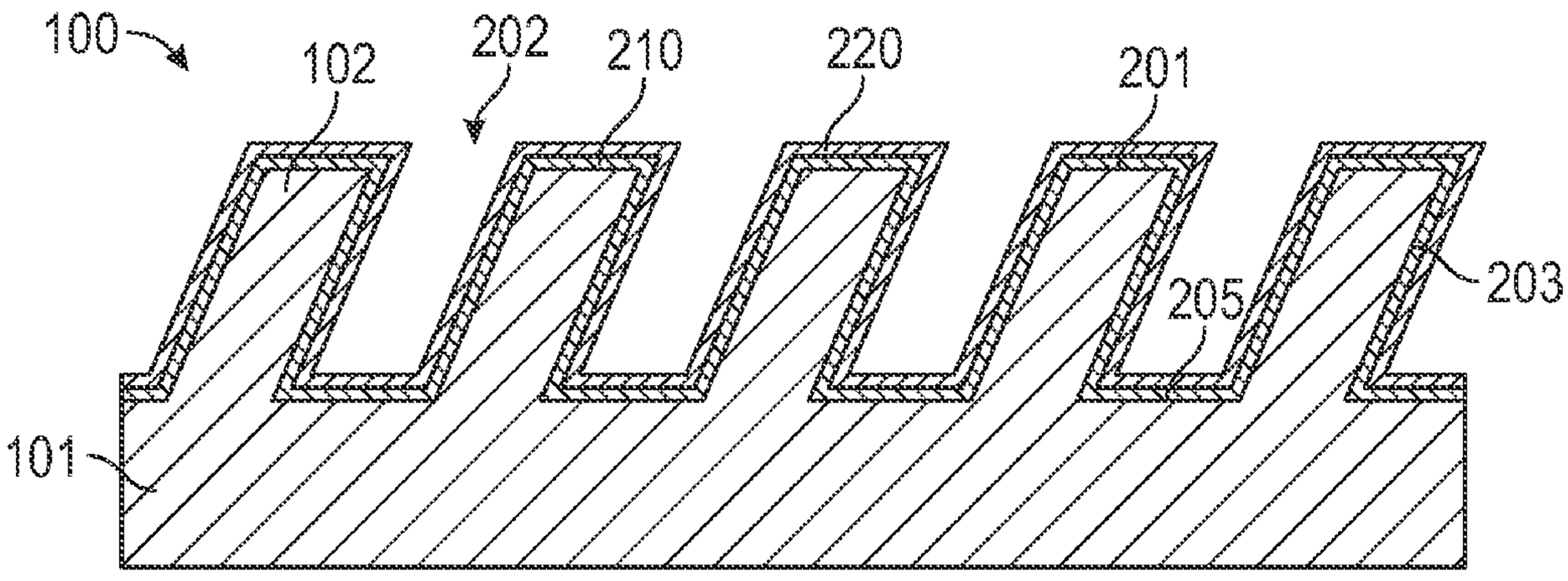

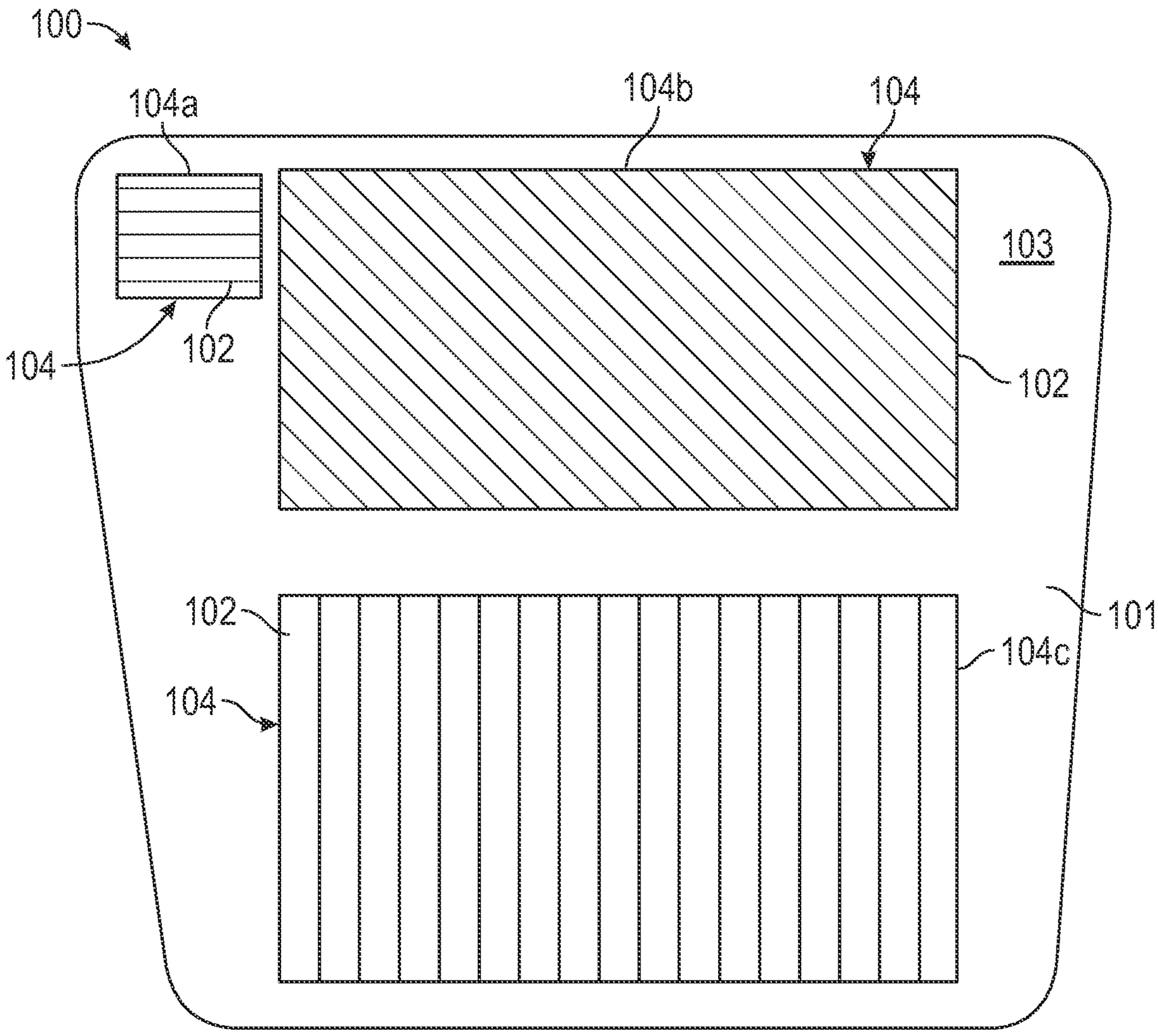
100
104a
104b
104
103
104
102
102
101
102
104c
104

FIG. 1

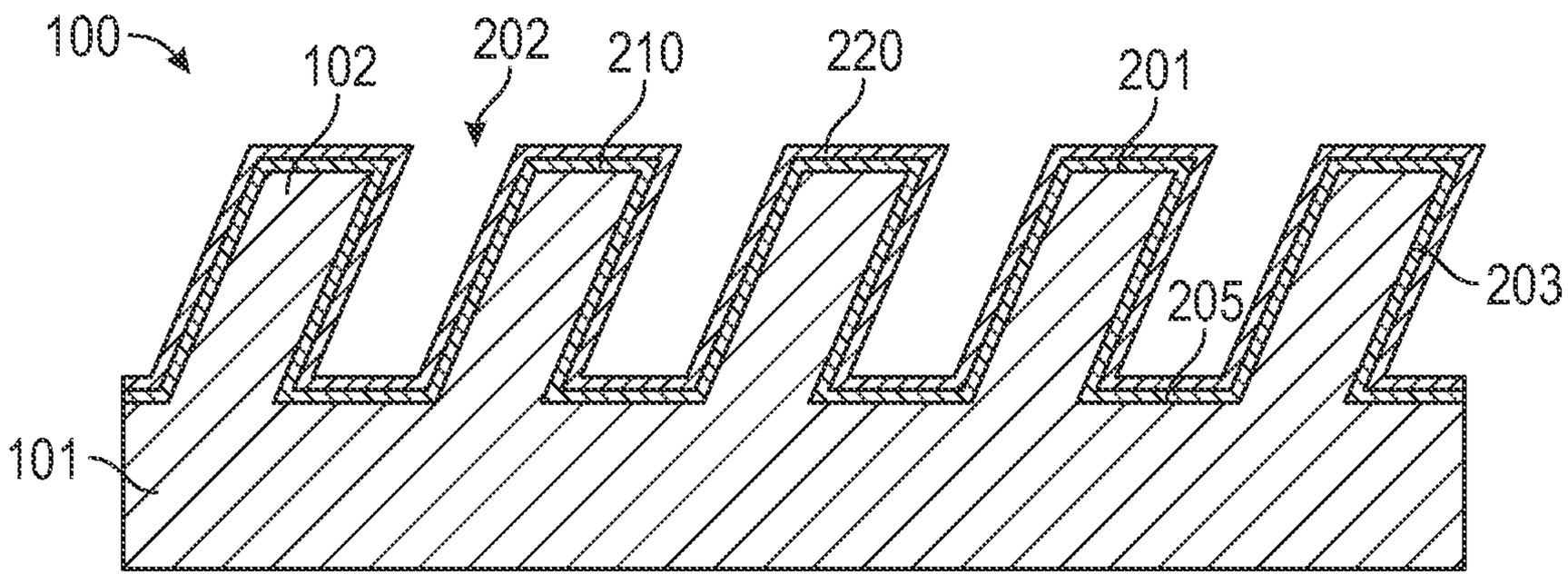
100
102
202
210
220
201
205
203
101

FIG. 2

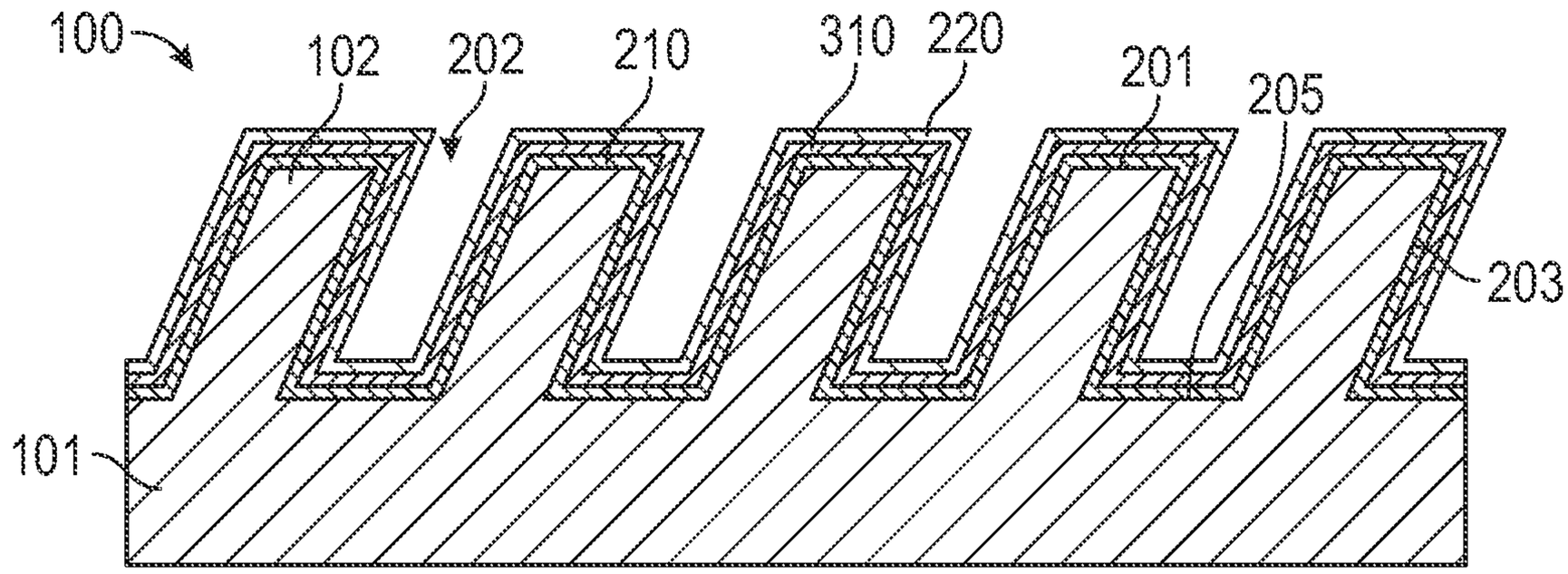
100
102
202
210
310
220
201
205
203
101

FIG. 3

100
102
310
220
201
202
205
203
101

FIG. 4

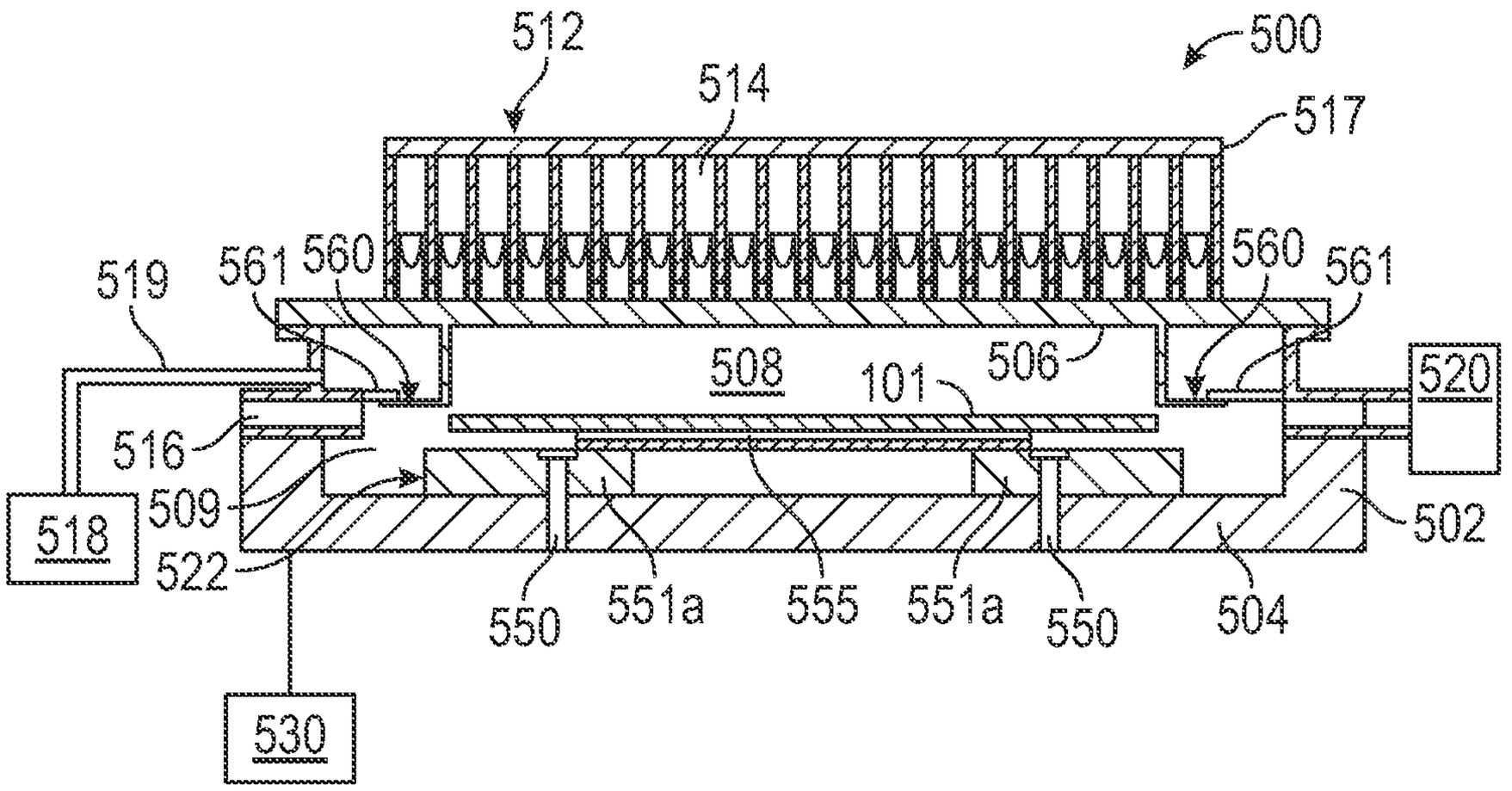
512
500
514
517
519
561
560
560
561
508
101
506
520
516
509
518
522
502
550
551a
555
551a
550
504
530

FIG. 5

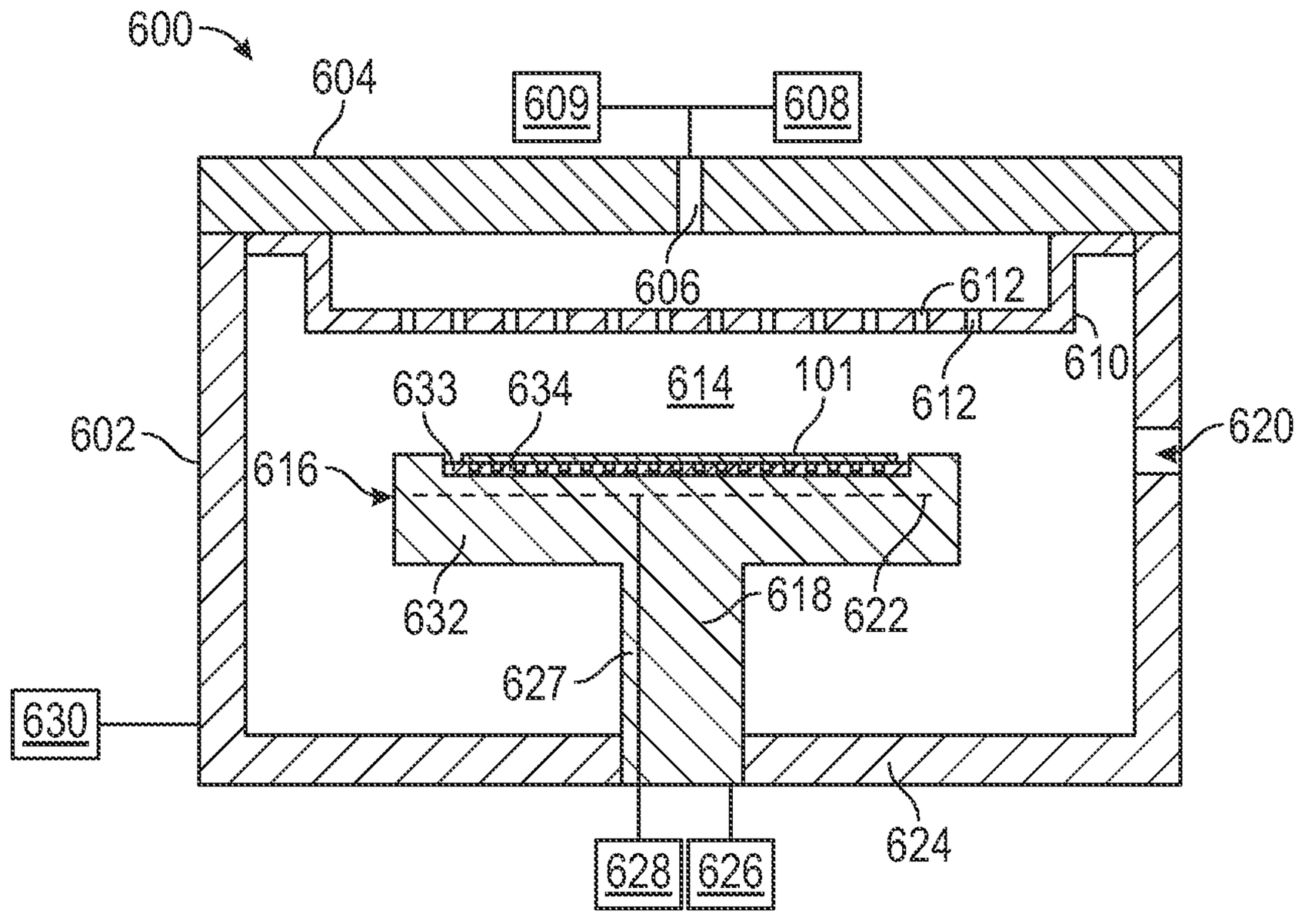
600
604
609
608
606
612
610
633
634
614
101
612
602
620
616
632
618
622
627
630
624
628
626

FIG. 6

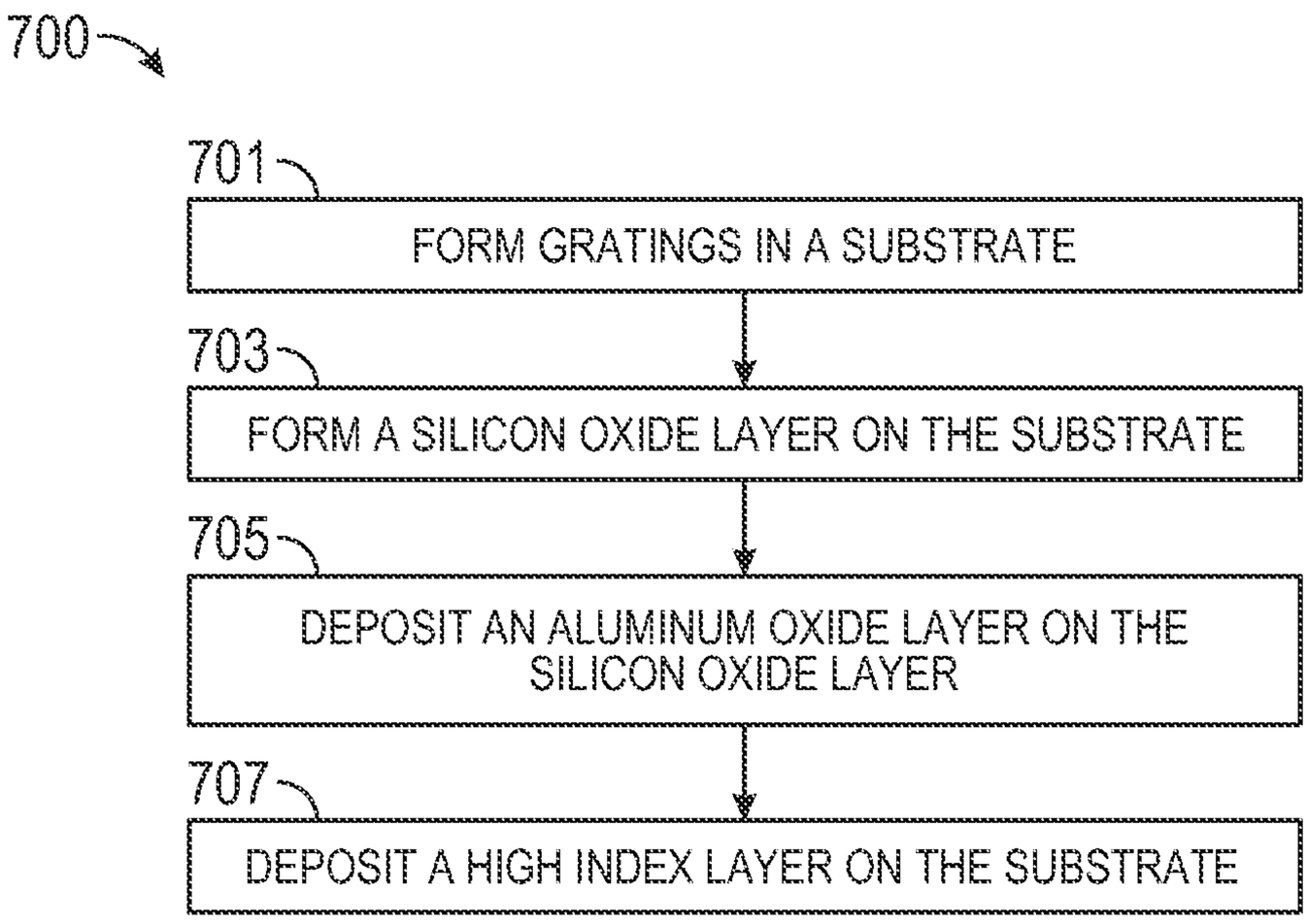
700
701
FORM GRATINGS IN A SUBSTRATE
703
FORM A SILICON OXIDE LAYER ON THE SUBSTRATE
705
DEPOSIT AN ALUMINUM OXIDE LAYER ON THE SILICON OXIDE LAYER
707
DEPOSIT A HIGH INDEX LAYER ON THE SUBSTRATE

FIG. 7

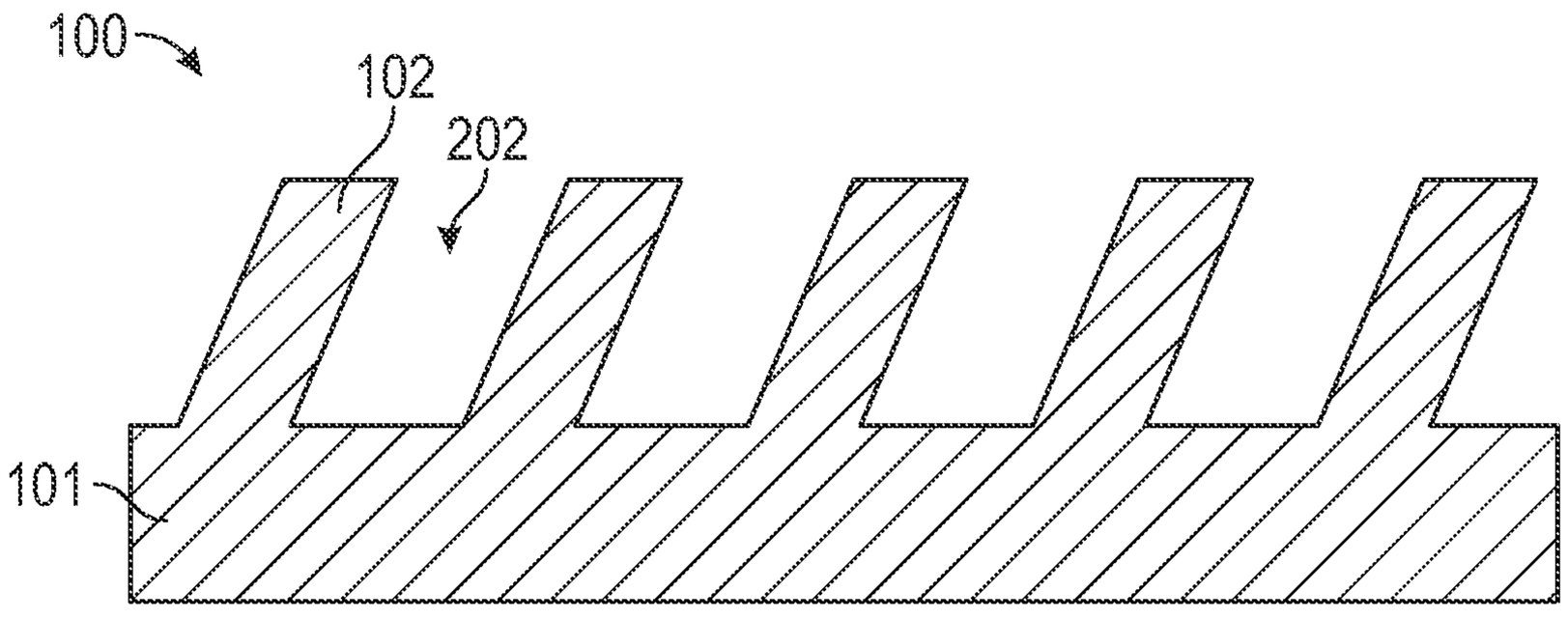
100
102
202
101

FIG. 8A

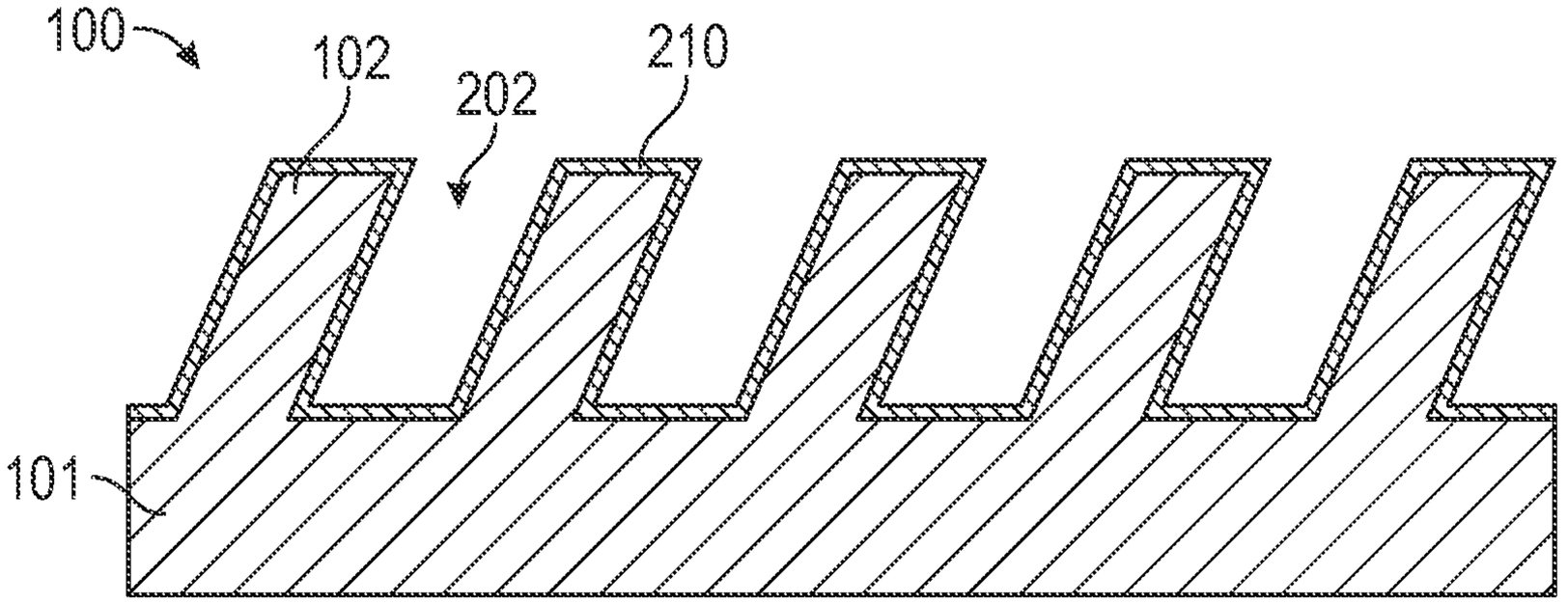

FIG. 8B

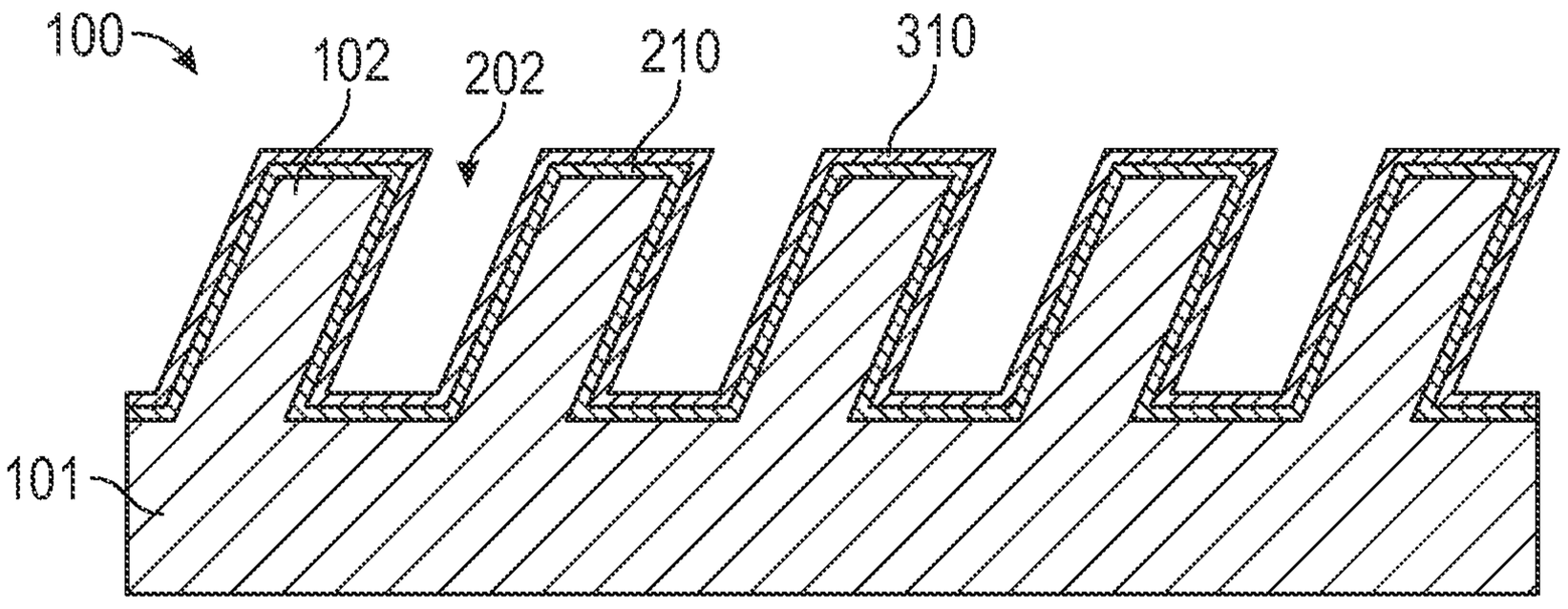

FIG. 8C

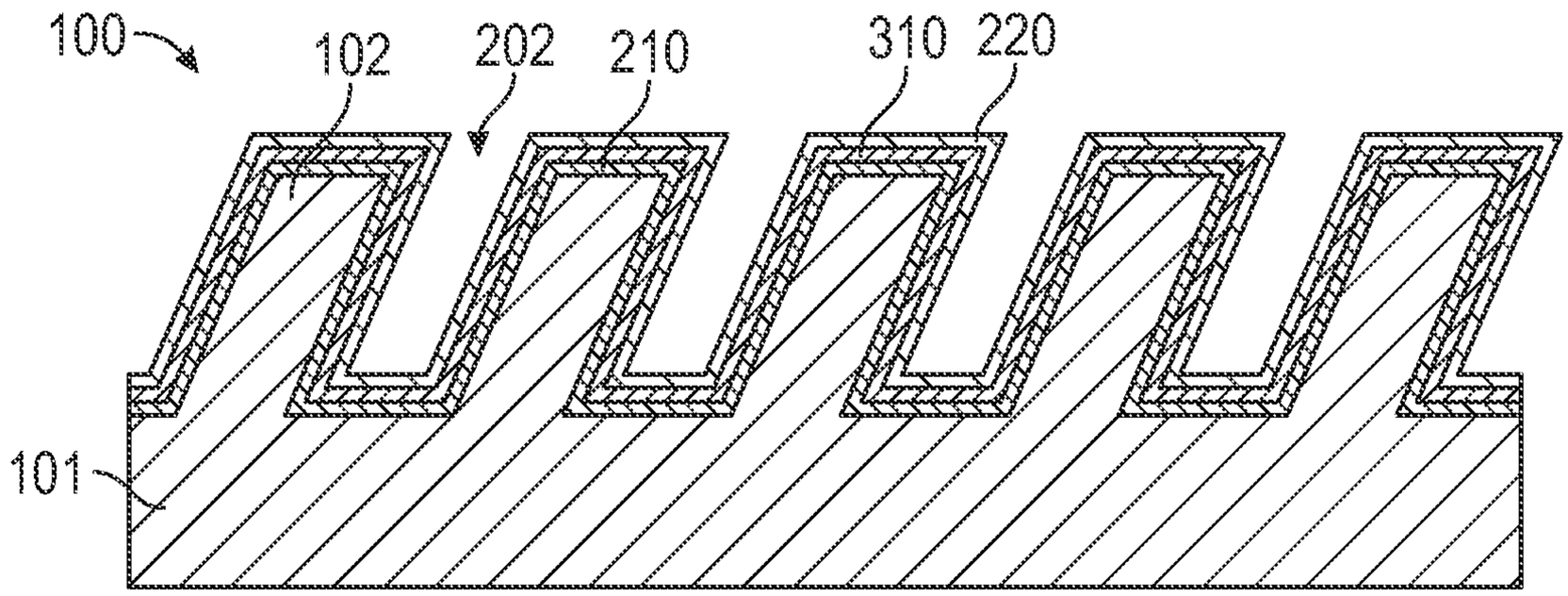
100
102
202
210
310
220
101

FIG. 8D

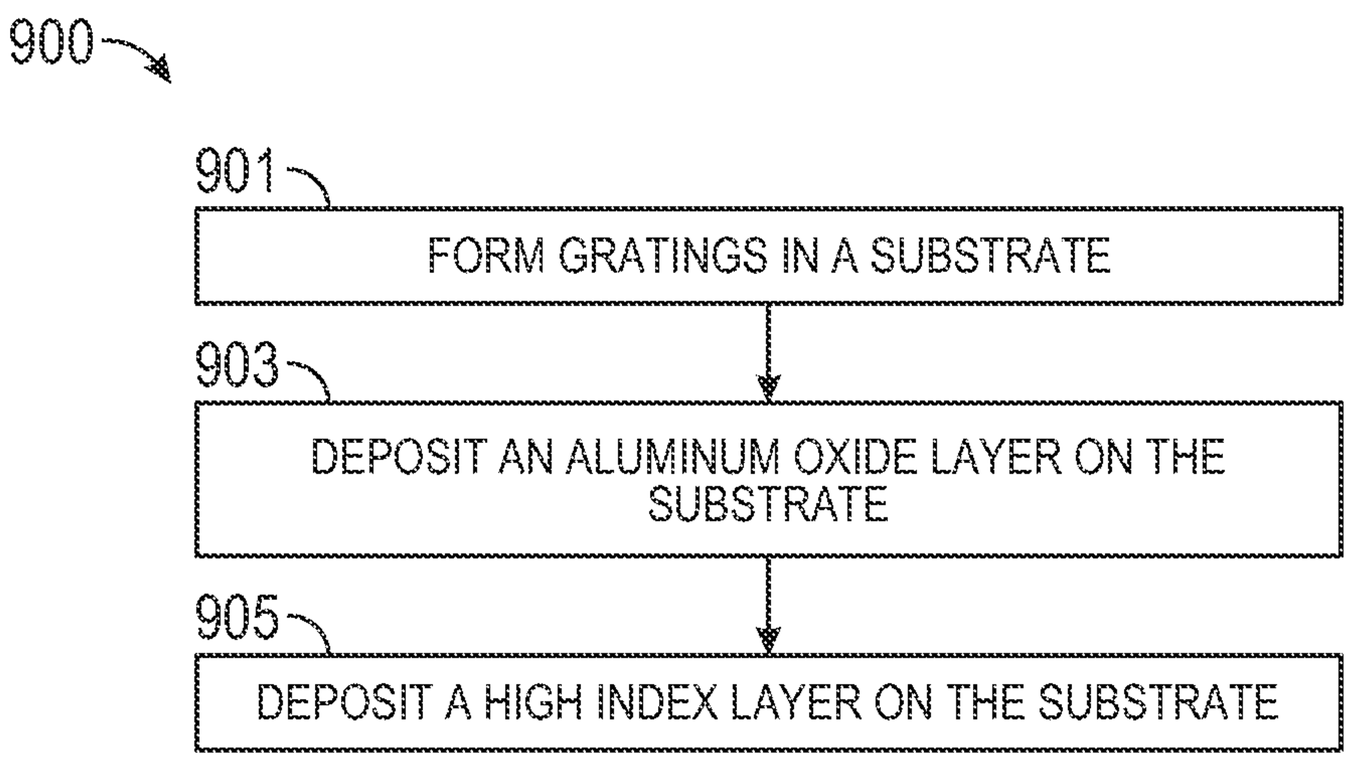
900
901
FORM GRATINGS IN A SUBSTRATE
903
DEPOSIT AN ALUMINUM OXIDE LAYER ON THE SUBSTRATE
905
DEPOSIT A HIGH INDEX LAYER ON THE SUBSTRATE

FIG. 9

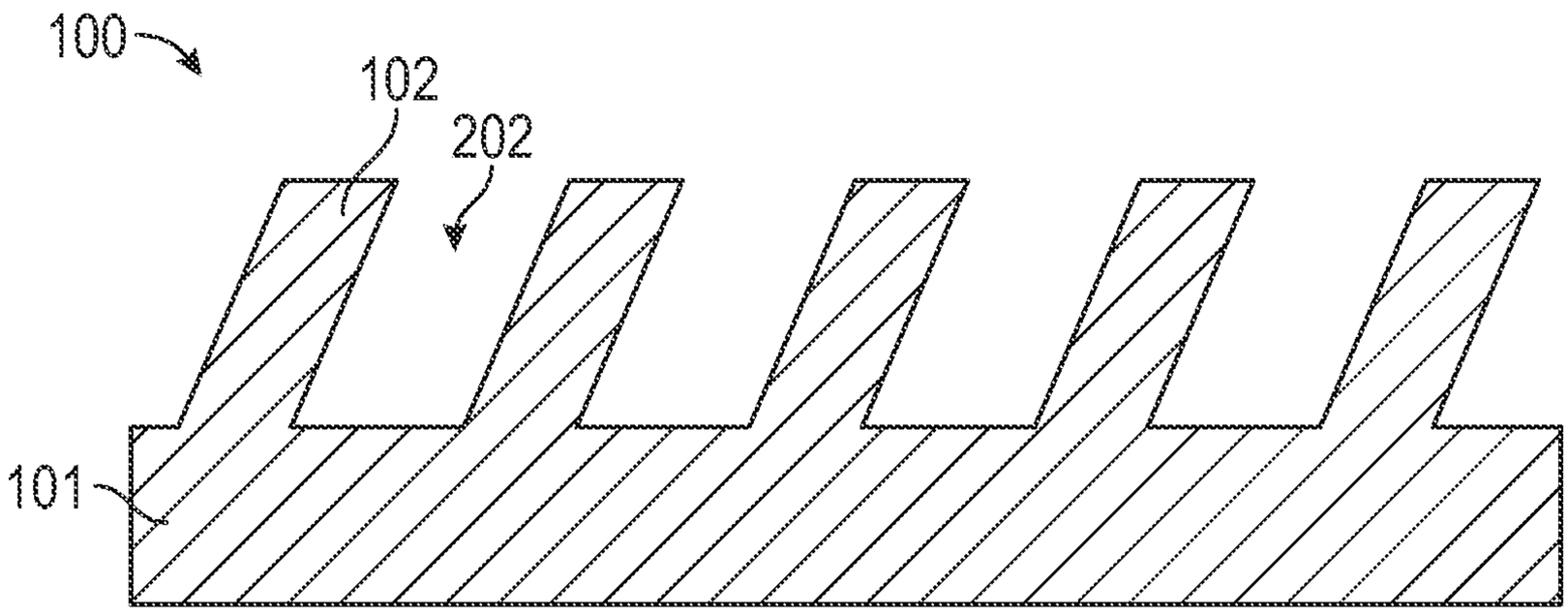

FIG. 10A

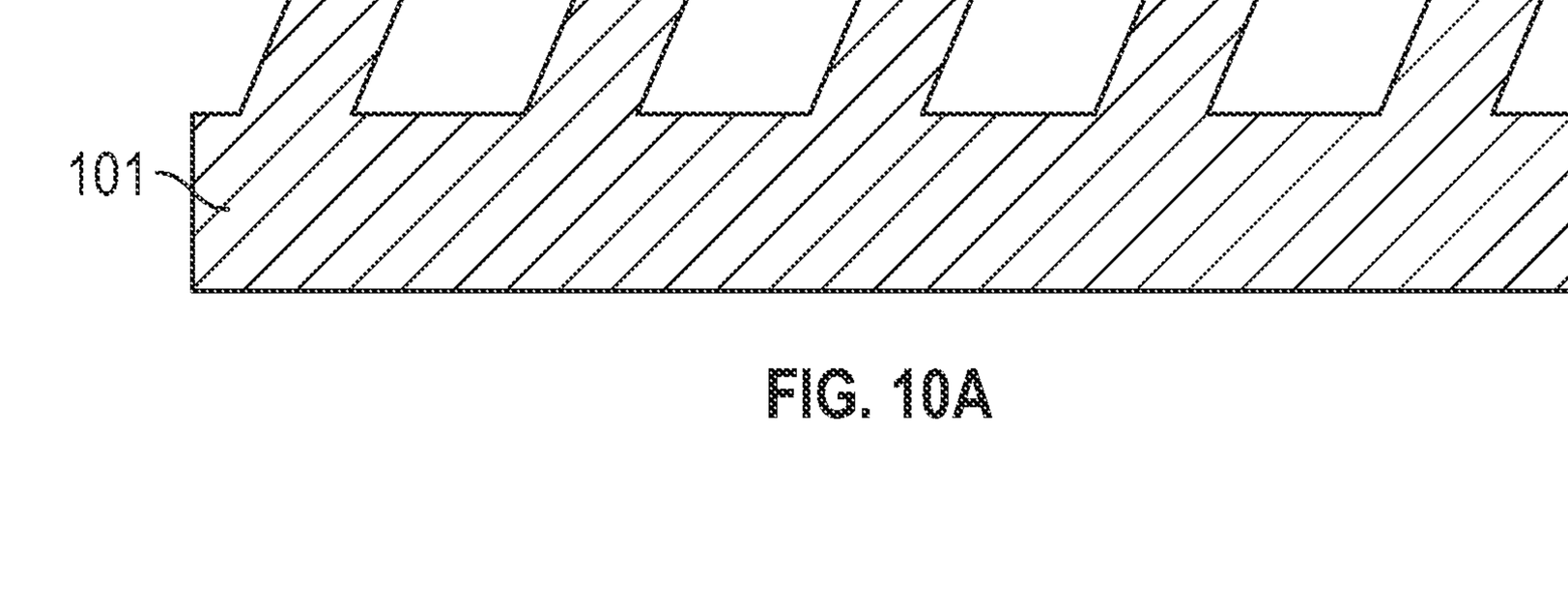

FIG. 10B

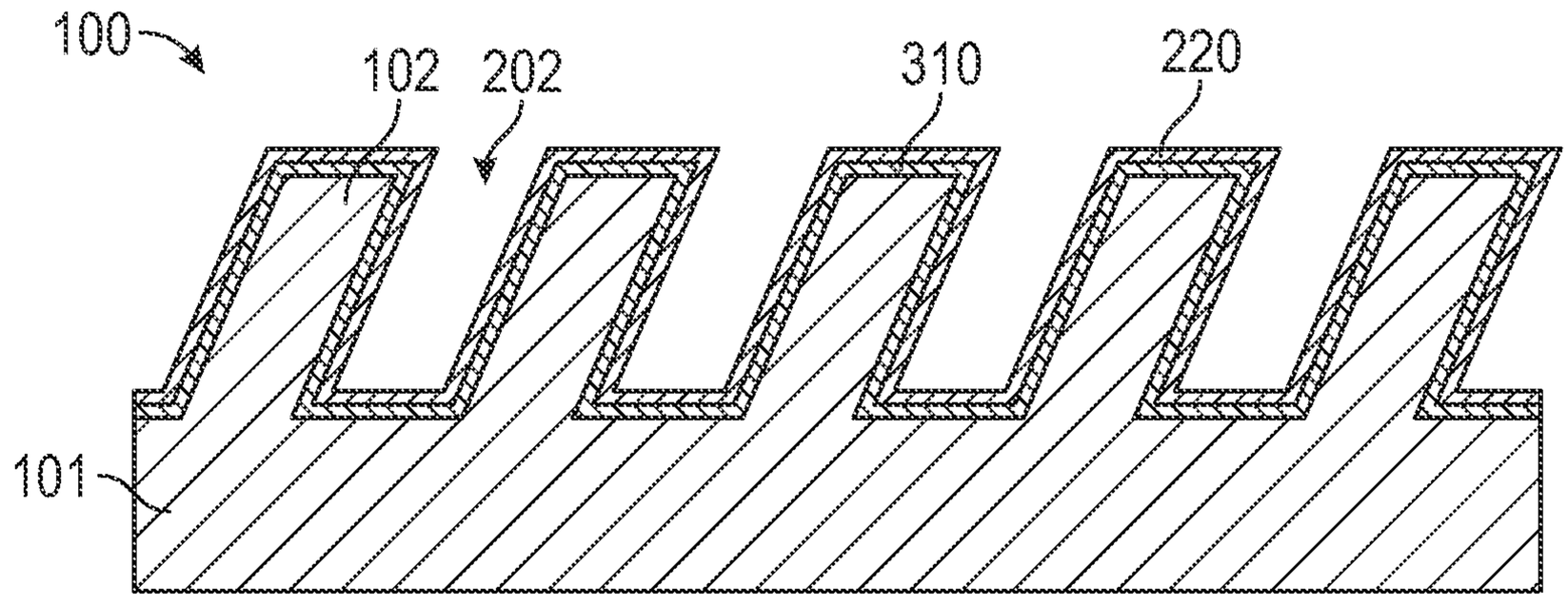

FIG. 10C

LOW REFRACTIVE INDEX MATERIALS ON THE GRATINGS TO IMPROVE THE WAVEGUIDE EFFICIENCY

CROSS-REFERENCE TO RELATED APPLICATIONS

[0001] This application claims priority to U.S. Provisional Patent Application Ser. No. 63/456,662, filed on Apr. 3, 2023, which is herein incorporated by reference.

BACKGROUND

Field

[0002] Embodiments of the present disclosure generally relate to waveguides. More specifically, embodiments described herein relate to improved waveguides with materials layers improving the optical properties of waveguides and methods of forming the same.

Description of the Related Art

[0003] Virtual reality is generally considered to be a computer generated simulated environment in which a user has an apparent physical presence. A virtual reality experience can be generated in 3D and viewed with a head-mounted display (HMD), such as glasses or other wearable display devices that have near-eye display panels as lenses to display a virtual reality environment that replaces an actual environment.

[0004] Augmented reality (AR), however, enables an experience in which a user can still see through the display lenses of the glasses or other HMD device to view the surrounding environment, yet also see images of virtual objects that are generated to appear as part of the environment. Augmented reality can include any type of input, such as audio and haptic inputs, as well as virtual images, graphics, and video that enhance or augment the environment that the user experiences. Optical devices, such as augmented reality waveguide combiners, are used for overlaying images for users. Generated light is propagated through the waveguide until the light exits the waveguide and is overlaid on the ambient environment for the user. Reduced efficiency at specific wavelengths of light of the waveguide diminish the user's experience due to reduced intensity of images output by the waveguide.

[0005] Accordingly, what is needed in the art are optical devices and methods forming waveguides that increase color efficiency at specific wavelengths.

SUMMARY

[0006] In one embodiment, a waveguide is provided. The waveguide including a substrate, a grating disposed in or on the substrate, the grating including a plurality of structures defined by a plurality of trenches, a layer of silicon oxide or aluminum oxide disposed over the structures on the substrate. The layer is disposed over sidewalls and top surfaces of the structures, and a bottom surface of the trenches. The waveguide further includes a high index layer disposed over the layer. The high index layer is disposed over the sidewalls and the top surfaces of the structures, and the bottom surface of the trenches with the layer disposed in between the structures and the high index layer.

[0007] In another embodiment, a method of forming a waveguide is provided. The method includes forming a grating in a substrate including a silicon-containing material, the gratings including a plurality of structures defined by a plurality of trenches, and forming a silicon oxide layer on the substrate, the silicon oxide layer is disposed over sidewalls and top surfaces of the structures, and a bottom surface of the trenches. The method further includes depositing a high index layer on the substrate. The high index layer is disposed over the sidewalls and the top surfaces of the structures, and the bottom surface of the trenches. The silicon oxide layer disposed in between the structures and the high index layer.

[0008] In another embodiment, a method of forming a waveguide is provided. The method includes forming a grating in a substrate, the gratings including a plurality of structures defined by a plurality of trenches, and forming an aluminum oxide layer on the substrate. The aluminum oxide layer is disposed over sidewalls and top surfaces of the structures, and a bottom surface of the trenches. The method further includes depositing a high index layer on the substrate. The high index layer is disposed over the sidewalls and the top surfaces of the structures, and the bottom surface of the trenches. The aluminum oxide layer disposed in between the structures and the high index layer

BRIEF DESCRIPTION OF THE DRAWINGS

[0009] So that the manner in which the above recited features of the present disclosure can be understood in detail, a more particular description of the disclosure, briefly summarized above, may be had by reference to embodiments, some of which are illustrated in the appended drawings. It is to be noted, however, that the appended drawings illustrate only exemplary embodiments and are therefore not to be considered limiting of its scope, may admit to other equally effective embodiments.

[0010] FIG. **1** is a perspective, frontal view of a waveguide, according to embodiments.

[0011] FIG. **2** is a cross-sectional view of a waveguide with a silicon oxide layer, according to embodiments.

[0012] FIG. **3** is a cross-sectional view of a waveguide with a silicon oxide layer and an aluminum oxide layer, according to embodiments.

[0013] FIG. **4** is a cross-sectional view of a waveguide with an aluminum oxide layer, according to embodiments.

[0014] FIG. **5** is a schematic, cross-sectional view of an anneal processing chamber, according to embodiments.

[0015] FIG. **6** is a schematic, side view of an atomic layer deposition processing chamber, according to embodiments.

[0016] FIG. **7** is a flow diagram describing a method of forming waveguides, according to embodiments.

[0017] FIG. **8**A-**8**D are cross-section views showing the operations of forming a waveguide, according to embodiments.

[0018] FIG. **9** is a flow diagram describing a method of forming waveguides, according to embodiments.

[0019] FIG. **10**A-**10**C are cross-section views showing the operations of forming a waveguide, according to embodiments.

[0020] To facilitate understanding, identical reference numerals have been used, where possible, to designate identical elements that are common to the figures. It is contemplated that elements and features of one embodiment may be beneficially incorporated in other embodiments without further recitation.

DETAILED DESCRIPTION

[0021] Embodiments of the present disclosure generally relate to waveguides. More specifically, embodiments described herein relate to improved waveguides with materials layers improving the optical properties of one or more surface regions of waveguides and methods of forming the same.

[0022] FIG. **1** is a perspective, frontal view of a waveguide **100**. It is to be understood that the waveguide **100** described herein is an exemplary waveguide and that other waveguides may be used with or modified to accomplish aspects of the present disclosure. The waveguide **100** includes a plurality of structures **102**. The structures **102** may be disposed over, under, or on a surface **103** of a substrate **101**, or disposed in the substrate **101**. The structures **102** are nanostructures have a sub-micron critical dimension, e.g., a width less than 1 micrometer. Regions of the structures **102** correspond to one or more gratings **104**. In one embodiment, which can be combined with other embodiments described herein, the waveguide **100** includes at least a first grating **104***a* corresponding to an input coupling grating and a third grating **104***c* corresponding to an output coupling grating. In another embodiment, which can be combined with other embodiments described herein, the waveguide **100** further includes a second grating **104***b*. The second grating **104***b* corresponds to a pupil expansion grating or a fold grating.

[0023] The waveguide **100** may be selected to transmit a suitable amount of light of a desired wavelength or wavelength range, such as one or more wavelengths from about 100 to about 3000 nanometers. Without limitation, in some embodiments, the waveguide **100** is configured such that the waveguide **100** transmits greater than or equal to about 50% to about 100% of an IR to UV region of the light spectrum. The waveguide **100** may be formed from any suitable material, provided that the waveguide **100** can adequately transmit light in a desired wavelength or wavelength range. Waveguide selection may include optical devices of any suitable material, including, but not limited to, amorphous dielectrics, non-amorphous dielectrics, crystalline dielectrics, silicon oxide, silicon carbide, polymers, or combinations thereof. In some embodiments, which can be combined with other embodiments described herein, the waveguide **100** includes a transparent material. Suitable examples may include an oxide, sulfide, phosphide, telluride or combinations thereof. In one example, the waveguide **100** includes silicon (Si), silicon dioxide (SiO_2), germanium (Ge), silicon germanium (SiGe), sapphire, glass, silicon carbide, or high-index transparent materials such as high-refractive-index glass (refractive index greater than 2.0).

[0024] FIG. **2** is a cross-sectional view of one of the gratings **104** of the waveguide **100** with a silicon oxide layer **210**, according to embodiments. The substrate **101** is a silicon-containing material. The structures **102** are spaced apart by trenches **202**. The structures **102** include a top surface **201**, and sidewalls **203**. The trenches **202** have a bottom surface **205**. As shown in FIG. **2**, the structures **102** are formed in the substrate **101** of the waveguide **100**. The silicon oxide layer **210** and a high index layer **220** (refractive index greater than 2.0) are disposed over the substrate **101**. The structures **102** may be binary or angled as shown in FIG. **2**. When the structures **102** are angled, the sidewalls **203** form an angle with the bottom surface **205**.

[0025] The silicon oxide layer **210** is disposed over the structures **102** covering the sidewalls **203** and the top surfaces **201**. The silicon oxide layer **210** covers the bottom surface **205** of the trenches **202**. The silicon oxide layer **210** has a thickness of 15 nanometers (nm) or less over each of the sidewalls **203** and the top surfaces **201** of the structures **102** and the bottom surface **205** of the trenches **202**. The silicon oxide layer **210** has a refractive index of about 1.5. The formation of the silicon oxide layer **210** is described herein in the method **700**.

[0026] The high index layer **220** is disposed over the silicon oxide layer **210**. The high index layer **220** covers the silicon oxide layer **210** across the structures **102**. The high index layer **220** has a thickness of less than or equal to 15 nm over each of the sidewalls **203** and the top surfaces **201** of the structures **102** and the bottom surface **205** of the trenches **202** with the silicon oxide layer **210** disposed in between the structures **102** and the high index layer **220**. The high index layer **220** includes titanium oxide or niobium oxide. The high index layer **220** has a refractive index greater than the refractive index of the silicon oxide layer **210**. The deposition of the high index layer **220** is described herein in the method **700**.

[0027] The silicon oxide layer **210** and the forming thereof substantially reduces the carbon content in the surface **103** of the substrate **101**. By reducing the carbon by a substantial amount, the optical performance of the waveguide **100** is improved. These substantially lower levels of carbon improves the optical performance of the waveguide **100** and cause substantially lower levels of optical loss when compared to other waveguides. The efficiency of light at a green wavelength from the waveguide **100** in particular is increased due to the addition of the silicon oxide layer **210**. The addition of the silicon oxide layer **210** changes the volume and refractive index of the structures **102**. The change of the volume and refractive index of the structures **102** modulates a diffractive efficiency of the structures **102**. The diffractive efficiency modulates the color efficiency to increase the efficiency of light at the green wavelength.

[0028] FIG. **3** is a cross-sectional view of the waveguide **100** with the silicon oxide layer **210** and an aluminum oxide layer **310**, according to embodiments. The substrate **101** includes a silicon-containing material. The waveguide **100** includes the structures **102** described above. The waveguide **100** includes the silicon oxide layer **210** and the high index layer **220**. The waveguide **100** further includes the aluminum oxide layer **310** disposed between the silicon oxide layer **210** and the high index layer **220**.

[0029] The silicon oxide layer **210** is disposed over the structures **102** covering the sidewalls **203** and the top surfaces **201**. The silicon oxide layer **210** covers the bottom surface **205** of the trenches **202**. The silicon oxide layer **210** has a thickness of 15 nanometers (nm) or less over each of the sidewalls **203** and the top surfaces **201** of the structures **102** and the bottom surface **205** of the trenches **202**. The silicon oxide layer **210** has a refractive index of about 1.5. The formation of the silicon oxide layer **210** is described herein in the method **700**.

[0030] The aluminum oxide layer **310** is disposed over the silicon oxide layer **210**. The aluminum oxide layer **310** covers the silicon oxide layer **210** across the structures **102**. The aluminum oxide layer **310** has a thickness of 15 nanometers (nm) or less over each of the sidewalls **203** and the top surfaces **201** of the structures **102** and the bottom surface **205** of the trenches **202** with the silicon oxide layer **210** disposed in between the structures **102** and the alumi-

num oxide layer **310**. The aluminum oxide layer **310** has a refractive index of about 1.7. The formation of the aluminum oxide layer **310** is described herein in the method **700**.

[0031] The high index layer **220** is disposed over the aluminum oxide layer **310**. The high index layer **220** covers the aluminum oxide layer **310** across the structures **102**. The high index layer **220** has a thickness of less than or equal to 15 nm over each of the sidewalls **203** and the top surfaces **201** of the structures **102** and the bottom surface **205** of the trenches **202** with the silicon oxide layer **210** and aluminum oxide layer **310** disposed in between the structures **102** and the high index layer **220**. The high index layer **220** includes titanium oxide or nioboium oxide. The high index layer **220** has a refractive index greater than the refractive index of the silicon oxide layer **210** and the aluminum oxide layer **310**. The deposition of the high index layer **220** is described herein in the method **700**.

[0032] The silicon oxide layer **210**, the aluminum oxide layer **310**, and the forming thereof substantially reduces the carbon content in the surface **103** of the substrate **101**. By reducing the carbon by a substantial amount, the optical performance of the waveguide **100** is improved. These substantially lower levels of carbon improves the optical performance of the waveguide **100** and cause substantially lower levels of optical loss when compared to other waveguides. The efficiency of light at a green wavelength from the waveguide **100** in particular is increased due to the addition of the silicon oxide layer **210** and the aluminum oxide layer **310**. The addition of the silicon oxide layer **210** and the aluminum oxide layer **310** changes the volume and refractive index of the structures **102**. The change of the volume and refractive index of the structures **102** modulates a diffractive efficiency of the structures **102**. The diffractive efficiency modulates the color efficiency to increase the efficiency of light at the green wavelength.

[0033] FIG. **4** is a cross-sectional view of the waveguide **100** with the aluminum oxide layer **310**, according to embodiments. The substrate **101** may include the materials listed above. The waveguide **100** includes the structures **102** described above. The waveguide **100** includes the aluminum oxide layer **310** and the high index layer **220**.

[0034] The aluminum oxide layer **310** is disposed over the structures **102** covering the sidewalls **203** and the top surfaces **201**. The aluminum oxide layer **310** has a thickness of 15 nanometers (nm) or less over each of the sidewalls **203** and the top surfaces **201** of the structures **102** and the bottom surface **205** of the trenches **202**. The aluminum oxide layer **310** has a refractive index of about 1.7. The formation of the aluminum oxide layer **310** is described herein in the method **900**. The high index layer **220** is disposed on the aluminum oxide layer **310**. The high index layer **220** has a refractive index greater than the refractive index of the aluminum oxide layer **310**.

[0035] The high index layer **220** is disposed over the aluminum oxide layer **310**. The high index layer **220** covers the aluminum oxide layer **310** across the structures **102**. The high index layer **220** has a thickness of less than or equal to 15 nm over each of the sidewalls **203** and the top surfaces **201** of the structures **102** and the bottom surface **205** of the trenches **202** with the aluminum oxide layer **310** disposed in between the structures **102** and the high index layer **220**. The high index layer **220** includes titanium oxide or niobium oxide. The high index layer **220** has a refractive index greater than the refractive index of the aluminum oxide layer **310**. The high index layer **220** has a refractive index greater than the refractive index of the aluminum oxide layer **310**. The deposition of the high index layer **220** is described herein in the method **900**.

[0036] The aluminum oxide layer **310** and the forming thereof substantially reduces the carbon content in the surface **103** of the substrate **101**. By reducing the carbon by a substantial amount, the optical performance of the waveguide **100** is improved. These substantially lower levels of carbon improves the optical performance of the waveguide **100** and cause substantially lower levels of optical loss when compared to other waveguides. The efficiency of light at a green wavelength from the waveguide **100** in particular is increased due to the addition of the aluminum oxide layer **310**. The addition of the aluminum oxide layer **310** changes the volume and refractive index of the structures **102**. The change of the volume and refractive index of the structures **102** modulates a diffractive efficiency of the structures **102**. The diffractive efficiency modulates the color efficiency to increase the efficiency of light at the green wavelength.

[0037] FIG. **5** is a schematic, cross-sectional views of an anneal processing chamber **500** according to embodiments of the disclosure. In some embodiments, the anneal processing chamber **500** is a Rapid Thermal Processing (RTP) chamber. In other embodiments, the anneal processing chamber **500** is any chamber applicable for use during a dry oxidation process. The anneal processing chamber **500** includes sidewalls **502**, a chamber bottom **504** coupled to the sidewalls **502**, and a window **506** disposed over the sidewalls **502**. In some embodiments, the window **506** is made of quartz. The sidewalls **502** and the chamber bottom **504** form a chamber body. The sidewalls **502**, the chamber bottom **504**, and the window **506** define an upper volume **508** for processing a substrate **101** therein and a lower volume **509**. The upper volume **508** is fluidly coupled to the lower volume **509**, and is generally delineated from the lower volume **509** by a plane defined by a lower or bottom edge of a radiation shield **560**.

[0038] A slit valve door **516** is formed through the sidewalls **502** for transferring a substrate **101** therethrough. The anneal processing chamber **500** is coupled to a gas source **518** by a conduit **519**. The gas source **518** is configured to provide one or more processing gases to the upper volume **508** during processing. In some embodiments, the process gas may be hydrogen, steam, oxygen, nitrogen, or combinations thereof. A vacuum pump **520** is coupled to the anneal processing chamber **500** for pumping out the upper volume **508**.

[0039] A substrate positioning assembly **522** is disposed in the lower volume **509** and configured to support, position, and/or rotate the substrate **101** during processing. The substrate positioning assembly **522** includes a substrate support **555**, which may be a contact support such as a pedestal, or a non-contact substrate supporting device using flows of fluid to support, position, and/or rotate the substrate **101**. The substrate positioning assembly **522** facilitates support of the substrate **101** on the substrate support **555**. The substrate positioning assembly **522** includes a plurality of lift pins **550** (two are shown) disposed in lift pin supports **551***a*. The lift pins **550** lifts the substrate **101** off the substrate support **555** to facilitate ingress san egress of the substrate **101** through the slit valve door **516**, as well as to facilitate transition of the substrate **101** from loading and processing positions.

[0040] A heating assembly **512** is disposed above the window **506** and configured to direct thermal energy towards the upper volume **508** through the window **506**. The heating assembly **512** includes a plurality of lamps **514**, such as high voltage tungsten halogen lamps disposed in a hexagonal pattern and controllable in zones to provide controlled heating to different zones of the upper volume **508**. Each of the plurality of lamps **514** is inserted into a heating assembly base **517** for electrical connection to a power supply (not shown).

[0041] In some embodiments, a radiation shield **560** is coupled to the sidewalls **502** of the anneal processing chamber **500** and secured thereto via one or more optional mounts **561**. The radiation shield **560** improves thermal processing due to improved temperature control and uniformity. The anneal processing chamber **500** described herein is provided as an example of a chamber to be used to process the waveguide **100**. The waveguide **100** can be processed, in various embodiments, with other types of processing chambers.

[0042] A controller **530** includes a central processing unit (CPU), a memory containing instructions, and support circuits for the CPU. The controller **530** controls various items directly, or via other computers and/or controllers. In one or more embodiments, the controller **530** is communicatively coupled to dedicated controllers, and the controller **530** functions as a central controller.

[0043] The controller **530** is of any form of a general-purpose computer processor that is used in an industrial setting for controlling various substrate processing chambers and equipment, and sub-processors thereon or therein. The memory, or non-transitory computer readable medium, is one or more of a readily available memory such as random access memory (RAM), dynamic random access memory (DRAM), static RAM (SRAM), and synchronous dynamic RAM (SDRAM (e.g., DDR1, DDR2, DDR3, DDR3L, LPDDR3, DDR4, LPDDR4, and the like)), read only memory (ROM), floppy disk, hard disk, flash drive, or any other form of digital storage, local or remote. The support circuits of the controller **530** are coupled to the CPU for supporting the CPU (a processor). The support circuits include cache, power supplies, clock circuits, input/output circuitry and subsystems, and the like. Operational parameters (such as a temperature of the substrate **101** and power applied to lamps **514**) are stored in the memory as a software routine that is executed or invoked to turn the controller **530** into a specific purpose controller to control the operations of the various chambers/modules described herein. The controller **530** is configured to conduct any of the operations described herein. The instructions stored on the memory, when executed, cause one or more of operations of method **700** (described below) to be conducted.

[0044] FIG. **6** illustrates a schematic view of an atomic layer deposition (ALD) process chamber **600**, according to embodiments. The ALD process chamber **600** includes a chamber body **602** and a lid **604** defining a process volume **614** therein. A bottom **624** of the chamber body **602** is opposite the lid **604**. A port **606** is formed through the lid **604**. A first gas source **608** is in fluid communication with the port **606**. A second gas source **609** is also in fluid communication with the port **606**. A showerhead **610** is coupled to the lid **604**. A plurality of openings **612** are formed through the showerhead **610**. The first gas source **608** and the second gas source **609** are in fluid communication with the process volume **614** via the port **606** and the openings **612**.

[0045] A substrate support **616** is moveably disposed in the process volume **614** opposite the lid **604**. The substrate support **616** includes a support body **632** disposed on a stem **618**. The support body **632** includes a support surface **634** disposed opposite the stem **618** and facing the showerhead **610**. In some embodiments, the support body **632** includes a heater or an electrostatic chuck. The support surface **634** includes a plurality of mesas **633**. An opening **620** is formed through the chamber body **602** between the lid **604** and the bottom **624**. During operation, a substrate **101** is loaded onto the support surface **634** through the opening **620**. An actuator **626** is coupled to the substrate support **616** to move the substrate support **616** toward and away from the showerhead **610** for loading and processing the substrate **101** thereon.

[0046] An RF mesh **622** is disposed within the support body **632**. One or more portions of the RF mesh **622** are disposed in a plane that is substantially perpendicular to the support surface **634**. In some embodiments, a heating element is disposed within the support body **632**. The heating element and RF mesh **622** may be used to heat the substrate **101** or electrostatically chuck the substrate **101**. The heating element may be disposed below the RF mesh **622** and may be substantially perpendicular to the support surface **634**. The RF mesh **622** is connected to one or more RF leads **627**. The RF leads **627** are coupled to an RF power source **628**. The RF power source **628** provides RF power to the RF mesh **622**.

[0047] The ALD process chamber **600** is used for ALD processes. ALD processes include at least two deposition steps and at least two purging steps. A deposition step will be followed by a purging step to remove unused deposition gases in the ALD process chamber **600**. During a first deposition step, a first gas is flowed through the first gas source **608** and a second gas is flowed through the second gas source **609**. The first gas is a first precursor gas. In some embodiments, the first precursor gas is trimethylaluminium (TMA) gas. Different precursor gases may be used for different deposition steps. During the first deposition step, the second gas may be a purge gas. The purge gas may include argon gas. The purge gas may be used as a carrier gas to assist in flowing the one or more process gases over surfaces of the waveguide **100**. During a first purge step, the purge gas is flowed from both gas sources to remove unused precursor gases. A second deposition step is performed after the first purge step. The second deposition step may include a second precursor gas flowed from the first gas source **608**. In some embodiments, the second precursor gas is at least one of hydrogen, steam, oxygen, or nitrogen. The second gas is again flowed through the second gas source **609**. After the second deposition step, a second purge step is performed. The ALD processing chamber **600** described herein is provided as an example of a chamber to be used to process the waveguide **100**. The waveguide **100** can be implemented, in various embodiments, with other types of processing chambers.

[0048] A controller **630** such as the controller **530** described above is included in the Operational parameters (such as the flow of process gases, movement of the substrate support **616**, and power applied to substrate support **616** to heat or chuck the substrate **101**) are stored in the memory as a software routine that is executed or invoked to

turn the controller **630** into a specific purpose controller to control the operations of the various chambers/modules described herein. The controller **630** is configured to conduct any of the operations described herein. The instructions stored on the memory, when executed, cause one or more of operations of method **700** and **900** (described below) to be conducted.

[0049] FIG. **7** is a flow diagram describing a method **700** of forming the waveguides **100**, according to embodiments. FIG. **8**A-**8**D are cross-section views showing the operations of forming the waveguide **100**, according to embodiments. At operation **701**, gratings **104** are formed in the substrate **101**. The gratings are formed from structures **102**. The structures **102** are formed by removing material in the substrate **101** forming the trenches **202** between the structures **102**. The structures **102** are described above in FIG. **2**. FIG. **8**A illustrates the structures **102** formed in the substrate **101**.

[0050] At operation **703**, the silicon oxide layer **210** is formed on the structures **102**. The silicon oxide layer **210** is formed during a dry oxidation process. Before the dry oxidation process, the substrate **101** is annealed. In some embodiments, the annealing process is performed in the anneal processing chamber **500**. The annealing consists of the substrate **101** being exposed to a temperature set point. The plurality of lamps **514** are activated to heat the upper volume **508** to the temperature set point. Processing gases (e.g., hydrogen, steam, oxygen, and nitrogen) may be flowed over the substrate **101** via the gas source **518**. Processing gases are exhausted through the vacuum pump **520**. In some embodiments, an inert gas (e.g., argon) can be used as a carrier gas to assist in flowing the one or more process gases over surfaces of the substrate **101**. In some embodiments, the temperature set point is a temperature from about 600° C. to about 2000° C., such as from about 900° C. to about 1400° C. The temperature during annealing can be maintained within a specified threshold (0.5 degrees ° C.) of the temperature set point. The duration of the annealing can be from about one minute to about three hours, such as from about five minutes to about one hour, such as about ten minutes. During the annealing, the pressure can be maintained at a pressure from about 250 Torr to about 1000 Torr, such as from about 300 Torr to about 760 Torr, such as about 400 Torr to about 500 Torr. In some embodiments, the annealing is performed in a different processing chamber.

[0051] After the annealing, the substrate **101** is subject to the dry oxidation process. In some embodiments, the dry oxidation process is performed in the anneal processing chamber **500**. The dry oxidation process uses oxygen gas as the process gas. In some embodiments, the purge gas (e.g., argon) can be used as a carrier gas to assist in flowing the oxygen gas over surfaces of the substrate **101**. The plurality of lamps **514** are activated to heat the upper volume **508** to a process temperature. The dry oxidation process is done at a temperature from about 600° C. to about 2000° C., such as from about 900° C. to about 1400° C., such as 1000° C. The oxygen gas is flowed from the gas source **518** to the upper volume **508** via the conduit **519**. The oxygen flows over the substrate **101**. The oxygen gas is heated in the upper volume **508**. The heated oxygen gas interacts with the substrate **101** forming a silicon oxide layer **210**. During the dry oxidation process, the pressure can be maintained at a pressure from about 250 Torr to about 1000 Torr, such as from about 300 Torr to about 850 Torr, such as about 760 Torr, which is atmospheric pressure. The dry oxidation process can be from about one minute to about three hours, such as from about five minutes to about one hour, such as about 8.5 minutes. The process conditions (pressure, flow rate of oxygen, timing) are selected to have the proper thickness of the silicon oxide layer **210**. In some embodiments, the dry oxidation process is performed in a different processing chamber.

[0052] The annealing and dry oxidation processes create the silicon oxide layer **210** on the structures **102**. FIG. **8**B illustrates the silicon oxide layer **210** formed on the structures **102**.

[0053] The annealing and dry oxidation processes create the silicon oxide layer **210** on the structures **102**. In some embodiments, the annealing and dry oxidation processes can substantially reduce the carbon content in the surface **103** of the substrate **101** and the top surface **201** and sidewalls **203** of the structures **102** by at least 50%, such as by at least 80% (e.g., 5/6 of the carbon being removed), such as by at least 90%, such as by at least 99%. By reducing the carbon by a substantial amount, the optical performance of the waveguide **100** is improved. These substantially lower levels of carbon improves the optical performance of the waveguide **100** and cause substantially lower levels of optical loss when compared to the other waveguides. The efficiency of light at a green wavelength from the waveguide **100** in particular is increased due to the addition of the silicon oxide layer **210**. The addition of the silicon oxide layer **210** changes the volume and refractive index of the structures **102**. The change of the volume and refractive index of the structures **102** modulates a diffractive efficiency of the structures **102**. The diffractive efficiency modulates the color efficiency to increase the efficiency of light at the green wavelength.

[0054] At optional operation **705**, the aluminum oxide layer **310** is deposited on the silicon oxide layer **210**. The aluminum oxide layer **310** is deposited using ALD. Prior to depositing the aluminum oxide layer **310**, the substrate **101** is first annealed. In some embodiments, the annealing process is performed in the anneal processing chamber **500**. The annealing consists of the substrate **101** being exposed to a temperature set point. The plurality of lamps **514** are activated to heat the upper volume **508** to the temperature set point. Processing gases (e.g., hydrogen, steam, oxygen, and nitrogen) may be flowed over the substrate **101** via the gas source **518**. Processing gases are exhausted through the vacuum pump **520**. In some embodiments, an inert gas (e.g., argon) can be used as a carrier gas to assist in flowing the one or more process gases over surfaces of the substrate **101**. In some embodiments, the temperature set point is a temperature from about 600° C. to about 2000° C., such as from about 900° C. to about 1400° C. The temperature during annealing can be maintained within a specified threshold (0.5 degrees ° C.) of the temperature set point. The duration of the annealing can be from about one minute to about three hours, such as from about five minutes to about one hour, such as about ten minutes. During the annealing, the pressure can be maintained at a pressure from about 250 Torr to about 1000 Torr, such as from about 300 Torr to about 760 Torr, such as about 400 Torr to about 500 Torr. In some embodiments, the annealing is performed in a different processing chamber.

[0055] After the annealing, the substrate **101** is subject to an atomic layer deposition (ALD) process. In some embodiments, the annealing process is performed in the ALD

processing chamber **600**. The substrate **101** is positioned on the substrate support **616**. The substrate **101** may be electrostatically chucked using the RF mesh **622**. The substrate **101** may be heated using the heater disposed in the substrate support **616**. The ALD process uses trimethylaluminium (TMA) gas as the first process gas and water (steam) as the second process gas. In some embodiments, the purge gas (e.g., argon) can be used as a carrier gas to assist in flowing the TMA gas and steam over surfaces of the substrate **101**. The TMA gas is flowed into the process volume **614**. The TMA gas reacts with the silicon oxide layer **210** on the substrate **101**. The process volume **614** is purged with the purge gas. The steam is flowed into the process volume **614**. The steam reacts with a layer formed on the silicon oxide layer **210** with the TMA gas. This reaction forms the aluminum oxide layer **310**. The process volume **614** is purged with the purge gas again.

[0056] The ALD process is done at a temperature from about 200° C. to about 700° C., such as from about 250° C. to about 350° C., such as 300° C. During the ALD process, the pressure can be maintained at a pressure from about 250 Torr to about 1000 Torr, such as from about 300 Torr to about 850 Torr, such as about 760 Torr, which is atmospheric pressure. In some embodiments, the ALD process can be from about one minute to about three hours, such as from about five minutes to about one hour, such as about 8.5 minutes. The cycle time of the ALD process is 120 cycles. The pulse time of the TMA gas is 0.3 s. The pulse time of the steam is 0.2 s. The process time, cycles, pulse time of the TMA and the pulse time of the steam are selected to have the proper thickness of the aluminum oxide layer **310**. In some embodiments, the ALD process is performed in a different processing chamber. FIG. **8**C illustrates the aluminum oxide layer **310** deposited on the silicon oxide layer **210**.

[0057] The annealing and ALD processes create the aluminum oxide layer **310** on the structures **102**. The aluminum oxide layer and the forming thereof improves the optical performance of the waveguide **100**. The waveguide **100** has substantially lower levels of optical loss when compared to other waveguides. The efficiency of light at a green wavelength from the waveguide **100** in particular is increased due to the addition of the aluminum oxide layer **310**. The addition of the aluminum oxide layer **310** changes the volume and refractive index of the structures **102**. The change of the volume and refractive index of the structures **102** modulates a diffractive efficiency of the structures **102**. The diffractive efficiency modulates the color efficiency to increase the efficiency of light at the green wavelength.

[0058] At operation **707**, the high index layer **220** is deposited on the substrate **101**. In embodiments where the aluminum oxide layer **310** is included, the high index layer **220** is deposited on the aluminum oxide layer **310**. In embodiments where the aluminum oxide layer is not included, the high index layer **220** is deposited on the silicon oxide layer **210**. In some embodiments, the high index layer **220** may be deposited using an ALD process such as the ALD process used to deposit the aluminum oxide layer **310**. FIG. **8**D illustrates the high index layer **220** is deposited on the aluminum oxide layer **310**.

[0059] FIG. **9** is a flow diagram describing a method **900** of forming the waveguides **100**, according to embodiments. FIG. **10**A-**10**C are cross-section views showing the operations of forming the waveguide **100**, according to embodiments. At operation **901**, gratings **104** are formed in the substrate **101**. The gratings are formed from structures **102**. The structures **102** are formed by removing material in the substrate **101** forming the trenches **202** between the structures **102**. The structures **102** are described above in FIG. **2**. FIG. **10**A illustrates the structures **102** formed in the substrate **101**.

[0060] At operation **903**, the aluminum oxide layer **310** is deposited on the structures **102**. The aluminum oxide layer **310** is deposited using ALD. Prior to depositing the aluminum oxide layer **310**, the substrate **101** is first annealed. In some embodiments, the annealing process is performed in the anneal processing chamber **500**. The annealing consists of the substrate **101** being exposed to a temperature set point. The plurality of lamps **514** are activated to heat the upper volume **508** to the temperature set point. Processing gases (e.g., hydrogen, steam, oxygen, and nitrogen) may be flowed over the substrate **101** via the gas source **518**. Processing gases are exhausted through the vacuum pump **520**. In some embodiments, an inert gas (e.g., argon) can be used as a carrier gas to assist in flowing the one or more process gases over surfaces of the substrate **101**. In some embodiments, the temperature set point is a temperature from about 600° C. to about 2000° C., such as from about 900° C. to about 1400° C. The temperature during annealing can be maintained within a specified threshold (0.5 degrees °C) of the temperature set point. The duration of the annealing can be from about one minute to about three hours, such as from about five minutes to about one hour, such as about ten minutes. During the annealing, the pressure can be maintained at a pressure from about 250 Torr to about 1000 Torr, such as from about 300 Torr to about 760 Torr, such as about 400 Torr to about 500 Torr. In some embodiments, the annealing is performed in a different processing chamber.

[0061] After the annealing, the substrate **101** is subject to an atomic layer deposition (ALD) process. In some embodiments, the annealing process is performed in the ALD processing chamber **600**. The substrate **101** is positioned on the substrate support **616**. The substrate **101** may be electrostatically chucked using the RF mesh **622**. The substrate **101** may be heated using the heater disposed in the substrate support **616**. The ALD process uses trimethylaluminium (TMA) gas as the first process gas and water (steam) as the second process gas. In some embodiments, the purge gas (e.g., argon) can be used as a carrier gas to assist in flowing the TMA gas and steam over surface **103** of the substrate **101**. The TMA gas is flowed into the process volume **614**. The TMA gas reacts with the surface **103** of the substrate **101**. The process volume **614** is purged with the purge gas. The steam is flowed into the process volume **614**. The steam reacts with a layer formed on the surface **103** of the substrate **101** with the TMA gas. This reaction forms the aluminum oxide layer **310**. The process volume **614** is purged with the purge gas again.

[0062] The ALD process is done at a temperature from about 200° C. to about 700° C., such as from about 250° C. to about 350° C., such as 300° C. During the ALD process, the pressure can be maintained at a pressure from about 250 Torr to about 1000 Torr, such as from about 300 Torr to about 850 Torr, such as about 760 Torr, which is atmospheric pressure. In some embodiments, the ALD process can be from about one minute to about three hours, such as from about five minutes to about one hour, such as about 8.5 minutes. The cycle time of the ALD process is 120 cycles. The pulse time of the TMA gas is 0.3 s. The pulse time of

the steam is 0.2 s. The process time, cycles, pulse time of the TMA and the pulse time of the steam are selected to have the proper thickness of the aluminum oxide layer **310**. In some embodiments, the ALD process is performed in a different processing chamber. FIG. **10**B illustrates the aluminum oxide layer **310** deposited on the silicon oxide layer **210**.

[0063] The annealing and ALD processes create the aluminum oxide layer **310** on the structures **102**. In some embodiments, the annealing and ALD processes can substantially reduce the carbon content in the surface **103** of the substrate **101** and the top surface **201** and sidewalls **203** of the structures **102** by at least 50%, such as by at least 80% (e.g., 5/6 of the carbon being removed), such as by at least 90%, such as by at least 99%. By reducing the carbon by a substantial amount, the optical performance of the waveguide **100** is improved. These substantially lower levels of carbon improves the optical performance of the waveguide **100** and cause substantially lower levels of optical loss when compared to other waveguides The efficiency of light at a green wavelength from the waveguide **100** in particular is increased due to the addition of the aluminum oxide layer **310**. The addition of the aluminum oxide layer **310** changes the volume and refractive index of the structures **102**. The change of the volume and refractive index of the structures **102** modulates a diffractive efficiency of the structures **102**. The diffractive efficiency modulates the color efficiency to increase the efficiency of light at the green wavelength.

[0064] At operation **905**, the high index layer **220** is deposited on the on the aluminum oxide layer **310**. In some embodiments, the high index layer **220** may be deposited using an ALD process such as the ALD process used to deposit the aluminum oxide layer **310**. FIG. **10**C illustrates the high index layer **220** is deposited on the aluminum oxide layer **310**.

[0065] In summation, embodiments of the present disclosure generally relate to waveguides. More specifically, embodiments described herein relate to improved waveguides with materials layers improving the optical properties of one or more surface regions of waveguides and methods of forming the same. The disclosure allows for the efficiency of light at a green wavelength from the waveguide **100** to be increased. The addition of the silicon oxide layer **210** or the aluminum oxide layer **310** reduce the optical loss at the green wavelength through material properties. Also, the addition of the silicon oxide layer **210** and/or the aluminum oxide layer **310** change the volume and refractive index of the structures **102**. The change of the volume and refractive index of the structures **102** modulates a diffractive efficiency of the structures **102**. The diffractive efficiency modulates the color efficiency to increase the efficiency of light at the green wavelength.

[0066] While the foregoing is directed to embodiments of the present disclosure, other and further embodiments of the disclosure may be devised without departing from the basic scope thereof, and the scope thereof is determined by the claims that follow.

What is claimed is:

1. A waveguide, comprising:

a substrate;

a grating disposed in or on the substrate, the grating comprising a plurality of structures defined by a plurality of trenches;

a layer of silicon oxide or aluminum oxide disposed over the structures on the substrate, the layer disposed over sidewalls and top surfaces of the structures, and a bottom surface of the trenches; and

a high index layer disposed over the layer, the high index layer disposed over the sidewalls and the top surfaces of the structures, and the bottom surface of the trenches with the layer disposed in between the structures and the high index layer.

2. The waveguide of claim **1**, wherein the layer is a silicon oxide layer and the high index layer is disposed on the silicon oxide layer.

3. The waveguide of claim **2**, wherein an aluminum oxide layer is disposed between the silicon oxide layer and the high index layer.

4. The waveguide of claim **2**, wherein the silicon oxide layer has a thickness of less than or equal to 15 nm.

5. The waveguide of claim **1**, wherein the substrate comprises a silicon-containing material.

6. The waveguide of claim **1**, wherein the layer is an aluminum oxide layer and the high index layer is disposed on the aluminum oxide layer.

7. The waveguide of claim **6**, wherein the aluminum oxide layer has a thickness of less than or equal to 15 nm.

8. The waveguide of claim **6**, wherein the high index layer includes titanium oxide or niobium oxide.

9. The waveguide of claim **1**, wherein the substrate comprises silicon, silicon dioxide, germanium, silicon germanium, sapphire, glass, or silicon carbide.

10. A method of forming a waveguide, comprising:

forming a grating in a substrate comprising a silicon-containing material, the gratings comprising a plurality of structures defined by a plurality of trenches;

forming a silicon oxide layer on the substrate, the silicon oxide layer disposed over sidewalls and top surfaces of the structures, and a bottom surface of the trenches; and

depositing a high index layer on the substrate, the high index layer disposed over the sidewalls and the top surfaces of the structures, and the bottom surface of the trenches with the silicon oxide layer disposed in between the structures and the high index layer.

11. The method of claim **10**, wherein the silicon oxide layer is formed with a dry oxidation process, the dry oxidation process using oxygen as a process gas.

12. The method of claim **11**, wherein the dry oxidation process is performed at a temperature of about 900° C. to about 1400° C.

13. The method of claim **10**, further comprising depositing an aluminum oxide layer prior to the high index layer, the aluminum oxide layer disposed between the silicon oxide layer and the high index layer.

14. The method of claim **13**, wherein the aluminum oxide layer is deposited using an atomic layer deposition process.

15. The method of claim **14**, wherein the atomic layer deposition process uses trimethylaluminium gas and steam as process gases.

16. A method of forming a waveguide, comprising:

forming a grating in a substrate, the gratings comprising a plurality of structures defined by a plurality of trenches;

forming an aluminum oxide layer on the substrate, the aluminum oxide layer disposed over sidewalls and top surfaces of the structures, and a bottom surface of the trenches; and

depositing a high index layer on the substrate, the high index layer over the sidewalls and the top surfaces of

the structures, and the bottom surface of the trenches with the aluminum oxide layer disposed in between the structures and the high index layer.

17. The method of claim **16**, wherein the aluminum oxide layer is deposited using an atomic layer deposition process.

18. The method of claim **17**, wherein the atomic layer deposition process uses trimethylaluminium gas and steam as process gases.

19. The method of claim **17**, wherein the atomic layer deposition process is performed at a temperature of about 250° C. to about 350° C.

20. The method of claim **17**, wherein a cycle time of the atomic layer deposition process is 120 cycles.

* * * * *