US009528185B2

(12) **United States Patent**
Nam et al.

(10) **Patent No.: US 9,528,185 B2**
(45) **Date of Patent: Dec. 27, 2016**

(54) **PLASMA UNIFORMITY CONTROL BY ARRAYS OF UNIT CELL PLASMAS**

(71) Applicant: **Applied Materials, Inc.**, Santa Clara, CA (US)

(72) Inventors: **Sang Ki Nam**, Danville, CA (US); **Tae Seung Cho**, San Jose, CA (US); **Ludovic Godet**, Sunnyvale, CA (US); **Srinivas D. Nemani**, Sunnyvale, CA (US)

(73) Assignee: **APPLIED MATERIALS, INC.**, Santa Clara, CA (US)

(*) Notice: Subject to any disclaimer, the term of this patent is extended or adjusted under 35 U.S.C. 154(b) by 0 days.

(21) Appl. No.: **14/489,398**

(22) Filed: **Sep. 17, 2014**

(65) **Prior Publication Data**

US 2016/0053376 A1 Feb. 25, 2016

Related U.S. Application Data

(60) Provisional application No. 62/040,901, filed on Aug. 22, 2014.

(51) **Int. Cl.**

H01L 21/00	(2006.01)
C23C 16/00	(2006.01)
C23C 16/455	(2006.01)
H01J 37/32	(2006.01)
C23C 16/509	(2006.01)
C23C 16/52	(2006.01)

(52) **U.S. Cl.**

CPC ***C23C 16/45565*** (2013.01); ***C23C 16/5096*** (2013.01); ***C23C 16/52*** (2013.01); ***H01J 37/3244*** (2013.01); ***H01J 37/32082*** (2013.01); ***H01J 37/32357*** (2013.01)

(58) **Field of Classification Search**

None

See application file for complete search history.

(56) **References Cited**

U.S. PATENT DOCUMENTS

6,207,487 B1	3/2001	Kim et al.
6,242,808 B1	6/2001	Shimizu et al.
6,251,242 B1	6/2001	Fu et al.
6,277,249 B1	8/2001	Gopalraja et al.

(Continued)

FOREIGN PATENT DOCUMENTS

JP	08227880 A	*	9/1996

OTHER PUBLICATIONS

PCT/US2015/044091—International Search Report and Written Opinion dated Nov. 19, 2015, 13 pages.

Primary Examiner — Anna Crowell

(74) *Attorney, Agent, or Firm* — Patterson & Sheridan, LLP

(57) **ABSTRACT**

The present invention provides an apparatus having a plasma profile control plate disposed in a plasma processing chamber so as to locally alter plasma density to provide uniform plasma distribution across a substrate surface during processing. In one embodiment, a process kit includes a plate configured to be disposed in a plasma processing chamber, a plurality of apertures formed therethrough, the apertures configured to permit processing gases to flow through the plate, and an array of unit cells including at least one aperture formed in the plate, wherein each unit cell has an electrode assembly individually controllable relative to electrode assemblies disposed in at least two other unit cells.

9 Claims, 5 Drawing Sheets

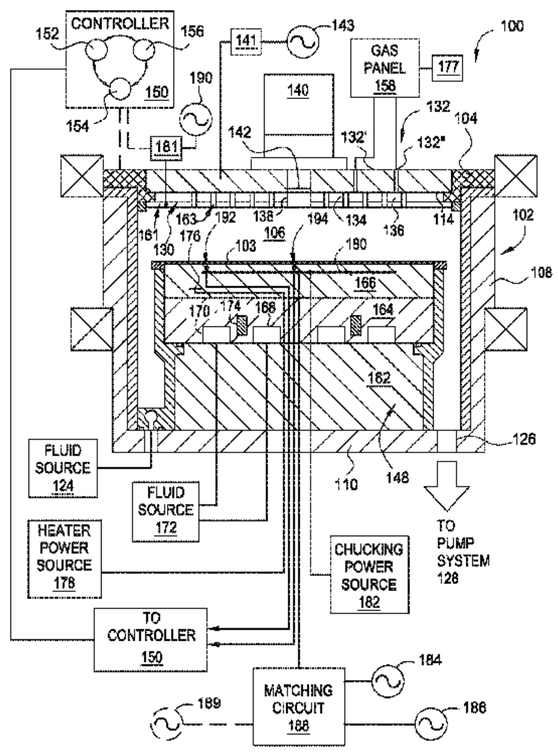

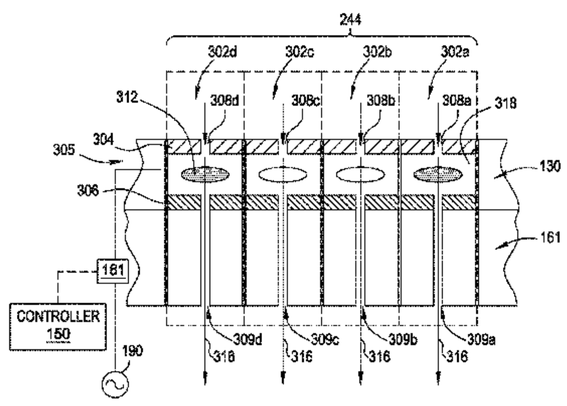

(56) **References Cited**

U.S. PATENT DOCUMENTS

6,284,646	B1	9/2001	Leem	
6,305,314	B1	10/2001	Sneh et al.	
6,335,240	B1	1/2002	Kim et al.	
6,344,419	B1	2/2002	Forster et al.	
6,348,376	B2	2/2002	Lim et al.	
6,358,829	B2	3/2002	Yoon et al.	
6,372,598	B2	4/2002	Kang et al.	
6,399,491	B2	6/2002	Jeon et al.	
6,416,822	B1	7/2002	Chiang et al.	
6,428,859	B1	8/2002	Chiang et al.	
6,451,119	B2	9/2002	Sneh et al.	
6,451,695	B2	9/2002	Sneh	
6,458,701	B1	10/2002	Chae et al.	
6,464,779	B1	10/2002	Powell et al.	
6,468,924	B2	10/2002	Lee et al.	
6,475,910	B1	11/2002	Sneh	
6,478,872	B1	11/2002	Chae et al.	
6,482,262	B1	11/2002	Elers et al.	
6,482,733	B2	11/2002	Raaijmakers et al.	
6,482,740	B2	11/2002	Soininen et al.	
6,489,214	B2	12/2002	Kim et al.	
6,511,539	B1	1/2003	Raaijmakers	
6,528,947	B1 *	3/2003	Chen	H01J 37/32596 118/723 R
6,534,395	B2	3/2003	Werkhoven et al.	
6,548,424	B2	4/2003	Putkonen	
6,551,929	B1	4/2003	Kori et al.	
6,569,501	B2	5/2003	Chiang et al.	
6,585,823	B1	7/2003	Van Wijck	
6,599,572	B2	7/2003	Saanila et al.	
6,607,976	B2	8/2003	Chen et al.	
6,620,670	B2	9/2003	Song et al.	
6,620,723	B1	9/2003	Byun et al.	
6,620,956	B2	9/2003	Chen et al.	
6,630,201	B2	10/2003	Chiang et al.	
6,632,279	B1	10/2003	Ritala et al.	
6,660,660	B2	12/2003	Haukka et al.	
6,686,271	B2	2/2004	Raaijmakers et al.	
7,543,546	B2 *	6/2009	Shibata	H01J 37/32009 118/723 E
7,976,674	B2 *	7/2011	Brcka	H01J 37/32082 118/723 AN
2002/0129769	A1	9/2002	Kim et al.	
2003/0052085	A1 *	3/2003	Parsons	H01J 37/32082 216/60
2003/0059538	A1	3/2003	Chung et al.	
2003/0079983	A1 *	5/2003	Long	H01J 37/32082 204/164
2006/0102286	A1	5/2006	Kim	
2006/0137820	A1	6/2006	Lee et al.	
2007/0037408	A1 *	2/2007	Tachibana	C23C 16/0245 438/778
2007/0209931	A1	9/2007	Miller	
2009/0211707	A1	8/2009	Chao et al.	
2009/0308739	A1	12/2009	Riker et al.	
2010/0096253	A1	4/2010	Cao et al.	
2011/0248633	A1	10/2011	Nauman et al.	
2012/0222616	A1	9/2012	Han et al.	
2012/0255678	A1 *	10/2012	Holland	H01J 37/32596 156/345.33
2012/0258555	A1 *	10/2012	Holland	H01J 37/32596 438/5
2012/0264291	A1	10/2012	Ganguli et al.	

* cited by examiner

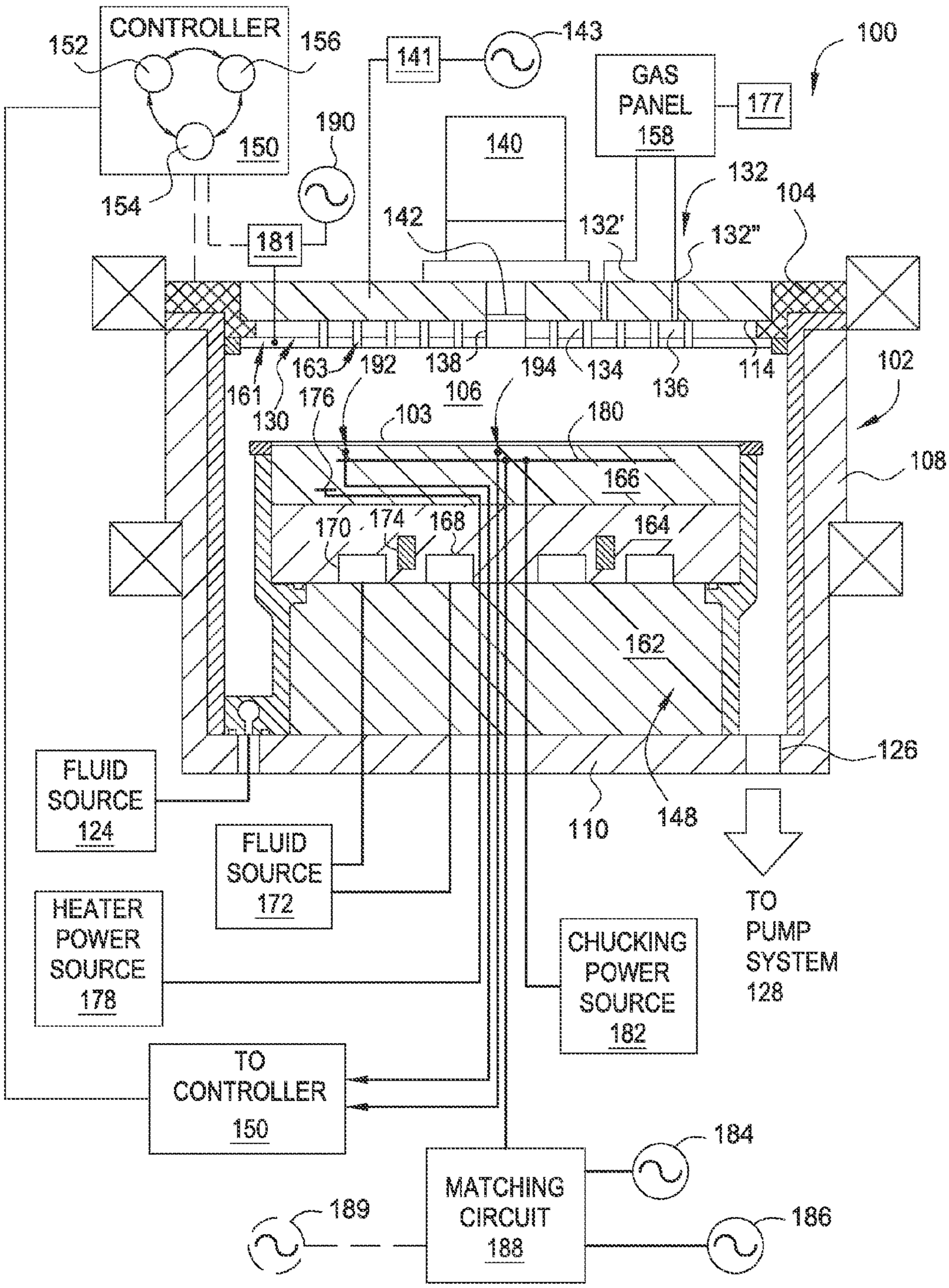
CONTROLLER
152
156
150
154
190
181
141
143
100
GAS PANEL 158
177
140
142
132'
132
132"
104
102
108
161
130
163
176
192
138
194
106
103
134
136
114
180
166
170
174
168
164
162
126
110
148
FLUID SOURCE 124
FLUID SOURCE 172
HEATER POWER SOURCE 178
CHUCKING POWER SOURCE 182
TO PUMP SYSTEM 128
TO CONTROLLER 150
MATCHING CIRCUIT 188
184
189
186

FIG. 1

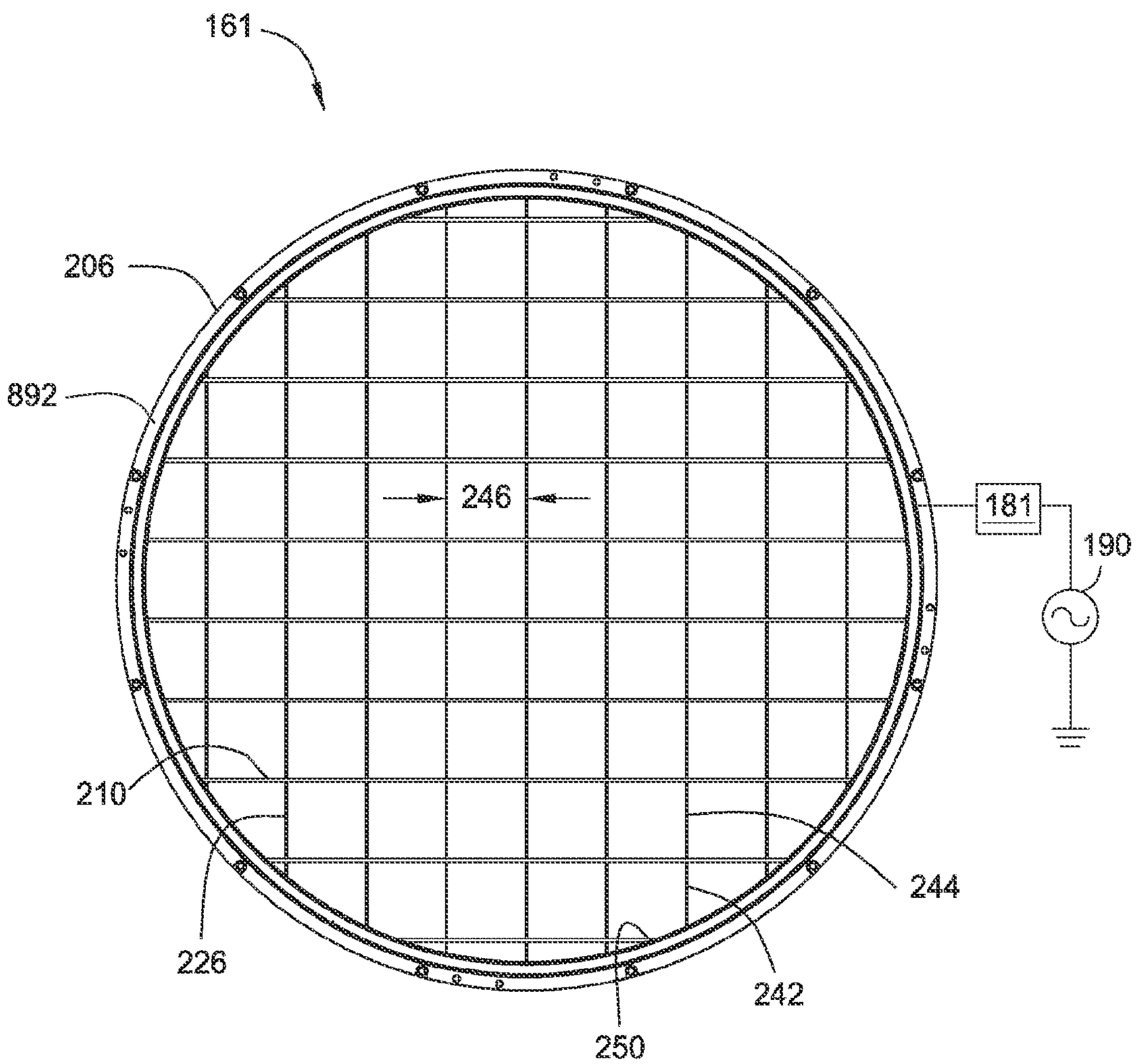

FIG. 2

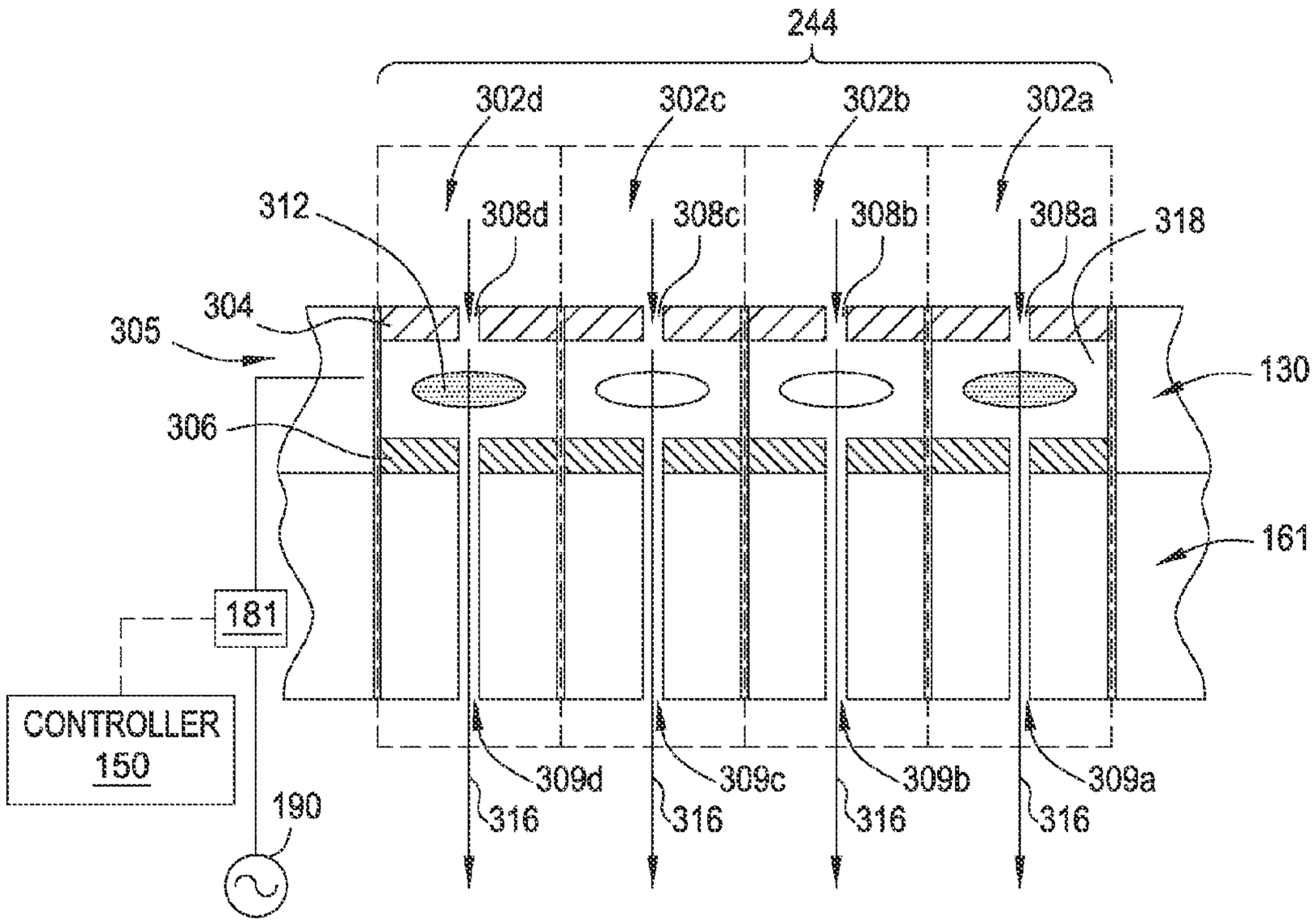
244
302d
302c
302b
302a
312
308d
308c
308b
308a
318
304
305
130
306
161
181
CONTROLLER
150
190
309d
309c
309b
309a
316
316
316
316

FIG. 3A

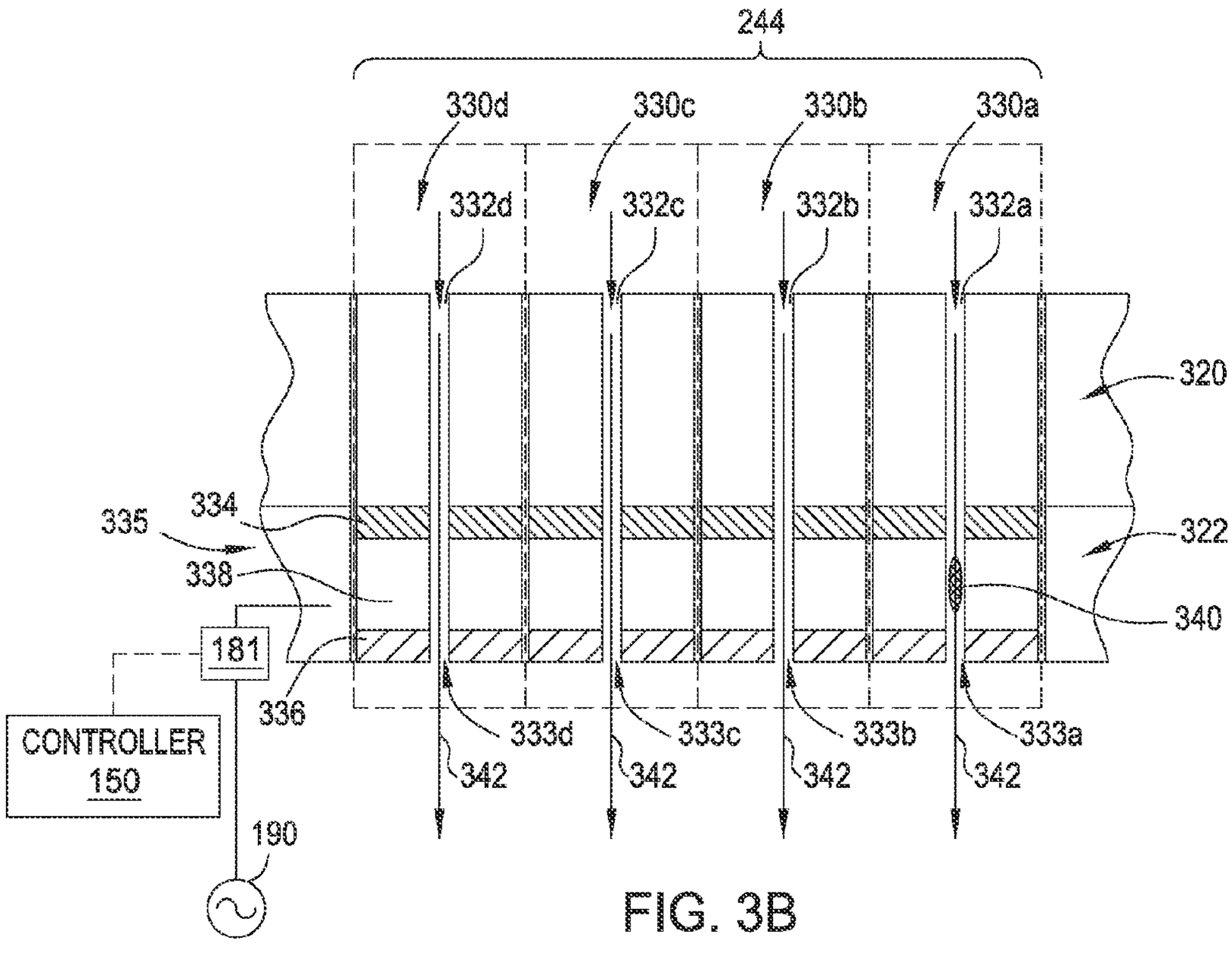
244
330d
330c
330b
330a
332d
332c
332b
332a
320
322
334
335
338
340
181
336
CONTROLLER
150
190
333d
333c
333b
333a
342
342
342
342

FIG. 3B

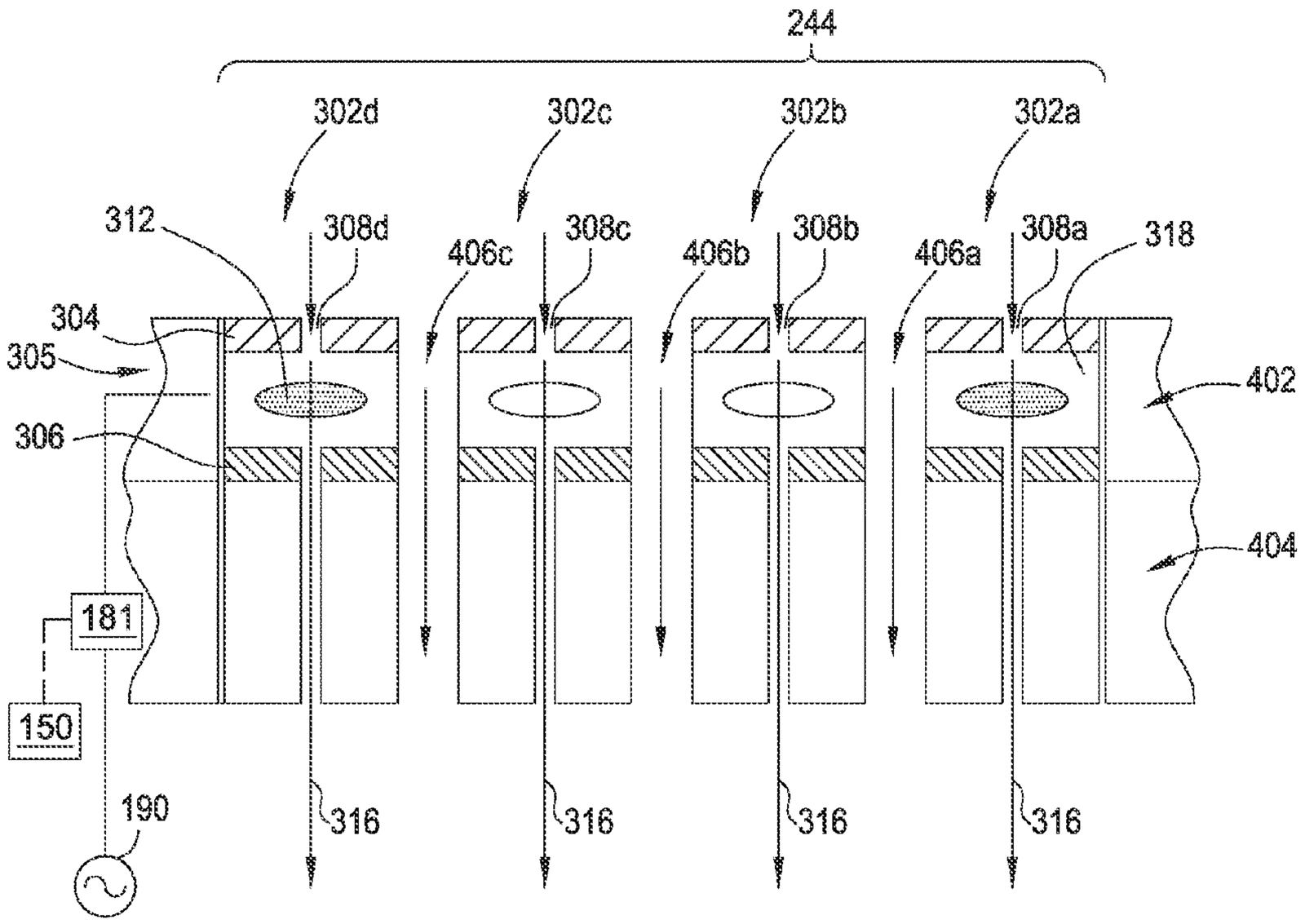
244
302d
302c
302b
302a
312
308d
406c
308c
406b
308b
406a
308a
318
304
305
306
402
404
181
150
190
316
316
316
316

FIG. 4A

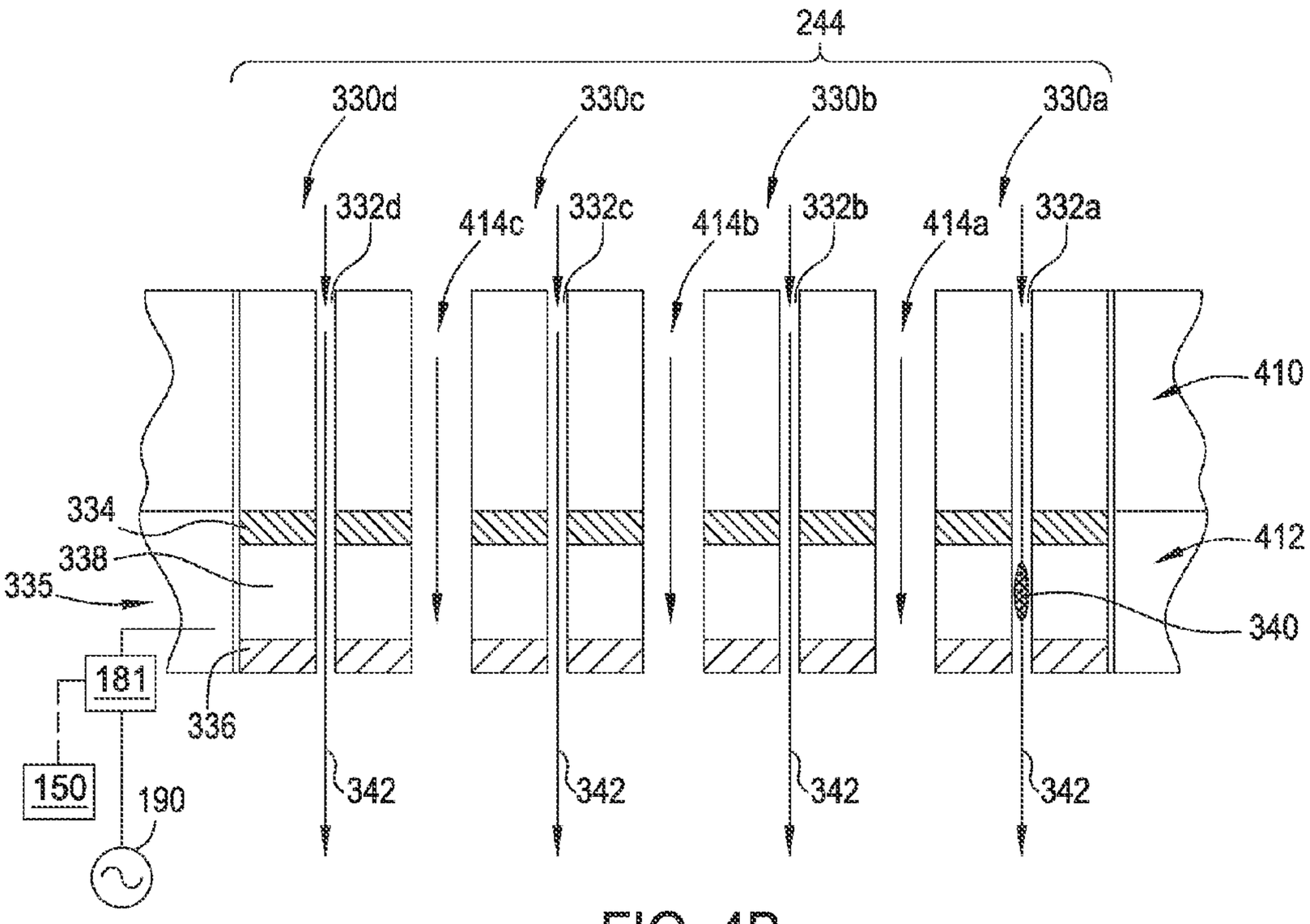
244
330d
330c
330b
330a
332d
414c
332c
414b
332b
414a
332a
410
334
338
412
335
340
181
336
150
190
342
342
342
342

FIG. 4B

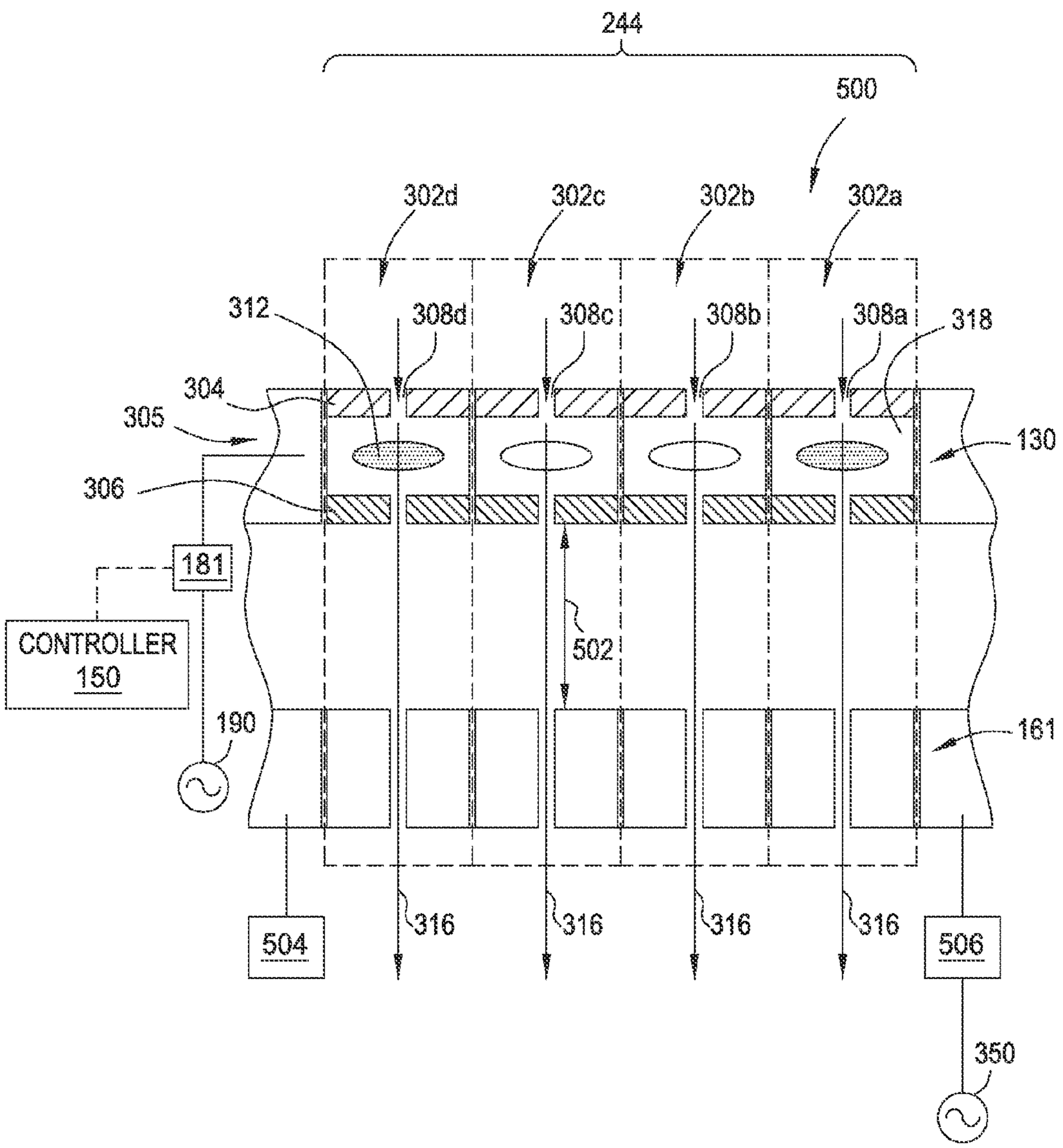
244
500
302d
302c
302b
302a
312
308d
308c
308b
308a
318
304
305
306
130
181
CONTROLLER
150
502
190
161
316
316
316
316
504
506
350

FIG. 5

PLASMA UNIFORMITY CONTROL BY ARRAYS OF UNIT CELL PLASMAS

CROSS-REFERENCE TO RELATED APPLICATIONS

This application claims benefit of U.S. Provisional Application Ser. No. 62/040,901, filed Aug. 22, 2014, of which is incorporated by reference in its entirety.

BACKGROUND OF THE DISCLOSURE

Field

Embodiments of the disclosure generally relate to a plasma profile control plate utilized in a plasma processing chamber for forming a plasma with uniform distribution, and more particularly, a plasma profile control plate with individual controllable cells to locally alter and control plasma distribution across a substrate surface disposed in a plasma processing chamber in a semiconductor manufacturing process.

Description of the Background Art

Reliably producing submicron and smaller features is one of the key technologies for the next generation of very large scale integration (VLSI) and ultra large scale integration (ULSI) of semiconductor devices. However, as the miniaturization of circuit technology is pressed, the shrinking dimensions of interconnects in VLSI and ULSI technology have placed additional demands on the processing capabilities. The multilevel interconnects that lie at the heart of this technology require precise processing of high aspect ratio features, such as vies and other interconnects. Reliable formation of these interconnects is very important to VLSI and ULSI success and to the continued effort to increase circuit density and quality of individual substrates.

As circuit densities increase for next generation devices, the widths of interconnects, such as vias, trenches, contacts, gate structures and other features, as well as the dielectric materials therebetween, decrease to 45 nm and 32 nm dimensions, whereas the thickness of the dielectric layers remain substantially constant, with the result of increasing the aspect ratios of the features.

Many semiconductor devices are processed in the presence of a plasma. The plasma may be easily ignited in processing chambers that utilized capacitively coupled power, inductively coupled power, or microwave power to energize the gases forming the plasma. However, the plasma generated in the processing chamber may often not be uniformly distributed all across an entire surface of the substrate. For example, the plasma may not always extend to an edge of the substrate, resulting in different edge to center processing rates. Non-uniform plasma distribution at different locations across the substrate surface may result in asymmetrical or non-uniform processing profiles of the target-processing material disposed on the substrate. As such, non-uniform plasma distribution across the substrate surface may eventually result in defects, such as feature deformation, line edge roughness or tapered top portion of the features translated into the target-processing material.

Therefore, there is a need for an improved method and apparatus for uniform plasma distribution control across a substrate surface during a plasma process.

SUMMARY

The present disclosure provides an apparatus having a plasma profile control plate disposed in a plasma processing chamber so as to locally alter plasma density to provide uniform plasma distribution across a substrate surface during processing. In one embodiment, a process kit includes a plate configured to be disposed in a plasma processing chamber, a plurality of apertures formed therethrough, the apertures configured to permit processing gases to flow through the plate, and an array of unit cells including at least one aperture formed in the plate, wherein each unit cell has an electrode assembly individually controllable relative to electrode assemblies disposed in at least two other unit cells.

In another embodiment, a plasma processing chamber includes a showerhead assembly having a first plurality of apertures formed therein, a plasma profile control plate assembly having a second plurality of apertures formed therein disposed adjacent to the showerhead assembly, wherein the second plurality of apertures are aligned with the first plurality of apertures that allow processing gases to flow therethrough, and an array of unit cells disposed in the showerhead assembly or in the plasma profile control plate, wherein at least two unit cells are individually powerable relative to the other unit cells.

In yet another embodiment, a method for controlling profile of a plasma formed in a plasma processing chamber includes supplying a processing gas through a showerhead assembly and a plasma profile control plate to a processing region defined in a processing chamber, individually applying different power levels to different unit cells defined in the showerhead assembly or in the plasma profile control plate, and forming plasma with different local plasma density in the unit cell having the applied power.

BRIEF DESCRIPTION OF THE DRAWINGS

So that the manner in which the above recited features of the present invention are attained and can be understood in detail, a more particular description of the invention, briefly summarized above, may be had by reference to the embodiments thereof which are illustrated in the appended drawings.

FIG. **1** depicts a schematic cross-sectional view of one example of a process chamber having a plasma profile control plate;

FIG. **2** depicts a top view of one example of the plasma profile control plate:

FIG. **3**A depicts a cross sectional view of a plasma profile control plate that may be utilized in a plasma processing chamber;

FIG. **3**B depicts a cross sectional view of another example of a plasma profile control plate that may be utilized in a plasma processing chamber;

FIG. **4**A depicts a cross sectional view of yet another example of a plasma profile control plate that may be utilized in a plasma processing chamber;

FIG. **4**B depicts a cross sectional view of still another example of a plasma profile control plate that may be utilized in a plasma processing chamber; and

FIG. **5** depicts a cross sectional view of still another example of a plasma profile control plate and a showerhead plate that may be utilized in a plasma processing chamber.

To facilitate understanding, identical reference numerals have been used, where possible, to designate identical elements that are common to the figures. It is contemplated that elements and features of one embodiment may be beneficially incorporated in other embodiments without further recitation.

It is to be noted, however, that the appended drawings illustrate only exemplary examples of this invention and are

therefore not to be considered limiting of its scope, for the invention may admit to other equally effective embodiments.

DETAILED DESCRIPTION

A plasma processing apparatus having a plasma profile control plate and methods of plasma processing using the same are disclosed herein. The plasma profile control plate may comprise an array of plasma unit cells that may be individually controllable supply different levels of power to addressably alter the density, profile and distribution of a plasma present in the processing chamber. By doing so, plasma distribution may be locally changed or altered so as to provide a uniform plasma distribution across a substrate surface disposed in the plasma processing apparatus, thereby enhancing the uniformity of plasma processing results.

FIG. **1** is a sectional view of one example of a processing chamber **100** suitable for performing a plasma process on a material layer disposed on a substrate. Suitable processing chambers that may be adapted for use with the teachings disclosed herein include, for example, an ENABLER® or C3® processing chamber available from Applied Materials, Inc. of Santa Clara, Calif. Although the processing chamber **100** is shown including a plurality of features that enable superior plasma processing performance, it is contemplated that other processing chambers may be adapted to benefit from one or more of the inventive features disclosed herein. It is noted that any type of plasma processing chambers, including etching, deposition, plasma ion implant, plasma immersion, or any suitable plasma processes, may also be adapted to benefited from the present disclosure.

The processing chamber **100** includes a chamber body **102** and a lid **104** which enclose an interior volume **106**. The chamber body **102** is typically fabricated from aluminum, stainless steel or other suitable material. The chamber body **102** generally includes sidewalls **108** and a bottom **110**. A substrate access port (not shown) is generally defined in a sidewall **108** and a selectively sealed by a slit valve to facilitate entry and egress of a substrate **103** from the processing chamber **100**. An exhaust port **126** is defined in the chamber body **102** and couples the interior volume **106** to a pump system **128**. The pump system **128** generally includes one or more pumps and throttle valves utilized to evacuate and regulate the pressure of the interior volume **106** of the processing chamber **100**. In one implementation, the pump system **128** maintains the pressure inside the interior volume **106** at operating pressures between about 10 mTorr to about 500 Torr.

The lid **104** is sealingly supported on the sidewall **108** of the chamber body **102**. The lid **104** may be opened to allow excess to the interior volume **106** of the processing chamber **100**. The lid **104** includes a window **142** that facilitates optical process monitoring. In one implementation, the window **142** is comprised of quartz or other suitable material that is transmissive to a signal utilized by an optical monitoring system **140** mounted outside the processing chamber **100**.

The optical monitoring system **140** is positioned to view at least one of the interior volume **106** of the chamber body **102** and/or the substrate **103** positioned on a substrate support pedestal assembly **148** through the window **142**. In one embodiment, the optical monitoring system **140** is coupled to the lid **104** and facilitates an integrated deposition process that uses optical metrology to provide information that enables process adjustment to compensate for incoming substrate pattern feature inconsistencies (such as thickness, and the like), provide process state monitoring (such as plasma monitoring, temperature monitoring, and the like) as needed. One optical monitoring system that may be adapted to benefit from the invention is the EyeD® full-spectrum, interferometric metrology module, available from Applied Materials, Inc., of Santa Clara, Calif.

A gas panel **158** is coupled to the processing chamber **100** to provide process and/or cleaning gases to the interior volume **106**. In the example depicted in FIG. **1**, inlet ports **132'**, **132"** are provided in the lid **104** to allow gases to be delivered from the gas panel **158** to the interior volume **106** of the processing chamber **100**. In one implementation, the gas panel **158** is adapted to provide fluorinated process gas through the inlet ports **132'**, **132"** and into the interior volume **106** of the processing chamber **100**. In one implementation, the process gas provided from the gas panel **158** includes at least a fluorinated gas, chlorine, and a carbon containing gas, an oxygen gas, a nitrogen containing gas and a chlorine containing gas. Examples of fluorinated and carbon containing gases include CHF_3, CH_2F_2 and CF_4. Other fluorinated gases may include one or more of C_2F, C_1F_6, C_3F_8 and C_5F_8. Examples of the oxygen containing gas include O_2, CO_2, CO, N_2O, NO_2, O_3, H_2O, and the like. Examples of the nitrogen containing gas include N_2, NH_3, N_2O, NO_2 and the like. Examples of the chlorine containing gas include HCl, Cl_2, CCl_4, $CHCl_3$, CH_2Cl_2, CH_3Cl, and the like. Suitable examples of the carbon containing gas include methane (CH_4), ethane (C_2H_6), ethylene (C_2H_4), and the like.

A showerhead assembly **130** is coupled to an interior surface **114** of the lid **104**. The showerhead assembly **130** includes a plurality of apertures **163** that allow the gases flowing through the showerhead assembly **130** from the inlet ports **132'**, **132"** into the interior volume **106** of the processing chamber **100** in a predefined distribution across the surface of the substrate **103** being processed in the processing chamber **100**.

A plasma profile control plate **161** may be coupled to the showerhead assembly **130**. A plurality of apertures formed in the plasma profile control plate **161** aligned with the apertures **163** formed in the showerhead assembly **130** so as to facilitate gas flow through the showerhead assembly **130** into the interior region **106** of the processing chamber **100**. The plasma profile control plate **161** is coupled to a power source **190** through a switching circuit **181**. Details regarding the structures and configurations of the showerhead assembly **130** and the plasma profile control plate **161** will be further discussed below with reference to FIG. **2** to FIG. **4**B.

A remote plasma source **177** may be optionally coupled to the gas panel **158** to facilitate dissociating gas mixture from a remote plasma prior to entering into the interior volume **106** for processing. A RF source power **143** is coupled through a matching network **141** to the showerhead assembly **130**. The RF source power **143** typically is capable of producing up to about 3000 W at a tunable frequency in a range from about 50 kHz to about 200 MHz.

The showerhead assembly **130** additionally includes a region transmissive to an optical metrology signal. The optically transmissive region or passage **138** is suitable for allowing the optical monitoring system **140** to view the interior volume **106** and/or the substrate **103** positioned on the substrate support pedestal assembly **148**. The passage **138** may be a material, an aperture or plurality of apertures formed or disposed in the showerhead assembly **130** that is substantially transmissive to the wavelengths of energy generated by, and reflected back to, the optical monitoring

system **140**. In one embodiment, the passage **138** includes a window **142** to prevent gas leakage through the passage **138**. The window **142** may be a sapphire plate, quartz plate or other suitable material. The window **142** may alternatively be disposed in the lid **104**.

In one implementation, the showerhead assembly **130** is configured with a plurality of zones that allow for separate control of gas flowing into the interior volume **106** of the processing chamber **100**. In the example illustrated in FIG. **1**, the showerhead assembly **130** as an inner zone **134** and an outer zone **136** that are separately coupled to the gas panel **158** through separate inlet ports **132'**, **132"**.

The substrate support pedestal assembly **148** is disposed in the interior volume **106** of the processing chamber **100** below the gas distribution (showerhead) assembly **130** and the plasma profile control plate **161**. The substrate support pedestal assembly **148** holds the substrate **103** during processing. The substrate support pedestal assembly **148** generally includes a plurality of lift pins (not shown) disposed therethrough that are configured to lift the substrate **103** from the substrate support pedestal assembly **148** and facilitate exchange of the substrate **103** with a robot (not shown) in a conventional manner. An inner liner **118** may closely circumscribe the periphery of the substrate support pedestal assembly **148**.

In one implementation, the substrate support pedestal assembly **148** includes a mounting plate **162**, a base **164** and an electrostatic chuck **166**. The mounting plate **162** is coupled to the bottom **110** of the chamber body **102** includes passages for routing utilities, such as fluids, power lines and sensor leads, among others, to the base **164** and the electrostatic chuck **166**. The electrostatic chuck **166** comprises at least one clamping electrode **180** for retaining the substrate **103** below showerhead assembly **130** and the plasma profile control plate **161**. The electrostatic chuck **266** is driven by a chucking power source **282** to develop an electrostatic force that holds the substrate **103** to the chuck surface, as is conventionally known. Alternatively, the substrate **103** may be retained to the substrate support pedestal assembly **148** by clamping, vacuum or gravity.

At least one of the base **164** or electrostatic chuck **166** may include at least one optional embedded heater **176**, at least one optional embedded isolator **174** and a plurality of conduits **168**, **170** to control the lateral temperature profile of the substrate support pedestal assembly **148**. The conduits **168**, **170** are fluidly coupled to a fluid source **172** that circulates a temperature regulating fluid therethrough. The heater **176** is regulated by a power source **178**. The conduits **168**, **170** and heater **176** are utilized to control the temperature of the base **164**, thereby heating and/or cooling the electrostatic chuck **166** and ultimately, the temperature profile of the substrate **103** disposed thereon. The temperature of the electrostatic chuck **166** and the base **164** may be monitored using a plurality of temperature sensors **192**, **194**. The electrostatic chuck **166** may further comprise a plurality of gas passages (not shown), such as grooves, that are formed in a substrate support pedestal supporting surface of the chuck **166** and fluidly coupled to a source of a heat transfer (or backside) gas, such as He. In operation, the backside gas is provided at controlled pressure into the gas passages to enhance the heat transfer between the electrostatic chuck **166** and the substrate **103**.

In one implementation, the substrate support pedestal assembly **148** is configured as a cathode and includes an electrode **180** that is coupled to a plurality of RF power bias sources **184**, **186**. The RF bias power sources **184**, **186** are coupled between the electrode **280** disposed in the substrate support pedestal assembly **148** and another electrode, such as the showerhead assembly **130** (or the plasma profile control plate **161**) or ceiling (lid **104**) of the chamber body **102**. The RF bias power excites and sustains a plasma discharge formed from the gases disposed in the processing region of the chamber body **102**.

In the example depicted in FIG. **1**, the dual RF bias power sources **184**, **186** are coupled to the electrode **180** disposed in the substrate support pedestal assembly **148** through a matching circuit **188**. The signal generated by the RF bias power sources **184**, **186** is delivered through matching circuit **188** to the substrate support pedestal assembly **148** through a single feed to ionize the gas mixture provided in the plasma processing chamber **100**, thereby providing ion energy necessary for performing a deposition or other plasma enhanced process. The RF bias power sources **184**, **186** are generally capable of producing an RF signal having a frequency of from about 50 kHz to about 200 MHz and a power between about 0 Watts and about 5000 Watts. An additional bias power source **189** may be coupled to the electrode **180** to control the characteristics of the plasma.

In one mode of operation, the substrate **103** is disposed on the substrate support pedestal assembly **148** in the plasma processing chamber **100**. A process gas and/or gas mixture is introduced into the chamber body **102** through the showerhead assembly **130** from the gas panel **158**. A vacuum pump system **128** maintains the pressure inside the chamber body **102** while removing processing by-products.

A controller **150** is coupled to the processing chamber **100** to control operation of the processing chamber **100**. The controller **150** includes a central processing unit (CPU) **152**, a memory **154**, and a support circuit **156** utilized to control the process sequence and regulate the gas flows from the gas panel **158**. The CPU **152** may be any form of general purpose computer processor that may be used in an industrial setting. The software routines can be stored in the memory **154**, such as random access memory, read only memory, floppy, or hard disk drive, or other form of digital storage. The support circuit **156** is conventionally coupled to the CPU **152** and may include cache, dock circuits, input/output systems, power supplies, and the like. Bi-directional communications between the controller **150** and the various components of the processing chamber **100** are handled through numerous signal cables.

FIG. **2** depicts a top view of the plasma profile control plate **161** that may be disposed in the processing chamber **100** of FIG. **1**. The plasma profile control plate **161** is generally planar structure having square or rectangular structure having walls **226** separating an array of cells **244** arranged in a close-packed arrangement. Each cell **244** forms an aperture through the plate **161**. An aspect ratio of the square cells **244** may be defined as the depth of the cells **244** divided by the width **246** of the cell **244**. In one example, the thickness of the walls **226** is between about 0.1 inches and about 3 inches. In one embodiment, the plasma profile control plate **161** is comprised of a material selected from aluminum, copper, and stainless steel. In one example, the walls **226** and the cells **244** have a close packed polygonal structures, such as square or hexagonal. In other examples, the walls **226** and cells **244** have other non-polygonal geometry to provide apertures through the plate **161** in a close-packed or spaced arrangement.

The structure of the each cell **244** formed in the plasma profile control plate **161** may serve as a plasma profile optimizer to optimize the uniformity of flow path, ion fraction, plasma distribution and ion trajectory behavior of ions passing through the plasma profile control plate **161**.

In one embodiment, the plasma profile control plate **161** may be machined or formed from a single mass of aluminum. The plasma profile control plate **161** may optionally be coated or anodized. Suitable coating materials include rare earth metal dielectric materials, such as silicon carbide, aluminum nitride, aluminum oxide, aluminum oxynitride, yttrium containing materials, yttrium oxide (Y_2O_3), yttrium-aluminum-garnet (YAG), titanium oxide (TiO), or titanium nitride (TiN), or the like. Alternatively, the plasma profile control plate **161** may be made from other materials compatible with the processing environment, and may also be comprised of one or more sections.

The plasma profile control plate **161** functions as a plasma distribution controller to and addressably locally enhance or redistribute ions and neutrals to be accelerated toward the substrate **103**. The plasma profile control plate **161** may have an aspect ratio change across the width of the plasma profile control plate **161** as needed to allow different percentage of ions passing therethrough so as to alter plasma distribution across the width of the processing chamber. As a result, both distribution of plasma and the number of ions traveled onto peripheral regions and center regions of the substrate **103** are adjusted and controlled.

In one embodiment, the power source **190** coupled to the plasma profile control plate **161** through the switching circuit **181** may supply power to the plasma profile control plate **161** in a continuous mode, or in pulsing or alternating fashion to assist locally changing of the plasma generated in each cell **244** of the plasma profile control plate **161**. The power source **190** is configured to provide negative and/or positive voltage, either in pulse mode or in continuous mode, to the plasma profile control plate **161** so as to control the plasma distribution passing through the plasma profile control plate **161**.

It is believed that voltage from the power source **190** applied to the plasma profile control plate **161** may draw or repel electrons in the plasma so as to alert the distribution and profile of the plasma passing therethrough. Furthermore, the switching circuit **181** coupled to the profile control plate may assist switching the power to different unit cells **244** formed in the plasma profile control plate **161**. Thus, by locally applying different voltage levels to different cells **244** defined in the plasma profile control plate **161**, plasma distribution, density, strength, profile, and ion flux may be locally and individually controlled, so that directionality of the ions and neutrals and plasma distribution may be efficiently controlled.

FIG. **3** depicts a cross sectional view of one embodiment of a portion of the showerhead assembly **130** and the plasma profile control plate **161** attached to the showerhead assembly **130**. The showerhead assembly **130** includes the array of unit cells **244**, shown as **302***a*, **302***b*, **302***c*, **302***d*. Each cell **244** includes a first plurality of apertures, shown as **308***a*, **308***b*, **308***c*, **308***d* and a second plurality of apertures **309***a*, **309***b*, **309***c*, **309***d* aligning with the apertures **308***a*, **308***b*, **308***c*, **308***d* that allows processing gases **316** to pass therethrough.

In one embodiment, the first plurality of apertures **308***a*, **308***b*, **308***c*, **308***d* formed in the showerhead assembly **130** has a diameter between about 1 mm and about 100 mm. The second plurality of apertures **309***a*, **309***b*, **309***c*, **309***d* has a diameter substantially matched with the diameters of the apertures **308***a*, **308***b*, **308***c*, **308***d* formed in the showerhead assembly **130**. Alternatively, the second plurality of apertures **309***a*, **309***b*, **309***c*, **309***d* may have a diameter between about 1 mm and about 100 mm.

In one embodiment, the plasma profile control plate **161** may be removably coupled to the showerhead assembly **130**. Alternatively, the plasma profile control plate **161** may be formed as an integral part of the showerhead assembly **130**.

The showerhead assembly **130** further includes an electrode assembly **305**. The electrode assembly **305** disposed in the showerhead assembly **130** includes at least two sets of electrodes **304**, **306**, one of which functioning as a cathode and the other functioning as an anode. A cavity **318** may be formed between the electrodes **304**, **306** that allow the processing gases supplied thereto to generate a plasma **312** when the electrodes **304**, **306** are powered. Each electrode **304**, **306** may be charged with the same or different voltage levels as needed from the power source **190** controlled by the switching circuit **181**. Each electrode **304**, **306** may each have a plurality of geometric forms disposed in each unit cells **302***a*, **302***b*, **302***c*, **302***d*. In one embodiment, the electrode **304**, **306** may be in form of a series of segments individually disposed in each unit cells **302***a*, **302***b*, **302***c*, **302***d* of the showerhead assembly **130**. Each segment of the electrodes **304**, **306** located in each unit cell **302***a*, **302***b*, **302***c*, **302***d* may be individually powered and controllable. That is, the electrodes **304**, **304** of cell **302***a* may be controlled separately and independently of the voltages applied to at least on other cell (cell **302***b* for example) by control of the switching circuit **181** coupled to the power source **190**. Thus, each cell **244** may be addressably powered independently of the other cells **244**. In the situations when a processing chamber configuration provides a non-uniform plasma distribution across the substrate surface, the voltage selectively applied to the electrodes **304**, **306** located in each unit cell **302***a*, **302***b*, **302***c*, **302***d* may be individually controlled so as to locally change the density, intensity and strength of the plasma **312** as generated in the cavity **318** of each cell **244**, so as to assist making the plasma uniform across the substrate surface.

In one example, the showerhead assembly **130** and the plasma profile control plate **161** may be fabricated from similar materials. For example, the showerhead assembly **130** and the plasma profile control plate **161** may be fabricated from a metallic material, such as aluminum, aluminum alloy, aluminum silicon alloy, stainless steel or other suitable materials.

In one example, the upper electrode **304** may serve as an anode and the lower electrode **306** may serve as a cathode when powered. When the electrodes **304**, **306** of a selected cell **244** are powered, the plasma **312** may be formed in the cavity **318** of that cell **244** to dissociate processing gases with ions, neutrals, charges, electrons and radicals. By locally applying different power levels of the voltage to each unit cell **302***a*, **302***b*, **302***c*, **302***d*, the plasma **312** as generated between the upper electrode **304** and the lower electrode **306** may be individually changed in each unit cell **302***a*, **302***b*, **302***c*, **302***d*, so as to locally change plasma distribution, profile, density, or intensity, so as to compensate for non-uniformity in the plasma disposed between the plasma profile control plate **161** and the substrate **103**. Thus, as each cell **244** may be individually addressed to provide a plasma within each individual cell **244**, the plasma profile control plate **161** may compensate and correct plasma non-uniformities that may be created by asymmetrical chamber designs, RF asymmetries, and gas flow asymmetries.

The power source **190** is configured to provide a voltage power to the upper and lower electrodes **304**, **306** to generate the plasma **312** therebetween. In one embodiment, the power source **190** may be configured to provide a DC or AC power to the upper and the lower electrode **304**, **306**. The voltage

as supplied from the power source **190** to the upper and lower electrodes **304**, **306** may be controlled in a pulsed mode to pulse alternating positive and negative voltages to the upper and lower electrodes **304**, **306**. Alternatively, the voltage as supplied from the power source **190** may be in continuous mode as needed. The power, either in continuous mode or in pulse mode may be modulated to effectuate a locally controllable format so as to provide a desired deposition/etching profile of a target material disposed on the substrate.

During operation, a voltage may be applied to the upper or the lower electrode **304**, **306**, or both, to generate the plasma **312** in presence of a processing gas **316** supplied in the cavity **318**. When the power from the power source **190** is applied in pulse mode, the pulsed power may have a duty cycle between about 5 percent (e.g., 5 percent on and 95 percent off) to about 70 percent (e.g., 70 percent on and 30 percent off), such as between about 5 percent and about 50 percent, such as between about 15 percent to 45 percent, at a frequency between about 2 Hz and about 60 MHz. Alternatively, the cycle of the voltage power pulsed to the showerhead assembly **130** may be controlled by a predetermined number of time periods performed. For example, the voltage power may be pulsed between about every 1 millisecond and about every 100 milliseconds. In one embodiment, the power may be controlled at between about 1 KWatts and about 10 KWatts. In the embodiment wherein a continuous mode is applied, the power may be supplied to the showerhead assembly **130** between about 0.1 KWatts and about 500 KWatts.

When applying the power from the power source **190**, the gas mixture as supplied may include reactive gas, non-reactive gas, inert gas, and the like. Examples of reactive and non-reactive gas include, but not limited to, halogen containing gas, hydrocarbon containing gas, silicon containing gas, carbon containing gas, I_2, N_2, N_2O, NO_2, NH_3, and H_2O, among others. Examples of inert gas include, but not limited to, Ar, Ne, He, Xe, and Kr, among others.

FIG. **3**B depicts a cross sectional view of another example of a portion of a showerhead assembly **320** and a plasma profile control plate **322** attached to the showerhead assembly **320**. The showerhead assembly **320** and the plasma profile control plate **322** may be similar to the showerhead assembly **130** and the plasma profile control plate **161** depicted above which may be implemented into the processing chamber **100**. Similar to the configuration of the showerhead assembly **130** and the plasma profile control plate **161** depicted in FIG. **3**A, instead of forming the electrode assembly **305** in the showerhead assembly **130**, an electrode assembly **335**, similar to the electrode assembly **305** depicted in FIG. **3**A, is disposed in the plasma profile control plate **322**. The electrode assembly **335** includes an upper electrode **334** and a lower electrode **336** disposed therein. Similarly, the upper electrode **334** and the lower electrode **336** may be in form of metallic segments located in each unit cells **244**, individually showing as unit cells **330***a*, **330***b*, **330***c*, **330***d*. Similarly, the showerhead assembly **320** includes a first plurality of apertures **332***a*, **332***b*, **332***c*, **332***d* formed therein defined in each unit cell **330***a*, **330***b*, **330***c*, **330***d*. The plasma profile control plate includes a second plurality of apertures **333***a*, **333***b*, **333***c*, **333***d* formed therein aligning with the first plurality of apertures **332***a*, **332***b*, **332***c*, **332***d* formed in the showerhead assembly **320** defined in each unit cell **330***a*, **330***b*, **330***c*, **330***d*.

In one example, a cavity **338** may or may not be formed between the upper and lower electrodes **334**, **336**. In the embodiment wherein the cavity **338** is formed therebetween, the processing gas **342** flowing therethrough may have a wider window to extend when forming a plasma, thus providing a space for a more thorough ion dissociation. In the embodiment wherein the cavity **338** is not formed, the plasma **340** as generated may stay in the apertures **333***d* defined in each unit cell **330***a*, **330***b*, **330***c*, **330***d*.

The power source **190** may be coupled to the plasma profile control plate **322** to individually and locally control plasma generation in each unit cell **330***a*, **330***b*, **330***c*, **330***d*, as the manner described above with reference to FIG. **3**A. The power source **190** applied to the plasma profile control plate **322** may be in pulse mode or in continuous mode as needed.

FIGS. **4**A and **43** depict different embodiments of portions of showerhead assemblies **402**, **410** and plasma profile control plates **404**, **412** respectively. Similar to the configuration of the showerhead assembly **130** and the plasma profile control plate **161** described in FIG. **3**A, the electrode assembly **305** is disposed in the showerhead assembly **402** and the plasma profile control plate **404** attached to the showerhead assembly **402** while with additional passages **406***a*, **406***b*, **406***c* formed in between each unit cell **302***a*, **302***b*, **302***c*, **302***d* defined in the showerhead assembly **402** and the plasma profile control plate **404**. It is believed that the additional passages **406***a*, **406***b*, **406***c* formed in the showerhead assembly **402** and the plasma profile control plate **404** may assist carrying a greater amount of processing gases into the processing chamber, as compared to the example shown in FIG. **3**A, so as to assist providing a more uniform distribution of the plasma formed across the substrate surface.

Similarly, in the example depicted in FIG. **43**, the electrode assembly **335** is disposed in the plasma profile control plate **412** attached to the showerhead assembly **410**, similar to the configuration described in FIG. **3**B. Additional passages **414***a*, **414***b*, **414***c* and formed in between each unit cell **330***a*, **330***b*, **330***c*, **330***d* defined in the showerhead assembly **410** and the plasma profile control plate **412**. It is believed that the additional passages **406***a*, **406***b*, **406***c* formed in the showerhead assembly **402** and the plasma profile control plate **404** may assist carrying greater amount of processing gases into the processing chamber, as compared to the example shown in FIG. **3**B, so as to assist providing a more uniform distribution of the plasma formed across the substrate surface.

FIG. **5** depicts yet another example of the showerhead assembly **230** and the plasma profile control plate **161** configured in a spaced-apart relationship. Although the example depicted in FIG. **5** has the electrode assembly **305** disposed in the showerhead assembly **130** without additional passages **406***a*, **406***b*, **406***c* formed therebetween, it is noted that the electrode assembly **305** may be disposed in the plasma profile control plate **161** as described above with reference to FIGS. **3**B and **4**B, with or without the additional passages **414***a*, **414***b*, **414***c* formed therein. In one embodiment, the showerhead assembly **230** and the plasma profile control plate **161** may be spaced by a distance **502** to the showerhead assembly **130** to avoid possible interference when a power is applied to the showerhead assembly **130** and the plasma profile control plate **161**. In the embodiment where the electrode assembly **305** is disposed in the showerhead assembly **130**, as depicted in FIG. **5**, the voltage power is then applied to the electrode assembly **305** disposed in the showerhead assembly **130** through the power source **190**. For example, voltage applied to the showerhead assembly **130** may generate a current that may create interference to the nearby metallic materials, such as the

plasma profile control plate **161**. As a result, plasma arcing, electrical spikes, or charging may be adversely generated due to excess charge accumulation or current interface. Accordingly, by maintaining the showerhead assembly **130** and the plasma profile control plate **261** in a spaced-apart relationship, undesired current interference or excess charge accumulation may be eliminated, thereby efficient reducing the likelihood of particle, defect generation and contribution to plasma non-uniformity.

Thus, apparatus having an electrode assembly disposed either in a showerhead assembly or a plasma profile distribution plate with individual plasma controllable unit cells disposed in a plasma processing chamber and methods of using the same have provided herein. By utilizing an electrode assembly having separately controllable unit cells, unit plasmas formed in each unit cell may be locally and individually controlled, so as to efficiently alter or change plasma density/intensity, ion trajectory behavior or plasma uniformity of the main plasma used to process a substrate.

While the foregoing is directed to embodiments of the present invention, other and further embodiments of the invention may be devised without departing from the basic scope thereof, and the scope thereof is determined by the claims that follow.

What is claimed is:

1. A process kit, comprising:

a plate configured to be disposed in a plasma processing chamber;

a plurality of apertures formed therethrough, the apertures configured to permit processing gases to flow through the plate; and

an array of unit cells defined by at least one of the apertures, wherein each unit cell has an electrode assembly, each electrode assembly disposed in each unit cell is individually controllable by a power source and each electrode assembly includes a first electrode and a second electrode disposed parallel with the first electrode and a cavity defined between the first and the second electrodes.

2. The process kit of claim **1**, wherein the plate is a showerhead assembly.

3. The process kit of claim **1**, wherein the plate is a plasma profile control plate.

4. The process kit of claim **1**,

wherein the cavity in fluid communication with at least one of the apertures.

5. The process kit of claim **1**, wherein the power applied to each of the unit cell is individually controllable relative to the other unit cells.

6. The process kit of claim **1**, further comprising:

a showerhead assembly disposed adjacent the plate.

7. The process kid of claim **6**, wherein the showerhead assembly comprises a plurality of apertures aligning with the apertures formed in the plate.

8. The process kit of claim **1**, further comprising:

a passage formed between each unit cell in the plate.

9. The process kit of claim **1**, further comprising:

a coating formed on the plate.

* * * * *

UNITED STATES PATENT AND TRADEMARK OFFICE

CERTIFICATE OF CORRECTION

PATENT NO. : 9,528,185 B2
APPLICATION NO. : 14/489398
DATED : December 27, 2016
INVENTOR(S) : Sang Ki Nam et al.

It is certified that error appears in the above-identified patent and that said Letters Patent is hereby corrected as shown below:

In the Specification

In Column 2, Line 44, delete “plate:” and insert -- plate; --, therefor.

In Column 4, Line 22, delete “C_1F_6,” and insert -- C_4F_6, --, therefor.

In Column 9, Line 36, delete “I_2,” and insert -- O_2, --, therefor.

In the Claims

In Column 12, Line 22, in Claim 7, delete “kid” and insert -- kit --, therefor.

Signed and Sealed this
Fourteenth Day of March, 2017

Michelle K. Lee

Michelle K. Lee
Director of the United States Patent and Trademark Office