US009534289B2

(12) **United States Patent**
Xue et al.

(10) **Patent No.: US 9,534,289 B2**
(45) **Date of Patent: Jan. 3, 2017**

(54) **PLASMA PROCESS CHAMBERS EMPLOYING DISTRIBUTION GRIDS HAVING FOCUSING SURFACES THEREON ENABLING ANGLED FLUXES TO REACH A SUBSTRATE, AND RELATED METHODS**

(71) Applicant: **Applied Materials, Inc.**, Santa Clara, CA (US)

(72) Inventors: **Jun Xue**, San Jose, CA (US); **Ludovic Godet**, Sunnyvale, CA (US); **Qiwei Liang**, Fremont, CA (US)

(73) Assignee: **APPLIED MATERIALS, INC.**, Santa Clara, CA (US)

(*) Notice: Subject to any disclaimer, the term of this patent is extended or adjusted under 35 U.S.C. 154(b) by 0 days.

(21) Appl. No.: **14/657,405**

(22) Filed: **Mar. 13, 2015**

(65) **Prior Publication Data**

US 2015/0368801 A1 Dec. 24, 2015

Related U.S. Application Data

(60) Provisional application No. 62/013,990, filed on Jun. 18, 2014.

(51) **Int. Cl.**

C23F 1/00	(2006.01)
C23C 16/04	(2006.01)
H01J 37/32	(2006.01)

(52) **U.S. Cl.**

CPC ***C23C 16/045*** (2013.01); ***H01J 37/32357*** (2013.01); ***H01J 37/32422*** (2013.01); ***H01J 37/32449*** (2013.01); ***H01J 37/32633*** (2013.01)

(58) **Field of Classification Search**

CPC H01J 37/32651; H01J 37/32697; H01J 37/32642; H01J 37/32633; H01J 37/32623; H01J 21/311; H01J 21/02513

USPC 156/345.19, 345.3, 345.34, 345.47; 438/709, 710, 717, 731

See application file for complete search history.

(56) **References Cited**

U.S. PATENT DOCUMENTS

7,446,325	B2 *	11/2008	Hwang	H01J 37/32422 250/251
2002/0023831	A1 *	2/2002	Iwase	C23C 14/228 204/192.12
2002/0185229	A1 *	12/2002	Brcka	H01J 37/3244 156/345.48
2004/0137745	A1 *	7/2004	Houghton	H01L 21/02087 438/706

(Continued)

Primary Examiner — Lan Vinh

(74) *Attorney, Agent, or Firm* — Patterson & Sheridan, LLP

(57) **ABSTRACT**

Plasma process chambers employing distribution grids having focusing surfaces thereon enabling angled fluxes to reach a substrate, and associated methods are disclosed. A distribution grid is disposed in a chamber between the plasma and a substrate. The distribution grid includes a first surface facing the substrate and a focusing surface facing the plasma. A passageway extends through the distribution grid, and is sized with a width to prevent the plasma sheath from entering therein. By positioning the focusing surface at an angle other than parallel to the substrate, an ion flux from the plasma may be accelerated across the plasma sheath and particles of the flux pass through the passageway to be incident upon the substrate. In this manner, the angled ion flux may perform thin film deposition and etch processes on sidewalls of features extending orthogonally from or into the substrate, as well as angled implant and surface modification.

20 Claims, 15 Drawing Sheets

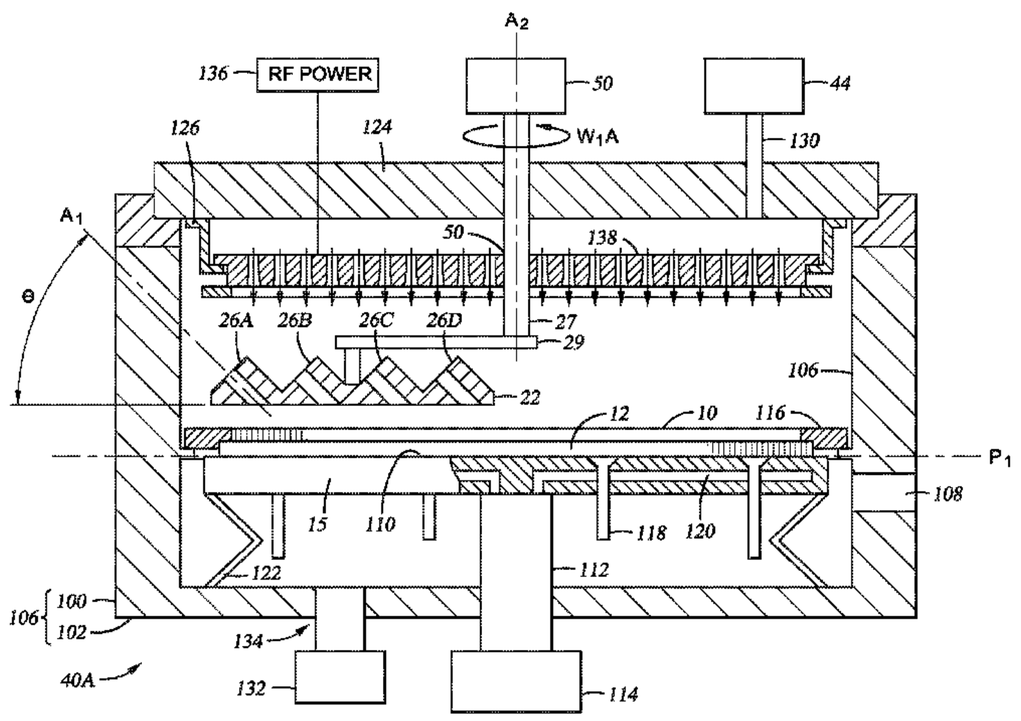

(56) **References Cited**

U.S. PATENT DOCUMENTS

2005/0181617	A1*	8/2005	Bosch	C04B 41/0054 438/710
2006/0163466	A1*	7/2006	Park	H01J 37/026 250/251
2006/0284563	A1*	12/2006	Yoo	H01J 37/321 315/111.61
2007/0158305	A1*	7/2007	Cooke	H01J 37/32633 216/67
2012/0104274	A1*	5/2012	Hirayanagi	B82Y 10/00 250/424

* cited by examiner

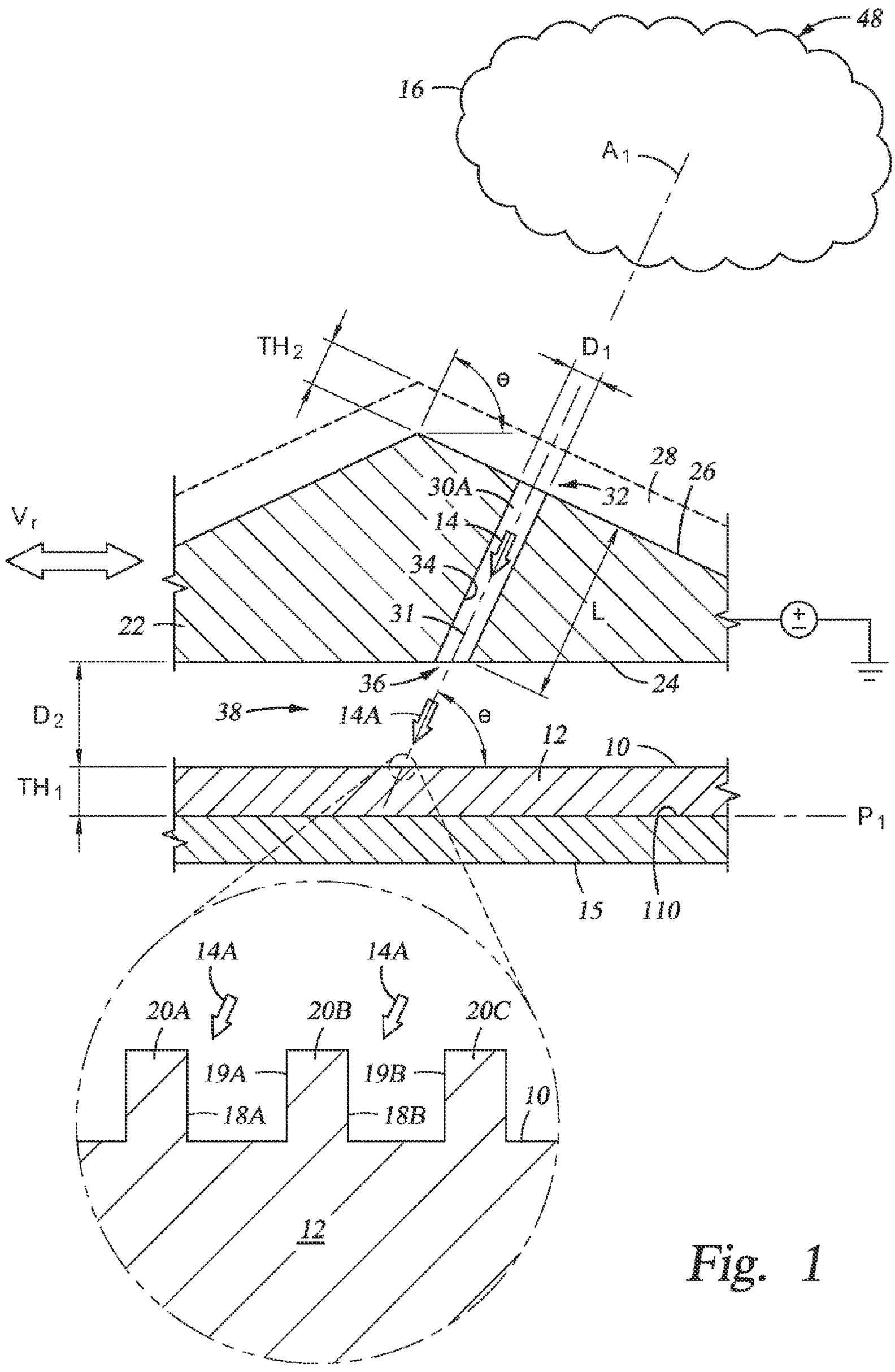
48
16
A1
TH2
D1
θ
28
26
30A
32
14
34
31
22
L
36
24
38
14A
θ
12
10
D2
TH1
P1
15
110
14A
14A
20A
20B
20C
19A
19B
18A
18B
10
12
Vr

Fig. 1

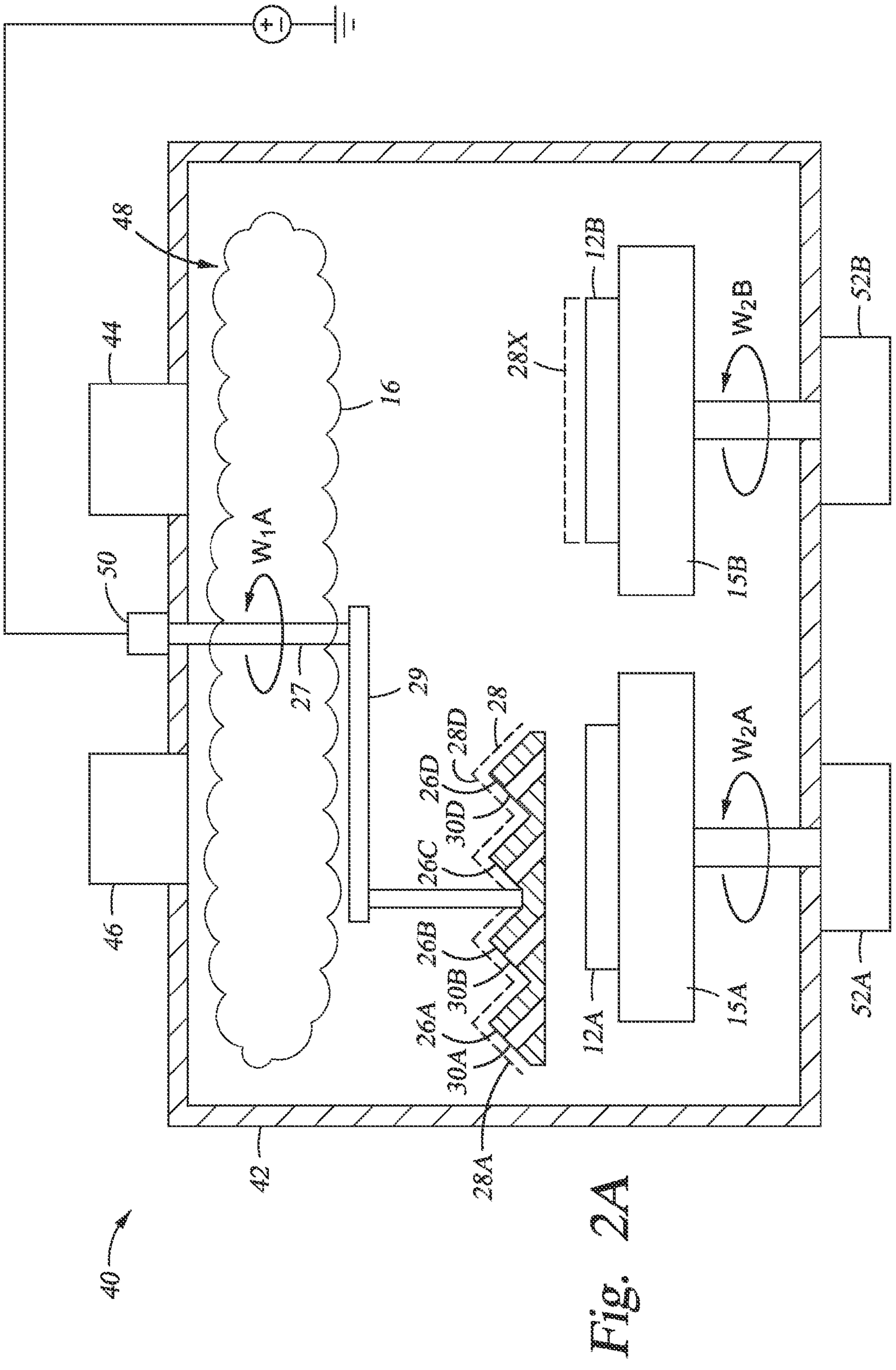
+
-
48
44
50
46
40
42
16
W_1A
27
29
28
26D
28D
30D
26C
26B
30B
26A
30A
28A
28X
12B
W_2B
52B
15B
W_2A
12A
15A
52A

Fig. 2A

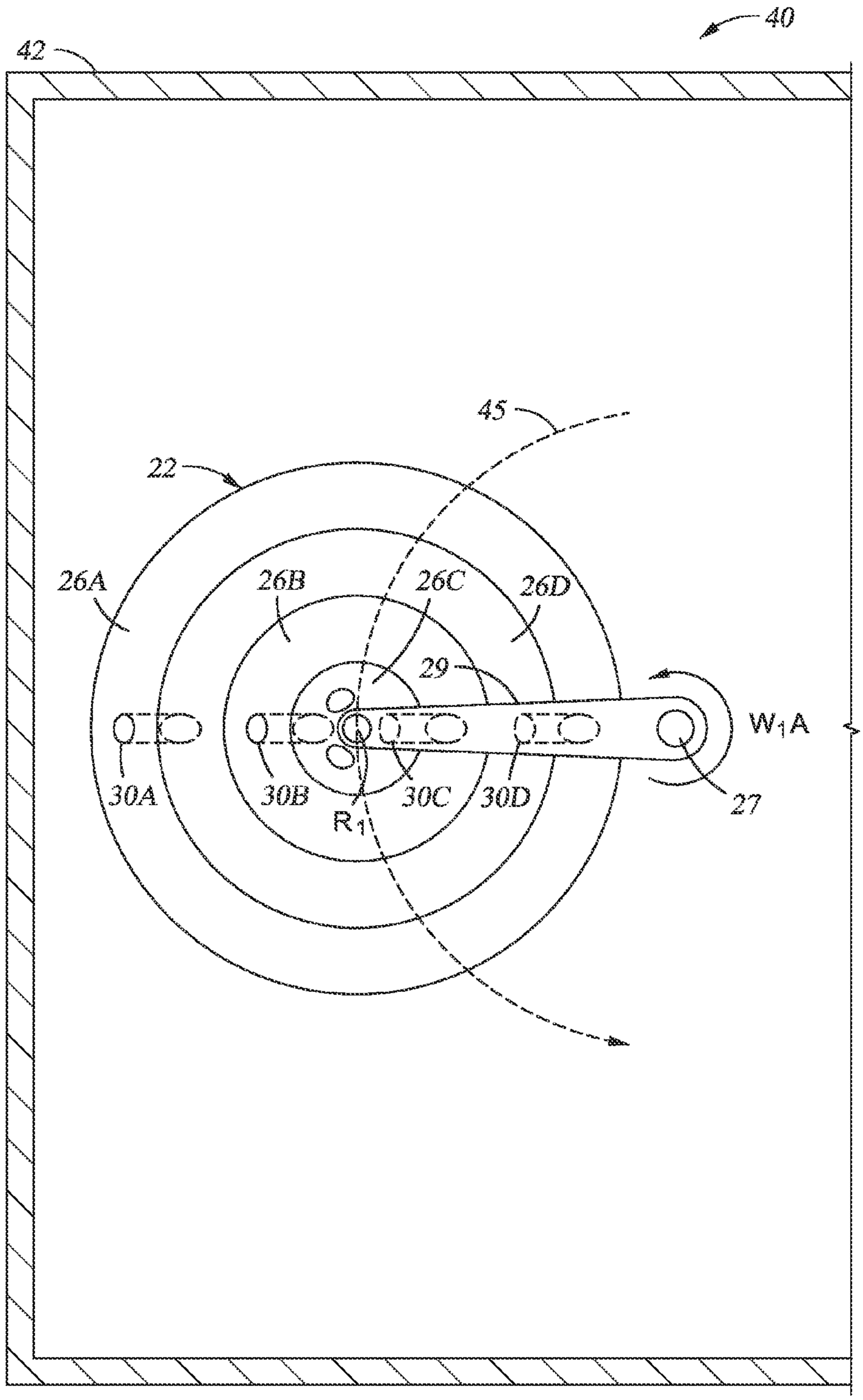

Fig. 2B

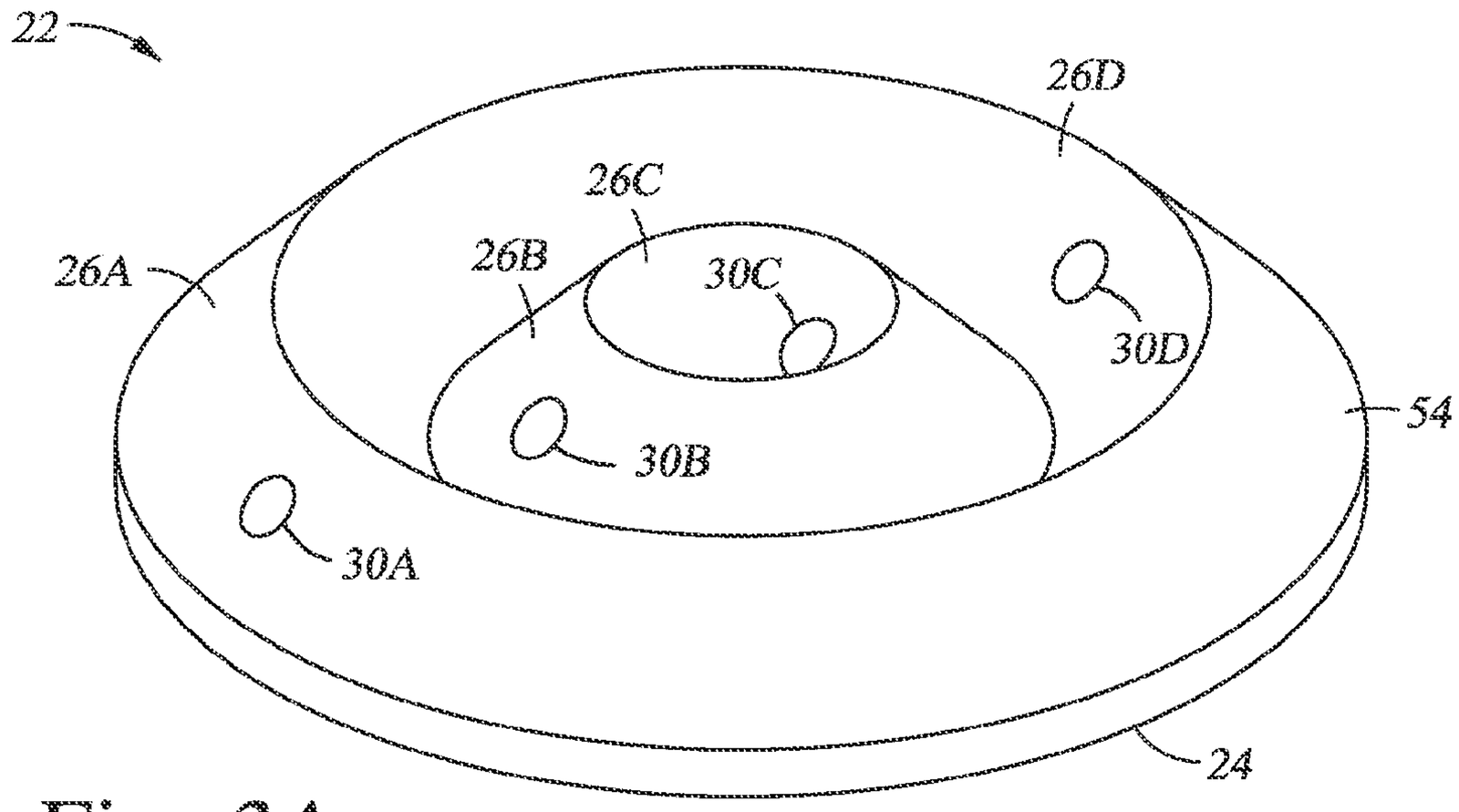
22
26D
26C
26B
26A
30C
30D
30B
30A
54
24

Fig. 3A

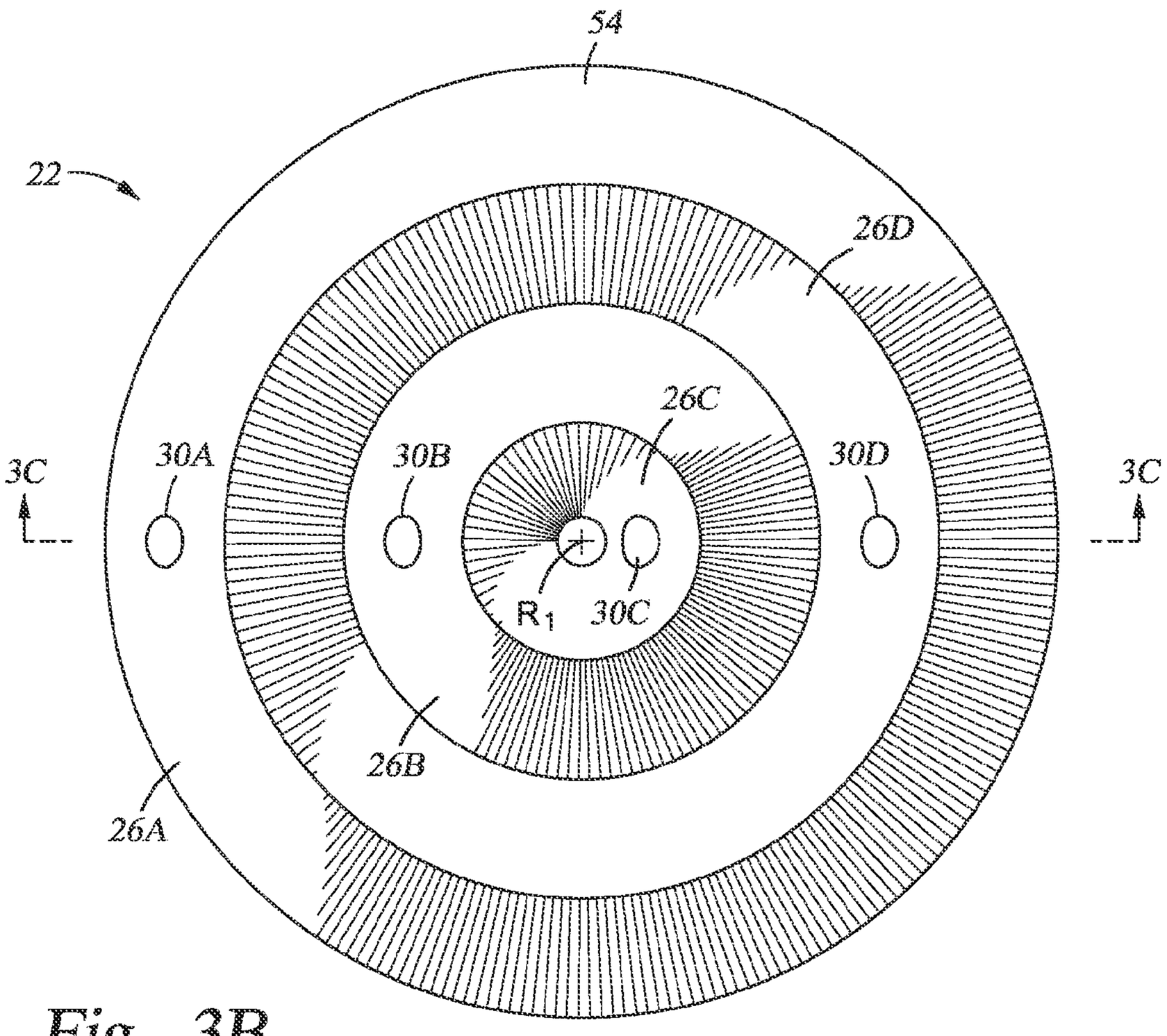
54
22
26D
26C
30A
30B
30D
3C
3C
R1
30C
26B
26A

Fig. 3B

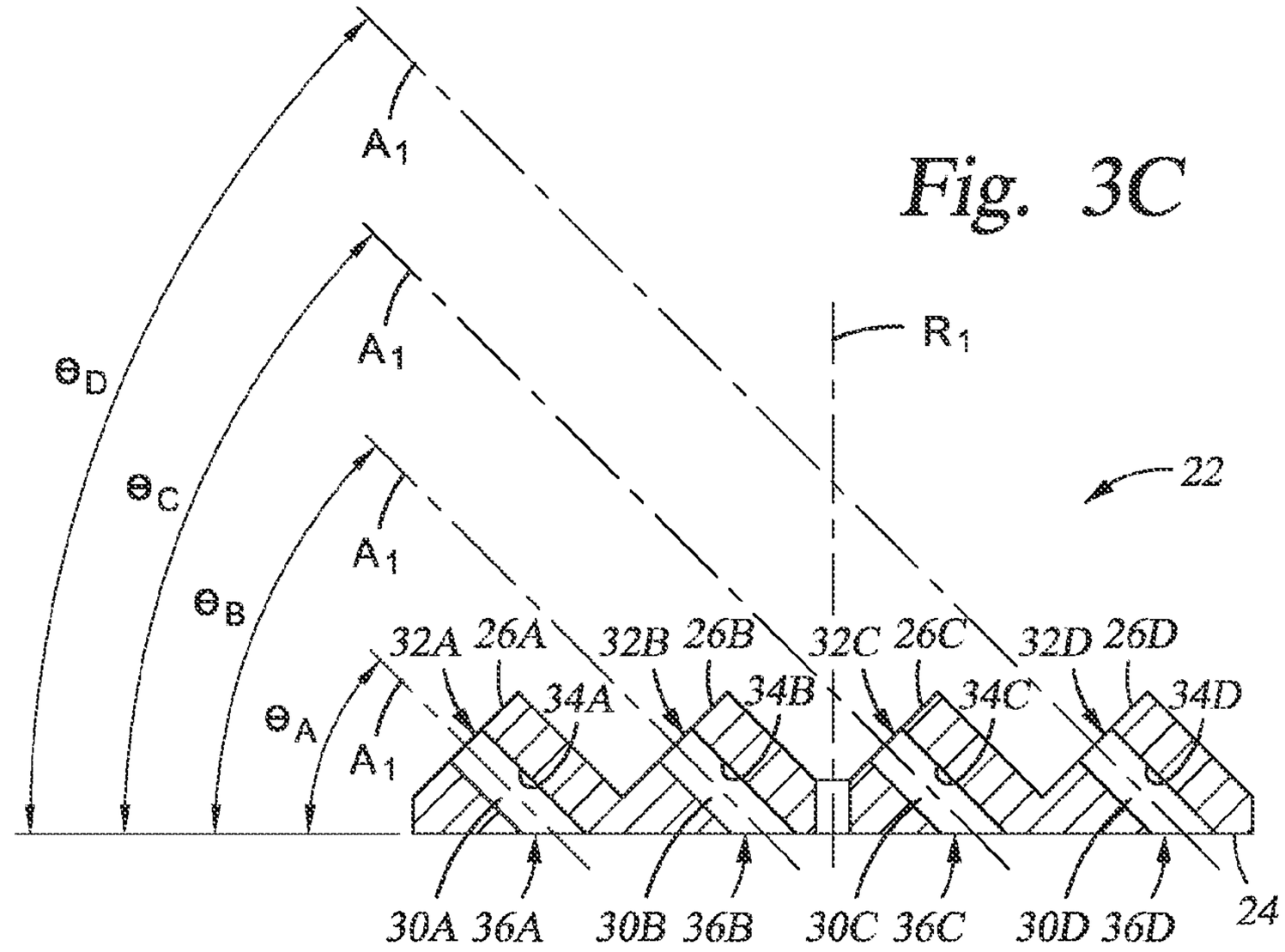
A1
A1
A1
A1
θD
θC
θB
θA
R1
22
32A 26A
32B 26B
32C 26C
32D 26D
34A
34B
34C
34D
30A 36A
30B 36B
30C 36C
30D 36D
24

Fig. 3C

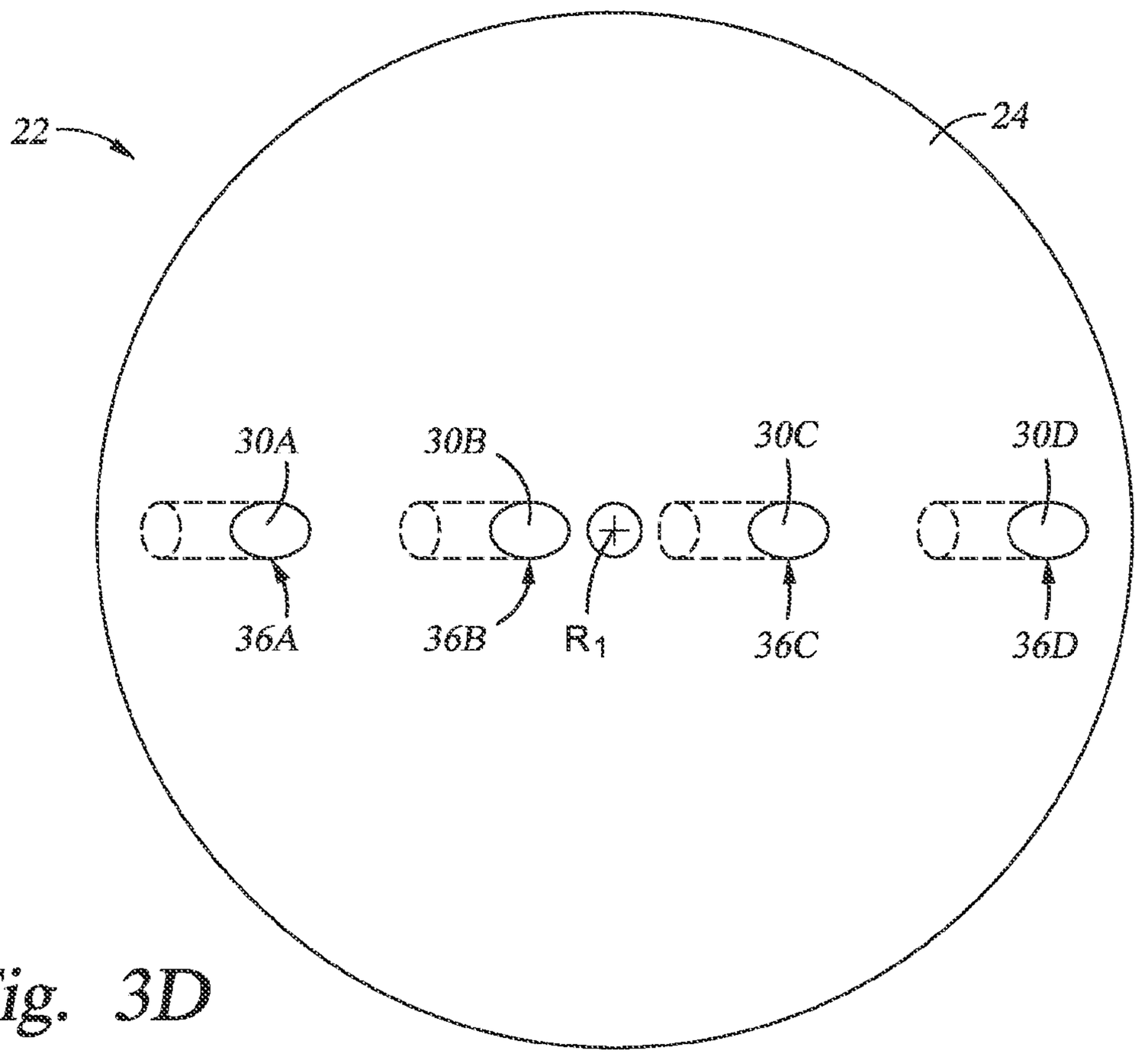
22
24
30A
30B
30C
30D
36A
36B
R1
36C
36D

Fig. 3D

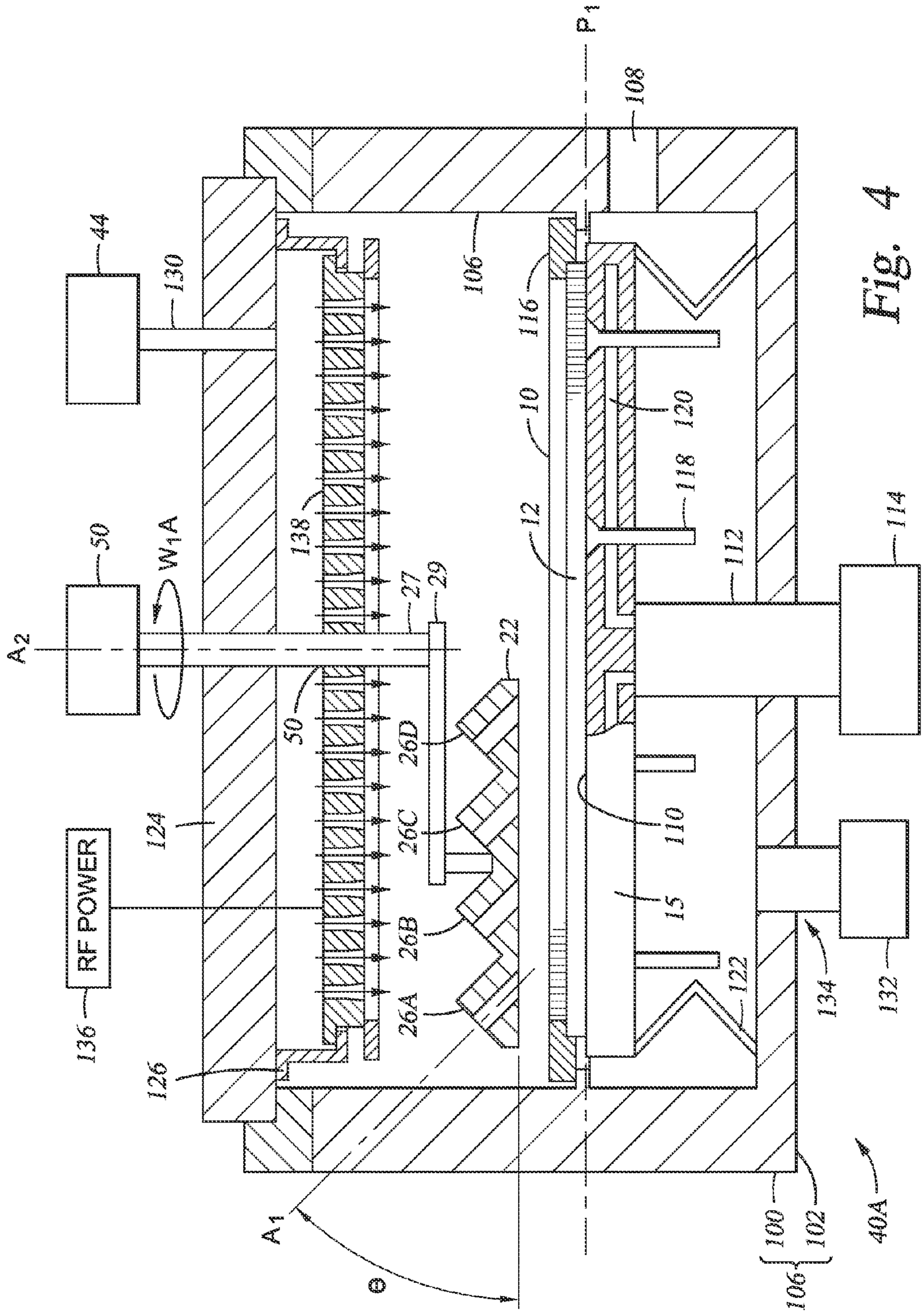
P1
108
44
130
106
116
10
120
118
12
114
112
50
W1A
138
27
29
A2
22
50
26D
124
26C
110
RF POWER
26B
15
26A
122
134
136
126
132
A1
100
102
106
θ
40A

Fig. 4

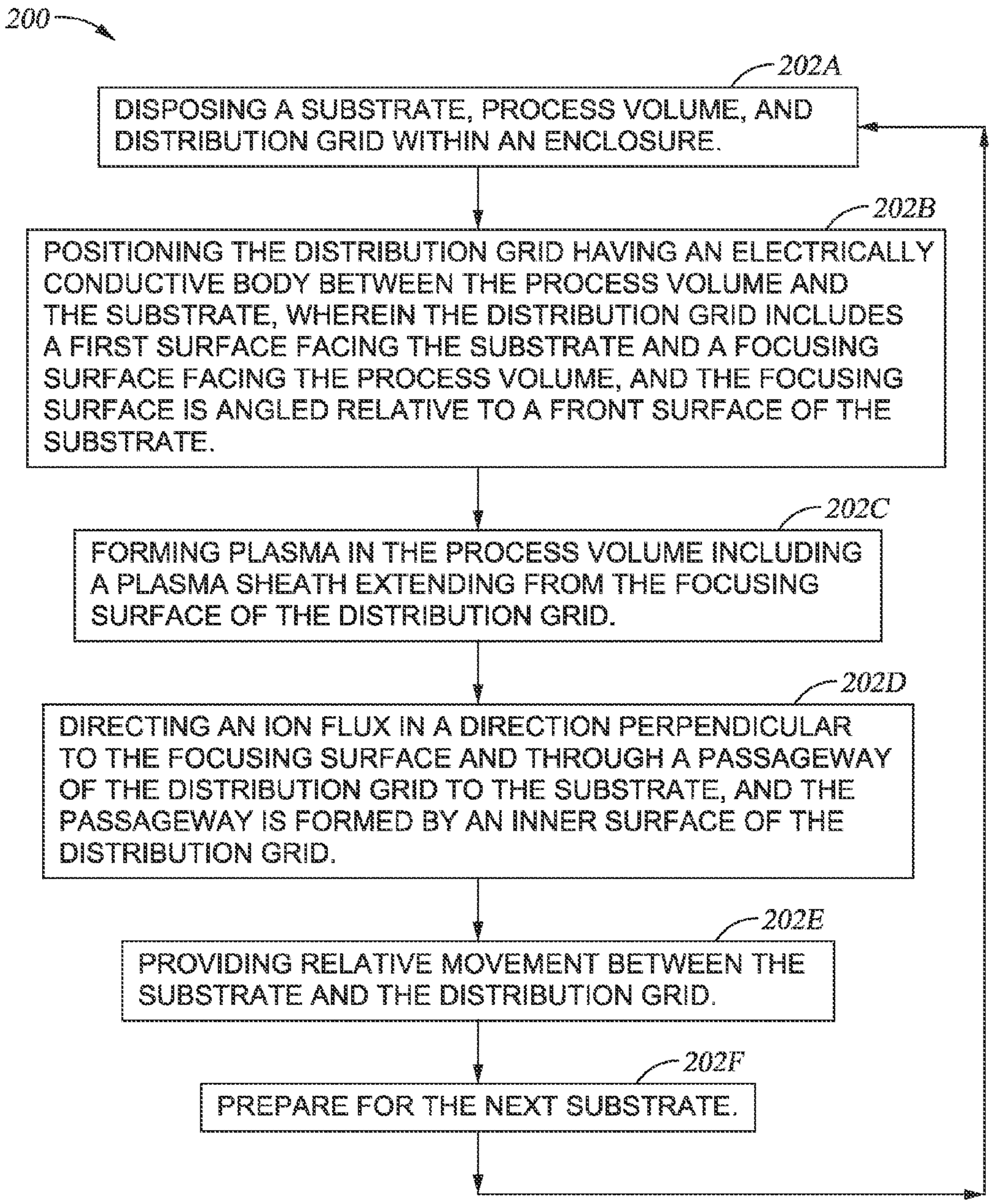
200
202A
DISPOSING A SUBSTRATE, PROCESS VOLUME, AND DISTRIBUTION GRID WITHIN AN ENCLOSURE.
202B
POSITIONING THE DISTRIBUTION GRID HAVING AN ELECTRICALLY CONDUCTIVE BODY BETWEEN THE PROCESS VOLUME AND THE SUBSTRATE, WHEREIN THE DISTRIBUTION GRID INCLUDES A FIRST SURFACE FACING THE SUBSTRATE AND A FOCUSING SURFACE FACING THE PROCESS VOLUME, AND THE FOCUSING SURFACE IS ANGLED RELATIVE TO A FRONT SURFACE OF THE SUBSTRATE.
202C
FORMING PLASMA IN THE PROCESS VOLUME INCLUDING A PLASMA SHEATH EXTENDING FROM THE FOCUSING SURFACE OF THE DISTRIBUTION GRID.
202D
DIRECTING AN ION FLUX IN A DIRECTION PERPENDICULAR TO THE FOCUSING SURFACE AND THROUGH A PASSAGEWAY OF THE DISTRIBUTION GRID TO THE SUBSTRATE, AND THE PASSAGEWAY IS FORMED BY AN INNER SURFACE OF THE DISTRIBUTION GRID.
202E
PROVIDING RELATIVE MOVEMENT BETWEEN THE SUBSTRATE AND THE DISTRIBUTION GRID.
202F
PREPARE FOR THE NEXT SUBSTRATE.

Fig. 5

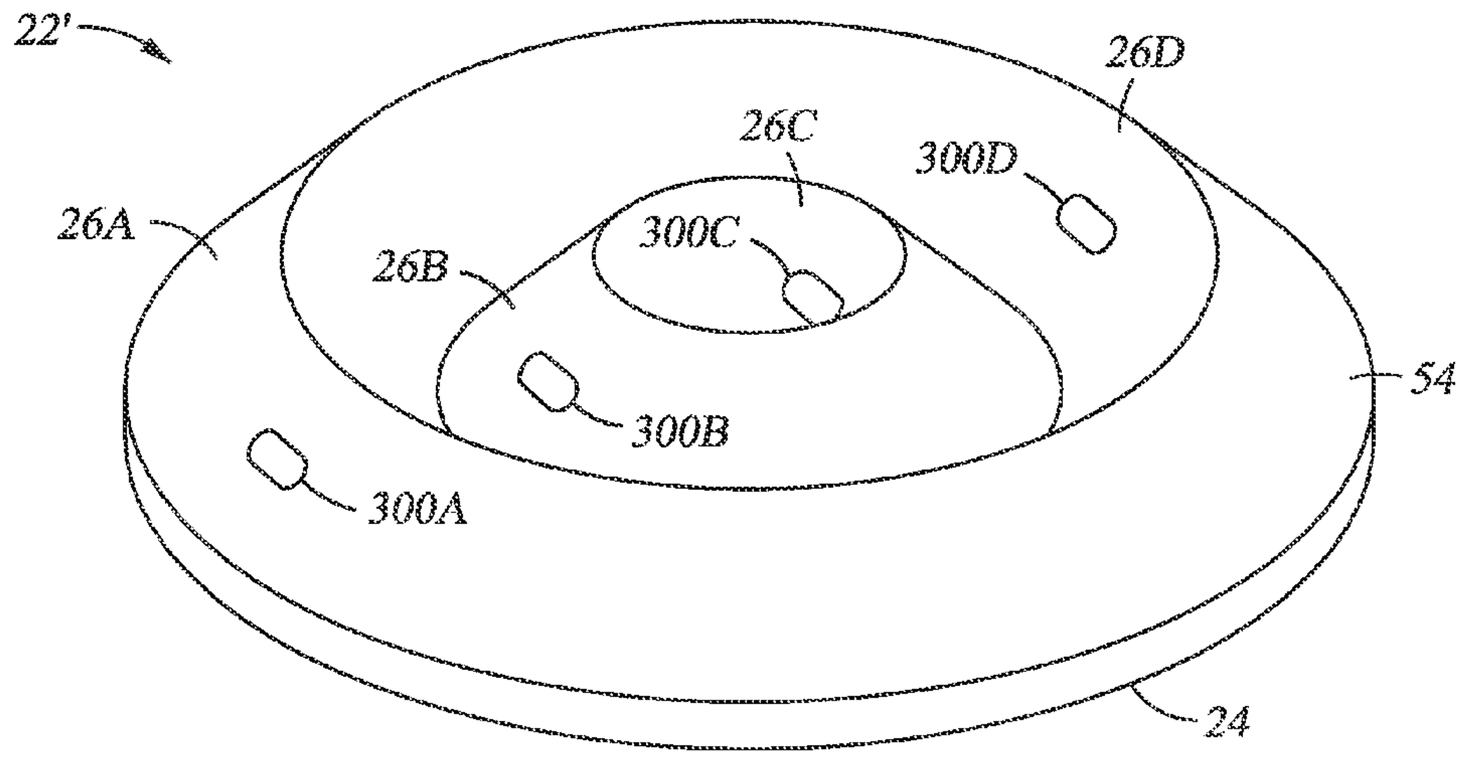
22'
26D
26C
300D
26A
300C
26B
54
300B
300A
24

Fig. 6A

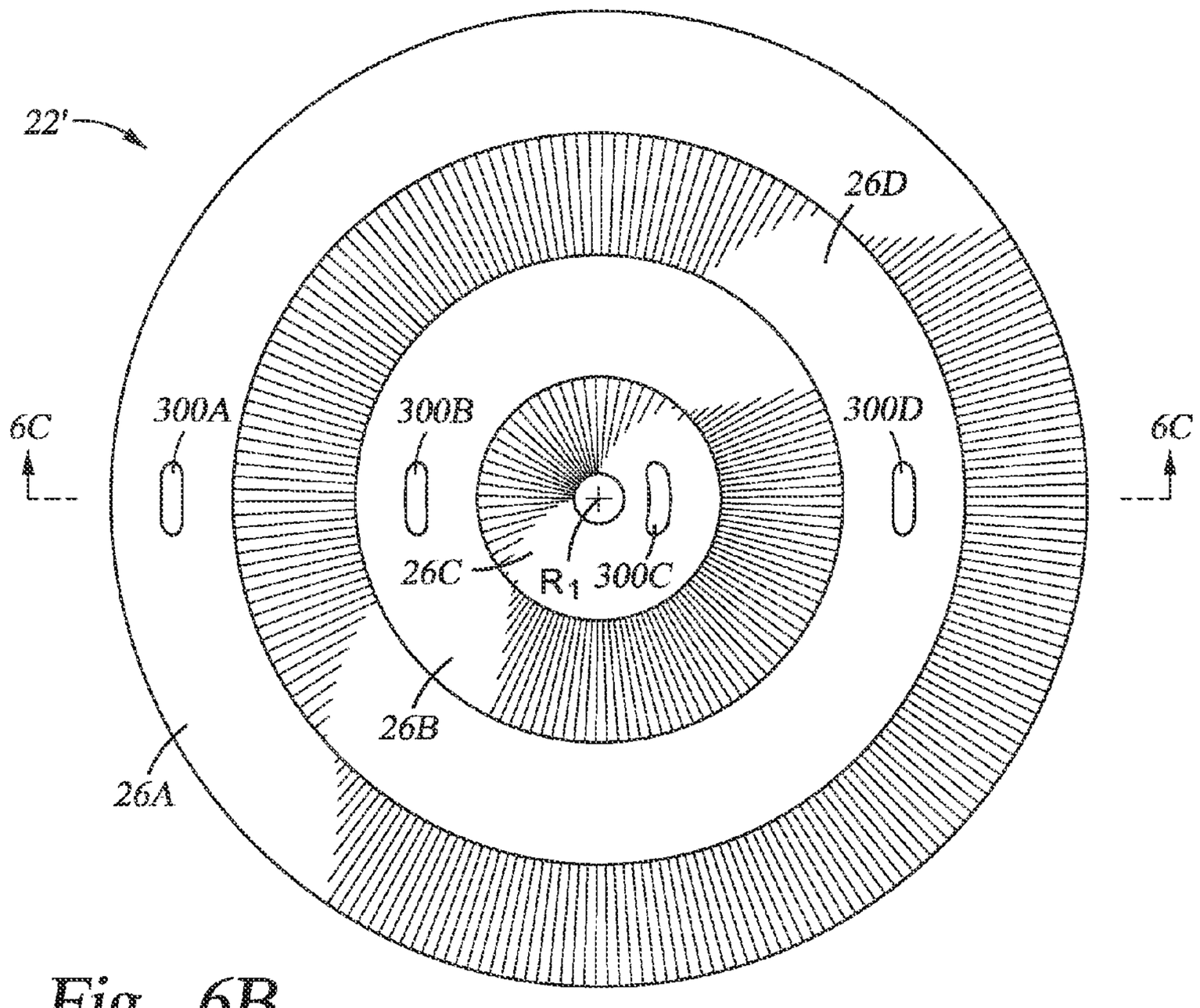
22'
26D
6C
300A
300B
300D
6C
26C
R1
300C
26B
26A

Fig. 6B

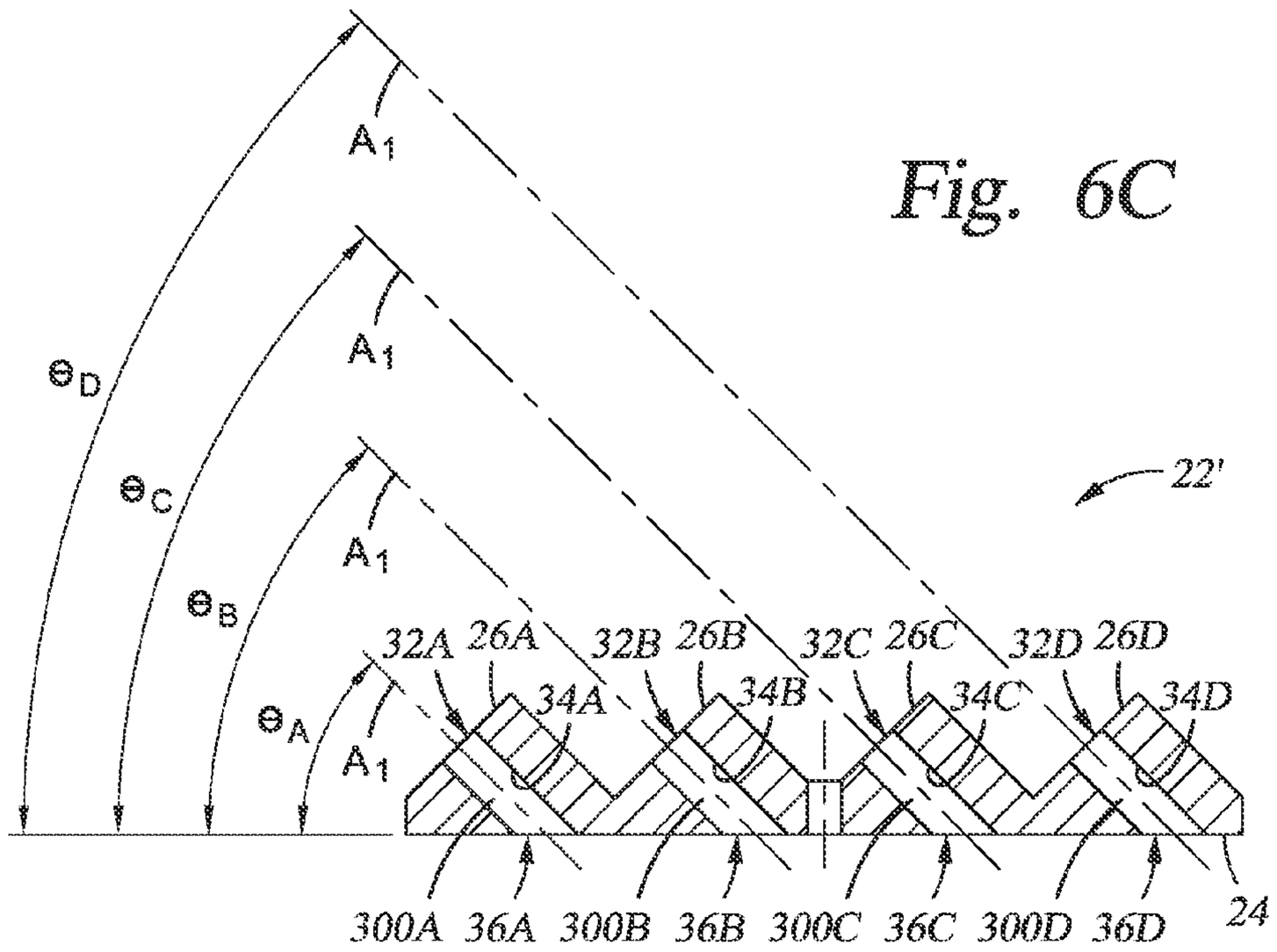
A1
A1
A1
A1
ΘD
ΘC
ΘB
ΘA
22'
32A 26A 32B 26B 32C 26C 32D 26D
34A 34B 34C 34D
300A 36A 300B 36B 300C 36C 300D 36D
24

Fig. 6C

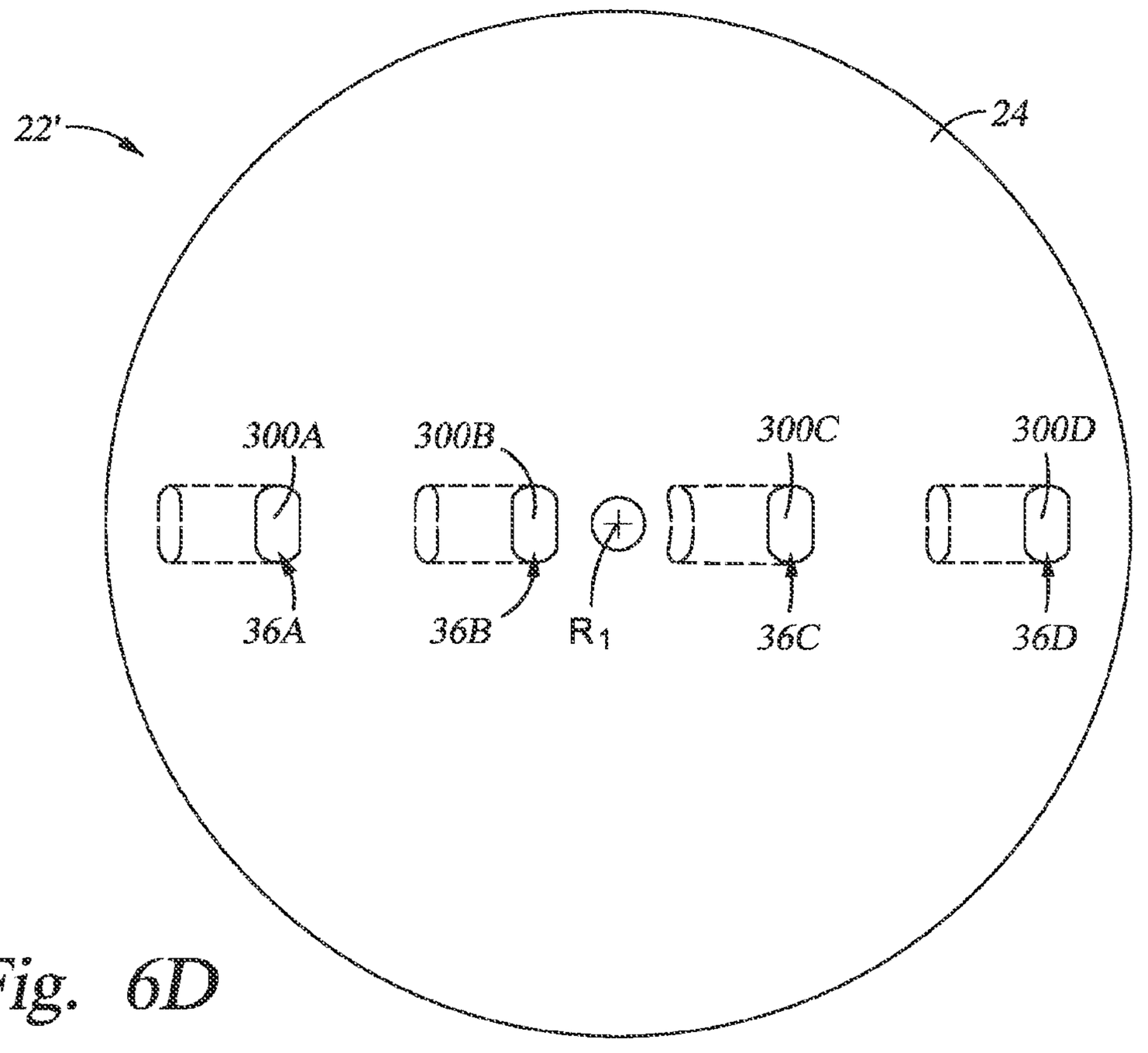
22'
24
300A
300B
300C
300D
36A
36B
R1
36C
36D

Fig. 6D

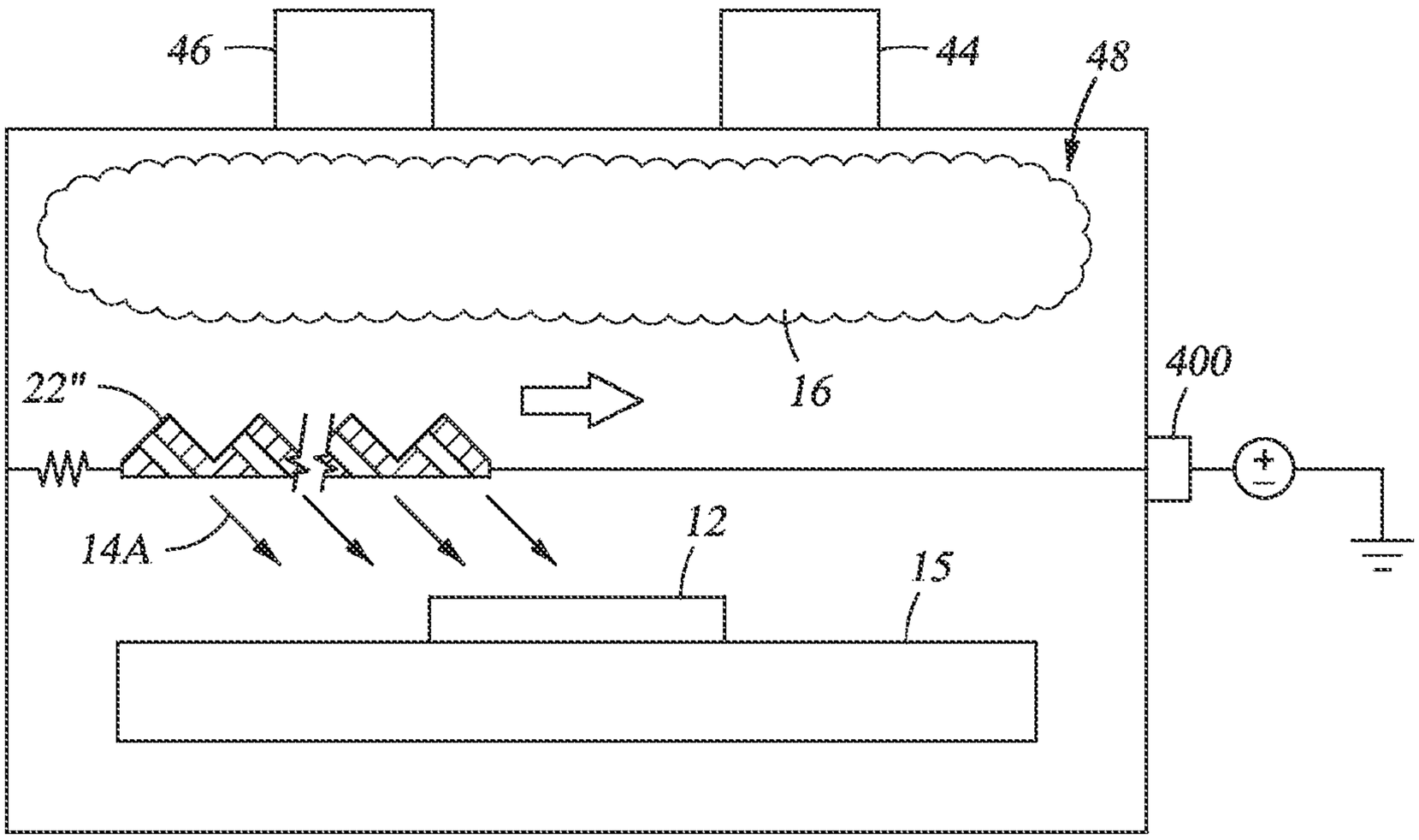

Fig. 7A

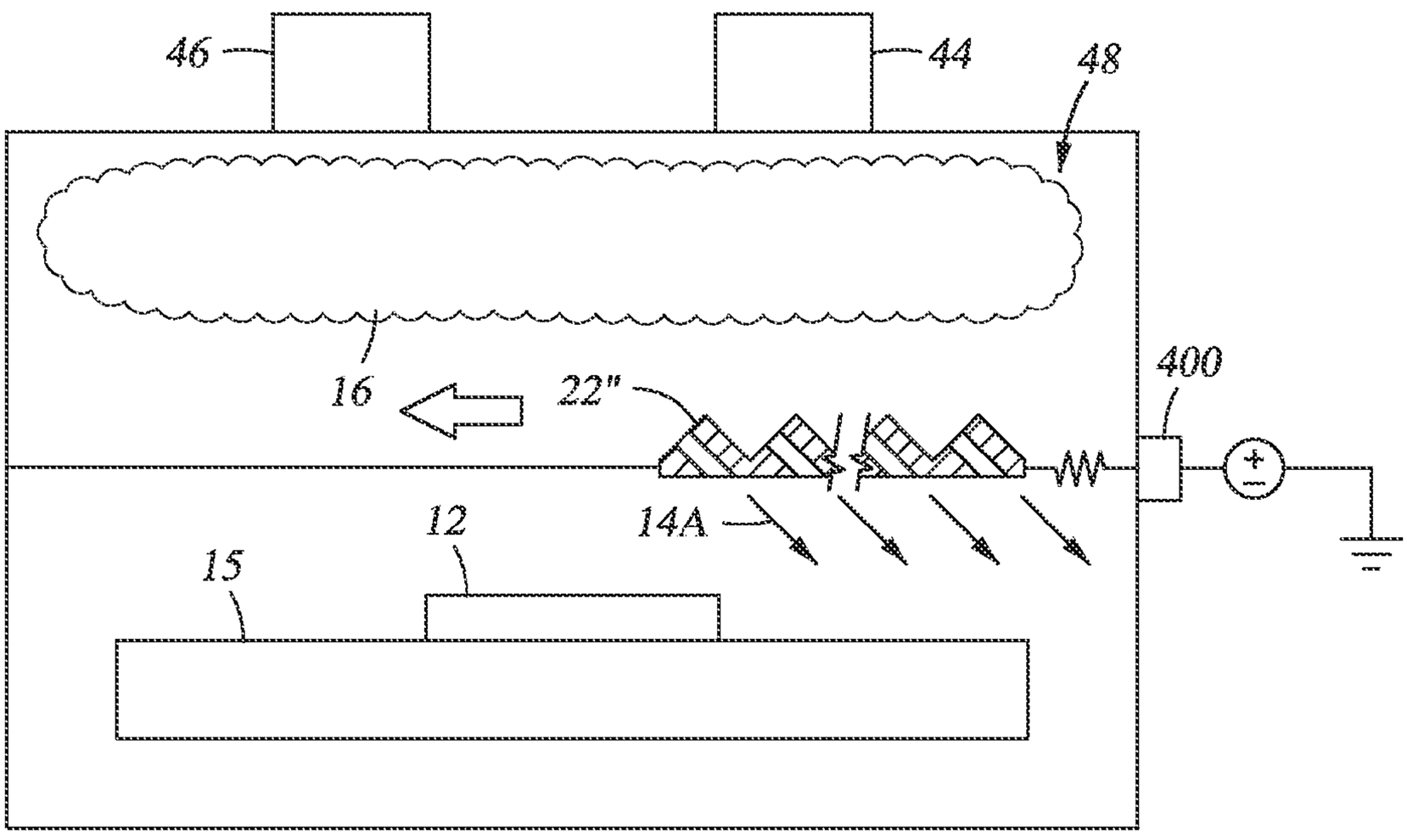

Fig. 7B

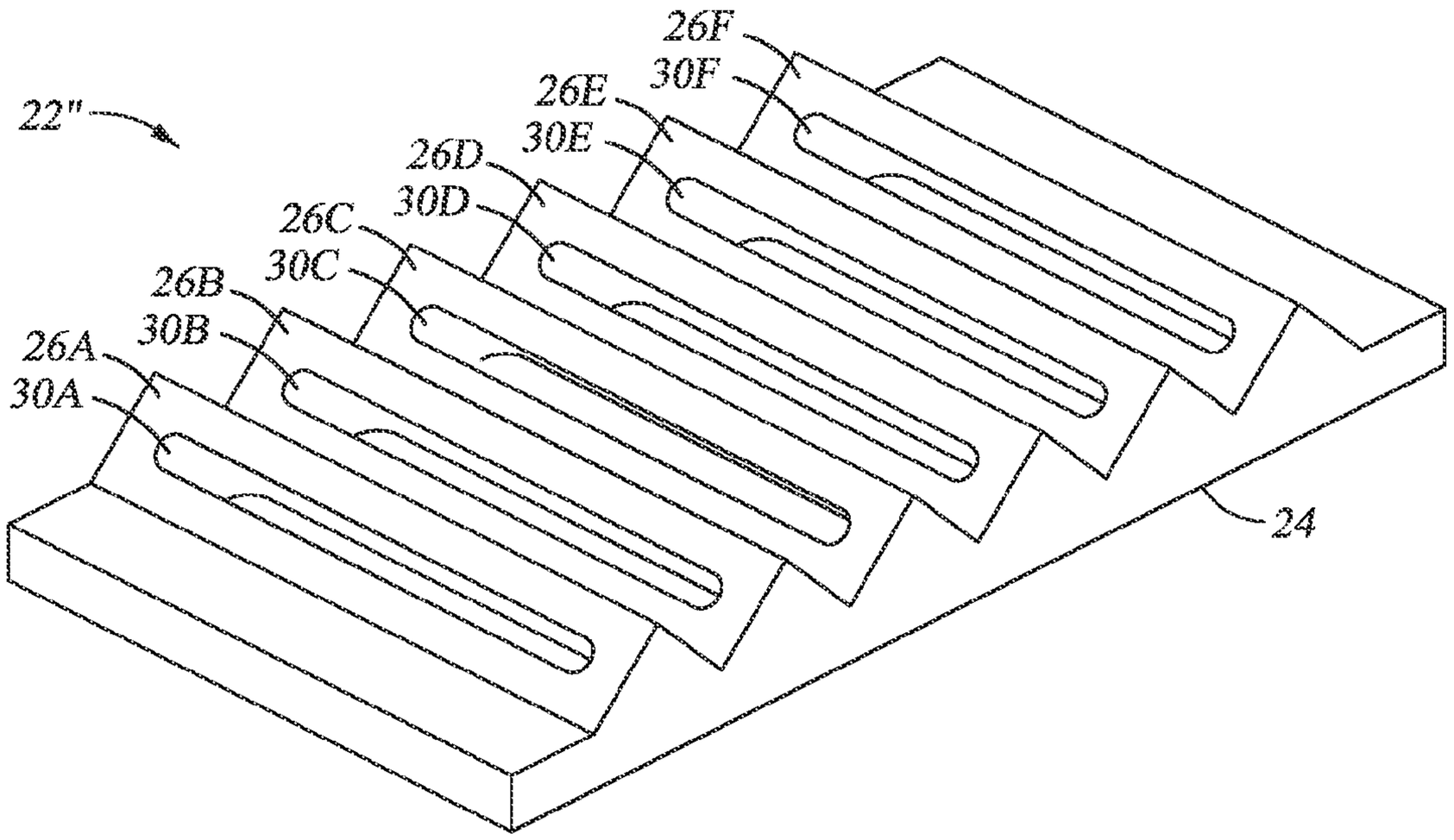
22"
26F
30F
26E
30E
26D
30D
26C
30C
26B
30B
26A
30A
24

Fig. 8A

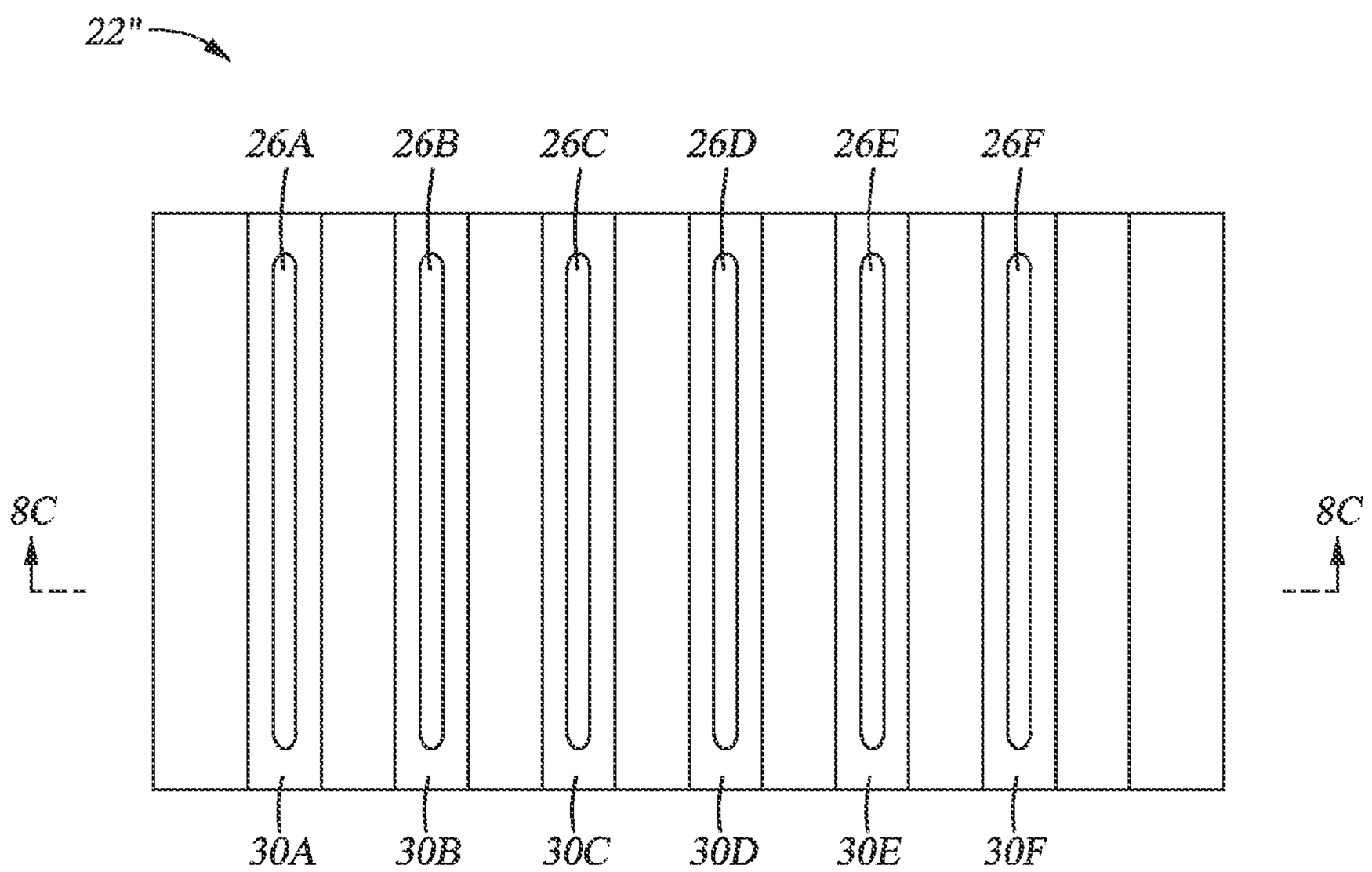
22"
26A
26B
26C
26D
26E
26F
8C
8C
30A
30B
30C
30D
30E
30F

Fig. 8B

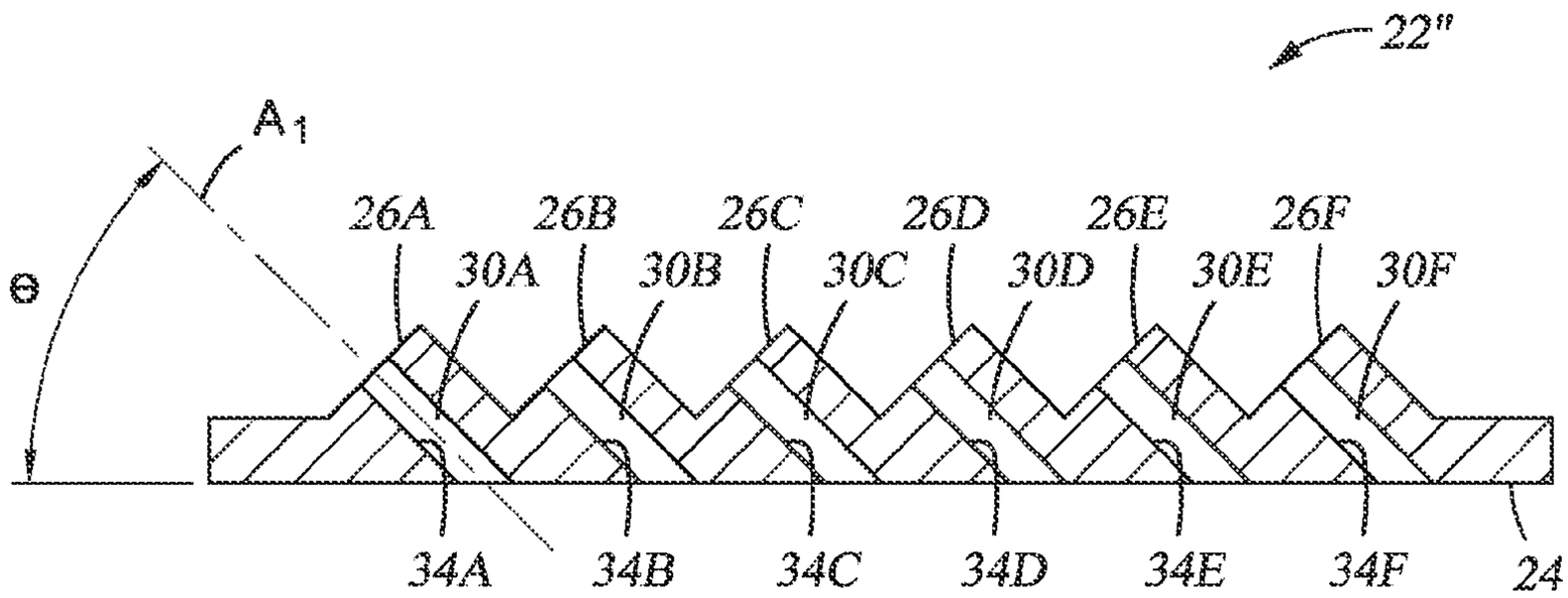
22"
A1
Θ
26A
26B
26C
26D
26E
26F
30A
30B
30C
30D
30E
30F
34A
34B
34C
34D
34E
34F
24

Fig. 8C

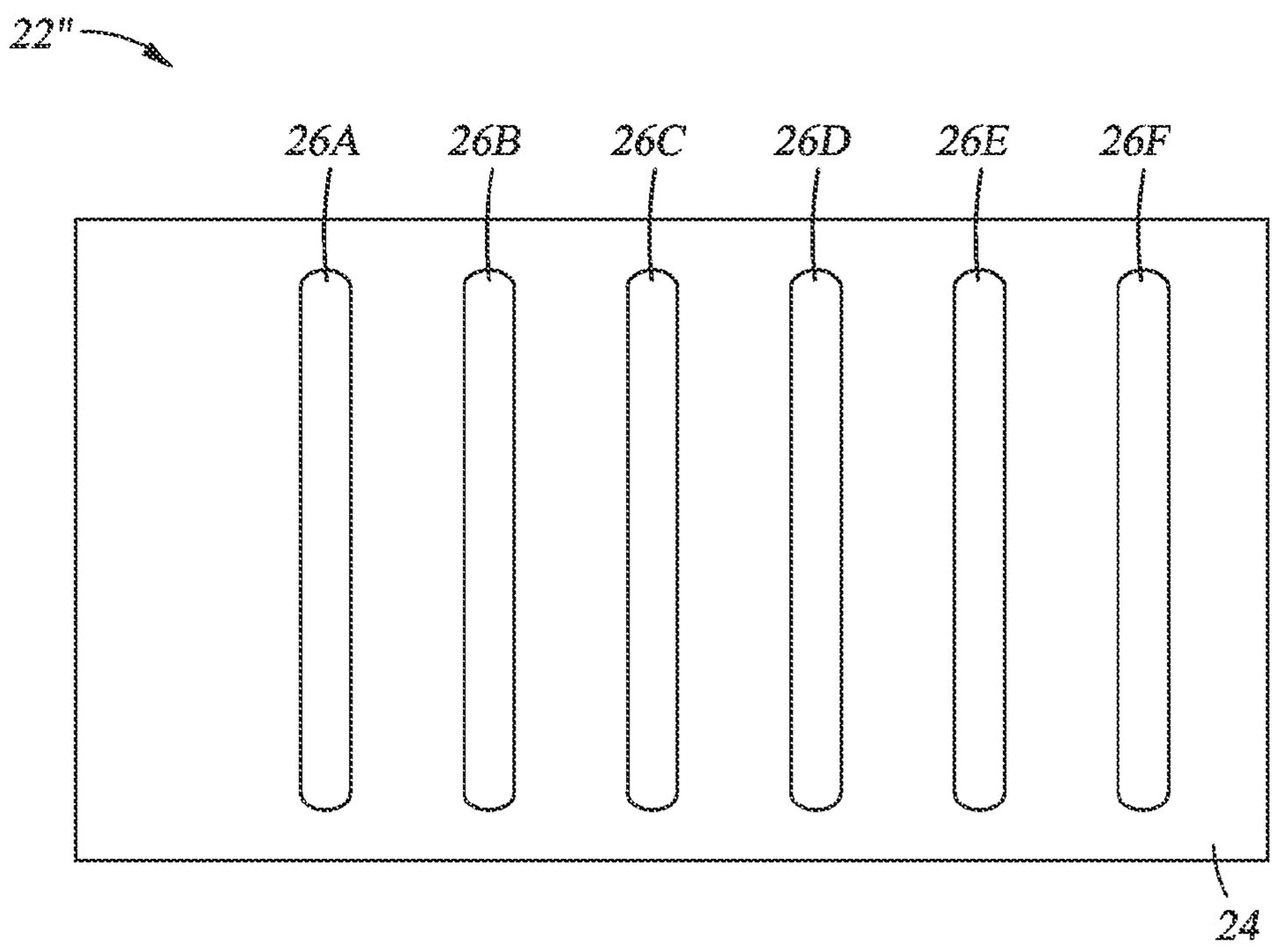
22"
26A
26B
26C
26D
26E
26F
24

Fig. 8D

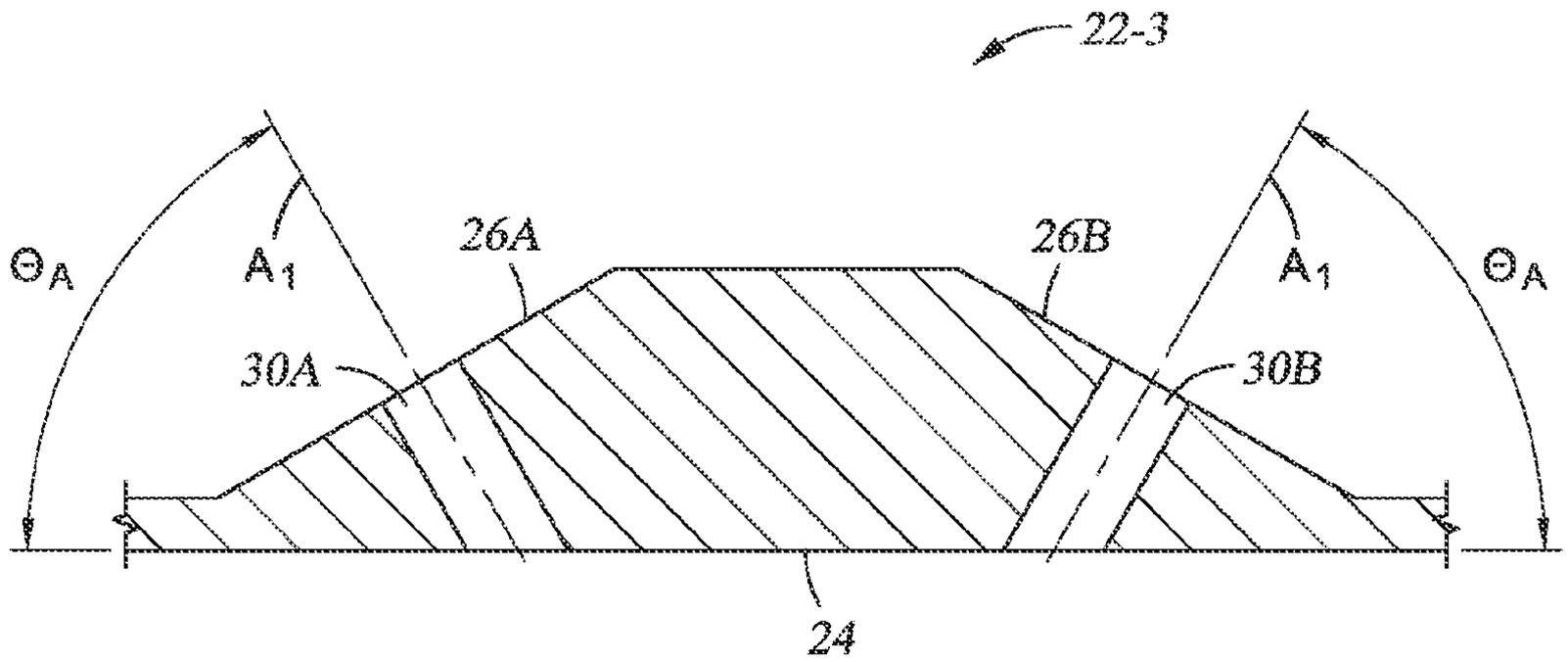
22-3
Θ_A
A_1
26A
26B
A_1
Θ_A
30A
30B
24

Fig. 9A

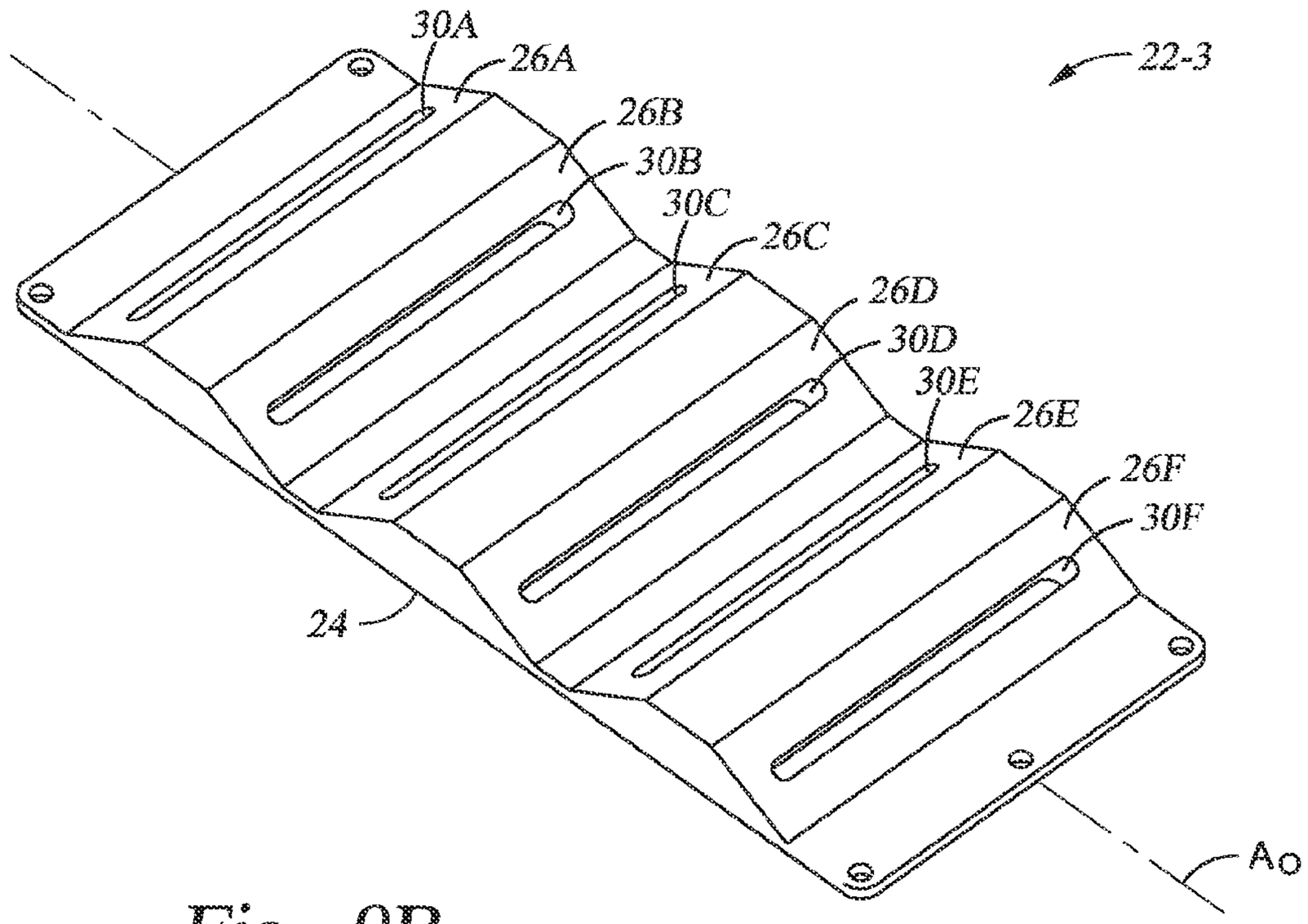
30A
26A
22-3
26B
30B
30C
26C
26D
30D
30E
26E
26F
30F
24
A_O

Fig. 9B

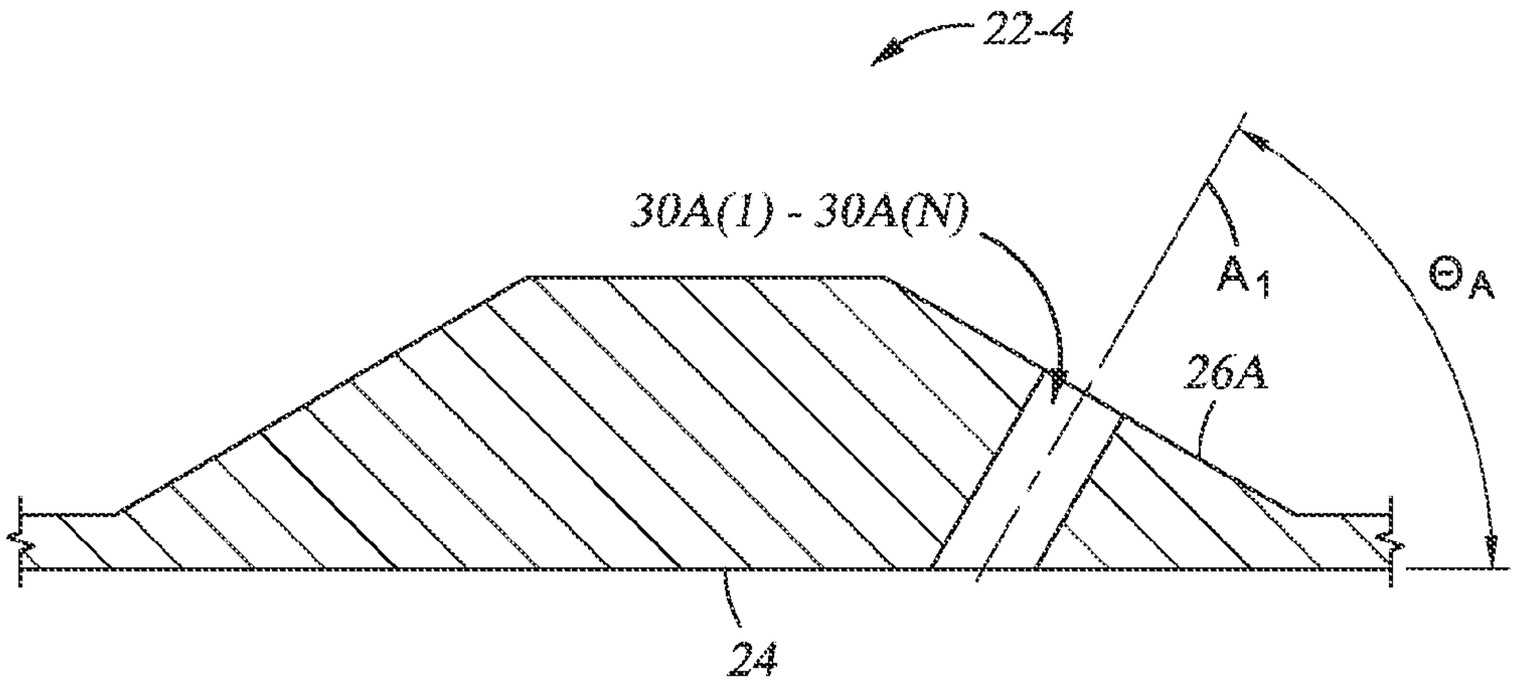

Fig. 10A

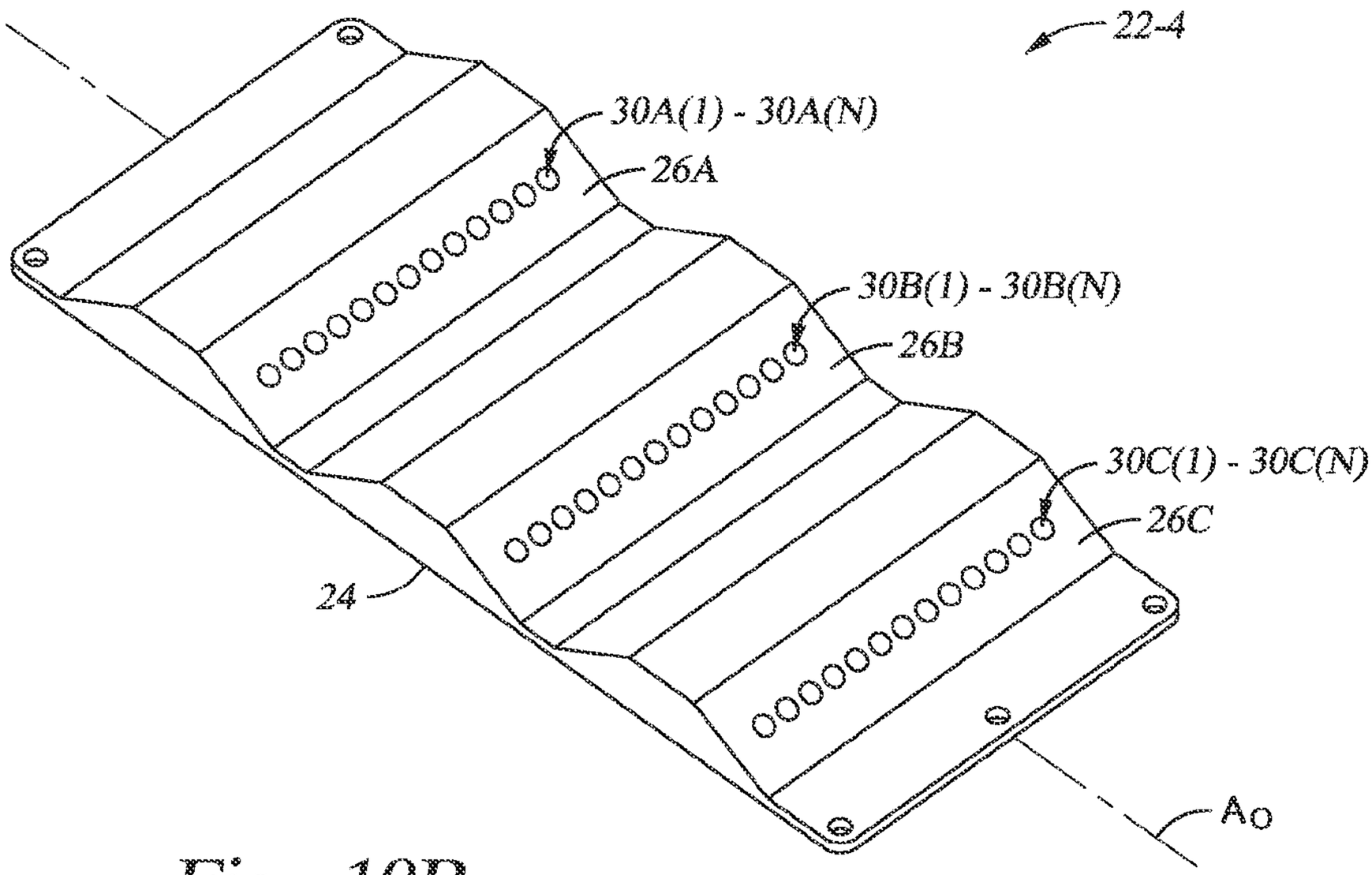

Fig. 10B

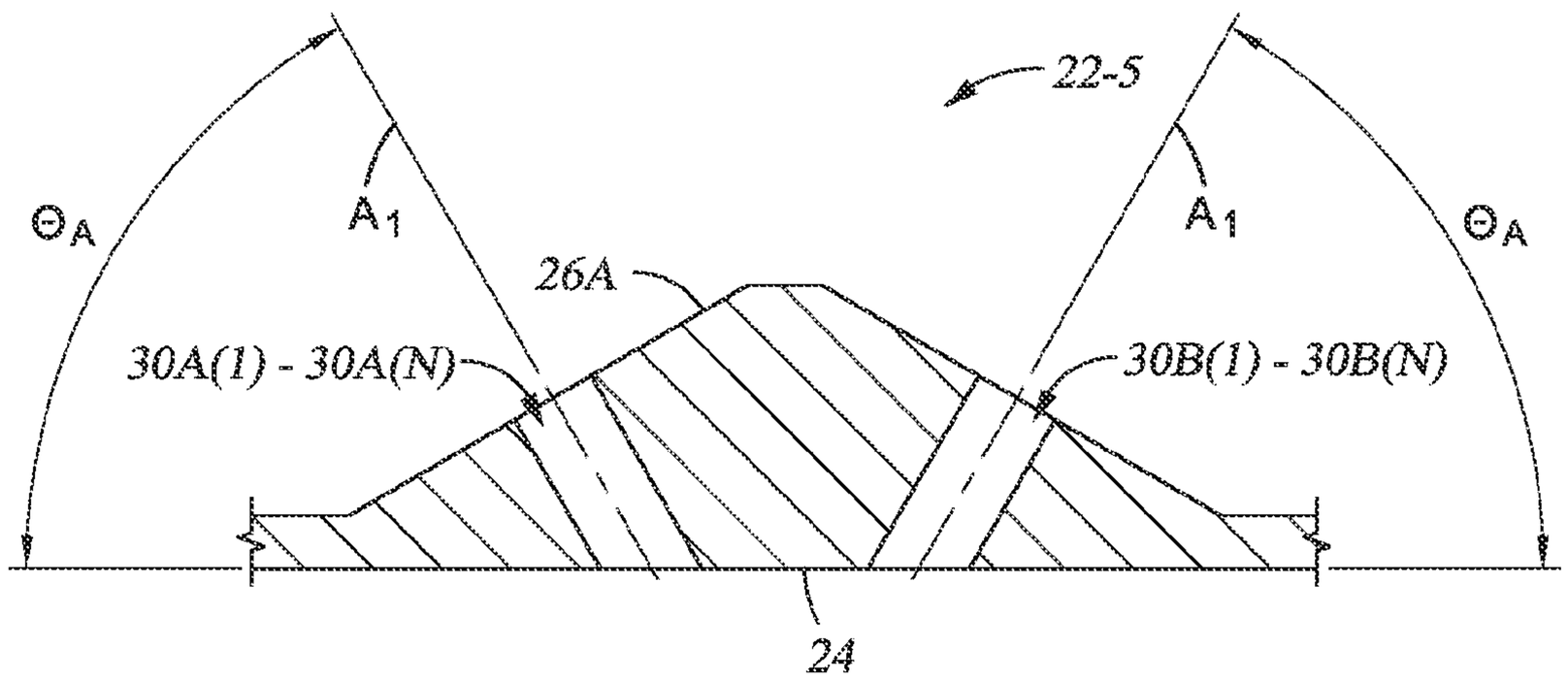

Fig. 11A

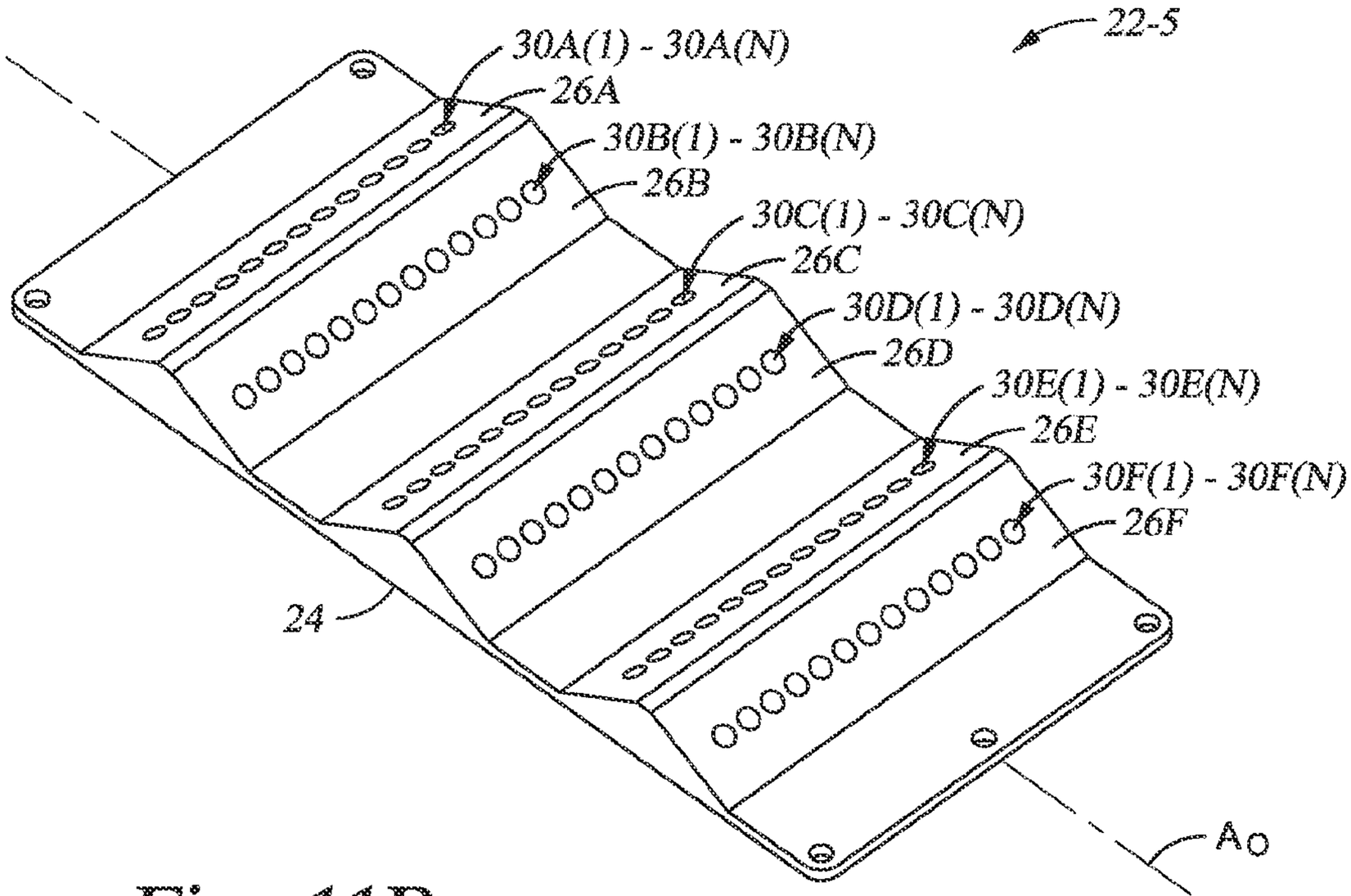

Fig. 11B

PLASMA PROCESS CHAMBERS EMPLOYING DISTRIBUTION GRIDS HAVING FOCUSING SURFACES THEREON ENABLING ANGLED FLUXES TO REACH A SUBSTRATE, AND RELATED METHODS

CROSS-REFERENCE TO RELATED APPLICATION

This application claims the benefit of U.S. Provisional Application Ser. No. 62/013,990 entitled "Plasma Process Chambers Employing Distribution Grids Having Focusing Surfaces Thereon Enabling Angled Fluxes To Reach A Substrate, and Related Methods," and filed Jun. 18, 2014, which is incorporated herein by reference in its entirety.

BACKGROUND

Field

Embodiments of the present disclosure generally relate to apparatuses and methods for plasma processing of substrates for the deposition and etching of film layers thereon, and for implantation or surface modification thereof using a plasma material flux.

Description of the Related Art

A plasma processing device generates plasma in a process chamber, which plasma is useful for performing various operations upon a workpiece disposed within the process chamber. The different operations may include etching, deposition, and/or ion implantation and surface modification processes. These processes may contribute to the fabrication of three-dimensional structures on the workpiece which may form, for example, discrete devices and/or the electrical interconnection circuitry for a device. Examples of three-dimensional structures which may be formed using these plasma processes include trench capacitors and vertical channel transistors, such as FinFETs.

As performance requirements and feature size shrink for semiconductor devices become more challenging, the types of three dimensional structures used in fabricating integrated circuits have generally become more complex and the dimensions of these structures have decreased. When using a plasma to etch, ion implant, and/or perform deposition processes, an ion flux from the plasma is accelerated toward the workpiece on which the semiconductor device is being formed. In conventional plasma processing where the ions are accelerated to the workpiece via a sheath existing between the plasma and the workpiece, the workpiece surface exposed to the ion flux is inherently orientated orthogonal or substantially orthogonal to the trajectory of the ion flux. This orthogonal trajectory may be useful to create, by etching, trenches, vias, contacts and isolation structures into the exposed surface of the substrate, or by depositing material into recessed features of the substrate. However, as the aspect ratios of substrate features extending thereinto or therefrom become larger, the profile of the sidewall of the feature may become difficult to control. For example, during reactive ion etching of a deep trench feature, sputter etching of the trench bottom or base is achieved by the directional flux of ions drawn to the substrate surface across the sheath, and hence into the trench, generally perpendicular to the substrate surface. However, the products of sputter etching of the bottom of the feature will often deposit on the sidewall of the feature where the directional ion flux does not easily reach.

Controlling the wall profile of a feature and the redeposition of sputter etched materials thereon can be accomplished by changing the angular trajectory of the ion flux with respect to the workpiece, and thus sputter etch the redeposited material away and/or directly sputter etch the sidewall with energetic ions. However, the angular trajectory of the ion flux has been difficult to control with precision as conventional methods to control the angular trajectory have been difficult to implement. New approaches are needed to control the trajectory of the ion flux.

SUMMARY

Embodiments disclosed herein include plasma process chambers employing distribution grids having focusing surfaces thereon, which enable ions of the plasma, to reach a substrate surface and the features therein at angles other than perpendicular to the substrate surface, and associated methods. A distribution grid is disposed in a chamber between the plasma and a substrate. The distribution grid includes a first surface facing the substrate and a focusing surface facing the plasma. One or more passageways extend through the distribution grid from the focusing surface to the first surface, wherein the passageways are sized to prevent a plasma sheath formed at the focusing surface from entering into the passageways. By positioning the focusing surface at an angle other than parallel to the substrate, an ion flux from the plasma may be accelerated across the plasma sheath in a direction perpendicular to the focusing surface and thence particles of the ion flux may pass through the passageway to be incident upon the substrate. In this manner, the ion flux may be used to perform thin film deposition and etch processes on sidewalls of features extending orthogonally from or into the substrate, as well as angled implant and surface modification steps.

In one embodiment, a process chamber is disclosed. The process chamber includes an enclosure having a process volume for forming a plasma therein. The process chamber also includes a substrate support disposed within the enclosure for positioning a front surface of a substrate with respect to the plasma. The process chamber also includes a distribution grid disposed between the process volume and the substrate support. The distribution grid includes a first surface facing the substrate support and a focusing surface opposite the first surface. The focusing surface is angled, relative to a plane of the substrate and substrate support, at an angle other than parallel thereto. The distribution grid also includes an inner surface connecting the focusing surface with the first surface. The inner surface forms a passageway having a center axis which is disposed at an angle other than perpendicular to the plane of the substrate. In this manner, sidewalls of features extending from, or into, the surface of the substrate may be subjected to a flux of energetic ions, or radicals or neutrals derived from the ions drawn to the distribution grid.

In another embodiment, a method is disclosed. The method includes disposing a substrate, process volume, and distribution grid within an enclosure. The method also includes positioning the distribution grid having an electrically-conductive body between the process volume and the substrate. The distribution grid includes a first surface facing the substrate and a focusing surface facing the process volume. The focusing surface is angled, relative to a front surface of the substrate, at an angle non-parallel therewith. The method also includes forming a plasma in the process volume, including forming a plasma sheath extending a thickness from the focusing surface of the distribution grid. The method also includes directing a flux of ions in a direction perpendicular to the focusing surface such that a

portion of the ions is accelerated across the plasma sheath and particles of the plasma sheath will enter and pass through a passageway of the distribution grid in the direction of the substrate. In this manner, thin films may be directly deposited, etched, implanted or modified with respect to feature surfaces of the substrate which are parallel to a thickness direction of the substrate.

In yet another embodiment, a distribution grid for a process chamber is disclosed. The distribution grid includes an electrically-conductive body including a first surface and a focusing surface opposite the first surface. The first surface is configured to face a front surface of a substrate. The focusing surface is angled relative to the first surface, i.e., is non-parallel therewith. The distribution grid also includes an inner surface connecting the focusing surface with the first surface, which forms a passageway having a center axis disposed at an angle other than perpendicular to the first surface. In this manner, energetic ions, radicals or neutrals may be drawn through the distribution grid and directed at the substrate at an angle of other than perpendicular to the surface of the substrate to modify the front surface of the substrate, such as by etching or depositing a film layer using the ions, or radicals or neutrals derived from the ions, or to otherwise modify a substrate surface or implant ions thereinto.

Additional features and advantages will be set forth in the detailed description which follows, and in part will be readily apparent to those skilled in the art from that description or recognized by practicing the embodiments as described herein, including the detailed description that follows, the claims, as well as the appended drawings.

It is to be understood that both the foregoing general description and the following detailed description present embodiments, and are intended to provide an overview or framework for understanding the nature and character of the disclosure. The accompanying drawings are included to provide a further understanding, and are incorporated into and constitute a part of this specification. The drawings illustrate various embodiments, and together with the description serve to explain the principles and operation of the concepts disclosed.

BRIEF DESCRIPTION OF THE DRAWINGS

So that the manner in which the above recited features of embodiments of the present disclosure can be understood in detail, a more particular description of embodiments of the disclosure, briefly summarized above, may be had by reference to embodiments, some of which are illustrated in the appended drawings. It is to be noted, however, that the appended drawings illustrate only typical embodiments of this disclosure and are therefore not to be considered limiting of its scope, for embodiments of the disclosure may admit to other equally effective embodiments.

FIG. **1** is a sectional side schematic view of a front surface of an exemplary substrate receiving particles of an angled ion flux accelerated by a plasma sheath formed at a focusing surface of an exemplary distribution grid through a passageway of the distribution grid;

FIG. **2**A is a schematic view of an embodiment of the distribution grid of FIG. **1** as part of an exemplary process chamber providing relative movement between at least one substrate and the distribution grid;

FIG. **2**B is a schematic of the distribution grid of FIG. **2**A showing exemplary relative movement;

FIGS. **3**A through **3**D are a top perspective view, a sectional side view, a top view and a bottom view, respectively, of the distribution grid of FIG. **2**A;

FIG. **4** is a schematic diagram of an exemplary process chamber including the distribution grid of FIG. **2**A;

FIG. **5** is a flow chart diagram of an exemplary method for providing an angled ion flux for the substrate of FIG. **2**A;

FIGS. **6**A through **6**D are a top perspective view, a sectional side view, a top view and a bottom view, respectively, of another embodiment of a distribution grid including passageways including cross-sections having slotted shapes;

FIGS. **7**A and **7**B are side schematic views of another embodiment of a process chamber including relative movement between a distribution grid and a substrate wherein the relative movement is a linear scan;

FIGS. **8**A through **8**D are a top perspective view, a sectional side view, a top view and a bottom view, respectively, of the distribution grid of FIGS. **7**A and **7**B;

FIGS. **9**A and **9**B are a sectional view and a top perspective view of another example of a distribution grid;

FIGS. **10**A and **10**B are a sectional view and a top perspective view of another example of a distribution grid; and

FIGS. **11**A and **11**B are a sectional view and a top perspective view of another example of a distribution grid.

To facilitate understanding, identical reference numerals have been used, where possible, to designate identical elements that are common to the figures. It is contemplated that elements and features of one embodiment may be beneficially incorporated in other embodiments without further recitation.

DETAILED DESCRIPTION

Reference will now be made in detail to the embodiments, examples of which are illustrated in the accompanying drawings, in which some, but not all embodiments are shown. Indeed, the concepts may be embodied in many different forms and should not be construed as limiting herein. Whenever possible, like reference numbers will be used to refer to like components or parts.

Embodiments disclosed herein include plasma process chambers employing distribution grids having focusing surfaces enabling directional ion fluxes directed at the surface of a substrate at an angle other than perpendicular to the substrate surface, and associated methods. In the embodiments, the distribution grid is disposed in a plasma chamber in a location intermediate of the plasma and a substrate located in the chamber. The distribution grid includes a first surface facing the substrate and a focusing surface facing the plasma and the distribution grid is electrically biased to draw ions from the plasma thereto, through a plasma sheath formed on the focusing surface. A passageway extends through the distribution grid from the focusing surface to the first surface, wherein the passageway is sized sufficiently small in cross section, such that the plasma sheath formed on the focusing surface does not extend thereinto. The passageway extends from the focusing surface generally perpendicular thereto, and the focusing surface is positioned non-parallel to the surface of the substrate facing the first surface. By so configuring the focusing surface and passageway relative to the surface of the substrate, a flux of plasma ions may be accelerated perpendicular to the focusing surface and across the plasma sheath formed thereat, and thence particles of the ion flux may pass through the passageway. The particles of the ion flux entering the passageway pass

through the passageway and thence pass to the substrate, at an impact direction other than perpendicular to the surface of the substrate facing the first surface. In this manner, the particles of the angled ion flux may be used to perform thin film processes on sidewalls of features extending from or into the substrate. Given this, it is noted that an increasing portion of the ions of the ion flux entering the passageway may change composition and no longer be ionic, for example through ionic bonding with other matter, combination with electrons, or between ions in the ion flux. In recognition that the "ion flux" may change composition during its trajectory through the passageway of the distribution grid and to the substrate, the terminology of "particles of the ion flux" is used herein for clarity. Accordingly, as particles making up the "ion flux" may change composition, at least some of the particles departing the passageway are identified as being part of the ion flux entering the passageway.

In this regard, FIG. **1** is a sectional side schematic view of a front surface **10** of an exemplary substrate **12** receiving particles **14**A of an ion flux **14** at an angle theta (θ) relative to the front surface **10** of the substrate **12**. The substrate **12** may be a silicon wafer having a diameter of 300 millimeters, a thickness (TH**1**) of about 725 microns, and be supported by a substrate receiving surface **110** of a substrate support **15** which may be disposed opposite the front surface **10** of the substrate **12**. The ion flux **14** includes ions from the plasma **16** generated as part of, for example, a deposition, an etching, and/or a material modification or ion implant process. The particles **14**A of the ion flux **14** will be received at the features of the substrate **12**, including the sidewalls **18**A, **18**B of features **20**A, **20**B which extend from the front surface **10** of the substrate **12**, at an angle other than perpendicular or substantially parallel thereto. It is noted that the features **20**A, **20**B may be part of a semiconductor or nanotechnology device. In this manner, the sidewalls **18**A, **18**B may be more precisely processed to have the characteristics required, for example, through deposition, etching, and ion implantation thereof.

The particles **14**A of the ion flux **14** received at the substrate surface at the angle theta, i.e., at an angle other than generally perpendicular to the front surface **10** of the substrate **12**, are directed to the front surface **10** of the substrate **12** by the distribution grid **22**. To achieve this result, the distribution grid **22** is disposed between the plasma **16** and the substrate **12**. In this regard, the distribution grid **22** includes a first surface **24** facing the substrate **12**, and a focusing surface **26** facing the plasma **16**, wherein the focusing surface **26** is not parallel to the first surface **24**. Additionally, at least the focusing surface **26** is maintained at a negative bias with respect to the plasma **16**. As a result, a plasma sheath **28** is formed at the focusing surface **26**, and the plasma sheath **28** extends a thickness TH**2** from the focusing surface **26**. The thickness TH**2** may be in a range, for example, from one (1) millimeter to nine (9) millimeters, the thickness TH**2** of which is based upon a number of factors, including the bias on the focusing surface **26** and the chamber and/or the plasma **16** pressure. Positive ions of the plasma **16** are resultantly accelerated along a direction A_1 normal to the focusing surface **26** when encountering the plasma sheath **28** extending from the focusing surface **26**. The distribution grid **22** includes at least one passageway **30**A which is sized with a width D**1** to prevent the plasma sheath **28** from entering the passageway **30**A. In one case, the width D**1** may be in a range from five-hundred (500) microns to five (5) millimeters and be equal to or less than the thickness TH**2** of the plasma sheath **28**. Because the ions from the plasma **16** are accelerated along the direction A_1 normal to the focusing surface **26**, the portion of these positively charged ions not impacting the focusing surface **26** may enter an entry opening **32** of the passageway **30**A at the focusing surface **26**. The passageway **30**A is formed by an inner surface **34** of the distribution grid **22** which extends from the focusing surface **26** to the first surface **24** to form the passageway wall, such that the passageway **30**A has a central axis **31** extending generally normal (perpendicular) to the focusing surface **26** and parallel to direction A_1, and the central axis **31** is thus generally parallel to the direction by which the ions flux **14** is drawn across the plasma sheath **28**. Accordingly, once accelerated across the plasma sheath **28** and then into the passageway **30**A, the particles **14**A of the ion flux **14** can travel the length L of the passageway **30**A and depart the passageway **30**A at the exit opening **36** of the passageway **30**A located at the first surface **24**. The particles **14**A of the ion flux **14** departing the passageway **30**A continue ballistically in the direction A_1 until received at the substrate **12**. In this manner, the sidewalls **18**A, **18**B of the features **20**A, **20**B are exposed to the particles **14**A of the ion flux **14** at an angle other than generally parallel thereto. The ions may convert, during or after passing through the passageway, to radicals or neutrals, but the kinetic energy thereof created by acceleration of the ion across the plasma sheath **28** remains in the moving neutral or radical. As a result, where the particles **14**A of the ion flux **14** are an etchant, the sidewalls **18**A, **18**B, or re-deposited material thereon, may be etched away. Where the particles **14**A of the ion flux **14** are, for example, a deposition material flux, the particles **14**A of the ion flux **14** will deposit on the sidewalls **18**A, B. Where the particles **14**A of the ion flux **14** are for example a material modification or implanting flux, the ions can penetrate inwardly of the sidewall surfaces to change a property of the sidewall of the surface material. For example, a flux of carbon ions drawn from a methane plasma impacting a silicon feature sidewall **18**A, **18**B, will result in the forming of a silicon carbide layer extending inwardly of the sidewall **18**A, **18**B. Where the particles **14**A of the ion flux **14** are an etchant flux, sidewalls of the feature at which the flux is directed can be reactive ion etched or sputter etched, and re-deposited etch products may be removed therefrom. Where the particles **14**A of the ion flux **14** are a deposition flux, the deposition material is directed at a sidewall, and will preferentially stick thereto to build up a film layer thereon. In each case, the substrate **12** need not be biased, as the directionality of the flux **14** is provided by the grid **22**, and by the angling of a plasma sheath **28** on the focusing surface **26** in a direction non-parallel to the front surface **10** of the substrate **12** or in a direction non-parallel to a plane P**1** of a substrate receiving surface **110** of the substrate support **15**. Thus, a flux of deposition, etch, implant or modification species is directed at the substrate, and the kinetic energy of the flux is decoupled from the bias of the substrate.

With continuing reference to FIG. **1**, portions of the front surface **10** of the substrate **12** disposed in the path of the particles **14**A of the ion flux **14** departing from the passageway **30**A receive the particles **14**A of the ion flux **14**. Other portions of the front surface **10** which are not in the path of the passageway **30**A will not receive the particles **14**A of the ion flux **14**. To achieve uniform exposure of the front surface **10** of the substrate **12** to the angled flux of the particles **14**A, relative movement Vr between the distribution grid **22** and the substrate **12** is provided. In some cases, relative movement may be provided by moving the distribution grid **22** and/or the substrate **12** without changing the angular align-

ment therebetween. The relative movement may be rotational, linear translation (or scanning), orbital, or combinations thereof, such as planetary motion. It is also noted that translation alone will result in isotropic processing of the front surface **10** of the substrate **12**, as all ions in the flux would reach the front surface **10** of the substrate **12** from the same general direction if the passageways **30**A in the distribution grid **22** all have the same orientation. Simple rotation of the substrate or the distribution grid **22** may likewise result in isotropic processing of the substrate surface centered around the axis of rotation where the passageways **30**A in the distribution grid **22** all have the same orientation, because the particles **14**A of the ion flux **14** will travel in the same general direction with respect to the center of rotation of the substrate **12** or grid **22**. Movement of both the substrate **12** and the grid **22** in rotational and linear direction can be employed to provide an anisotropic flux reaching the individual substrate features **20**A, **20**B, etc. Additionally, the grid **22** may include a multifaceted focusing surface, such that different portions of the focusing surface **26** are disposed at different angles, and thus different directions of orientation, with respect to the first surface **24** of the grid **22** are provided. As a result, a plurality of flux angles, relative to the front surface **10** of the substrate, can be achieved.

With continued reference to FIG. **1**, the first surface **24** includes the exit opening **36** from which the particles **14**A of the ion flux **14** depart the passageway **30**A. The first surface **24** may include a shape, in some cases planar, configured to minimize an interstitial gap **38** of a distance D**2** between the distribution grid **22** and the substrate **12**. Minimizing the distance D**2** of the interstitial gap **38** minimizes an opportunity for the particles **14**A of the ion flux **14** to vary from the direction A_1. In some cases the distance D**2** may be in a range from one (1) to twelve (12) millimeters. In this manner, the angle at which the particles **14**A of the ion flux **14** are received by the substrate **12** can be more precisely controlled.

It is noted that the substrate **12** is not biased when the particles **14**A of the ion flux **14** depart from the passageway **30**A and are received along the direction A_1 which is orthogonal to the focusing surface **26**. A voltage bias at the substrate **12** could cause a second plasma sheath to form and be disposed at the front surface **10** of the substrate **12**. This second plasma sheath would cause the particles **14**A of the ion flux **14** to change trajectory and be received orthogonal to the front surface **10** of the substrate **12** defeating the efforts of the focusing surface **26** to angle the trajectory of the particles **14**A of the ion flux at the direction A_1. Accordingly, where the substrate **12** is not biased, the second plasma sheath will not form in the interstitial gap **38** between the distribution grid **22** and the substrate **12** and thereby change the direction of the particles **14**A of the ion flux **14**. The distribution grid **22**, or the focusing surface **26**, may be electrically-conducting and may include at least one strong, plasma-resistant material, for example, silicon carbide, nanocrystalline diamond, and/or doped-silicon. In this manner, a processed substrate may be free of contamination from the distribution grid **22** and yet provide the particles **14**A of the ion flux **14** at an angled trajectory to the substrate **12**.

Now that the distribution grid **22** has been introduced an exemplary embodiment is now discussed. In this regard, FIG. **2**A is a schematic view of an embodiment of the distribution grid **22** of FIG. **1** as part of an exemplary process chamber **40** providing relative movement between at least one substrate **12**A, **12**B and the distribution grid **22**. The process chamber **40** includes enclosure walls **42** which enclose the distribution grid **22**, substrates **12**A, **12**B and substrate supports **15**A, **15**B.

The process chamber **40** includes a gas source **44** and a plasma source **46** configured to form plasma **16** from the ionizable gas provided by the gas source **44**. The resulting plasma **16** is disposed in a process volume **48** within the enclosure walls **42**. The distribution grid **22** includes focusing surfaces **26**A-**26**D and respective passageways **30**A-**30**D extending through the grid **22** generally perpendicular to the focusing surface **26** from which each extends. The plasma sheath **28** is formed on the focusing surfaces **26**A-**26**D and extends a thickness TH**2** from the focusing surfaces **26**A-**26**D. The passageways **30**A-**30**D are, as earlier described herein, sized to prevent the plasma sheath **28** from entering the passageways **30**A-**30**H. As the positive ions of the plasma **16** are accelerated by a negative bias on the focusing surfaces **26**A-**26**D and thus toward the focusing surfaces **26**A-**26**D along the direction A_1 normal to the focusing surfaces **26**A-**26**D (FIG. **1**), a portion of these ions travel through the passageways **30**A-**30**D and are received at the substrates **12**A, **12**B as ions, or radicals or neutrals derived therefrom. Actuator **50** swings the distribution grid **22** through a circular orbit at a rotational speed omega1A (ω1A) while the substrate supports **15**A, **15**B supporting the substrates **12**A, **12**B respectively may be rotated about their centers by the actuators **52**A, **52**B at respective rotational speeds omega2A, omega2B (ω2A, ω2B). The actuators **50**, **52**A, **52**B may comprise, for example, electric motors. The rotational speeds ω1A, ω2A, ω2B provide relative movement of the distribution grid **22** to the substrates **12**A, **12**B. In this manner, more uniform, anisotropic, exposure of the sidewalls **18**A, **18**B, **19**A, **19**B (FIG. **1**) may be achieved.

FIG. **2**B is a schematic of the distribution grid **22** of FIG. **2**A showing exemplary relative movement of the distribution grid **22** as planetary movement. In this case, the distribution grid **22** orbits about a shaft **27** (FIG. **2**A) in a circular arc **45** centered about shaft **27** at the rotational speed omega1a (ω1A). A location on the distribution grid **22** forming the axis of rotation R**1** of the distribution grid **22** is connected to the shaft **27** via a swing arm **29** enabling the distribution grid **22** to rotate in a planetary motion, i.e., to move in a circular orbit about an axis not centered thereon while simultaneously rotating about an axis R**1** located thereon, relative to the location of the substrates **12**A, **12**B. In this manner, an anisotropic ion flux is directed at the substrate **12** at a plurality of directions all angled from normal to the front surface **10** of the substrate **12**.

It is noted that as the distribution grid **22** is, in this embodiment, moved across the substrates **12**A, **12**B, at times the distribution grid **22** will not be present between the substrate **12** and the plasma **16** in the process volume **48**. By selectively negatively biasing the substrates **12**A, **12**B or the substrate supports **15**A, **15**B, a second plasma sheath **28**X (FIG. **2**A) will form between the plasma **16** and the substrates **12**A, **12**B, or portion of a substrate, not overlaid by the distribution grid **22**, and plasma ions will be drawn to the substrate **12** in a direction generally perpendicular to the upper surface thereof. The second plasma sheath **28**X may not form on a portion of the substrate which is overlaid by the distribution grid **22** as long as the distance D**2** of the interstitial gap **38** (FIG. **1**) between the substrates **12**A, **12**B and the first surface **24** of the distribution grid **22** is smaller than a width of the second plasma sheath **28**X formed in the portion of the substrate not overlaid by the distribution grid **22**. Hence, in a portion of the substrate not overlaid by the distribution grid **22**, a perpendicular direction of the par-

ticles **14**A of the ion flux **14** is periodically drawn to the front surface **10** of substrates **12**A, **12**B directly from the plasma **16**. In contrast, in a portion of the substrates **12**A, **12**B overlaid by the distribution grid, the particles **14**A of the ion flux **14** drawn through the distribution grid **22**, and not directed perpendicular to the front surface **10** of the substrate **12**A, **12**B, are periodically directed at the front surface of the substrate **12**A, **12**B. Accordingly, for the features **20**A, **20**B, **20**C of FIG. **1** having high aspect ratios (height/width), a period of time is provided (when overlaid by the distribution grid) when the particles **14**A of the ion flux **14** can reach the base of the feature but not materially contact and affect the feature sidewall. Moreover, another time is provided (when overlaid by the distribution grid) when the particles **14**A of the ion flux **14** are directed at the sidewalls of the feature and the particles **14**A do not reach the feature base. In this manner, an anisotropic treatment of the substrate is achieved by use of the second plasma sheath **28**X and control of the feature sidewalls are enabled using the particles **14**A of the ion flux **14** drawn through the distribution grid **22**.

FIG. **3**A through **3**D are a top perspective view, a sectional side view, a top view and a bottom view, respectively, of the distribution grid **22** of FIG. **2**A. The distribution grid **22** includes the first surface **24** and the focusing surfaces **26**A-**26**D. Normal vectors of respective planes of the focusing surfaces **26**A-**26**D are disposed at an angle theta (**0**) relative to the first surface **24**. When a bias is placed on the distribution grid **22** and the focusing surfaces **26**A-**26**D are exposed to a plasma **16**, then the plasma sheaths **28**A-**28**D (FIG. **2**A) may be respectively formed at the focusing surfaces **26**A-**26**D. In this manner, the ion flux **14** is accelerated across the plasma sheaths **28**A-**28**D in a direction orthogonal to the focusing surfaces **26**A-**26**D.

The focusing surfaces **26**A-**26**D include the entry openings **32**A-**32**D to the passageways **30**A-**30**D. The passageways **30**A-**30**D are formed by the inner surfaces **34**A-**34**D respectively connecting the first surface **24** to a corresponding focusing surface **26**A-**26**D. At least a portion of the ion flux **14**, which is accelerated towards to the focusing surfaces **26**A-**26**D across the plasma sheaths **28**A-**28**D formed at the respective focusing surfaces **26**A-**26**D, passes into the openings **32**A-**32**D and then through the passageways **30**A-**30**D. In this manner, at least a portion of the ion flux **14** is accelerated through the passageways **30**A-**30**D formed by the inner surfaces **34**A-**34**D extending through the distribution grid **22**, and thence to the substrate **12**.

It is noted that respective normal vectors of the focusing surfaces **26**A-**26**D may be disposed at angles theta_A through theta_D (θ_A-θ_D) relative to the first surface **24**. The angles theta_A through theta_D (θ_A-θ_D) may be the same or different according to the angular distribution of the particles **14**A of the ion flux **14** required for treatment of the substrate **12**.

FIG. **4** is a schematic diagram of an exemplary process chamber **40**A used for deposition including the distribution grid **22** of FIG. **2**A therein. The process chamber **40**A generally includes walls **100**, a bottom **102**, a gas distribution plate **138**, and the distribution grid **22** which define the process volume **48**. It is noted that the walls **100** and the bottom **102** may be included as part of a chamber enclosure body **106**. The process volume **48** may be accessed through a sealable slit valve **108** formed through the walls **100** such that the substrate **12**, may be transferred in and out of the process chamber **40**A therethrough. The substrate support **15** includes the substrate receiving surface **110** for supporting the substrate **12** and a stem **112** coupled to a lift system **114** to raise and lower the substrate support **15**. A shadow frame **116** may be placed over periphery of the substrate **12** during processing. Lift pins **118** are moveably disposed through the substrate support **15** to move the substrate **12** to and from the substrate receiving surface **110** to facilitate substrate transfer. The substrate support **15** may also include heating and/or cooling elements **120** to maintain the substrate support **15** and substrate **12** positioned thereon at a desired temperature. The substrate support **15** may also include grounding straps **122** at the periphery of the substrate support **15** to provide RF grounding of the substrate support **15**.

The gas distribution plate **138** is coupled to (or supported by) a backing plate **124** at its periphery by the at least one suspension member **126**. The shaft **27** (see FIGS. **2**A and **2**B) may be disposed through a center of the process chamber **40**A and an actuator **50** used to drive the shaft **27** at the rotational speed omega1a (ω1A) to orbit the distribution grid **22** about the shaft **27**. Also, the distribution grid **22** rotates about its own center (at axis of rotation R**1**) at the rotational speed omega1B (ω1B). In this manner, relative planetary movement between the distribution grid **22** and the substrate **12** is provided.

A gas source **44** is coupled to the backing plate **124** to provide gas through the backing plate **124** at an input port **130**, and then to the distribution plate **138** and to the substrate **12** through the distribution grid **22** as the particles **14**A of the ion flux **14** (FIG. **1**). A vacuum pump **132** is coupled to the process chamber **40**A to control pressure within the process volume **48** through an output port **134**. An RF power source **136** (with or without a DC bias) may be coupled to the backing plate **124** and/or to the distribution plate **138** to provide RF power to the distribution plate **138** to generate an electric field between the distribution plate **138** and the distribution grid **22** so that the plasma **16** may be formed from the gas present between the distribution plate **138** and the distribution grid **22**. Various RF frequencies may be used, such as a frequency between about 0.3 MHz and about 200 MHz. In one embodiment, the RF power source **136** may provide power to the distribution plate **138** at a frequency of 13.56 MHz. Alternatively, a DC bias may be provided to form the plasma **16**. In other embodiments, the distribution grid **22** may be electrically negative with respect to the backing plate **124** and/or distribution plate **138** when the RF power source is applied to the distribution plate **138** to generate the electric field.

The distribution grid **22** may be coupled to the backing plate **124** via the shaft **27**. The actuator **50** is configured to swing the distribution grid **22** around the center of the chamber and thus provide relative movement between the distribution grid **22** and the substrate **12**. The relative motion enabled by the shaft **27** and the axis of rotation R**1** of the distribution grid **22** as "planetary motion" is used to provide, over time or a number of rotations and orbits of the distribution grid **22** relative to the substrate **12**, an isotropic ion, radical, or neutral flux to the substrate **12**. Particles **14**A of the ion flux **14** pass through the distribution grid **22** at the angle theta which will remain constant (within the intended range thereof), but the direction thereof with respect to the axis of the distribution grid **22** will swing through an entire 360 degree arc as the distribution grid **22** is scanned over the substrate **12**. In this manner, isotropic or anisotropic deposition may be provided. Specifically, isotropic deposition may be provided as the particles **14**A of the ion flux **14** directed by the distribution grid **22** are received by the substrate **12** at the direction A_1 normal to the focusing surface **26** (and angled at a non-orthogonal angle to the substrate **12**). In contrast, anisotropic deposition may be provided by plasma formed at the portion of the substrate not

overlaid by the distribution grid **22**. The movement of the distribution grid **22** in a rotational and orbit movement may provide anisotropic deposition wherein a linear scanning movement of the distribution grid **22** may be used to achieve directed isotropic deposition on a subset of features of the substrate which are orientated to receive the particles **14**A of the ion flux **14**.

With continued reference to the embodiment depicted in FIG. **4**, isotropic processing which are formed isotropically about arcs centered at axis A**2** may be specifically provided by the distribution grid **22** by directing the particles **14**A of the ion flux **14** to the front surface **10** of the substrate **12** at the angle theta (θ) which is normal to the focusing surface **26** (and angled non-orthogonally to the front surface **10** of the substrate **12**). As the distribution grid **22** is swung through an entire 360 degree arc about an axis of rotation A**2**, the direction A_1 remains constant relative to the axis of rotation A**2** as the distribution grid **22** is fixed relative to the swing arm **29** in the embodiment of FIG. **4**. Accordingly, as the axis of rotation A**2** remains stationary relative the substrate **12** in the embodiment of FIG. **4**, the particles **14**A of the ion flux **14** are received by any one portion of the front surface **10** of the substrate **12** at the angle theta (θ) and from a single general direction providing isotropic processing of the front surface of the substrate **12**. It is noted that anisotropic processing may alternatively be added to the embodiment depicted by FIG. **4** by incorporating further relative linear or rotational movement between the grid **22** and the substrate **12**. This relative linear movement may be incorporated, for example, by linear movement of the substrate support **15** with first actuators (not shown) or linear movement of the shaft **27** with second actuators (not shown). In this manner, isotropic or anisotropic processing of the substrate **12** may be provided using the distribution grid **22**.

In one embodiment, the heating and/or cooling elements **120** may be utilized to controllably maintain a desired temperature of the substrate support **15** and the substrate **12** thereon during processing. The process chamber **40**A may be used to deposit silicon oxide (SiO_x) with silane (SiH_4) gas diluted in nitrous oxide (N_2O) by a PECVD process to generate a film widely used as a gate insulator, and as a buffer layer for heat dissipation and etch stop layers in TFT's and AMOLED's. The uniformity (i.e., thickness) of the oxide film has significant impact on the final device performance, such as mobility and drain current uniformity. A film non-uniformity of about five (5) percent, or less, across the substrate **12**, as well as minimal edge exclusion, may be desirable. While progress has been made to reduce non-uniformity, there are regions of the substrate **12** where this non-uniformity is not achieved. For example, edges of the substrate **12**, such as corner regions and sides of the substrate, may experience different deposition rates resulting in film thicknesses at these regions different than at other regions. The inclusion of the distribution grid **22** to the chamber **40**A as discussed will may improve the ability to deposit thin films on sidewalls **18**A, **18**B, **19**A, **19**B.

FIG. **5** is a flow chart diagram of an exemplary method **200** for providing the angularly directed particles **14**A of the ion flux **14** for the substrate **12** of FIG. **2**A. The method **200** will be discussed using terminology provided above and operations **202**A through **202**F of FIG. **5**.

In this regard, the method **200** includes disposing the substrate **12**, in a the process volume **48**, having the distribution grid **22** (operation **202**A of FIG. **5**), and positioning the distribution grid **22** having the electrically-conductive body **54** between the process volume **48** and the substrate **12** (operation **202**B of FIG. **5**). The distribution grid **22** includes the first surface **24** facing the substrate **12** and the focusing surface **26** facing the process volume **48**. The focusing surface **26** is angled, i.e., is not parallel to, the front surface **10** of the substrate **12**. In this manner, the distribution grid **22** may be initially positioned for directing the particles **14**A of the ion flux **14**.

The method **200** includes forming the plasma **16** in the process volume **48** to form the plasma sheath **28** extending the thickness TH**2** from the focusing surface **26** of the distribution grid **22** (operation **202**C of FIG. **5**). The method **200** includes directing the particles **14**A of the ion flux **14** in a direction perpendicular to the focusing surface **26** and through the passageway **30**A of the distribution grid **22** to the substrate **12** (operation **202**D of FIG. **5**). In this manner, the particles **14**A of the ion flux **14** are received at the substrate **12** at angles other than perpendicular to the upper surface of the substrate to enable the flux to reach sidewalls of features thereon. The method **200** also includes providing relative movement between the substrate and the distribution grid (operation **202**E of FIG. **5**). In this manner, the substrate may be isotropically or anisotropically exposed with the particles **14**A of the ion flux **14** at the sidewalls **18**A, **18**B, **19**A, **19**B of features thereon or therein. Once the substrate has been exposed to the particles **14**A of the ion flux **14**, the method **200** includes preparing for the next substrate **12** (operation **202**F of FIG. **5**)

Other embodiments of the distribution grid **22** are possible. FIGS. **6**A through **6**D are a top perspective view, a sectional side view, a top view and a bottom view, respectively, of another embodiment of a distribution grid **22'** including passageways **30'** as slots **300**A-**300**D. The slots **300**A-**300**D may enable a greater quantity of the particles **14**A of the ion flux **14** to travel through the distribution grid **22'** as the passageway is relatively larger compared to the passageways in circular form. Similarly to the distribution grid **22** of FIG. **2**A, the distribution grid **22'** includes the first surface **24**, and the at least one focusing surface **26** opposite the first surface **24**. The inner surface **34** of the distribution grid **22'** connects the focusing surfaces **26**A-**26**D with the first surface **24** and forms the passageways **30'**A-**30'**D. In this manner, a greater rate of the particles **14**A of the ion flux **14** may pass through the distribution grid **22'**.

FIGS. **7**A and **7**B are side schematic views of another embodiment of a process chamber **40**B including relative movement between a distribution grid **22"** and the substrate **12** wherein the relative movement between the substrate **12** and the distribution grid **22"** is a linear scanning movement. The process chamber **40**B is similar to the process chamber **40** of FIG. **2**A and only the differences thereof will be discussed for clarity and conciseness. The distribution grid **22"** is disposed between the process volume **48** and the substrate **12**. The distribution grid **22"** translates back and forth across the substrate **12** as moved by an actuator **400**. The actuator **400** may comprise, for example, an electric motor which is electrically isolated from the plasma **16**. FIG. **7**A depicts the distribution grid **22"** translating and approaching the substrate **12** and FIG. **7**B depicts the distribution grid **22"** finishing the scan. In this manner, an isotropic exposure of the sidewalls **18**A, **18**B with the particles **14**A of the ion flux **14** may be achieved. Additionally, by rotating the distribution grid **22** as it is scanned across the substrate **12**, it is possible to provide an anisotropic flux of ions at the substrate surface.

FIGS. **8**A through **8**D are a top perspective view, a sectional side view, a top view and a bottom view, respectively, of the distribution grid **22"** of FIGS. **7**A and **7**B. The distribution grid **22"** may include the first surface **24** and the

focusing surfaces **26**A-**26**F. The normal of the focusing surfaces **26**A-**26**F may be disposed at the angle theta (θ) relative to the first surface **24**. The inner surfaces **34**A-**34**F may connect the first surface **24** respectively to the focusing surfaces **26**A-**26**F. In this manner, the ion flux **14** may be accelerated through the passageways **30**A-**30**F formed by the inner surfaces **34**A-**34**F through the distribution grid **22"** and to the substrate **12**. In this manner, the distribution grid **22"** may also direct the particles **14**A of the ion flux **14** to the substrate **12**.

It is noted that the focusing surfaces **26**A-**26**F may be tilted relative to each other, and the passageways **30**A-**30**D may be disposed perpendicular to respective ones of the focusing surfaces **26**A-**26**D. The associated angles theta_A through theta_D (Θ_A-Θ_D) are in a range from one (1) to forty-five (45) degrees. Disposing the passageways **30**A-**30**D at different angular positions within this range may enable a wide variety of angles of different particles **14**A of the ion fluxes **14** to be received at the substrate **12**. In this manner a more uniform, exposure of the sidewalls **18**A, **18**B, **19**A, **19**B may be achieved. In addition, the aspect ratio of the passageways **30**A-**30**D through the grid can also change directionally (as they will cull more stray trajectories the longer they are for the same width).

It is further noted that the etching process discussed above may include, for example, reactive ion etching wherein components of the particles **14**A of the ion flux **14** chemically react with the front surface **10** of the substrate **12** when the particles **14**A of the ion flux **14** are received at the front surface **10**. The components of the particles **14**A of the ion flux **14** may include, for example, fluorine and chlorine reactive species (for example, CF2, CF3, and CHF) originating from gases such as: carbon tetrafluoride (CF4), sulphur hexafluoride (SF6), chlorine trifluoride (CIF3), fluoroform (CHF3), nitrogen trifluoride (NF3), bromine trifluoride (BrF3). Iodine trifluoride (IF3), chlorine (Cl2) and/or carbon tetrachloride (CCl_4). In many cases there is also a background noble gas which supplies bombardment and sputter etching as well. The reactive species of the particles **14**A of the ion flux **14** may be used to etch the front surface **10** containing silicon by forming volatile products (such as SiF4). The volatile products are then swept away by a gas flow from the front surface **10**. In this manner, the front surface **10** of the substrate **12** may be etched using the particles **14**A of the ion flux **14** directed by the distribution grid **22**.

It is further noted that the distribution grid **22** is discussed above as being compatible with ion implantation processes. In this regard, ion implantation may be used in some cases to introduce dopant ions (i.e., boron, phosphorus, arsenic, etc.) into the front surface **10** of the substrate **12** to change the electrical conductivity characteristics of the sidewalls **18**A, **18**B (FIG. **1**) at the front surface **10**. When the dopant ions as part of the ion flux **14** are accelerated by the plasma sheath **28** (FIG. **1**) orthogonal to the focusing surface **26** and through the passageway **30**A, the dopant ions are received at the front surface **10** of the substrate **12** with substantial kinetic energy. As the dopant ions may also have masses comparable to atoms (i.e., silicon) included as part of the substrate **12** at the front surface **10**, the atoms in the substrate **12** may in some cases be dislocated and the dopant ions incorporated to the substrate **12** at and/or within the front surface **10**. As the distribution grid **22** directs the ion flux **14** at the non-parallel and non-normal angle theta (**0**) relative to the front surface **10**, the dopant ions can be directed at the sidewalls **18**A, **18**B. In this manner, the composition and conductivity characteristics of the sidewalls **18**A, **18**B may be controlled.

Other examples of a distribution grid are possible. FIGS. **9**A and **9**B are a sectional view and a top perspective view of a distribution grid **22-3**, which is similar to the distribution grid **22"**, and so mainly the differences will be discussed in the interest of clarity and conciseness. The distribution grid **22-3** includes passageways **30**A-**30**F which are angled relative to each other and have passageway center axes which may have directional components that are directed in opposite directions along the longitudinal axis A**0** of the distribution grid **22-3**. When the distribution grid **22-3** is moved in a linear scanning movement along its longitudinal axis A**0** and above the substrate in the process chamber **40**, then opposite surfaces of the substrate features **20**A, **20**B may be efficiently exposed in an anisotropic manner to the particles **14**A of the ion flux **14**. In this manner, exposure of the sidewalls **18**A, **18**B, **19**A, **19**B (see FIG. **1**) may be efficiently achieved when the distribution grid **22-3** is operated in similar manner as is shown by distribution grid **22"** in FIGS. **7**A-**7**B.

In another example, FIGS. **10**A and **10**B are a sectional view and a top perspective view of a distribution grid **22-4**, which is similar to the distribution grid **22"**, and so mainly the differences will be discussed in the interest of clarity and conciseness. The distribution grid **22-4** includes passageways **30**A(**1**)-**30**A(N), **30**B(**1**)-**30**B(N), **30**C(**1**)-**30**C(N) having circular or oval cross-sections instead of the passageways **30**A-**30**F of the distribution grid **22"** having slot-shapes. The circular or oval cross-sections provide greater directional filtering of the ions and reduce angular variance of the ions that travel through the passageways **30**A(**1**)-**30**C(N) of the distribution grid **22-4** as compared to ion trajectories which may pass through elongated slots. In this manner, a more uniform, anisotropic, exposure of the sidewalls **18**A, **18**B, **19**A, **19**B may be achieved.

In another example, FIGS. **11**A and **11**B are a sectional view and a top perspective view of a distribution grid **22-5**, which is similar to the distribution grid **22-4**, and so mainly the differences will be discussed in the interest of clarity and conciseness. The distribution grid **22-5** includes groupings of passageways **30**A(**1**)-**30**F(N) which are angled relative to each other and have passageway center axes which have directional components that are directed in opposite directions along the longitudinal axis A**0** of the distribution grid **22-5**. In this manner, anisoptropic exposure of the sidewalls **18**A, **18**B, **19**A, **19**B (see FIG. **1**) may be efficiently achieved when the distribution grid **22-3** is operated in similar manner as is shown by distribution grid **22"** in FIGS. **7**A-**7**B.

Many modifications and other embodiments not set forth herein will come to mind to one skilled in the art to which the embodiments pertain having the benefit of the teachings presented in the foregoing descriptions and the associated drawings. Therefore, it is to be understood that the description and claims are not to be limited to the specific embodiments disclosed and that modifications and other embodiments are intended to be included within the scope of the appended claims. It is intended that the embodiments cover the modifications and variations of the embodiments provided they come within the scope of the appended claims and their equivalents. Although specific terms are employed herein, they are used in a generic and descriptive sense only and not for purposes of limitation.

While the foregoing is directed to embodiments of the present invention, other and further embodiments of the

invention may be devised without departing from the basic scope thereof, and the scope thereof is determined by the claims that follow.

What is claimed is:

1. A process chamber, comprising:

an enclosure having a process volume for forming plasma therein;

a substrate support having a substrate receiving surface, the substrate support disposed within the enclosure for positioning a front surface of a substrate with respect to the process volume; and

a distribution grid disposed between the process volume and the substrate support, the distribution grid including a first surface facing the substrate support and a focusing surface opposite the first surface, the focusing surface angled relative to the substrate receiving surface of the substrate support, wherein the distribution grid also includes an inner surface connecting the focusing surface with the first surface, the inner surface forming a passageway through the focusing surface and the first surface, the passageway having a center axis which is angled with respect to the substrate receiving surface of the substrate support, and wherein the distribution grid is rotatable about an axis that is offset from a center of the distribution grid.

2. The process chamber of claim **1**, further comprising a bias source or an electrical ground connected to the distribution grid.

3. The process chamber of claim **1**, wherein the distribution grid is electrically conducting.

4. The process chamber of claim **1**, wherein the first surface is offset from the front surface of the substrate by an offset distance, and the offset distance is in a range from two (2) to twelve (12) millimeters.

5. The process chamber of claim **1**, wherein an angle between a normal of the focusing surface and a normal of a geometric plane of the substrate front surface is in a range from one (1) to forty-five (45) degrees.

6. The process chamber of claim **1**, wherein the distribution grid comprises at least one of: silicon carbide, doped silicon and nanocrystalline diamond.

7. The process chamber of claim **1**, wherein the process chamber is configured to move the distribution grid in a planetary motion above the substrate support.

8. The process chamber of claim **1**, wherein the distribution grid includes a plurality of focusing surfaces, each focusing surface angled relative to the substrate receiving surface of the substrate support, wherein a passageway connects each focusing surface of the plurality of focusing surfaces to the first surface, each passageway extending through the first surface and through one of the focusing surfaces and each passageway angled with respect to the substrate receiving surface.

9. The process chamber of claim **1**, wherein the first surface is parallel to the substrate support.

10. The process chamber of claim **1**, further comprising a shaft and an arm, the arm connecting the shaft to the distribution grid, wherein the shaft is rotatable about a central axis that is offset from the center of the distribution grid.

11. The process chamber of claim **10**, wherein the process chamber is further configured to rotate the distribution grid about a central axis of the distribution grid.

12. The process chamber of claim **10**, wherein the arm is configured to rotate the distribution grid around a path, the path including a first position and a second position, wherein a normal from the substrate receiving surface of the substrate support intersects the distribution grid at the first position and does not intersect the distribution grid at the second position.

13. A method, comprising:

disposing a substrate, process volume, and distribution grid within an enclosure;

positioning the distribution grid having an electrically conductive body between the process volume and the substrate, wherein the distribution grid includes a first surface facing the substrate and an opposing focusing surface facing the process volume, wherein the focusing surface is angled relative to a front surface of the substrate;

forming a plasma in the process volume, the plasma including a plasma sheath extending a thickness from the focusing surface of the distribution grid;

directing an ion flux in a direction perpendicular to the focusing surface such that the ion flux is accelerated across the plasma sheath and particles of the ion flux enter and pass through passageways of the distribution grid from the focusing surface to the first surface in an angled direction towards the substrate; and

rotating the distribution grid about an axis that is offset from a center of the distribution grid.

14. The method of claim **13**, wherein directing the ion flux comprises applying an electric ground to the distribution grid.

15. The method of claim **13**, wherein the thickness of the plasma sheath extending from the focusing surface is greater than a width of the passageway.

16. The method of claim **13**, further comprising moving the distribution grid in a planetary motion above the substrate.

17. The method of claim **13**, further comprising rotating the distribution grid around a path above the substrate from a first position to a second position, wherein a normal line from a front surface of the substrate intersects the distribution grid in the first position and does not intersect the distribution grid in the second position.

18. A distribution grid assembly for a process chamber, comprising:

a distribution grid comprising an electrically conductive body having a center, the electrically conductive body including a first surface and a plurality of focusing surfaces opposite the first surface, wherein

the first surface is configured to face a front surface of a substrate;

each focusing surface is angled relative to the first surface;

each focusing surface is located at a different distance from the center of the electrically conductive body; and

an inner surface connects each focusing surface with the first surface, wherein each inner surface forms a passageway through the first surface and through one of the focusing surfaces, each passageway having a center axis disposed at an angle other than perpendicular to the first surface; and

a shaft coupled to the distribution grid, wherein the shaft is rotatable to rotate the distribution grid about a central axis that is offset from a center of the distribution grid.

19. The distribution grid of claim **18**, wherein each focusing surface surrounds the center of the electrically conducting body.

20. The distribution grid of claim **18**, wherein the plurality of focusing surfaces includes four or more focusing surfaces.

* * * * *